CONTRACT NO. 64602

F.A.I. RTE.	SECTION	COUNTY	TOTAL SHEETS	SHEET NO.
80	37-1HBR-1	HENRY	133	92
STA.		TO STA.		
FED. ROAD DIST. NO.	ILLINOIS	FED. AID PROJECT		

TYPICAL PAVEMENT MARKINGS

TYPICAL PAVEMENT MARKING FOR FLUSH MEDIAN AT LEFT TURN LANE

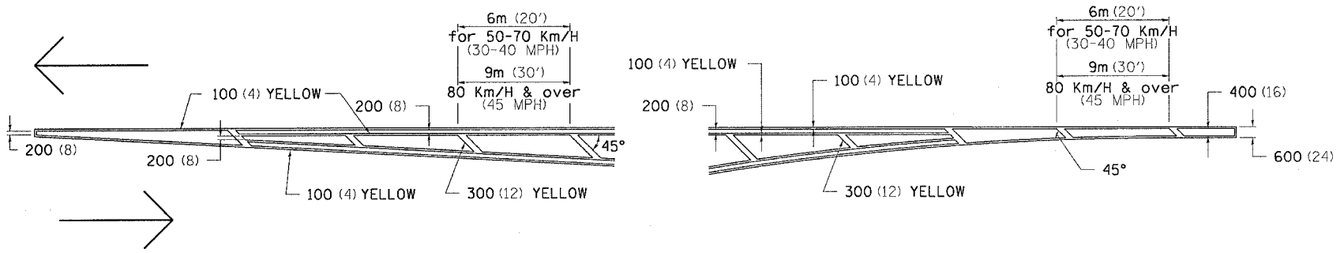

MEDIAN PAVEMENT MARKING

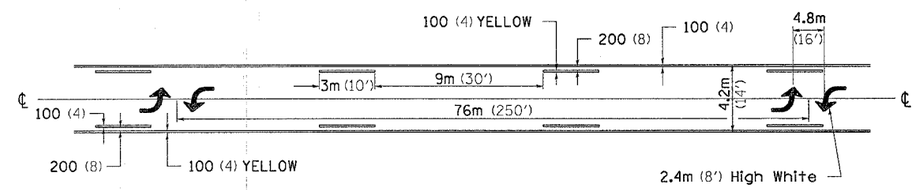

TYPICAL ISLAND OFFSET SHOULDER WIDTH

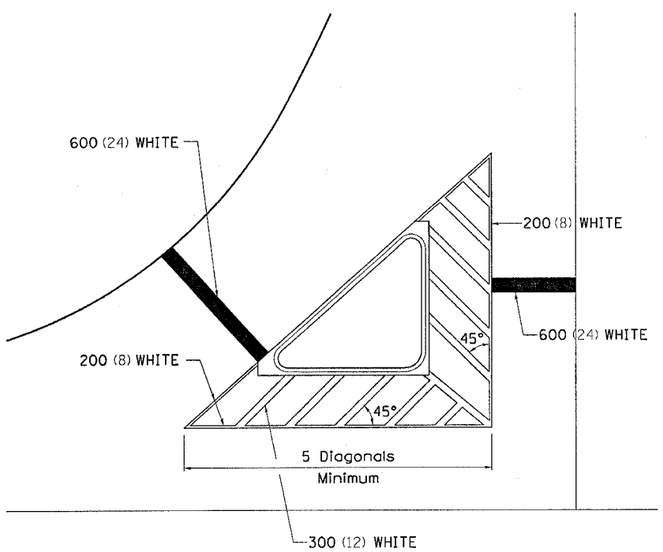

TYPICAL PARKING SPACING

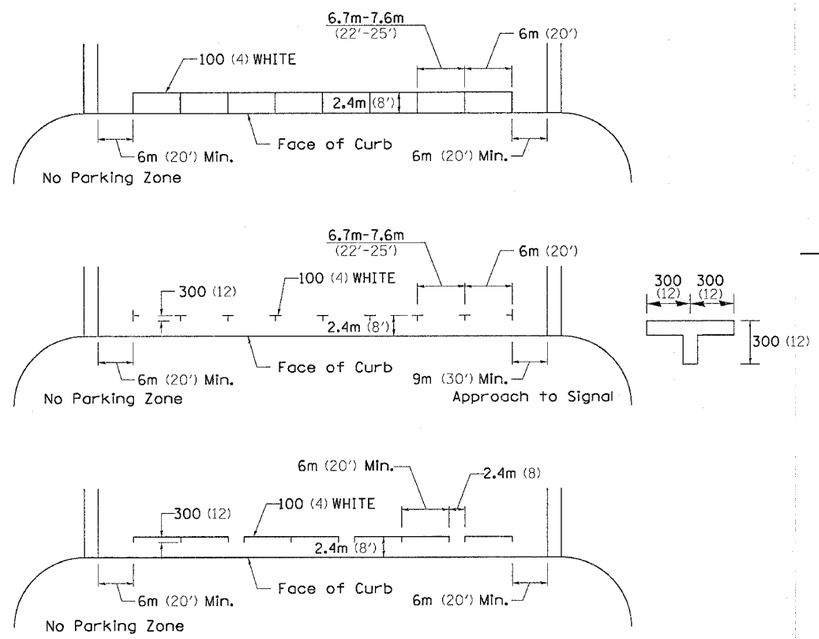

•• ALL DIMENSIONS ARE IN MILLIMETERS (INCHES) UNLESS OTHERWISE NOTED.

STANDARD CROSSWALK MARKING

See Schedules for Locations

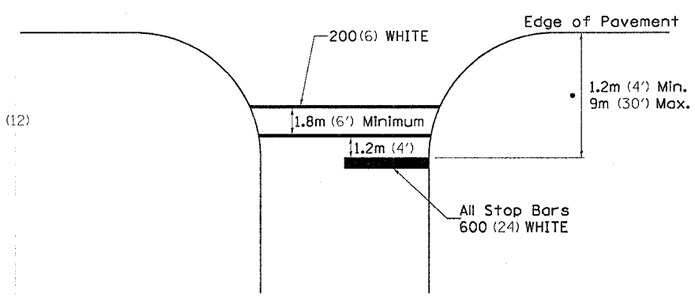

• Distance to the nearest edge of the intersecting roadway in the absence of a marked crosswalk.

PLOT DATE = Fri Sep 01 10:16:09 2006
FILE NAME = c:\projects\b213100\d313100ph1.dgn
PLOTTED BY = Bureau / PM
REFERENCE = REF

REVISED 7-20-06