CONTRACT NO. 64602

F.A.I. RTE.	SECTION	COUNTY	TOTAL SHEETS	SHEET NO.
80	37-1HBR-1	HENRY	133	96
STA.		TO STA.		
FED. ROAD DIST. NO.	ILLINOIS	FED. AID PROJECT		

WITNESS MARKER FOR PERMANENT SURVEY MARKERS, TYPE II

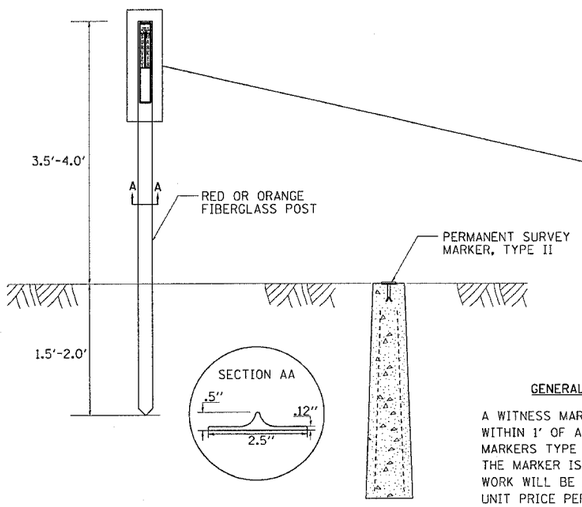

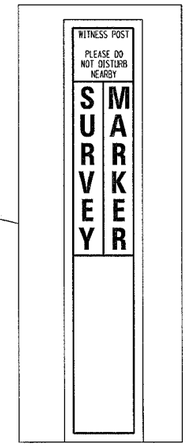

GENERAL NOTES

A WITNESS MARKER SHALL BE INSTALLED WITHIN 1' OF ALL PERMANENT SURVEY MARKERS TYPE II EXCEPT IN AREAS WHERE THE MARKER IS IN THE SIDEWALK. THIS WORK WILL BE INCLUDED TO THE CONTRACT UNIT PRICE PER EACH FOR PERMANENT SURVEY MARKERS, TYPE II.

PERMANENT SURVEY MARKERS, TYPE II

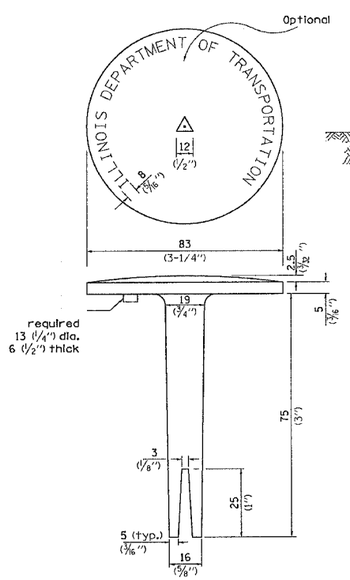

BRASS OR ALUMINUM TABLET

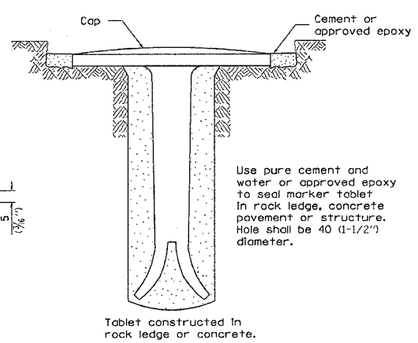

TYPE II

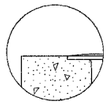

DETAIL A

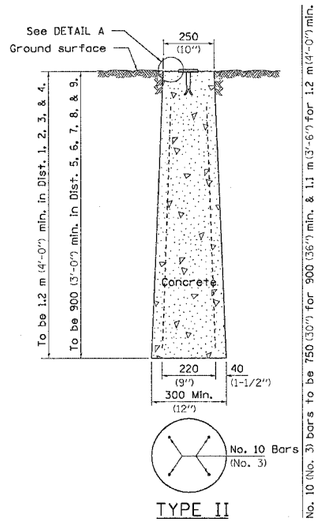

TYPE II

CAST-IN-PLACE MARKER

ALL DIMENSIONS ARE IN MILLIMETERS (INCHES) UNLESS OTHERWISE NOTED.

PRECAST REINFORCED CONCRETE ARCH DIAMETER FLARED END SECTION

SIZE	WALL	SPAN	RISE	L	B	C	E	A	SLOPE	R-1	R-2	R-3	R-4	R-5
450 (18)	64 (2 1/2)	559 (22)	343 (13 1/2)	1829 (72)	686 (27)	1143 (45)	914 (36)	178 (7)	1:2.16	699 (27 1/2)	349 (13 3/4)	133 (5 1/4)	51 (2)	305 (12)
600 (24)	76 (3)	724 (28 1/2)	457 (18)	1829 (72)	991 (39)	838 (33)	1219 (48)	203 (8)	1:2.29	1033 (40 11/16)	370 (14 9/16)	117 (4 11/32)	76 (3)	356 (14)
750 (30)	89 (3 1/2)	921 (36 1/4)	572 (22 1/2)	1829 (72)	1219 (48)	610 (24)	1524 (60)	254 (10)	1:2.34	1295 (51)	476 (18 3/4)	156 (6 1/8)	76 (3)	381 (15)
900 (36)	102 (4)	1111 (43 3/4)	676 (26 5/8)	2438 (96)	1524 (60)	914 (36)	1828 (72)	270 (10 5/8)	1:2.4	1575 (62)	572 (22 1/2)	165 (6 1/2)	152 (6)	508 (20)
1050 (42)	114 (4 1/2)	1308 (51 1/8)	795 (31 5/16)	2438 (96)	1524 (60)	914 (36)	1981 (78)	402 (15 11/16)	1:2.35	1854 (73)	667 (26 1/4)	197 (7 3/4)	152 (6)	559 (22)
1200 (48)	127 (5)	1485 (58 1/2)	914 (36)	2438 (96)	1524 (60)	914 (36)	2134 (84)	533 (21)	1:2.31	2134 (84)	762 (30)	225 (8 7/8)	152 (6)	559 (22)
1350 (54)	140 (5 1/2)	1651 (65)	1016 (40)	2438 (96)	1524 (60)	914 (36)	2286 (90)	648 (25 1/2)	1:2.26	2350 (92 1/2)	848 (33 3/8)	254 (10)	152 (6)	610 (24)
1500 (60)	152 (6)	1854 (73)	1143 (45)	2438 (96)	1905 (75)	533 (21)	2438 (96)	660 (26)	1:2.34	2667 (105)	953 (37 1/2)	281 (11 1/16)	152 (6)	533 (21)
1800 (72)	178 (7)	2235 (88)	1371 (54)	2540 (100)	1981 (78)	559 (22)	3048 (120)	889 (35)	1:2.29	3200 (126)	1143 (45)	338 (13 5/16)	152 (6)	610 (24)

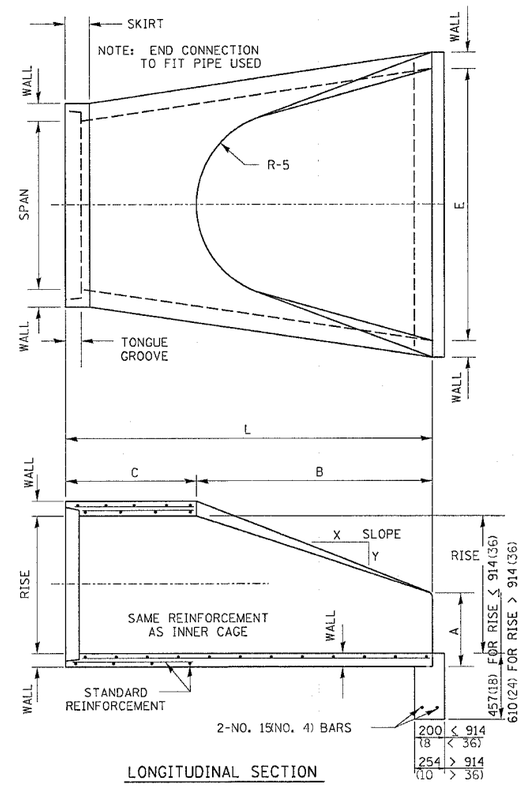

LONGITUDINAL SECTION

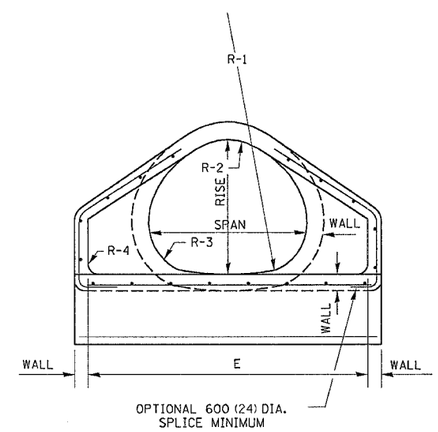

END VIEW

NOTES:

PRECAST CONCRETE FLARED END SECTIONS SHALL CONFORM TO THE APPLICABLE REQUIREMENT OF AASHTO M-206.

PRECAST CONCRETE FLARED END SECTION FOR PIPE ARCH DIAMETER REQUIRED SHALL BE AS INDICATED ON DETAIL PLAN FOR EACH INDIVIDUAL INSTALLATION.

THE END BLOCK SHALL BE PLACED PRIOR TO THE INSTALLATION OF THE FLARED END SECTION. THE END BLOCK SHALL BE BACKFILLED IN ACCORDANCE WITH ART. 502.10 (502.11) OF THE STANDARD SPECIFICATIONS, COST INCIDENTAL TO END SECTION.

ALL DIMENSIONS ARE IN MILLIMETERS (INCHES) UNLESS OTHERWISE NOTED.

PLOT DATE = Fri Sep 01 10:15:18 2006
FILE NAME = c:\pwworking\district6\d1326ap1.dgn
PLOT SCALE = 50.0000 ' / IN.
REFERENCE = REF