CONTRACT NO. 72903

F.A.P. RTE.	SECTION	COUNTY	TOTAL SHEETS	SHEET NO.
685	113B-2	HANCOCK	45	13
STA. 246+00		TO STA. 252+00		
FED. ROAD DIST. NO.	ILLINOIS	FED. AID PROJECT		

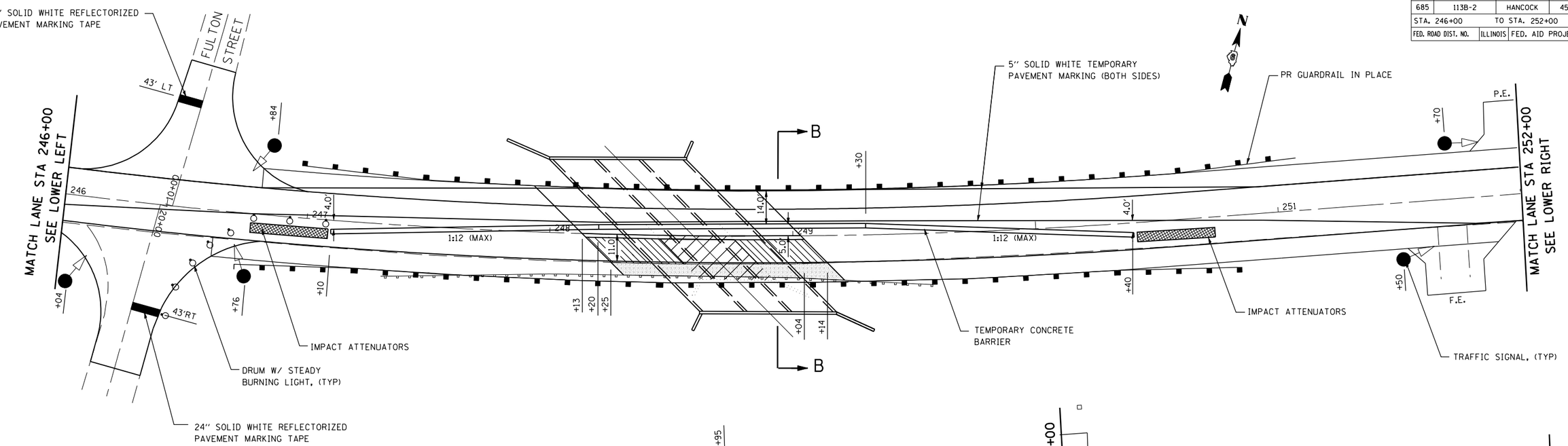

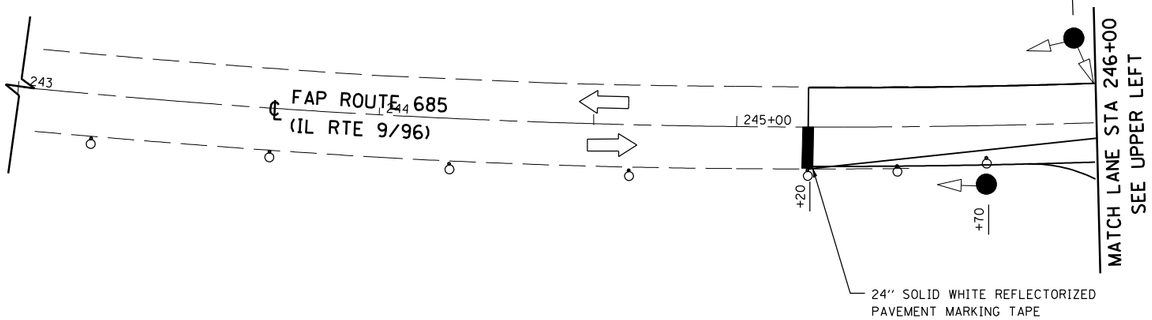

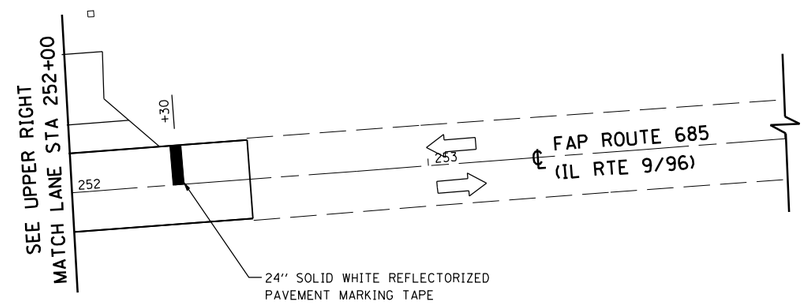

STAGE 2

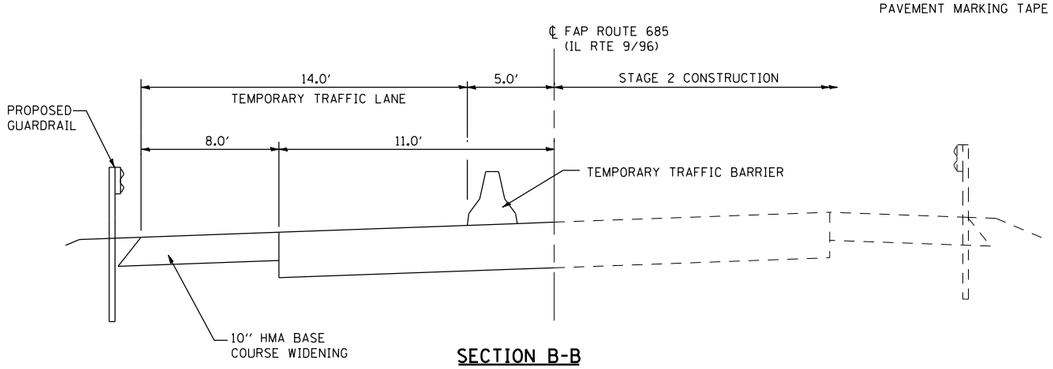

SECTION B-B

NOTES

1. A WING BARRICADE, STANDARD 7020001 SHALL BE USED TO SUPPORT THE "SIGNAL AHEAD" SIGNS. TWO HIGH INTENSITY FLASHING LIGHTS PER BARRICADE SHALL BE INSTALLED INSTEAD OF TYPE A FLASHING LIGHTS.
2. THE CONTRACTOR SHALL PROVIDE AND ERECT A W12-1102, 48x48(0) LANE WIDTH SIGNS. THESE SHALL BE PLACED AS DIRECTED BY ENGINEER.
3. REMOVE EXISTING CONFLICTING PAV'T MARKING.

STAGE 2 CONSTRUCTION SEQUENCE

1. REMOVE REMAINDER OF EXISTING BRIDGE, CONSTRUCT REMAINDER OF BOX CULVERT (INCLUDING EARTHWORK, RIPRAP AND SEEDING).
2. CONSTRUCT GRANULAR CULVERT BACKFILL AND HMA BASE COURSE, 10" OVER BOX CULVERT.
3. CONSTRUCT REMAINDER OF 10" HMA BASE COURSE/WIDENING TO 8 FT. WIDE STA 247+67 TO STA 249+28 AND CONSTRUCT GUARDRAIL STA 246+71.5 TO STA 250+84
4. REMOVE STANDARD 701321 USING STANDARD 701201 AND 701301.
5. CONSTRUCT LEVELING BINDER, SURFACE COURSE, HMA SHOULDER, SIDEROAD AND ENTRANCE IMPROVEMENTS AND AGGREGATE SHOULDER USING STANDARDS 701011 AND 701306.

LEGEND

- PAVED SHOULDER REMOVAL
- PAVEMENT REMOVAL
- BRIDGE REMOVAL
- IMPACT ATTENUATOR, TEMPORARY (FULLY REDIRECTIVE, NARROW) TEST LEVEL 3

REVISIONS	
NAME	DATE

ILLINOIS DEPARTMENT OF TRANSPORTATION

STAGE 2 CONSTRUCTION PLAN
IL 9/96 OVER OPPOSUM CREEK
FAP 685 SECTION 113B-2
HANCOCK COUNTY

SCALE VERT. HORIZ. 1"=20' DRAWN BY SJF
DATE $DATE CHECKED BY MJS

The Upchurch Group
HILLSIDE, IL. (708) 449-2321
MATTOON, IL. (217) 235-3177

TUG PROJ. 61032007-1
PLOT DATE 14-Aug-22-2007 11:14:
FILE NAME = $FILE$