CONTRACT NO. 72903

F.A.P. RTE.	SECTION	COUNTY	TOTAL SHEETS	SHEET NO.
685	113B-2	HANCOCK	45	29
STA.		TO STA.		
FED. ROAD DIST. NO.	ILLINOIS	FED. AID PROJECT		

Sheet 3 of 8 Sheets

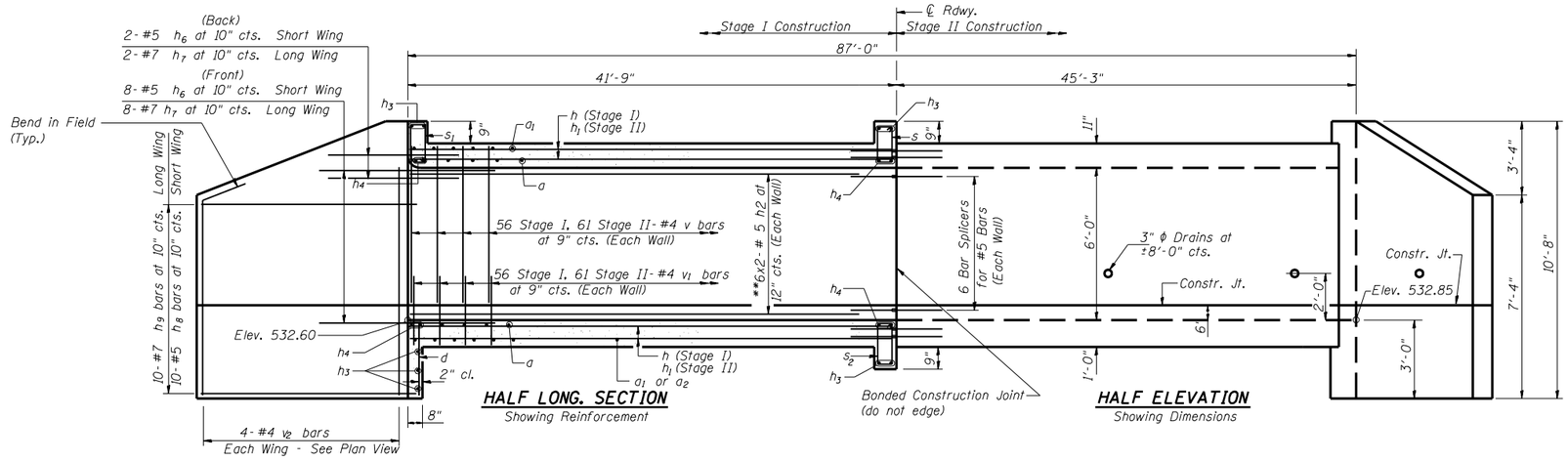

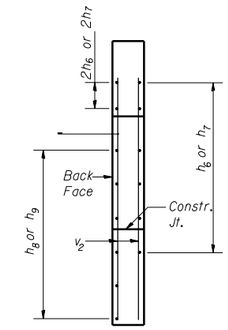

SECTION A-A

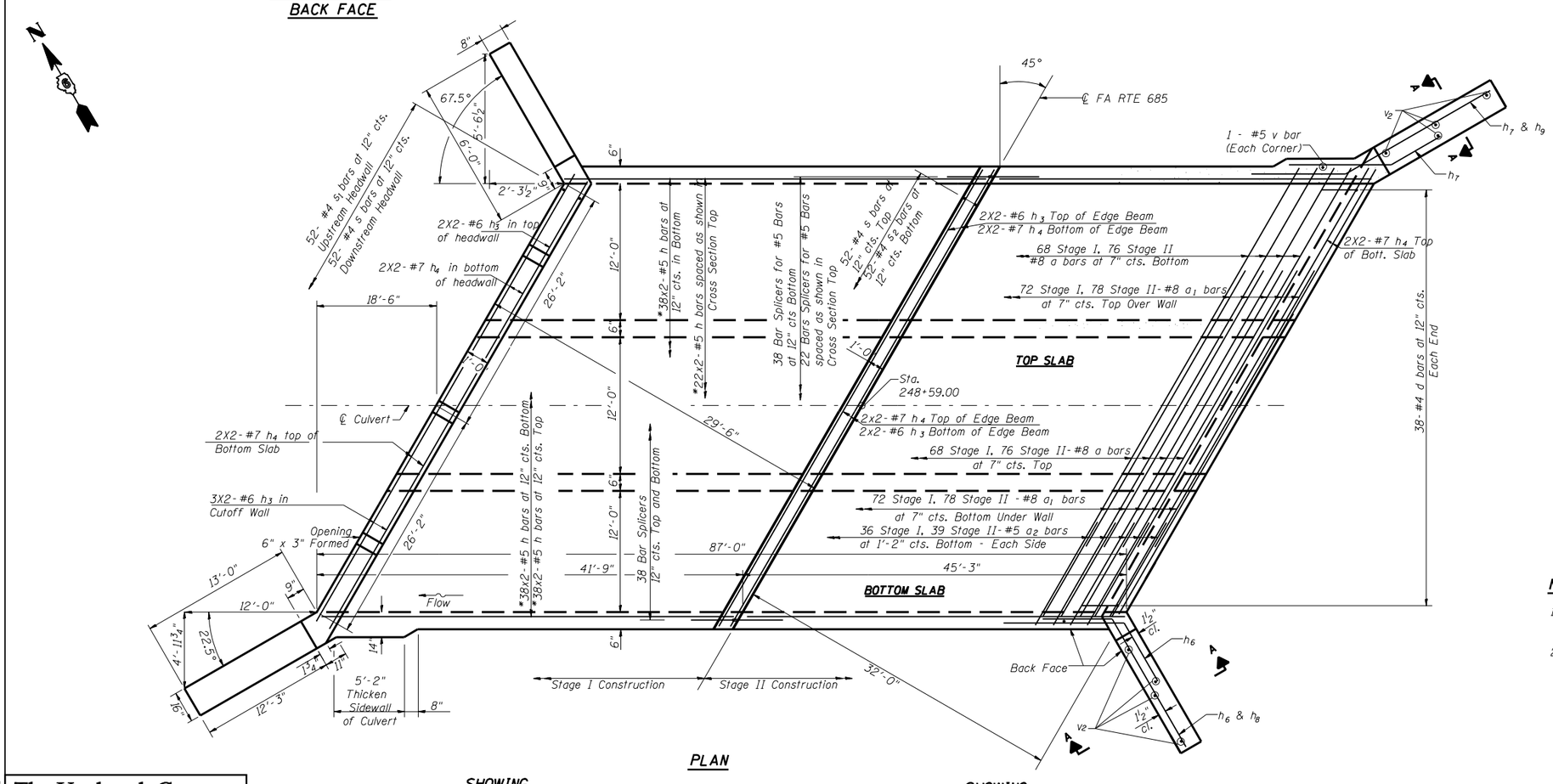

* Stage I h bars shown, use h_1 bars in Stage II

**Stage I h_2 bars shown, use h_5 bars in Stage II

BAR	MIN. LAP SPLICE LENGTH
#5	2'-2"
#6	2'-7"
#7	3'-5"

NOTES:

1. Bars indicated thus 38x2-#5 etc. indicates 38 lines of bars with 2 lengths per line.
2. At least seven feet of the barrel shall be poured monolithically with the wingwalls.

REVISIONS	
NAME	DATE

ILLINOIS DEPARTMENT OF TRANSPORTATION

CULVERT PLAN & ELEVATION
IL 9/96 OVER OPPOSUM CREEK
FAP 685 SECTION 113B-2
HANCOCK COUNTY
STA. 248+59.00 STR. No. 034-2519

SCALE: N.T.S. DRAWN BY LP
DATE: $DATE CHECKED BY

The Upchurch Group
HILLSIDE, IL. (708) 449-2321
MATTOON, IL. (217) 235-3177