ROUTE NO.	SECTION	COUNTY	TOTAL SHEETS	SHEET NO.
749	(122BR) BR	COLES	49	25
FED. ROAD DIST. NO.		ILLINOIS	FED. AID PROJECT-	

SHEET NO. 12
24 SHEETS

Contract #74146

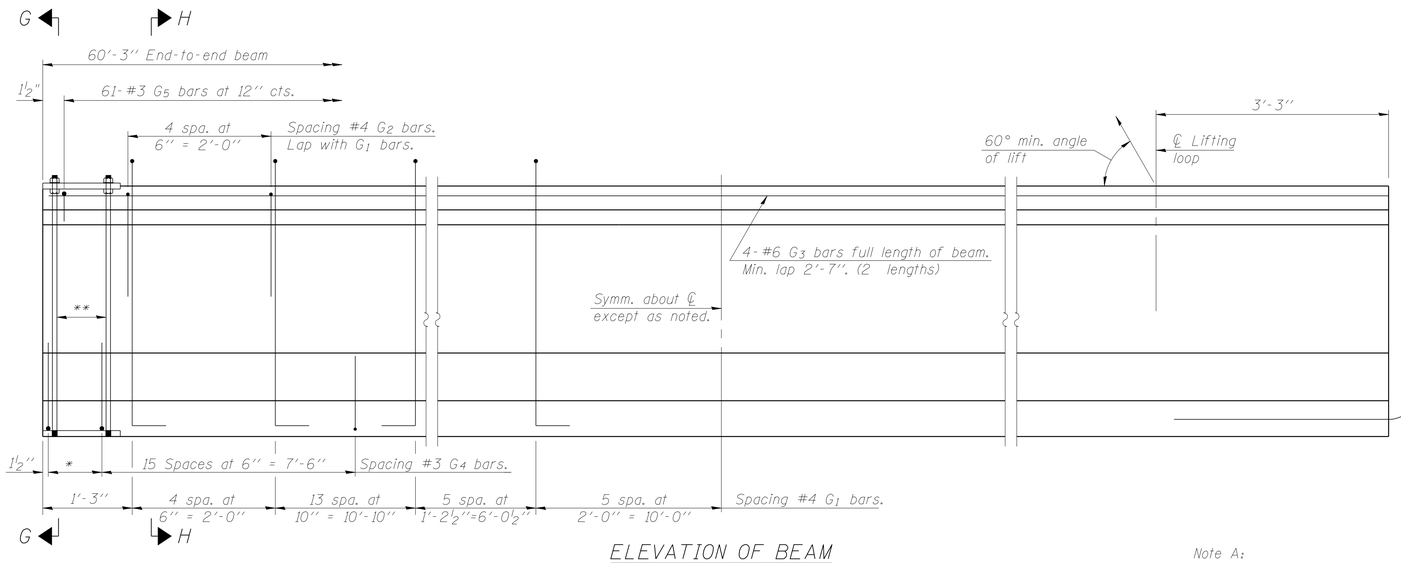

* 3 spaces at 3" = 9".
** 4-¾" ϕ threaded dowel rods at 3" cts., each face.

ELEVATION OF BEAM
(Showing reinforcement & dimensions)

2-#8 G6 bars at piers only. (See sheets 9 and 15 of 24 for details).

Note A:
Hex nuts (top and bottom) with lock washers (top). Only tighten sufficiently to compress lock washers.

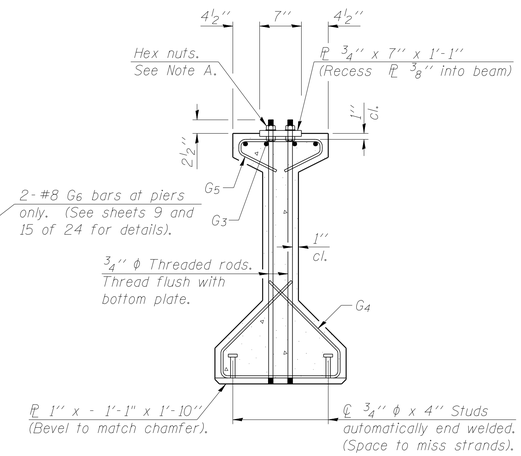

SECTION G-G

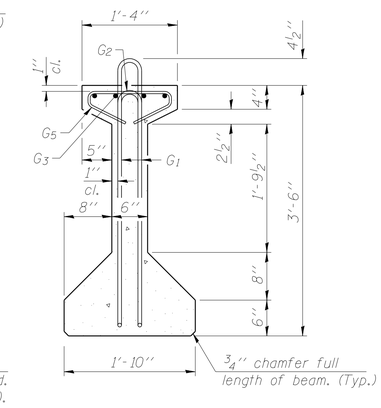

SECTION H-H

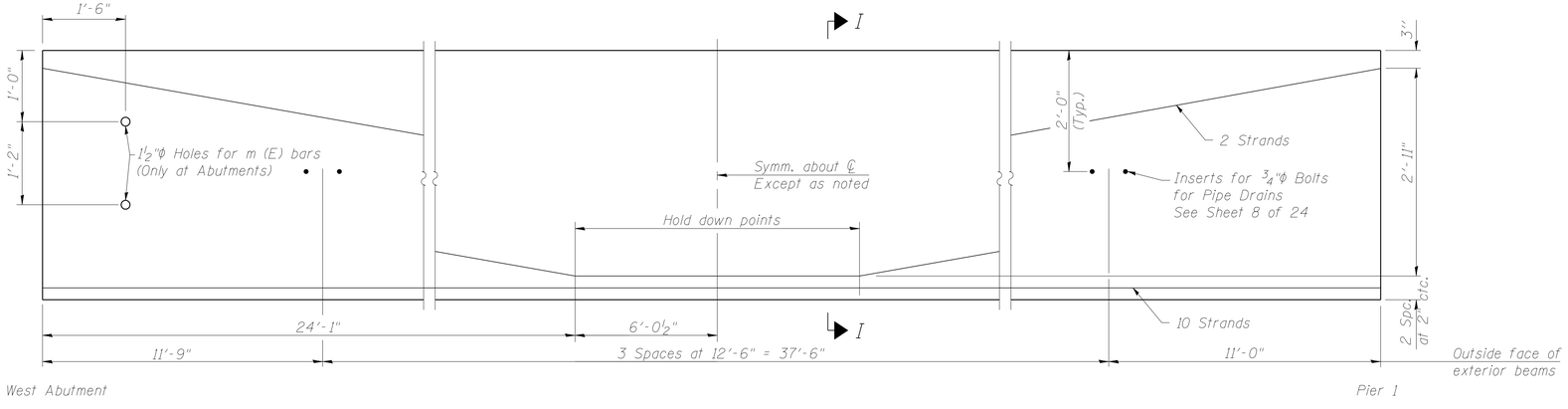

ELEVATION OF BEAM
(Showing prestressing steel and inserts)

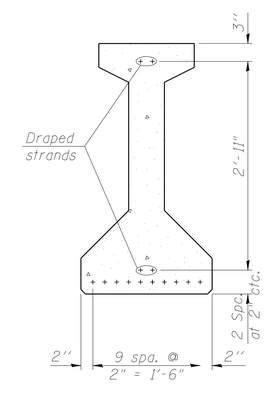

SECTION I-I

BAR LIST
ONE BEAM ONLY

Bar	No.	Size	Length	Shape
G_1	55	#4	8'-5"	
G_2	55	#4	4'-4"	
G_3	8	#6	31'-3"	
G_4	38	#3	4'-11"	
G_5	61	#3	2'-6"	
G_6	2	#8	3'-9"	

NOTES:

See sheet 15 of 24 for additional details, notes and Bill of Material.

Required release strength, f'ci, shall be 5,000 psi.

ILLINOIS DEPARTMENT OF TRANSPORTATION

42" PPC I-BEAM SPAN 1

IL ROUTE 133 OVER THE
LITTLE EMBARRAS RIVER
F.A.P. ROUTE 749 SECTION (122BR)BR
COLES COUNTY
STATION 933+50.00
STRUCTURE NO. 015-0074

DATE: MARCH 2006

DRAWN BY: MLO
CHECKED BY: PBB

PI-4-42 7-15-05

BLANK, WESSELINK, COOK & ASSOCIATES ENGINEERS - CONSULTANTS DECATUR, ILLINOIS