ROUTE NO.	SECTION	COUNTY	TOTAL SHEETS	SHEET NO.
C.H. 5	04-00163 -00-BR	STEPHENSON	29	15
		ILLINOIS		

Sheet 10 of 20 CONTRACT NO. 85391

EXTERIOR BEAM MOMENT TABLE				
		0.4 Span 1 or 0.6 Span 3	Pier 1 or Pier 2	0.5 Span 2
Is	(in^4)	2,700	2,700	2,700
Ic (n)	(in^4)	8,159	——	8,159
Ic (3n)	(in^4)	6,002	——	6,002
Ss	(in^3)	222	222	222
Sc (n)	(in^3)	347	——	347
Sc (3n)	(in^3)	312	——	312
wℓ	(k/ft.)	0.940	1.180	0.940
Mℓ	('k)	154	322	129
sℓ	(k/ft.)	0.240	——	0.240
Msℓ	('k)	44	——	45
Mℓ	('k)	307	163	327
M (Imp)	('k)	88	46	89
$\frac{5}{3}$[Mℓ+M(Imp)]	('k)	658	348	693
Ma	('k)	1,113	871	1,127
* Mu	('k)	1,445	——	1,445
fsℓ non-comp	(k.s.i.)	8.3	17.4	7.0
fsℓ (comp)	(k.s.i.)	1.7	——	1.7
fs$\frac{5}{3}$(ℓ+Imp)	(k.s.i.)	22.8	18.8	24.0
fs (Overload)	(k.s.i.)	32.8	36.2	32.7
** fs (Total)	(k.s.i.)	——	47.1	——
VR	(k)	47.8	——	45.3

*Compact Braced Section
**Non-Compact Section

EXTERIOR BEAM REACTION TABLE			
		Abutment	Pier
Rℓ	(k)	21.6	69.2
Rℓ	(k)	34.0	40.5
Imp.	(k)	9.8	11.4
R (Total)	(k)	65.4	121.1

Is and Ss are the moment of inertia and section modulus of the steel section used in computing fs (Total & Overload).

$Ic_{(n)}$ and $Sc_{(n)}$ are the moment of inertia and section modulus of the composite section used in computing stresses due to Live Load.

$Ic_{(3n)}$ and $Sc_{(3n)}$ are the moment of inertia and section modulus of the composite section used in computing stresses due to superimposed dead loads.

VR is the maximum Live Load + Impact shear range in the composite portion of the span.

Ma (Applied Moment)=$1.3[M\ell + Ms\ell + \frac{5}{3}(M\ell + M_{imp})]$.

The plastic moment capacity (Mu) is computed according to AASHTO 10.48.1 and 10.50.1.1

fs (Overload) is the sum of the stresses due to $M\ell + Ms\ell + \frac{5}{3}(M\ell + M_{imp})$.

fs (Total) (Non-compact section) is the sum of the stresses due to $1.3[M\ell + Ms\ell + \frac{5}{3}(M\ell + M_{imp})]$.

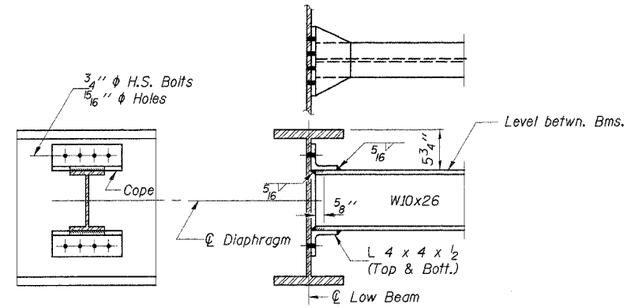

DIAPHRAGM D

24 Required

Note:
Two hardened washers shall be required over all oversize holes for diaphragms.

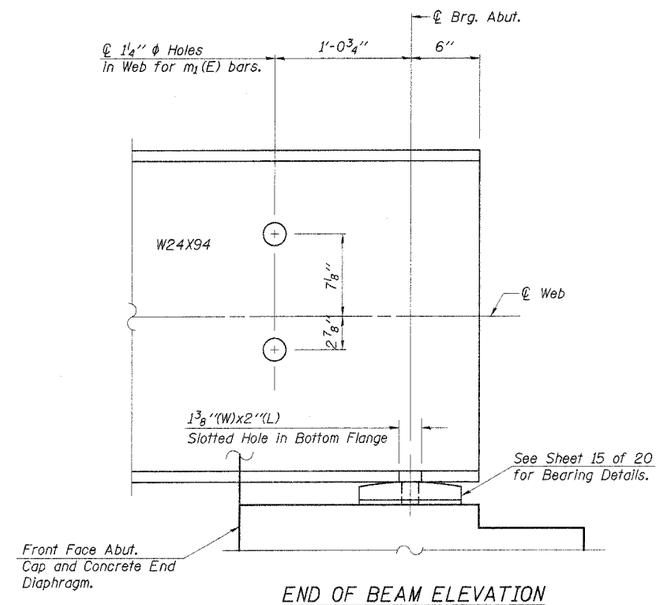

END OF BEAM ELEVATION

(Typical)

Work this Sheet with Sheets 9 & 11 of 20

DESIGNED	A.R.K.
CHECKED	S.F.M. & F.J.S.
DRAWN	S.A.P.
CHECKED	A.R.K. & F.J.S.

I-2-D 2-26-93

STRUCTURAL STEEL

SECTION 04-00163-00-BR
F.A.S. ROUTE 60 - C.H. 5
STEPHENSON COUNTY
STATION 255+30

4440 ASH GROVE
SPRINGFIELD, IL 62711
(217) 793-8600
ossinc@insightbb.com

OZYURT AND STONE, INC.
CONSULTING ENGINEERS

JOB NO.: 0527
FILE: 0527STEEL2.DGN
DATE: 03/07/06