CONTRACT NO. 88939

| F.A.P. RTE. | SECTION | COUNTY | TOTAL SHEETS | SHEET NO. |
|---|---|---|---|---|
| 310 | (41-A)BR | McDONOUGH | 58 | 15 |
| STA. | | TO STA. | | |
| FED. ROAD DIST. NO. | ILLINOIS | FED. AID PROJECT | | |

| SEQUENCE OF OPERATIONS | | | | | | | | |
|---|---|---|---|---|---|---|---|---|
| PHASE | A | | | B | | | P/B | |
| INTERVAL | 1 | 2 | 3 | 4 | 5 | 6 | 1 | 2 |
| NORTHBOUND | G | Y | R | R | R | R | R | R |
| SOUTHBOUND | R | R | R | G | Y | R | R | R |
| ENTRANCE | R | R | R | R | R | R | G | R |

NOTE: PUSH BUTTON PHASE 1 STARTS AT THE END OF EITHER PHASE 3 OR PHASE 6.

## MAINTENANCE OF TRAFFIC - STAGE I

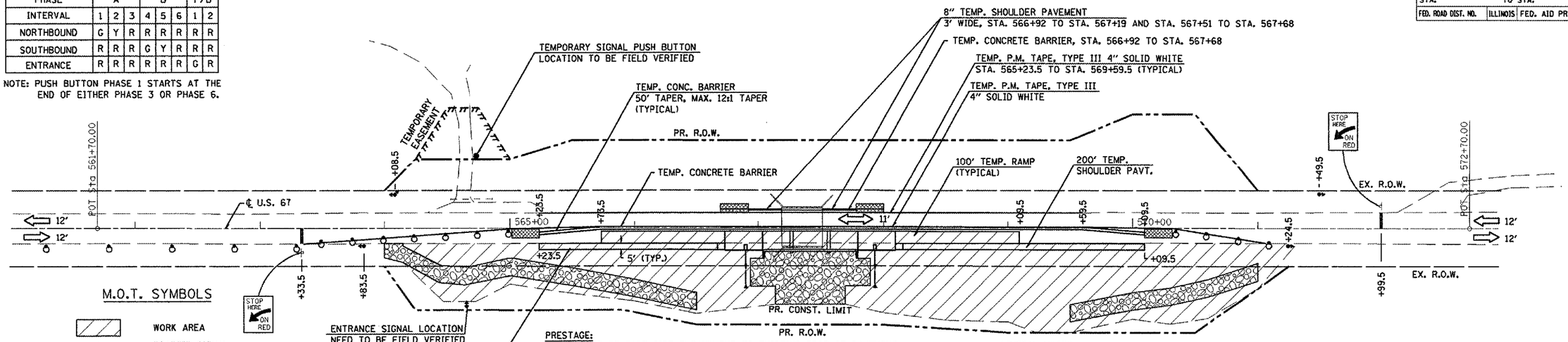


### M.O.T. SYMBOLS

- WORK AREA
- TRAFFIC SIGNAL
- IMPACT ATTENUATOR, NARROW
- IMPACT ATTENUATOR
- DIRECTION OF TRAFFIC
- STOP BAR
- DRUM WITH STEADY BURNING LIGHT
- SIGN
- PUSH BUTTON FOR ENTRANCE SIGNAL

20' 0 20' 40'
SCALE: 1" = 40'

PRESTAGE:
1. ROUGH GRADE EAST SIDE EMBANKMENT TO EXISTING EDGE OF PAVEMENT.
2. CONSTRUCT TEMPORARY SHOULDER ON THE LEFT SIDE AND INSTALL TEMPORARY IMPACT ATTENUATOR AND TEMPORARY CONCRETE BARRIER IN ACCORDANCE WITH STANDARD 701201 AND/OR 701326 OR OTHERWISE AS DIRECTED BY THE ENGINEER.

STAGE I CONSTRUCTION:
1. CLOSE WEST HALF OF U.S. 67 AS SHOWN IN ACCORDANCE WITH STANDARD 701321.
2. REMOVE WEST HALF OF EXISTING U.S. 67 PAVEMENT AND WEST HALF OF EX. STRUCTURE.
3. ROUGH GRADE WEST SIDE EMBANKMENT AND FINISH WEST SIDE DITCHES. CONSTRUCT WEST HALF OF THE PROPOSED BRIDGE AND DRAINAGE ITEMS. CONSTRUCT TEMPORARY RAMP AND TEMPORARY SHOULDER PAVEMENT.
4. APPLY EROSION CONTROLS ON THE WEST SIDE.
5. INSTALL WEST SIDE STEEL PLATE BEAM GUARDRAIL TO FINISH GRADE LINE.

GENERAL NOTES:
1. STAGE 1 AND STAGE II MAINTENANCE OF TRAFFIC SHALL BE IN ACCORDANCE WITH HIGHWAY STD. 701321 (DETAILS NOT SHOWN) AND AS DIRECTED BY THE ENGINEER.
2. PRESTAGE AND STAGE III MAINTENANCE OF TRAFFIC (EXCEPT FOR PERMANENT P.M. INSTALLATION) SHALL BE IN ACCORDANCE WITH HIGHWAY STD. 701201 AND/OR STD. 701326 AND AS DIRECTED BY THE ENGINEER.
3. ACCESS TO PRIVATE PROPERTIES SHALL BE MAINTAINED AT ALL TIMES.
4. SHORT TIME OPERATIONS SHALL BE IN ACCORDANCE WITH HIGHWAY STD. 701301 OR OTHERWISE AS DIRECTED BY THE ENGINEER.
5. PUSH BUTTON AND SIGNAL HEAD FOR ENTRANCE WILL BE INSTALLED AT LOCATIONS AS DIRECTED BY THE ENGINEER.
6. SEE BRIDGE STAGE CONSTRUCTION DETAILS SHEET FOR CROSS SECTION VIEW OF U.S. 67 STAGE CONSTRUCTION.
7. FIRST TWO WARNING SIGNS IN EACH DIRECTION SHALL HAVE FLASHING MONODIRECTIONAL LIGHTS INSTALLED.

## MAINTENANCE OF TRAFFIC - STAGE 2

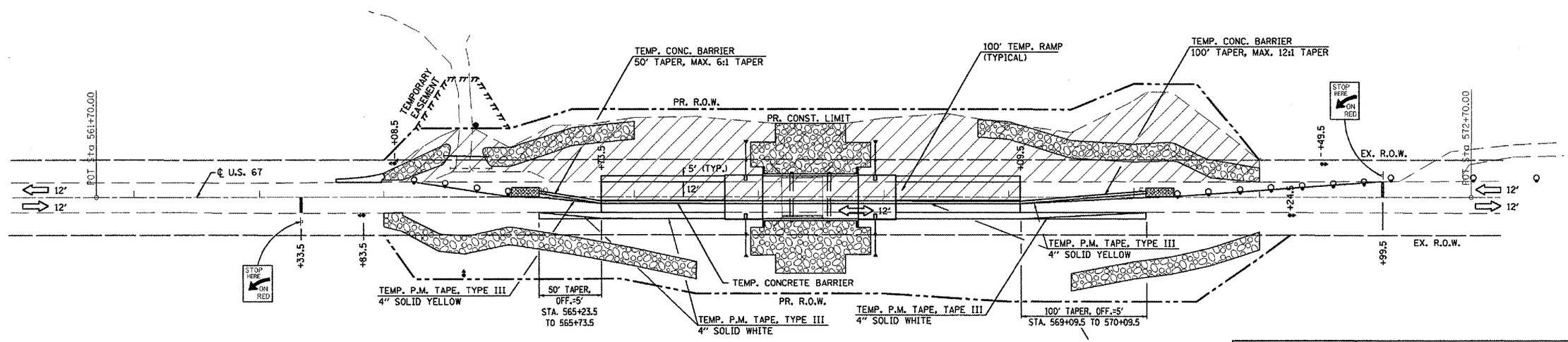


STAGE II CONSTRUCTION:
1. CLOSE EAST HALF OF U.S 67 AS SHOWN IN ACCORDANCE WITH STANDARD 701321. APPLY TEMPORARY PAVEMENT MARKING TAPES.
2. REMOVE EAST HALF OF EXISTING U.S. 67 PAVEMENT AND REMAINING EX. STRUCTURE.
3. ROUGH GRADE EAST SIDE EMBANKMENT. FINISH EAST SIDE DITCHES. FINISH EAST HALF OF THE PROPOSED BRIDGE AND DRAINAGE ITEMS. CONSTRUCT TEMPORARY RAMP AND SHOULDERS.
4. CONSTRUCT ENTRANCE CULVERT AND GUTTER OUTLET. APPLY EROSION CONTROLS ON THE EAST SIDE.

20' 0 20' 40'
SCALE: 1" = 40'

| REVISIONS | |
|---|---|
| NAME | DATE |
| | |

ILLINOIS DEPARTMENT OF TRANSPORTATION

SN 055-0048
TRAFFIC CONTROL PLAN

SCALE: VERT.
HORIZ.
DATE

DRAWN BY
CHECKED BY

PLOT DATE = 8/8/2006
FILE NAME = o:\projects\88939\sheets\pln.dgn
PLOT SCALE = 100.0173 ' / IN.
USER NAME = hoadlyrone