STATE OF ILLINOIS
DEPARTMENT OF TRANSPORTATION

ROUTE NO.	SECTION	COUNTY	TOTAL SHEETS	SHEET NO.
F.A.I. 70	(25-4HB -1)B	EFFINGHAM	67	31
FED. ROAD DIST. NO. 7	ILLINOIS	FED. AID PROJECT-		

SHEET NO. 11
18 SHEETS

Contract #94785

INTERIOR BEAM MOMENT TABLE				
			0.4 Sp. 1 & 0.6 Sp. 2	Pier
	Is	(in⁴)	19683	44404
	Ic (n)	(in⁴)	51948	———
	Ic (3n)	(in⁴)	36891	———
	Ss	(in³)	935	1692
	Sc (n)	(in³)	1299	———
	Sc (3n)	(in³)	1183	———
	DC1	(k/ft.)	0.824	0.967
	M DC1	('k)	631	1822
	DC2	(k/ft.)	0.323	0.323
	M DC2	('k)	314	516
	DW	(k/ft.)	0.329	0.329
	M DW	('k)	319	526
**	M(L)+Imp	('k)	1621	1643
	Mu (Strength I)	('k)	4497	6586
	ϕfMn, ϕfMnc	('k)	6526	———
	fs DC1	(k.s.i.)	8.1	12.9
	fs DC2	(k.s.i.)	3.2	3.7
	fs DW	(k.s.i.)	3.2	3.7
	fs 1.3 (4+I)	(k.s.i.)	19.5	15.1
	fs (Service II)	(k.s.i.)	34.0	35.4
	fs (Total)(Strength I)	(k.s.i.)	———	46.6
	Vf	(k)	30.0	———

INTERIOR BEAM REACTION TABLE			
		Abuts.	Pier
	R DC1	(k)	32.7	135.2
	R DC2+DW	(k)	14.2	46.3
**	R(L)	(k)	14.5	47.2
	R Imp.	(k)	88.5	161.5
	R (Total)	(k)	149.9	390.2

**:Vehicular Live Load plus Pedestrian Load controlled.

Is and Ss are the moment of inertia and section modulus of the steel section used in computing fs (Total-Strength I and Service II) due to non-composite loads.

Ic(n) and Sc(n) are the moment of inertia and section modulus of the composite section used in computing fs (Total-Strength I and Service II) due to short-term composite loads.

Ic(3n) and Sc(3n) are the moment of inertia and section modulus of the composite section used in computing fs (Total-Strength I and Service II) due to long-term composite loads.

DC1 is the dead load acting on the non-composite section.

DC2 is the dead load acting on the long-term composite section.

DW is the dead load acting on the long-term composite section due to wearing surface.

Mu (Strength I) (Factored Design Moment) =1.25 M(DC1+DC2)+1.5M(DW)+1.75 M(L+Imp).

ϕfMn is the compact composite positive moment capacity computed according to Article 6.10.7-1.

ϕfMnc is the compact non-composite negative moment capacity computed according to Article A6.1.1.

fs (Service II) is the sum of the stresses due to DC1+DC2+DW+1.3(L+Imp).

fs (Total) (Strength I) (Non-compact section) is the sum of the stresses due to 1.25(DC1+DC2)+1.5DW+1.75(L+Imp).

Vf is the factored shear range computed according to Article 6.10.10..

Note: All splice plate material shall be AASHTO M 270 Grade 50.
"NTR" denotes members to which Notch Toughness Requirements are applicable.
Two hardened washers shall be required over all oversized holes for diaphragms.

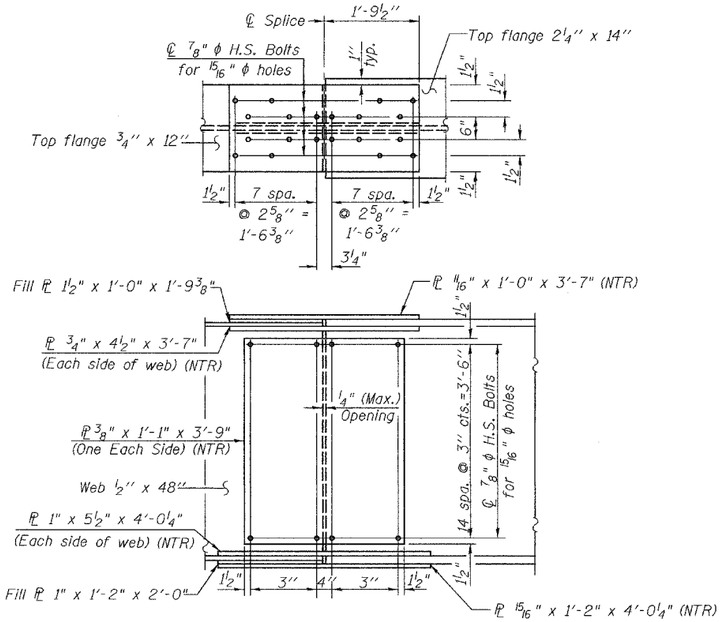

ELEVATION-SPLICE 1 & 2

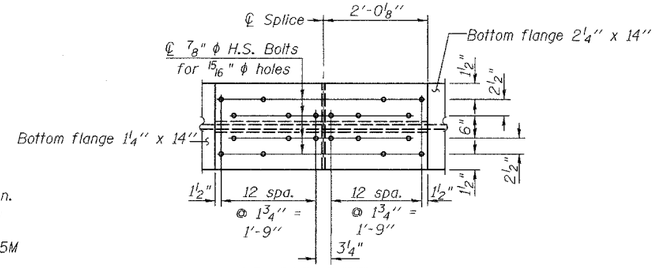

SPLICE DETAIL
(12 Required)

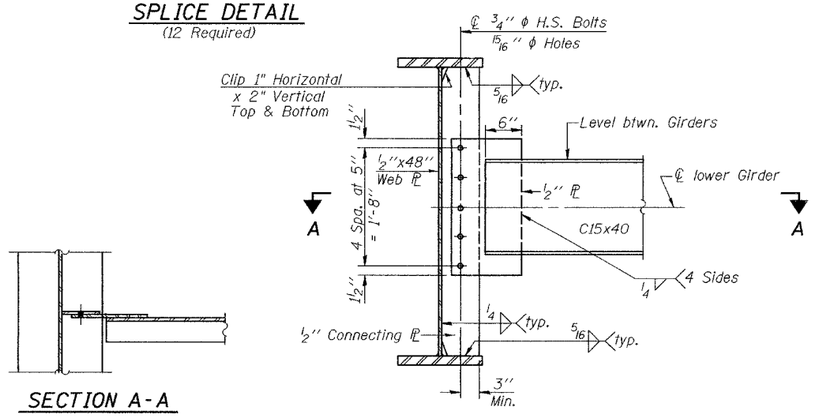

DIAPHRAGM D
(55 Required)

SECTION A-A

*:AASHTO M270 Gr. 50

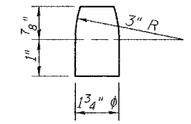

*PINTLE

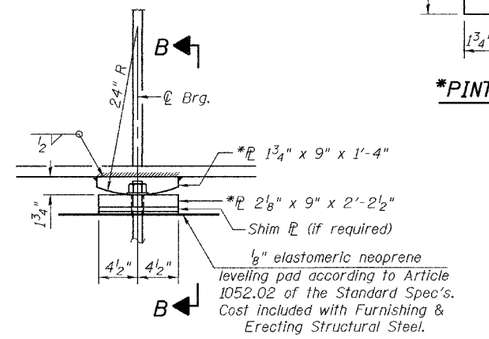

ELEVATION AT PIER

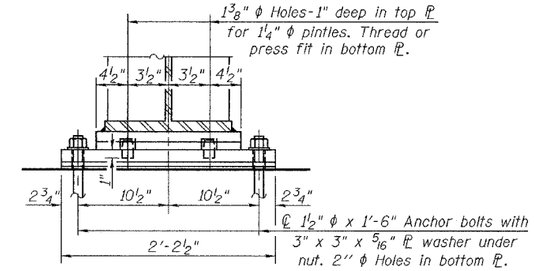

SECTION B-B

PIER BEARING
(6 Required)

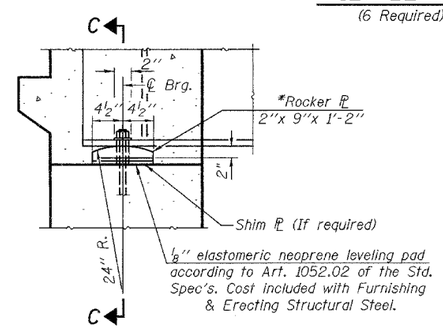

ELEVATION AT ABUTMENTS

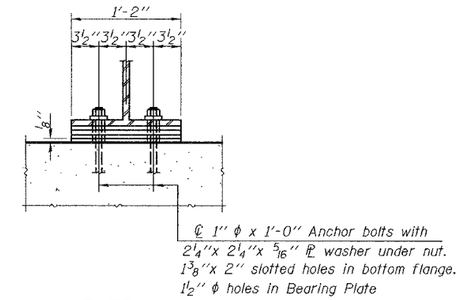

SECTION C-C

ABUTMENT BEARING
(12 Required)

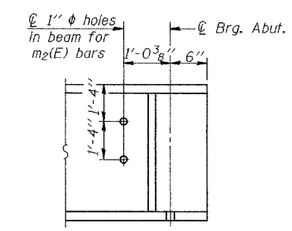

END OF GIRDER ELEVATION

DESIGNED	Dhruv Narielwala
CHECKED	Steve Ryan
DRAWN	R. Sommer
CHECKED	DPN/SMR

September 28 2006
EXAMINED Thomas J. Domagalski — ENGINEER OF BRIDGE DESIGN
PASSED Ralph E. Anderson — ENGINEER OF BRIDGES AND STRUCTURES

STRUCTURAL STEEL
AND BEARING DETAILS
F.A.I. RT. 70 SEC. (25-4HB-1)B
EFFINGHAM COUNTY
STATION 49+98.84
STRUCTURE NO. 025-0102

\projects\psi\2005\0250102.dgn 9/28/2006 10:47:36 AM