F.A.I. RTE.	SECTION	COUNTY	TOTAL SHEETS	SHEET NO.
80/94	*	COOK	631	434
STA.		TO STA.		
FED. ROAD DIST. NO.		ILLINOIS	FED. AID PROJECT	

* (2425 & 2626) R-2 CONTRACT NO. 62111

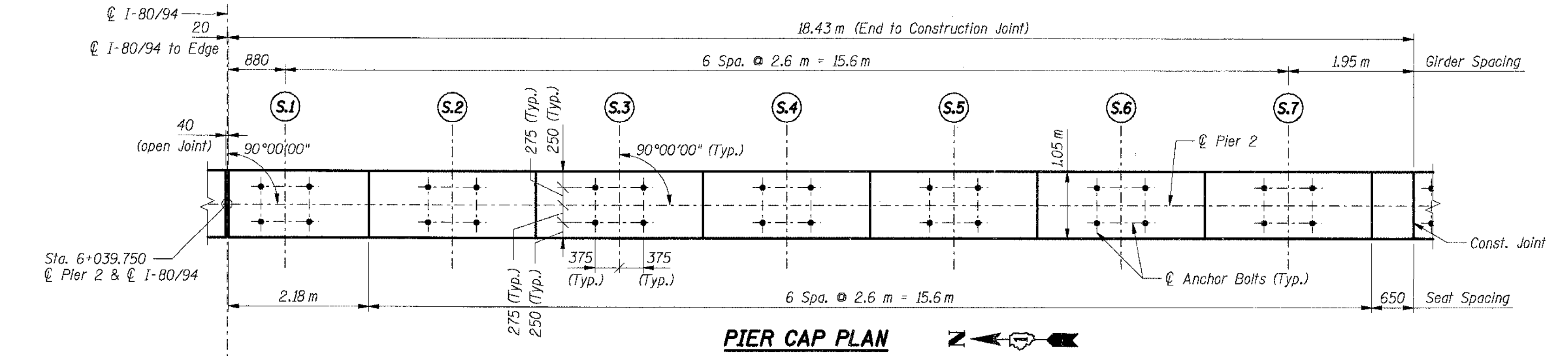

PIER CAP PLAN

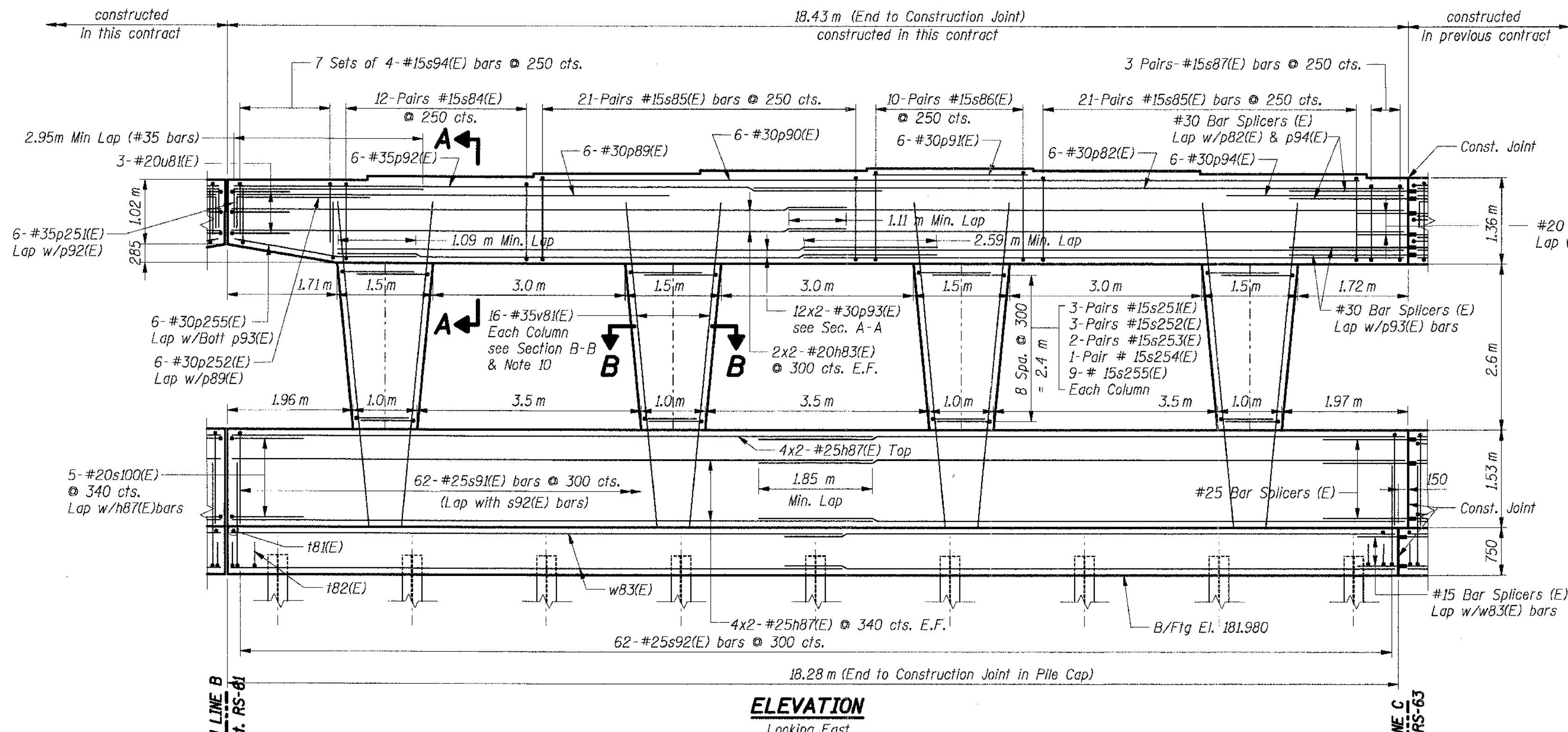

ELEVATION

Looking East

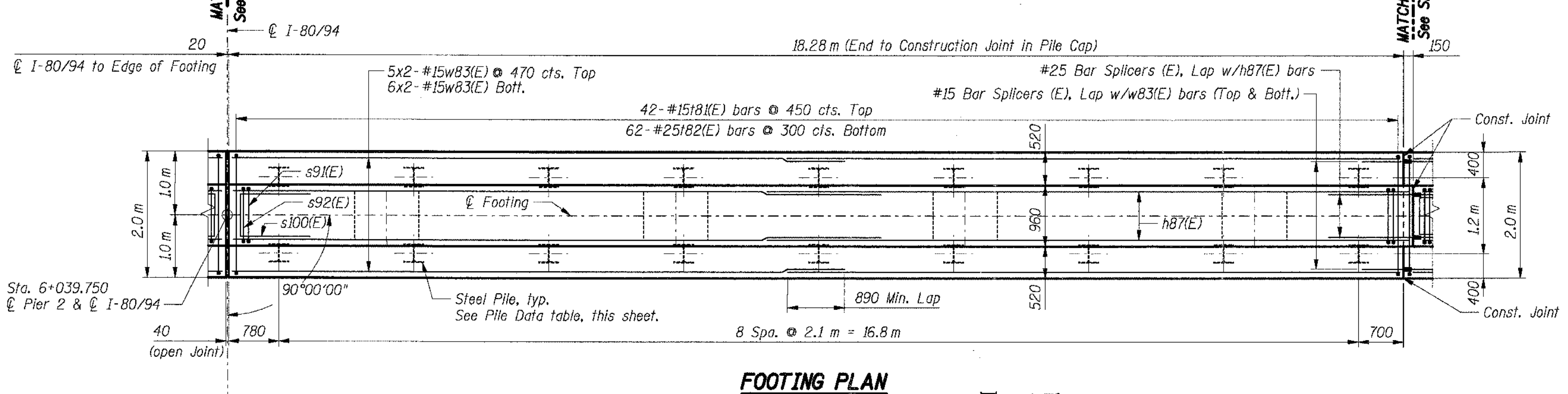

FOOTING PLAN

Bearing Seat Elevation	
Girders	Elevations
S.1	188.165
S.2	188.225
S.3	188.275
S.4	188.325
S.5	188.360
S.6	188.325
S.7	188.275

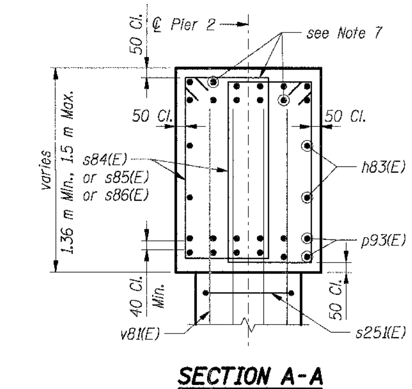

SECTION A-A

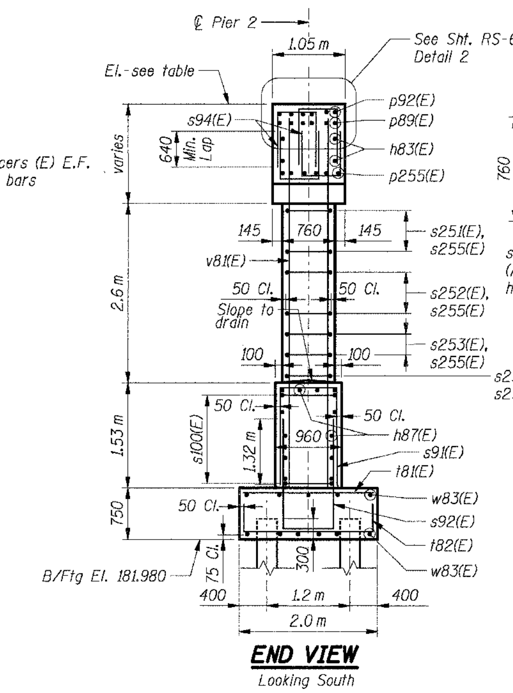

END VIEW

Looking South

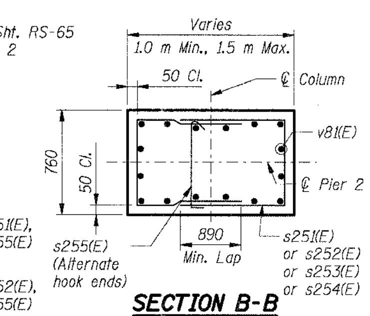

SECTION B-B

KEY PLAN

Notes

1. All dimensions are in millimeters (mm) except as noted.
2. Reinforcement bars designated (E) shall be epoxy coated.
3. E.F. indicates Each Face.
4. All edges shall have 20 mm chamfers except as noted.
5. See Sht. RS-66 for bar splicer details.
6. Work this sheet with Shts. RS-61 & RS-63.
7. Space reinforcement in cap to miss anchor bolts. See Sht. RS-45 for Anchor Bolt details.
8. Bars indicated thus 6x2-#15 etc. indicates 6 lines of bars with 2 lengths per line.
9. For Bar list, details & Bill of Material, see Sht. RS-65.
10. All column "v" bars shall be firmly tied and fixed in position prior to casting crashwall portion of pier.

PILE DATA

Type:	HP 310 x 79
Design Capacity:	600 kN
Required Bearing:	900 kN
Est. Length:	21 m
No. Required:	18

SHT. RS-62 OF 70

REVISIONS	
NAME	DATE

ILLINOIS DEPARTMENT OF TRANSPORTATION
F.A.I. ROUTE 80/94 (KINGERY EXPRESSWAY)
EB & WB INSIDE LANES (MAINLINE) CONSTRUCTION
I-80/94 OVER RAILROAD AVENUE
STRUCTURE NO. 016-2792 STA. 6+025.000
SECTION 1977-121-R
COOK COUNTY

PIER 2
PLAN, ELEVATION & SECTION - III

DATE: 7/18/2005

DRAWN BY: FD
CHECKED BY: TCU

TENG

TENG & ASSOCIATES, INC.
ENGINEERS/ARCHITECTS/PLANNERS
CHICAGO, ILLINOIS

..\FP99R042A.DGN, ..\HR99R022A.DGN, ..\PI99M012A.DGN, ..\PI99R012A.DGN, ..\GP99R042A.DGN, ..\PI99R012A.DGN, ..\PI99R012A.DGN, ..\AB99O012A.DGN, ..\PI99M132A.DGN, ..\PI173112A.DGN
7-12-2005, 10:26:10 T:\DOCUMENT\93175011\STRUCT\DGN\PI173132A.DGN BAJZEKKJ