F.A.I. RTE.	SECTION	COUNTY	TOTAL SHEETS	SHEET NO.
80/94	*	COOK	631	439
STA.		TO STA.		
FED. ROAD DIST. NO.		ILLINOIS	FED. AID PROJECT	

* (2425 & 2626) R-2 CONTRACT NO. 62111

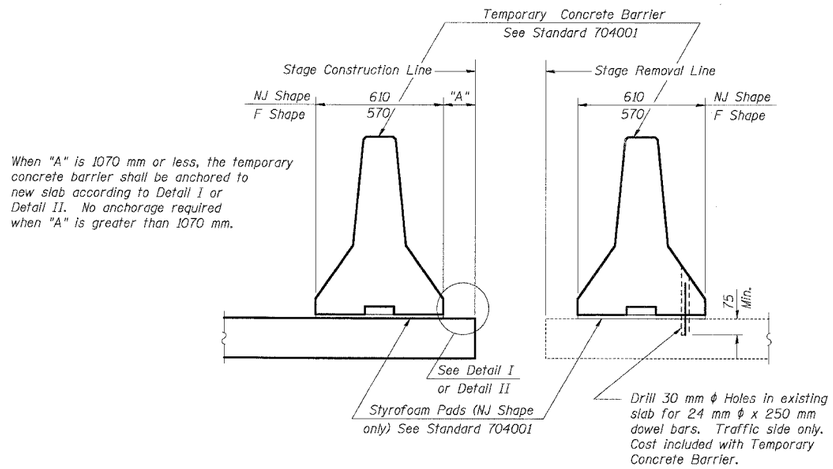

NEW SLAB **EXISTING SLAB**

SECTIONS THRU SLAB

NOTES

Detail I - With Bar Splicer or Couplers:
Connect one (1) 25x180x250 steel ℙ to the top layer of couplers with 2-16 mm ϕ bolts screwed to coupler at approximate ℄ of each barrier panel.

Detail II - With Extended Reinforcement Bars:
Connect one (1) 25x180x250 steel ℙ to the concrete slab with 2-16 mm ϕ Expansion Anchors or cast in place inserts spaced between the top layer of reinforcement at approximate ℄ of each barrier panel.

Cost of anchorage included with Temporary Concrete Barrier.

All dimensions are in millimeters (mm) except as noted.

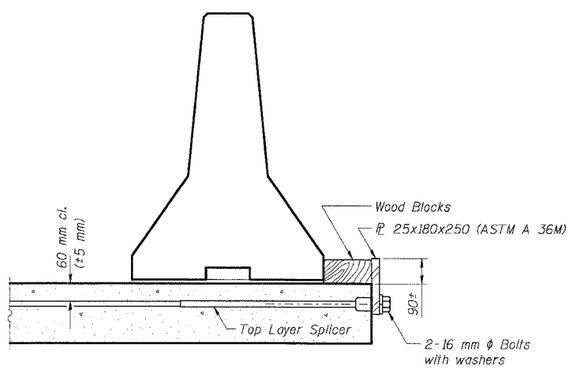

DETAIL I

The 25x180x250 Plate shall not be removed until Stage II Construction forms and reinforcement bars are in place.

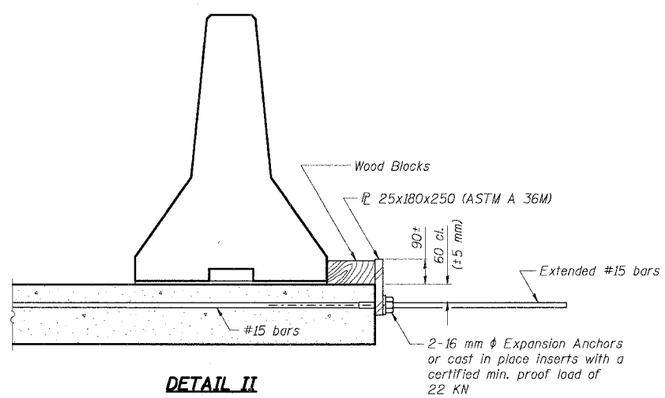

DETAIL II

The 25x180x250 Plate shall not be removed until Stage II Construction forms and all reinforcement bars are in place and the concrete is ready to be placed.

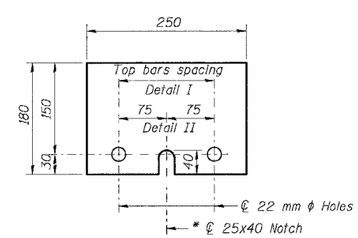

ℙ 25x180x250

* Required only with Detail II

TEMPORARY CONCRETE BARRIER FOR STAGE CONSTRUCTION

SHT. RS-67 OF 70

REVISIONS	
NAME	DATE

ILLINOIS DEPARTMENT OF TRANSPORTATION
F.A.I. ROUTE 80/94 (KINGERY EXPRESSWAY)
EB & WB INSIDE LANES (MAINLINE) CONSTRUCTION
I-80/94 OVER RAILROAD AVENUE
STRUCTURE NO. 016-2792 STA. 6+025.000
SECTION 1977-121-R
COOK COUNTY

TEMPORARY CONCRETE BARRIER FOR STAGE CONSTRUCTION

DATE: 7/18/2005 DRAWN BY: CHECKED BY:

TENG
TENG & ASSOCIATES, INC.
ENGINEERS/ARCHITECTS/PLANNERS
CHICAGO, ILLINOIS

RS-27 9-01-03 (MODIFIED FOR METRIC)

..\AB99M92A.DGN, ..\AB99G02A.DGN
7-12-2005,10:26:13 T:\DOCUMENT\1931750\STRUCT\DGN\MS173022A.DGN
1 2 3 4 5 6 7 8 9 10 11 12 13 14 15 16 17 18 19 20 21 22 23 24 25 26 27 28 29 30 31 32 33 34 35 36 37 38 39 40 41 42 43 44 45 46 47 48 49 50 51 52 53 54 55 56 57 58 59 60 61 62 63
BAJZEKKJ