F.A.I. RTE.	SECTION	COUNTY	TOTAL SHEETS	SHEET NO.
80/94	*	COOK	631	493
STA.		TO STA.		
FED. ROAD DIST. NO.		ILLINOIS	FED. AID PROJECT	

* (2425 & 2626) R-2 CONTRACT NO. 62111

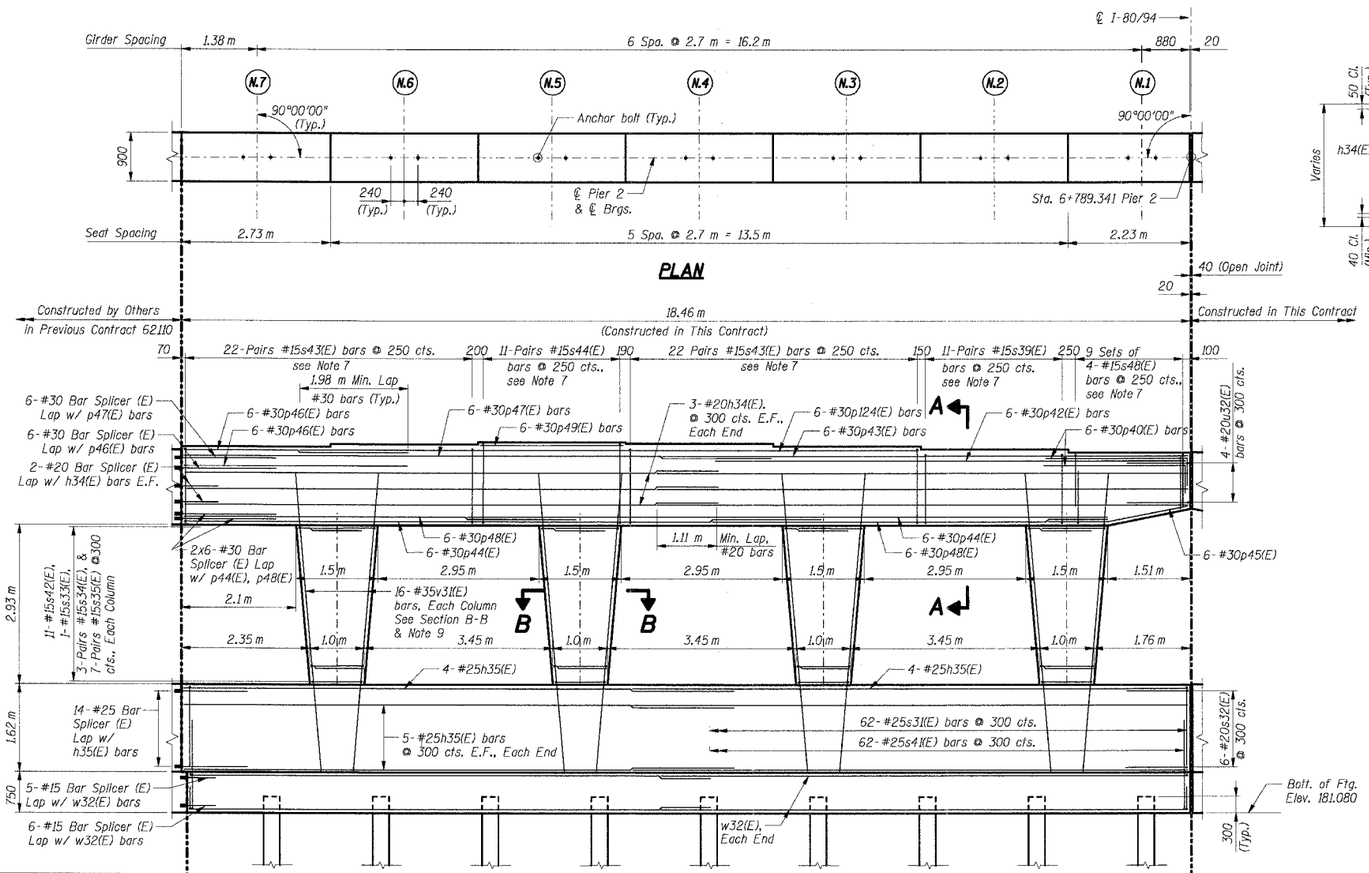

PLAN

ELEVATION
(Looking East)

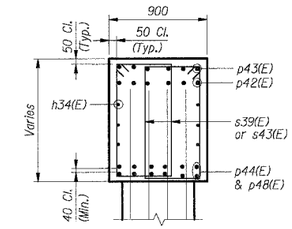

SECTION A-A

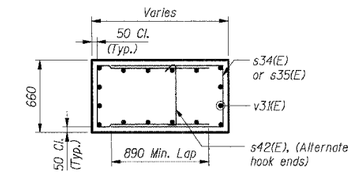

SECTION B-B

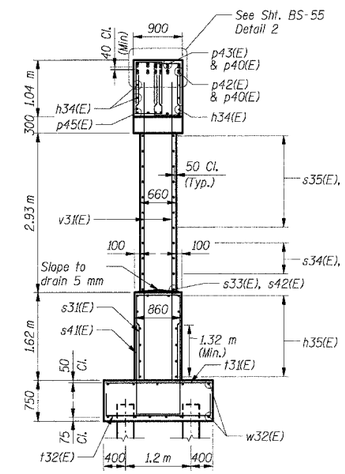

END VIEW
(Looking North)

Bearing Seat Elevation

Girders	Elevations
N.7	187.820
N.6	187.870
N.5	187.910
N.4	187.865
N.3	187.835
N.2	187.780
N.1	187.720

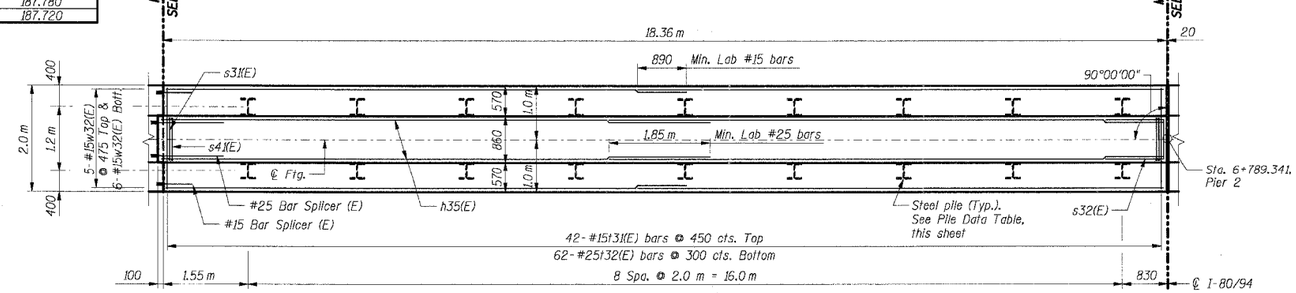

FOOTING PLAN

PILE DATA

Type:	HP 310 x 79
Design Capacity:	600 kN
Required Bearing:	900 kN
Est. Length:	23 m
No. Required:	18

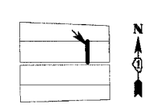

KEY PLAN

Notes:

1. All dimensions are in millimeters (mm) except as noted.
2. Reinforcement bars designated (E) shall be epoxy coated.
3. E.F. indicates Each Face.
4. All edges shall have 20 mm chamfers except as noted.
5. For bar splicer details see Sht. BS-56.
6. Work this sheet with Sht. BS-55.
7. Space reinforcement in cap to miss anchor bolts.
8. For Anchor Bolt details, see Sht. BS-35.
9. All column "v" bars shall be firmly tied and fixed in position prior to casting crashwall portion of pier.

SHT. BS-51 OF 60

REVISIONS	
NAME	DATE

ILLINOIS DEPARTMENT OF TRANSPORTATION
F.A.I. ROUTE 80/94 (KINGERY EXPRESSWAY)
EB & WB INSIDE LANES (MAINLINE) CONSTRUCTION
I-80/94 OVER BURNHAM AVENUE
STRUCTURE NO. 016-2791 STA. 6+772.591
SECTION 1977-121-R
COOK COUNTY

PIER 2
PLAN, ELEVATION & SECTION - II

DATE: 7/18/2005 DRAWN BY: NK CHECKED BY: TCU

TENG & ASSOCIATES, INC.
ENGINEERS/ARCHITECTS/PLANNERS
CHICAGO, ILLINOIS

...\P99W622A.DGN, ...\P99B622A.DGN, ...\AB99D02A.DGN
7-12-2005, 10:27:01 F:\DOCUMENT\93750\STRUCTURE\P1762A.DGN
BALZEKKJ