STATE OF ILLINOIS
DEPARTMENT OF TRANSPORTATION

ROUTE NO.	SECTION	COUNTY	TOTAL SHEETS	SHEET NO.
FAI 90/94	*	COOK	419	222
FED. ROAD DIST. NO.		ILLINOIS	FED. AID PROJECT-	

SHEET NO. 3
8 SHEETS

* 2005 - 008F
Contract #62580

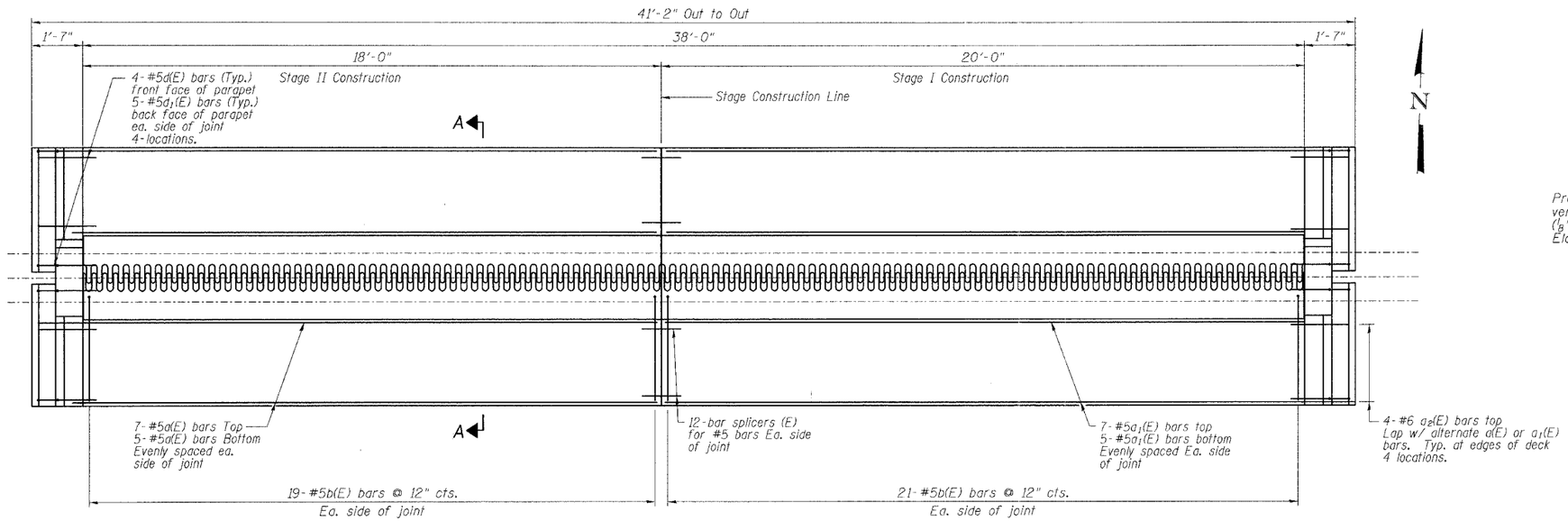

GIRDER LAYOUT AT PIER C10

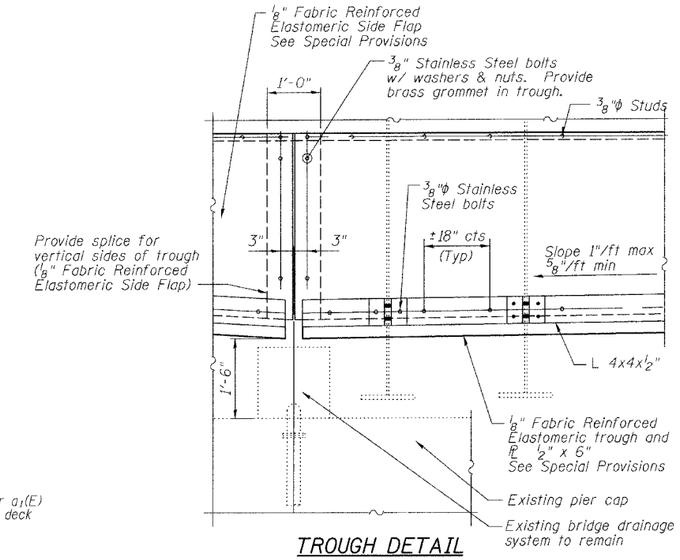

TROUGH DETAIL

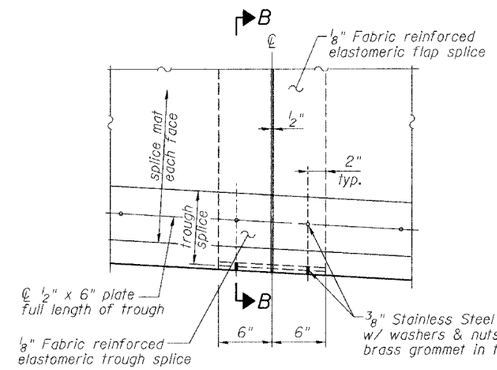

TROUGH SPLICE DETAIL

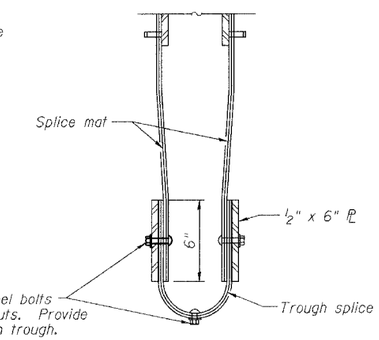

SECTION B-B

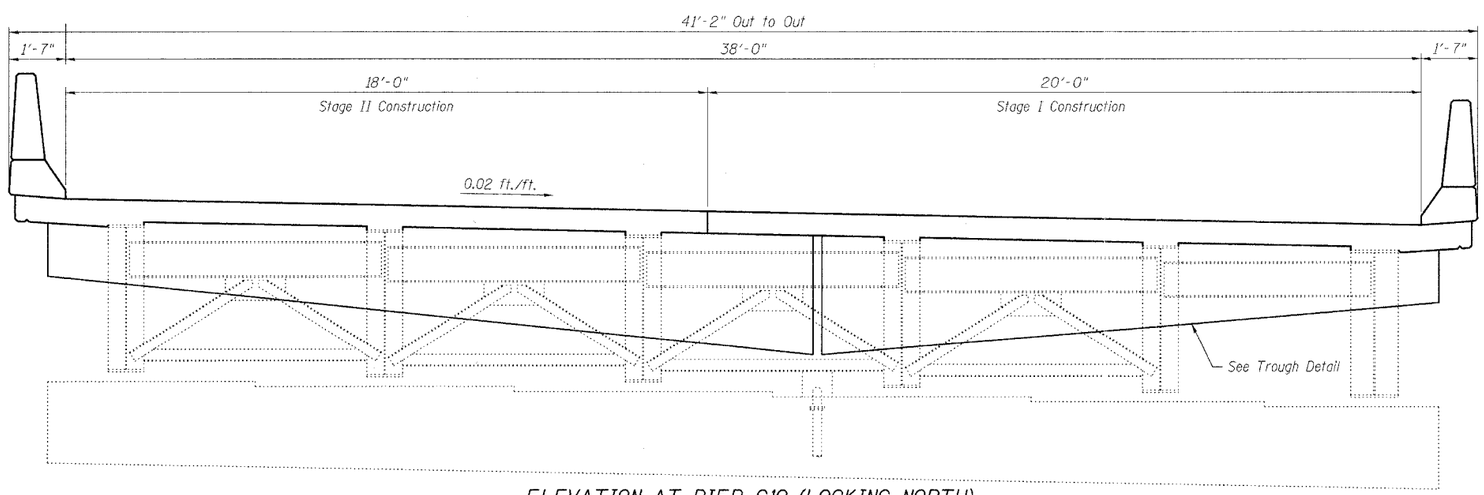

ELEVATION AT PIER C10 (LOOKING NORTH)

Notes:

1. For Parapet Details and Superstructure Bill of Material, see Sheet 5 of 8.
2. For Section A-A, see Sheet 4 of 8.

REVISIONS	
NAME	DATE

ILLINOIS DEPARTMENT OF TRANSPORTATION

PIER C10 JOINT DETAILS

F.A.I. ROUTE 90/94 NORTHBOUND (DAN RYAN EXPRESSWAY)
OVER SOUTH BRANCH - CHICAGO RIVER
COOK COUNTY
S.N. 016-1113 - PIER C10

SCALE: VERT. HORIZ.
DATE: 2/17/05

DRAWN BY: HEBERLING
DESIGNED BY: SANFORD
CHECKED BY:

GREENE & BRADFORD, INC. OF SPRINGFIELD
CONSULTING ENGINEERS
PROFESSIONAL DESIGN FIRM NO. 184-000777
SPRINGFIELD, ILLINOIS 62711
PROFESSIONAL DESIGN FIRM NO. 184-10879
PROFESSIONAL & STRUCTURAL ENGINEERING CORPORATION
(217) 753-8344, (217) 753-6227 - FL, E-MAIL - GBSOLD@GREENEANDBRADFORD.COM

COMPUTER FILE NO. 04286-W04-PJI
PROJECT 04286-W04
8/3/05-MML

FILE NAME = $FILE$
PLOT SCALE = $plotscale$ DRV = $PLOTTER$
PLOT DATE = 8/3/2005
PLOT TIME = 9:47:27 AM
OPERATOR = michelle1