STATE OF ILLINOIS
DEPARTMENT OF TRANSPORTATION

ROUTE NO.	SECTION	COUNTY	TOTAL SHEETS	SHEET NO.
S.B.I. F.A. 646	(102) BR-3	Whiteside	57	19
FED. ROAD DIST. NO. 7	ILLINOIS	FED. AID PROJECT-		

SHEET NO. 7
24 SHEETS

CONTRACT NO. 64426

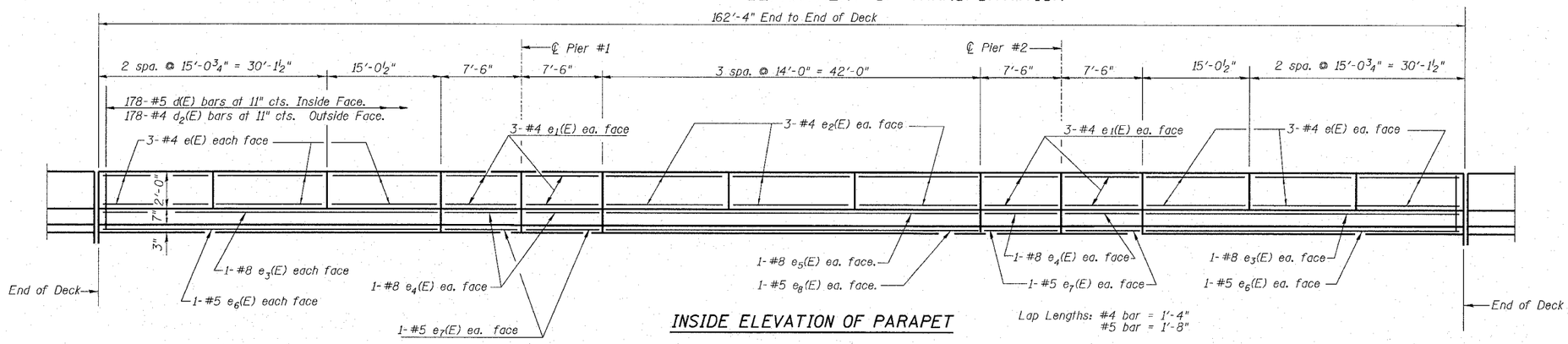

INSIDE ELEVATION OF PARAPET

Lap Lengths: #4 bar = 1'-4"
#5 bar = 1'-8"

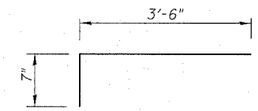

BAR x(E)

SUPERSTRUCTURE BILL OF MATERIAL

Bar	No.	Size	Length	Shape
d(E)	560	#5	18'-10"	
d_1(E)	434	#5	18'-10"	
d_2(E)	280	#6	4'-0"	
d_3(E)	8	#6	24'-10"	
b(E)	252	#5	28'-5"	
b_1(E)	78	#6	35'-0"	
b_2(E)	252	#5	24'-7"	
d(E)	356	#5	3'-0"	
d_1(E)	356	#5	2'-5"	
d_2(E)	356	#4	3'-0"	
d_3(E)	356	#4	3'-7"	
e(E)	72	#4	14'-9"	
e_1(E)	48	#4	7'-2"	
e_2(E)	36	#4	13'-8"	
e_3(E)	8	#8	44'-10"	
e_4(E)	16	#8	7'-2"	
e_5(E)	4	#8	41'-8"	
e_6(E)	8	#5	44'-10"	
e_7(E)	16	#5	7'-2"	
e_8(E)	4	#5	41'-8"	
x(E)	72	#5	4'-1"	
Reinforcement Bars, Epoxy Coated			Pound	47,060
Concrete Superstructure			Cu. Yds.	203.8

Reinforcement bars designated (E) shall be epoxy coated.
Bars indicated thus 1 x 2-#5 etc. indicates 1 line of bars with 2 lengths per line.

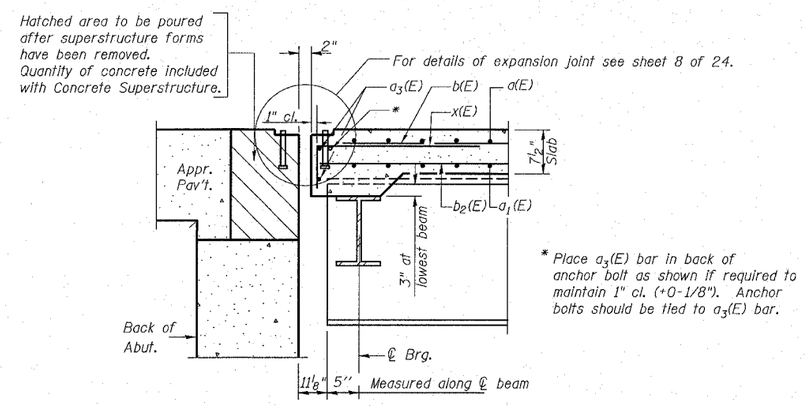

SECTION A-A

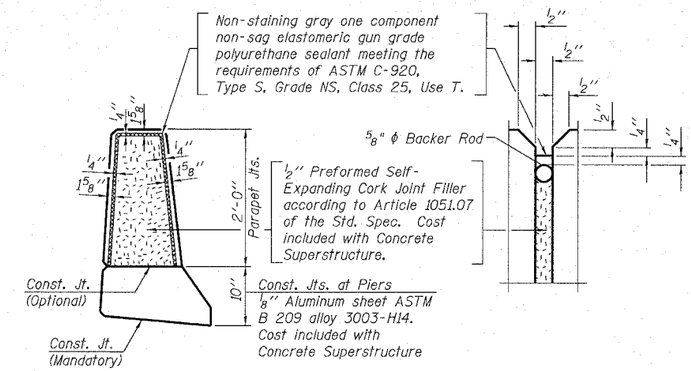

PARAPET JOINT DETAILS

Notes:
The exterior surfaces of the floor drains shall be painted with the finish coat as specified in the special provisions for Cleaning and Painting New Metal Structures. The exterior surfaces of the drains shall be cleaned according to Steel Structures Painting Council's Spec. SSPC-SP1 prior to painting.
Fiberglass pipe shall conform to ASTM D 2996, with short-time rupture strength hoop tensile stress of 30,000 p.s.i. minimum.

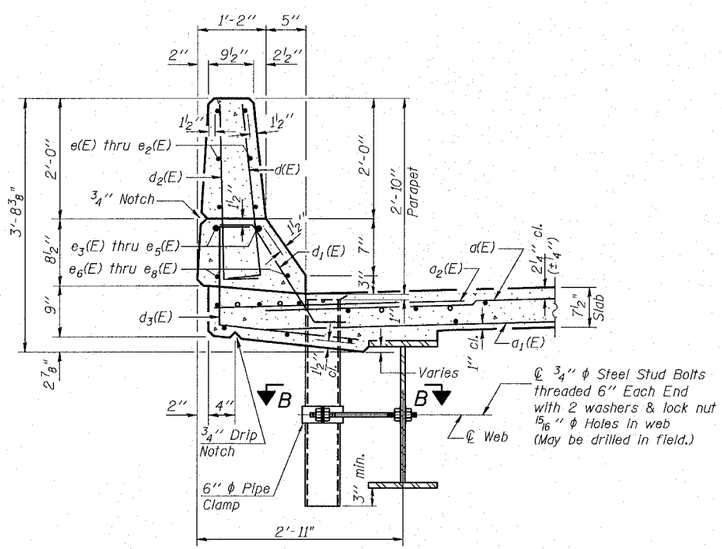

SECTION THRU PARAPET

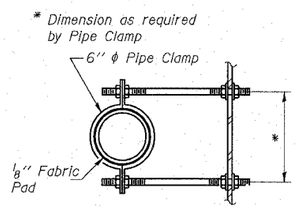

SECTION B-B

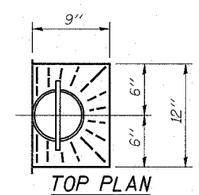

TOP PLAN

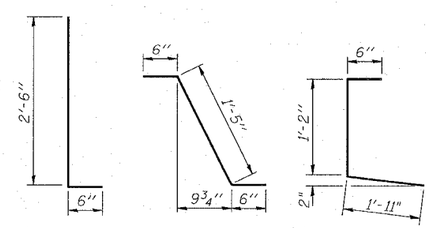

BARS d(E) & d_2(E) BAR d_1(E) BAR d_3(E)

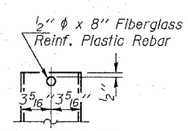

FIBERGLASS PIPE

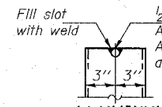

ALUMINUM TUBE

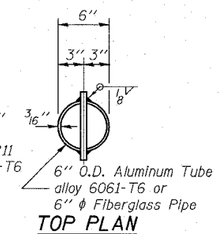

TOP PLAN
(Showing Aluminum Tube)

SUPERSTRUCTURE DETAILS
IL RTE 40 OVER WINNEBAGO DITCH
F.A.P. 646 SECTION (102)BR-3
WHITESIDE COUNTY
STATION 558+38
S.N. 0098-0109

DESIGNED DDB	RANDOLPH & ASSOCIATES, INC. 101 W. PIONEER PARKWAY, PEORIA, IL 61615-3124 TEL.309-673-9044• FAX.309-673-6255 1-888-501-1021 HTTP://WWW.RANDOLPHINC.COM CONSULTING ENGINEERS • LAND SURVEYORS	FILE NUMBER 136.110	
CHECKED AMPH			
DRAWN JDB		DATE Aug. 2005	
CHECKED DDB			

S-1-D 9-01-03

R:\Projects\0136\0136-110 Winn ph 11\bridge planset\07 superstructure.dgn 10:08:06 AM 8/8/2005