STATE OF ILLINOIS
DEPARTMENT OF TRANSPORTATION

ROUTE NO.	SECTION	COUNTY	TOTAL SHEETS	SHEET NO.
S.B.I. - F.A.I.	*	Ogle	40	20
FED. ROAD DIST. NO. 7		ILLINOIS	FED. AID PROJECT-	

SHEET NO. 5 / 11 SHEETS

* Section 119BR-3 Contract #64A47

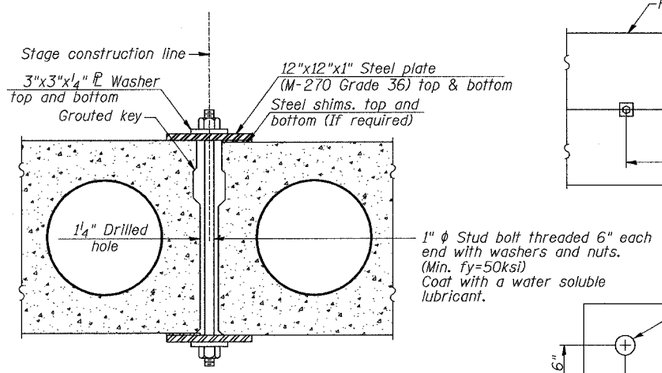

SECTION AT STAGE CONSTRUCTION LINE

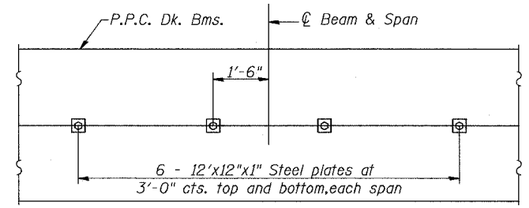

PLAN

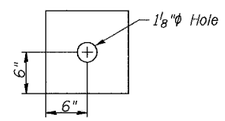

CLAMPING PLATE

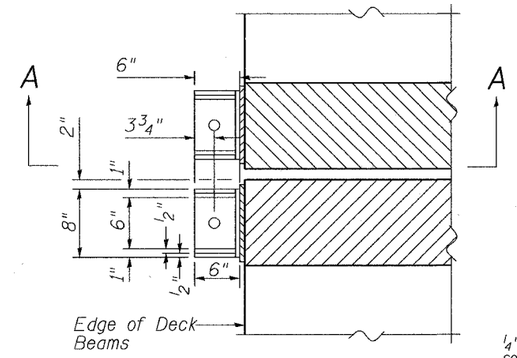

PLAN @ PIER

TEMPORARY SIDE RETAINER DETAIL

(4 Required)

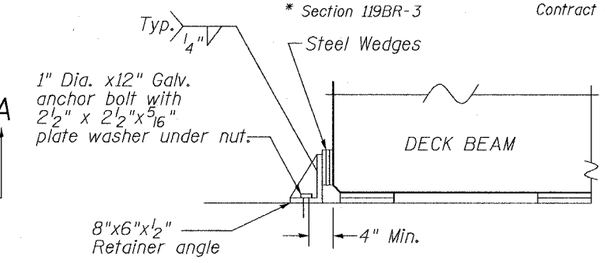

SECTION A-A

Note: After block-outs are poured and cured the retainer angles shall be removed. Anchor bolts may be left in place.

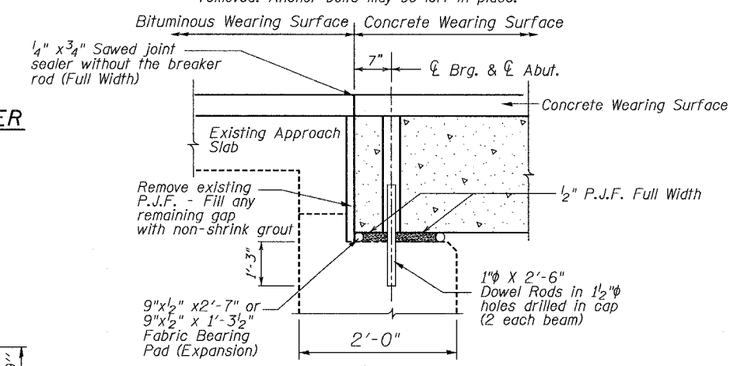

SECTION THRU ABUTMENTS

(Dimension at Rt. ∠'s)

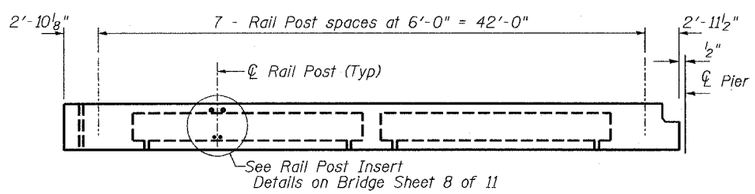

OUTSIDE BEAM ELEVATION

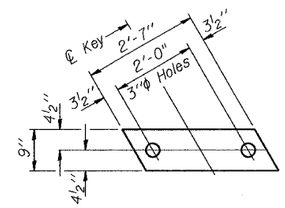

FABRIC BEARING PAD

(Abutments - Interior)

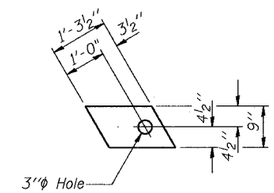

FABRIC BEARING PAD

(Abutments - Exterior)
(Abutments - Stage Line)

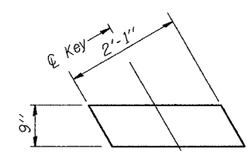

FABRIC BEARING PAD

(Piers - Interior)

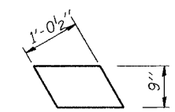

FABRIC BEARING PAD

(Piers - Exterior)
(Piers - Stage Line

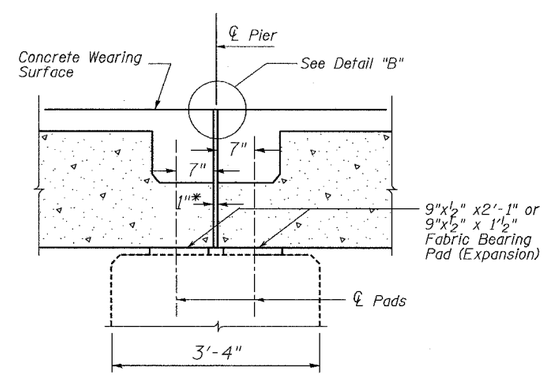

SECTION THRU PIER

(Dimension at Rt. ∠'s)

* 1" Jt. shall be filled with non-shrink grout. 1" dimension may vary to accomodate tolerance in beams lengths.

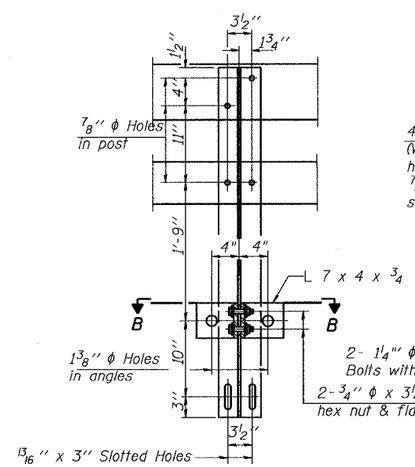

SECTION A-A

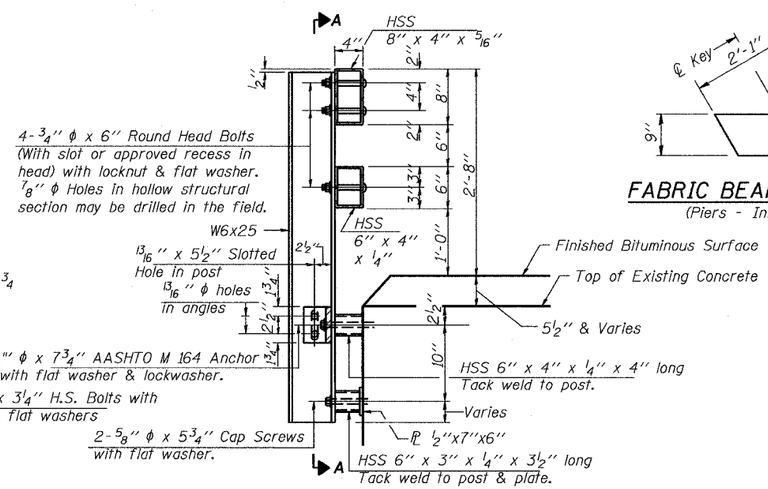

SECTION THRU
EDGE - APPROACH SPAN

See Bridge Sheet 9 of 11 for Existing Anchor Details

Bridge Joint System
Exp. 1 3/8" (See Details
Br. Sheet 6 & 7 of 11)

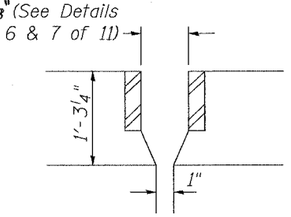

DETAIL "B"

(Dimension at Rt. ∠'s)

DESIGNED	SB
CHECKED	RB
DRAWN	DB, BS
CHECKED	SB

DECK BEAM DETAILS
F.A.P. 553 (IL 72)
OVER STILLMAN CREEK
SECTION 119BR-3
OGLE COUNTY
STR. NO. 071-0042

...\071-0042\DECK BEAM 0042.dgn 8/29/2005 3:51:37 PM