CONTRACT NO. 90632

F.A.P. RTE.	SECTION	COUNTY	TOTAL SHEETS	SHEET NO.
729	34Z-4	VERMILION	285	86
FED. ROAD DIST. NO.		ILLINOIS	FED. AID PROJECT	

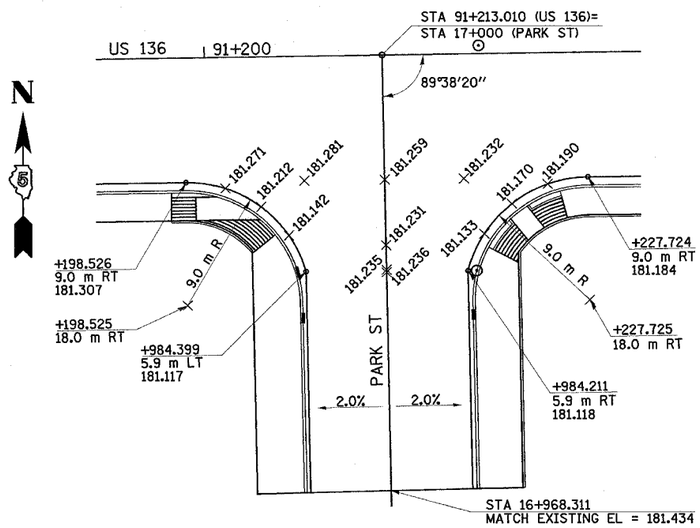

SEE CROSS SECTIONS FOR PARK STREET PROFILE

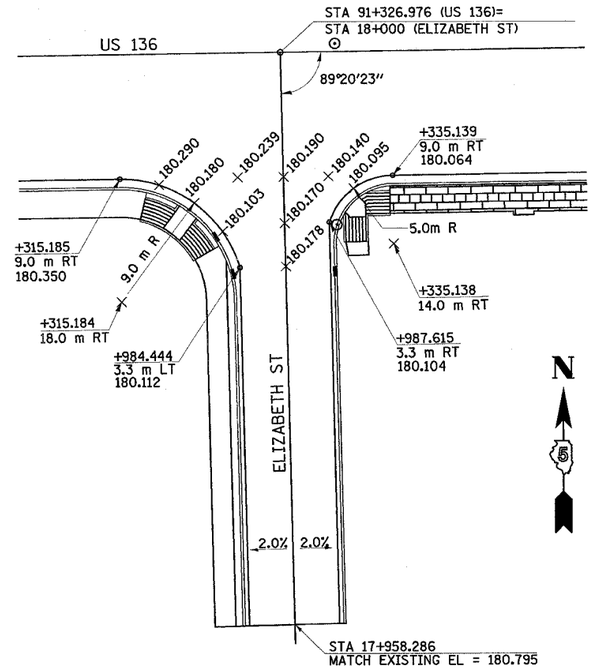

SEE CROSS SECTIONS FOR ELIZABETH STREET PROFILE

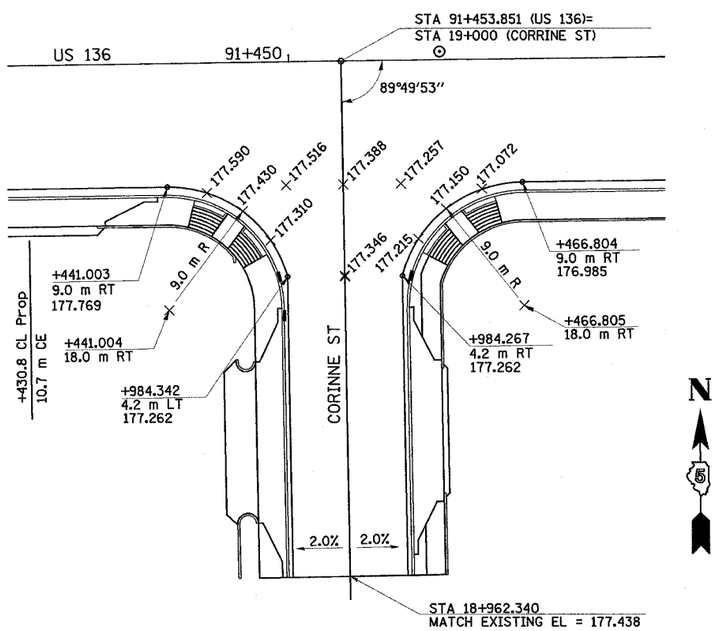

SEE CROSS SECTIONS FOR CORRINE STREET PROFILE

NOTES: UNLESS OTHERWISE NOTED, ELEVATIONS ARE LOCATED AT QUARTER POINTS AND/OR HALF POINTS ALONG THE RADIUS RETURN.

ELEVATIONS SHOWN ADJACENT TO DRAINAGE STRUCTURES SHALL BE THE EDGE OF PAVEMENT ELEVATION AT RIGHT ANGLES TO THE FACE OF CURB AT THE CENTER OF THE DRAINAGE STRUCTURE.

2.0 0 2.0 4.0 6.0 8.0 10.0
SCALE IN METERS

REVISIONS	
NAME	DATE

ILLINOIS DEPARTMENT OF TRANSPORTATION

INTERSECTION DETAILS

DRAWN BY TD

DATE MAY 03

CHECKED BY AWM

200011005