F.A.P. RTE.	SECTION	COUNTY	TOTAL SHEETS	SHEET NO.
729	34Z-4	VERMILION	285	152
STA. 90+460.000		TO STA. 90+470.000		
FED. ROAD DIST. NO.		ILLINOIS	FED. AID PROJECT	
14	15	16	17	18

CONTRACT NO. 90632

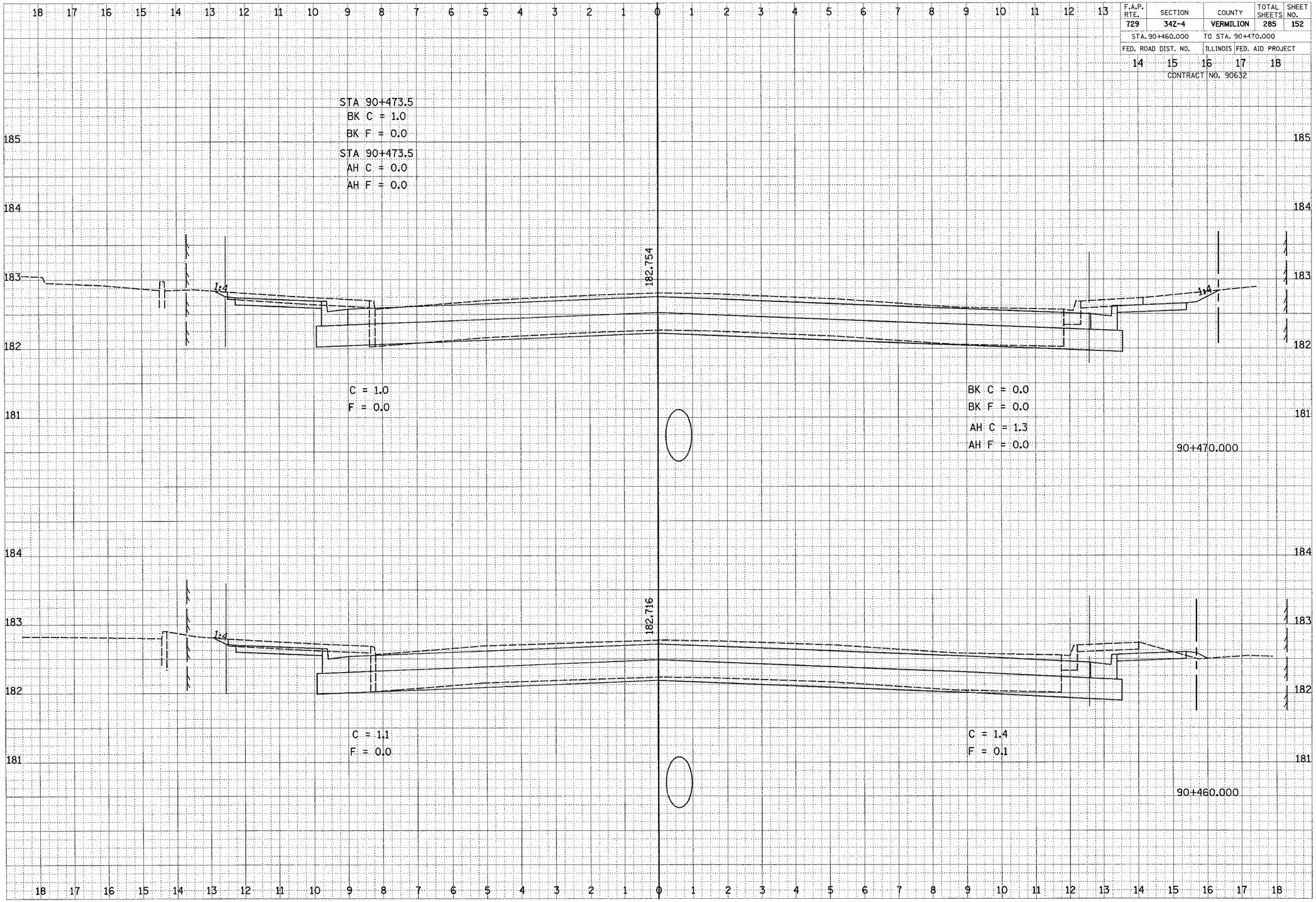

CROSS SECTIONS, FAP 729 (US 136)