F.A.P. RTE.	SECTION	COUNTY	TOTAL SHEETS	SHEET NO.
729	34Z-4	VERMILION	285	171

STA. 90+750.000 TO STA. 90+760.000

FED. ROAD DIST. NO. | ILLINOIS | FED. AID PROJECT

CONTRACT NO. 90632

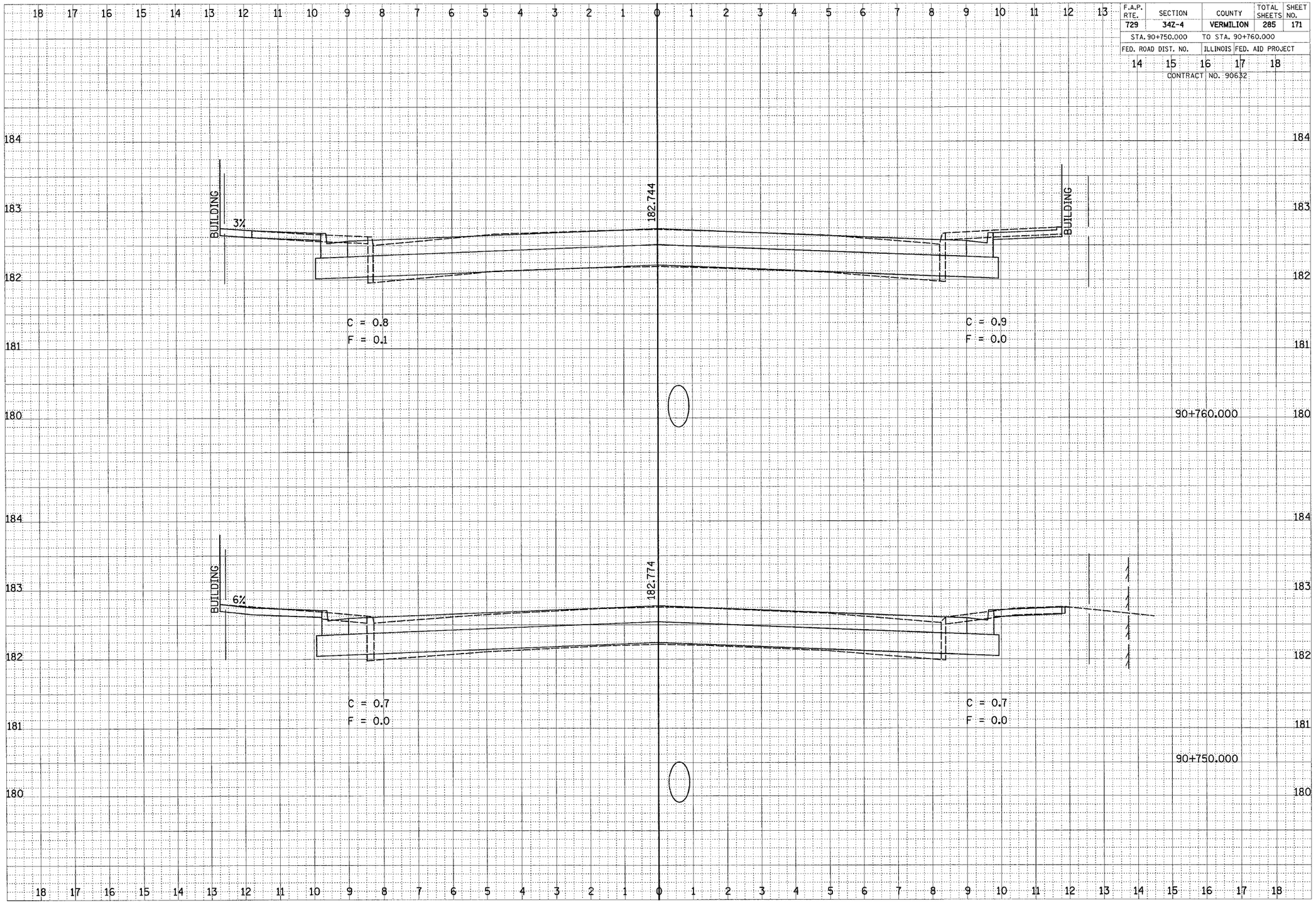

CROSS SECTIONS, FAP 729 (US 136)