F.A.P. RTE.	SECTION	COUNTY	TOTAL SHEETS	SHEET NO.
750	(112,113) Y, WRS	FAYETTE	178	35
STA.		TO STA.		
FED. ROAD DIST. NO. 7	ILLINOIS	FED. AID PROJECT		

CONTRACT NO. 94927

DETAIL OF PRECAST CONCRETE BOX CULVERT END SECTION

AASHTO DESIGNATION M259M
(ASTM DESIGNATION C-789M)
DESIGN LOADING = MS18

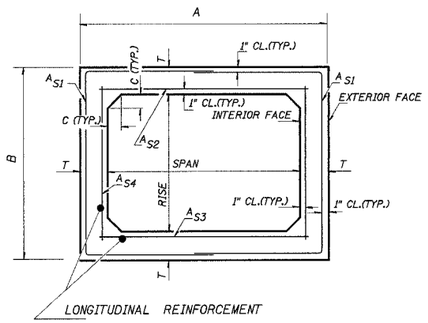

CROSS SECTION

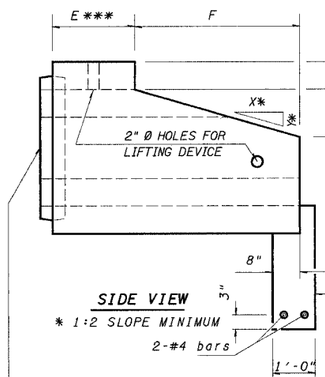

SIDE VIEW

* 1:2 SLOPE MINIMUM

END CONNECTION TO FIT PRECAST BOX CULVERT (BELL OR SPIGOT MAY BE OMITTED WHEN COLLARING TO AN EXISTING BOX OR HEADWALL).

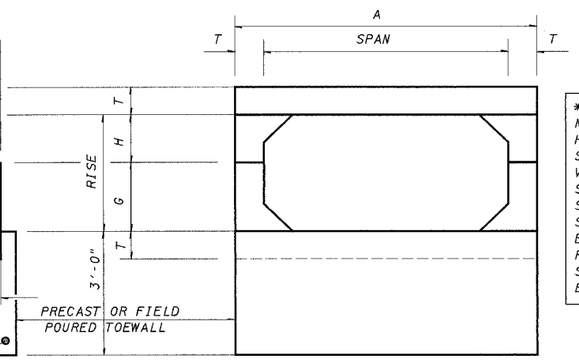

END VIEW

***
NOTE: PROVIDE PRECAST 6" HIGH X 6" THICK FULL-WIDTH HEADWALL CENTERED AT 6" FROM THE FRONT FACE OF THE TOP SLAB. OR AT THE CONTRACTORS OPTION, PROVIDE #4 VERTICAL BARS LOCATED 6" FROM THE FRONT FACE OF THE TOP SLAB FOR CAST IN PLACE HEADWALL AFTER SETTING EACH END SECTION IN PLACE. BARS SHALL EXTEND 5" ABOVE SLAB AND SPACED ON 6" CENTERS BEGINNING AND ENDING 4" FROM THE EXTERIOR VERTICAL SIDE OF THE END SECTION. THE COST FOR PROVIDING HEADWALLS WILL NOT BE PAID FOR SEPARATELY AND SHALL BE INCLUDED IN THE CONTRACT UNIT PRICE PER EACH BOX CULVERT END SECTION.

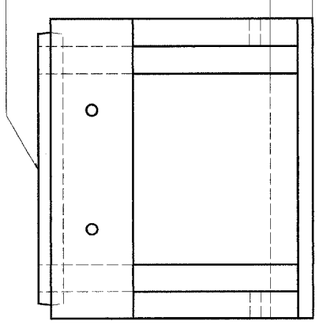

PLAN

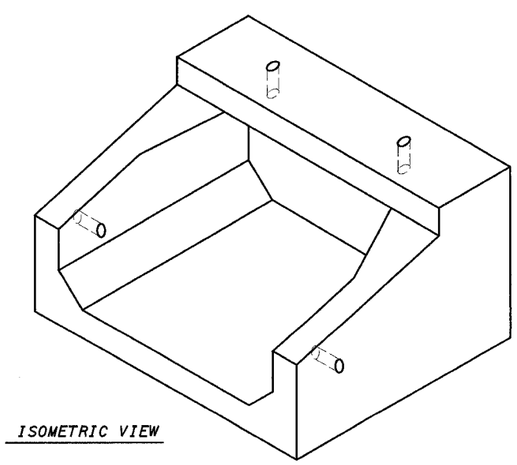

ISOMETRIC VIEW

CULVERT SIZE	DIMENSIONS **								
SPANxRISE (FOOT)	T	A	B	C	E	F	G	H	SLOPE
	INCH	FT-IN	FT-IN	INCH	FT-IN	FT-IN	FT-IN	FT-IN	Y:X
2x2	4	2-8	2-8	4	3-0	3-0	1-0	1-0	1:3
3x2	4	3-8	2-8	4	3-0	3-0	1-0	1-0	1:3
3x3	4	3-8	3-8	4	2-0	4-0	1-8	1-4	1:3
4x2	5	4-10	2-10	5	3-0	3-0	1-0	1- 0	1:3
4x3	5	4-10	3-10	5	2-0	4-0	1-8	1-4	1:3
4x4	5	4-10	4-10	5	2-0	4-0	2-0	2-0	1:2
4x6	7	5-2	7-2	7	2-0	6-0	3-0	3-0	1:2
5x2	5	5-10	2-10	6	3-0	3-0	1-0	1-0	1:3
5x3	6	6-0	4-0	6	2-0	4-0	1-8	1-4	1:3
5x4	6	6-0	5-0	6	2-0	4-0	2-0	2-0	1:2
5x5	6	6-0	6-0	6	2-0	4-0	3-0	2-0	1:2
6x2	7	7-2	3-2	7	3-0	3-0	1-0	1-0	1:3
6x3	7	7-2	4-2	7	2-0	4-0	1-8	1-4	1:3
6x4	7	7-2	5-2	7	2-0	4-0	2-0	2-0	1:2
6x5	7	7-2	6-2	7					
6x6	7	7-2	7-2	7	2-0	6-0	3-0	3-0	1:2
7x4	8	8-4	5-4	8	2-0	4-0	2-0	2-0	1:2
7x5	8	8-4	6-4	8					
7x6	8	8-4	7-4	8					
7x7	8	8-4	8-4	8					
8x4	8	9-4	5-4	8	2-0	4-0	2-0	2-0	1:2
8x5	8	9-4	6-4	8					
8x6	8	9-4	7-4	8					
8x7	8	9-4	8-4	8					
8x8	8	9-4	9-4	8					
9x5	9	10-6	6-6	9					
9x6	9	10-6	7-6	9					
9x7	9	10-6	8-6	9					
9x8	9	10-6	9-6	9					
9x9	9	10-6	10-6	9					
10x5	10	11-8	6-8	10					
10x6	10	11-8	7-8	10					
10x7	10	11-8	8-8	10					
10x8	10	11-8	9-8	10					
10x9	10	11-8	10-8	10					
10x10	10	11-8	11-8	10					
11x4	11	12-10	5-10	11					
11x6	11	12-10	7-10	11					
11x8	11	12-10	9-10	11					
11x10	11	12-10	11-10	11					
11x11	11	12-10	12-10	11					
12x4	12	14-0	6-0	12					
12x6	12	14-0	8-0	12					
12x8	12	14-0	10-0	12					
12x10	12	14-0	12-0	12					
12x12	12	14-0	14-0	12					
CULVERTS WITH RISE > 6' REQUIRE CAST-IN-PLACE END SECTIONS									

GENERAL NOTES

SHOP PLANS FOR THE REINFORCEMENT SHALL BE SUBMITTED IN ACCORDANCE WITH THE REQUIREMENTS OF ARTICLE 504.04(a) OF THE STANDARD SPECIFICATIONS.

MINIMUM CONCRETE STRENGTH SHALL BE 5000 PSI AFTER 28 DAYS.

THE JOINTS OF THE PRECAST BOX SECTIONS SHALL BE SEALED WITH ACCORDANCE WITH ARTICLE 542.04(d) OF THE STANDARD SPECIFICATIONS FOR ROAD AND BRIDGE CONSTRUCTION.

THE TERMS A_{S1}, A_{S2}, A_{S3}, AND A_{S4} DENOTE THE REQUIRED STEEL AREAS FOR REINFORCEMENT AS SPECIFIED IN AASHTO M259M. REINFORCEMENT SHALL BE WELDED WIRE FABRIC CONFORMING TO AASHTO SPECIFICATIONS M55M.

LIFTING HOLES SHALL BE FILLED WITH CONCRETE PLUGS AND MASTIC AFTER THE END SECTIONS ARE IN PLACE.

REVISIONS	
NAME	DATE

ILLINOIS DEPARTMENT OF TRANSPORTATION

DETAILS OF PRECAST CONCRETE BOX CULVERT END SECTION

F.A.P. 750 (IL. RTE. 185)
SECTION 112,113 - FAYETTE CO.

SCALE: DRAWN BY CRO
DATE JULY 22, 2005 CHECKED BY RCY

PLAN | SURVEYED | PLOTTED | ALIGNMENT CHECKED | RT. OF WAY CHECKED | CADD FILE NAME | NOTE BOOK NO. | BY | DATE

J:\2003\030045\0002\Civil\Phase 2 Kdg\DGN\p2_750_Detail_Sheets.dgn 8/5/2005 1:52:34 PM