VARIOUS ROUTES
VARIOUS COUNTIES
D-9 BRIDGE PAINTING FY 06-1
SHEET 35 OF 48
CONTRACT 98941

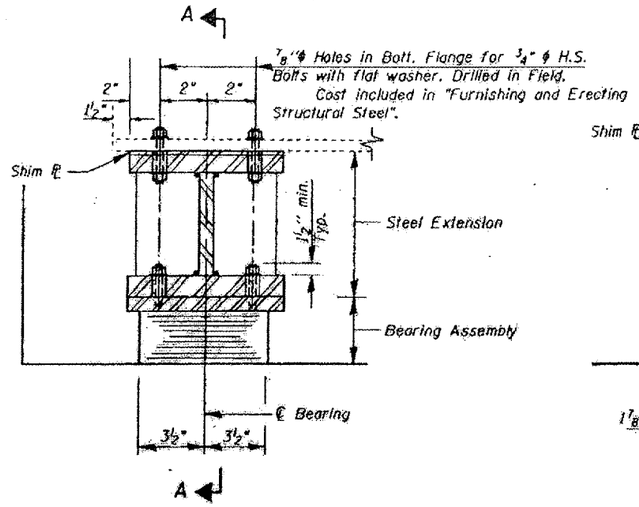

ELEVATION

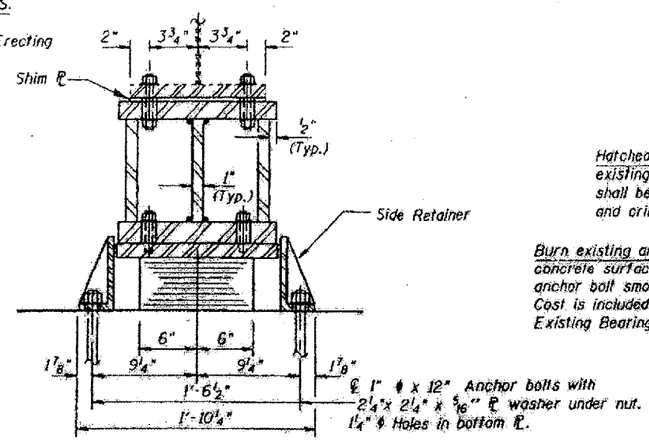

SECTION A-A

TYPE I ELASTOMERIC BEARING WEST ABUT.

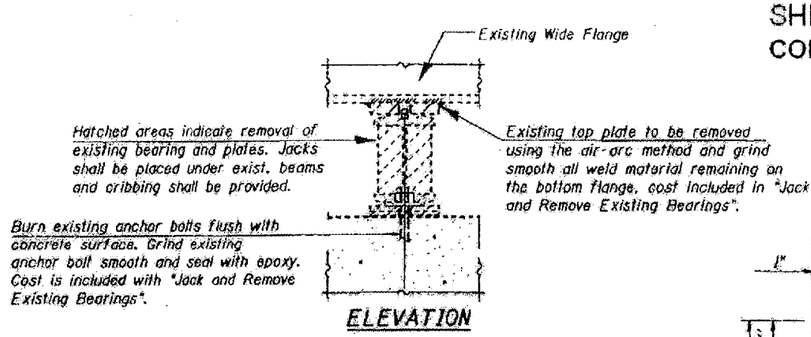

ELEVATION

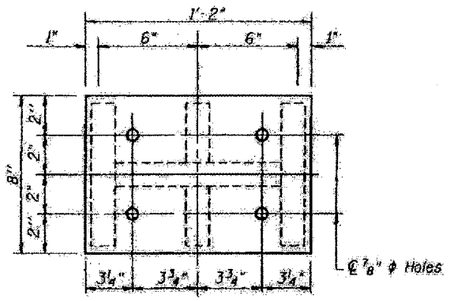

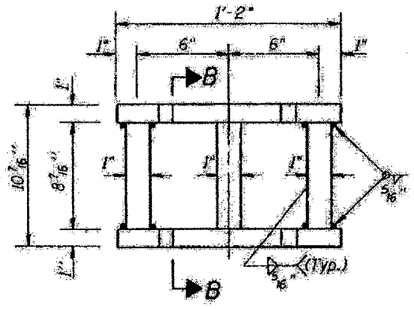

STEEL EXTENSION AT WEST ABUT.

*INTERIOR BEAM REACTION TABLE

	SERVICE LOADS
R ℙ (K)	13.8
R ⊥ (K)	34.8
Imp (K)	10.4
R Total (K)	59.0

* Min. Jack capacity at each Beam shall be 30 Tons.

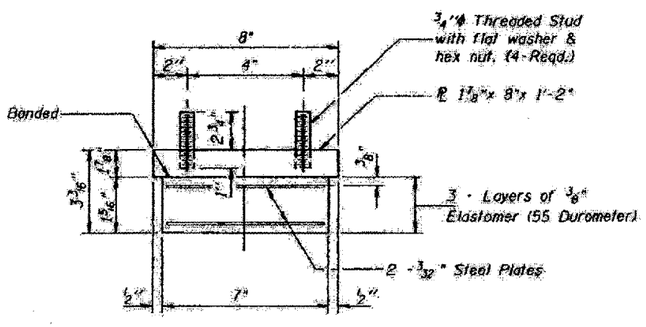

BEARING ASSEMBLY

Note: Shim plates shall not be placed under Bearing Assembly

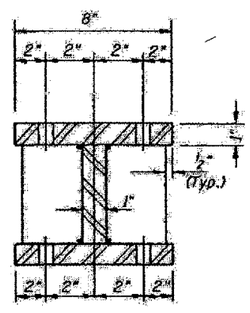

SECTION B-B

BILL OF MATERIAL

ITEM	UNIT	TOTAL
ELASTOMERIC BEARING ASSEMBLY TYPE I	EACH	12

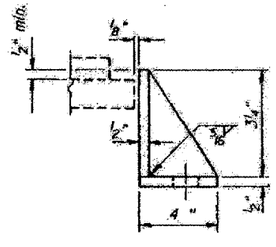

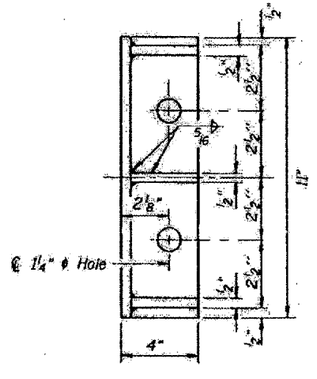

SIDE RETAINER

Equivalent rolled angle with stiffeners will be allowed in lieu of welded plates. Weight included with Structural Steel.

Notes:

Prior to ordering any material, the contractor shall verify in the field all bear height dimensions and shim thickness dimensions.

For anchor bolt installation details see sheet # 8 of 12.

New steel extensions, side retainers, connection bolts, anchor bolts, and shim plates are included in "Furnishing and Erecting Structural Steel".

DESIGNED	J.C.P.
CHECKED	
DRAWN	T.F.
CHECKED	

RC ENGINEERS, LTD.
CONSULTING ENGINEERS · SPRINGFIELD, ILLINOIS

BRIDGES NO. 8 AND NO. 9
STRUCTURES 064-0027 064-0028
FOR INFORMATION ONLY

ELASTOMERIC BEARING TYPE I, WEST ABUTMENT

SN 064-0027 & SN 064-0028 ELASTOMERIC BEARING TYPE I, PEDESTAL, WEST ABUTMENT

64(1,2,2-1,3-1,3)RS-1, BSMART FY2002-2

Tue Jul 17 13:26:57 2001
c:\projects\bsmart\064-0027\typibearwa27_28.dgn LV=1-63