SIGN DETAIL

1:50

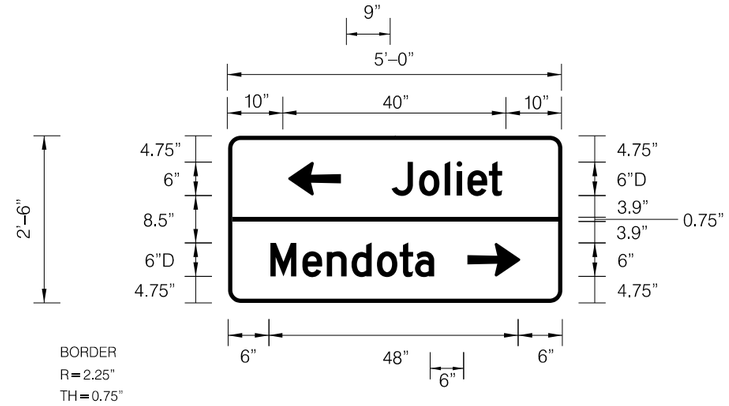

SIGN NUMBER	SB–WP(2)–106	
WIDTH x HGHT.	5'–0" x 2'–6"	
BORDER WIDTH	0.75"	
CORNER RADIUS	2.25"	
MOUNTING	Ground, STA. 6455+23	
BACKGROUND	TYPE:	Reflective
	COLOR:	Green
LEGEND/BORDER	TYPE:	Reflective
	COLOR:	White / White

SYMBOL	ROT	X	Y	WID	HT
AR_Type D	90	10.8	14.4	6	9
AR_Type D	270	43.0	4.8	6	9

Panel Style: guide_con_destination.ssi
Dimensions are in inches.tenths

Panel Style: guide_sign_distance.ssi
M.U.T.C.D.: 2009 Edition

Letter locations are panel edge to lower left corner

LETTER POSITIONS (X)																																				LENGTH	SERIES / SIZE
J	o	l	i	e	t																																D 2000
28.6	33.5	38.1	40.3	42.2	46.1																															19.9	6/4.4
M	e	n	d	o	t	a																															D 2000
6.8	12.5	16.9	21.4	25.9	30.0	32.8																														29.4	6/4.4