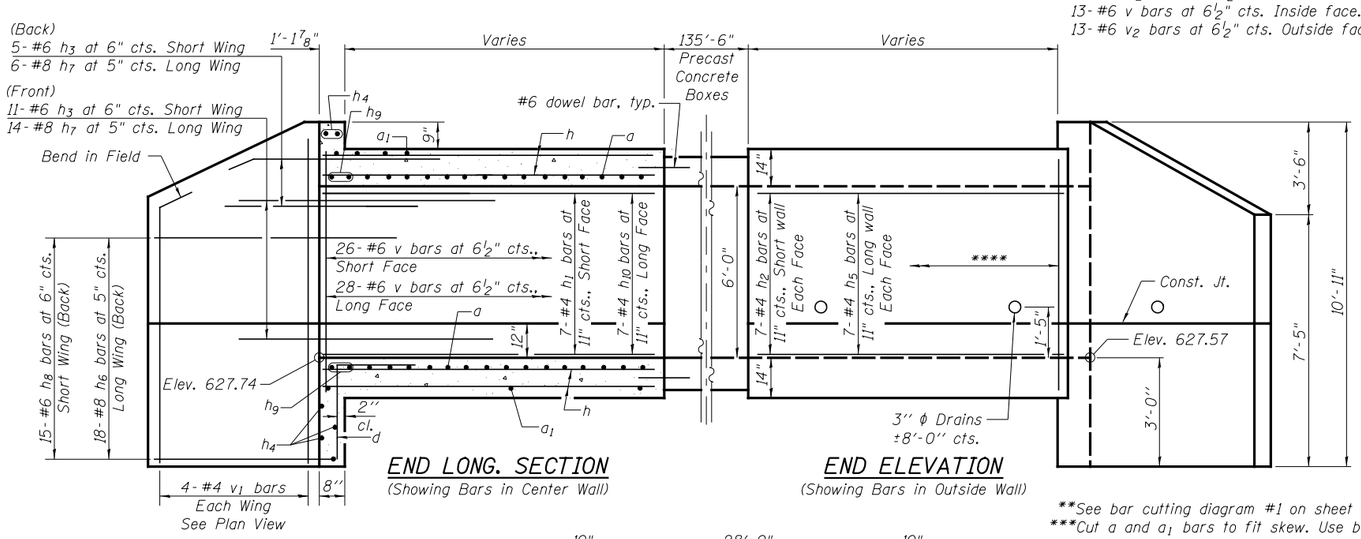

END LONG. SECTION
(Showing Bars in Center Wall)

END ELEVATION
(Showing Bars in Outside Wall)

****40- #6 v bars at 6 1/2" cts. Inside face. Long wall
40- #6 v2 bars at 6 1/2" cts. Outside face. Long wall
13- #6 v bars at 6 1/2" cts. Inside face. Short wall
13- #6 v2 bars at 6 1/2" cts. Outside face. Short wall

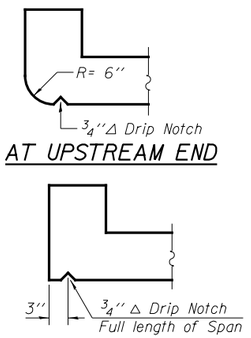

AT UPSTREAM END

AT DOWNSTREAM END

SECTION THRU HEADWALL

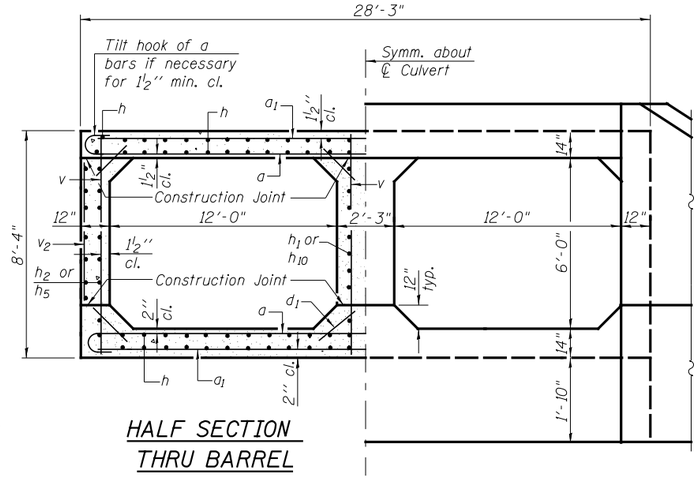

HALF SECTION THRU BARREL

HALF END ELEVATION

**See bar cutting diagram #1 on sheet 2 of 5.
***Cut a and a1 bars to fit skew. Use balance of bar in opposite end. Alternate hook location between headwall and sidewall.

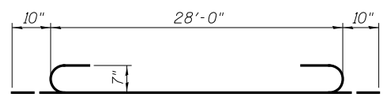

BAR a

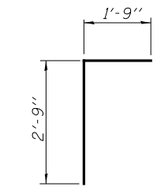

BAR d

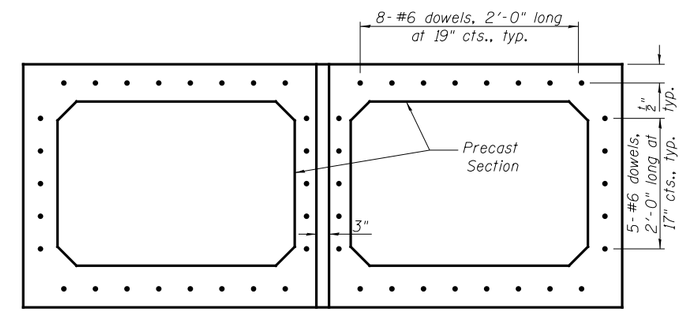

PRECAST CONCRETE CULVERT END ELEVATION
(Section is symmetrical about ℄ culvert)

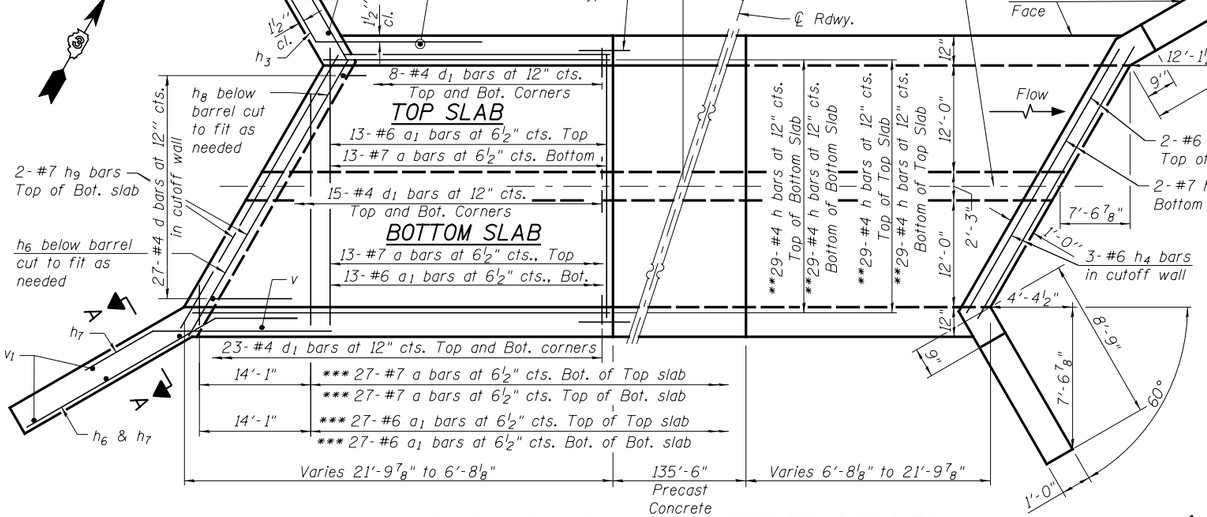

SHOWING REINFORCEMENT

SHOWING OUTLINES

PLAN

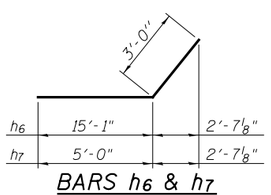

BARS h6 & h7

Notes:
A distance of half the length of the wingwall but not less than six feet of the barrel shall be poured monolithically with the wingwalls.
Drain holes shall conform to the requirements of Article 503.11 of the Standard Specifications. Cost shall be included in the cost of Concrete Box Culverts.

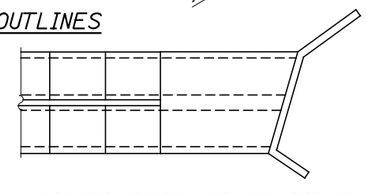

ALIGNED PRECAST SECTIONS

PLAN

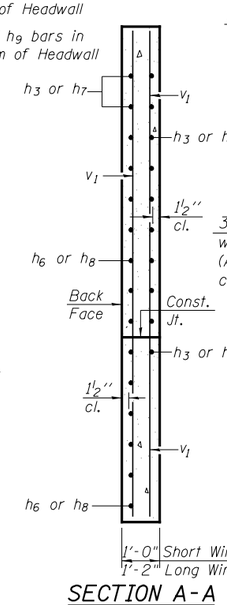

SECTION A-A

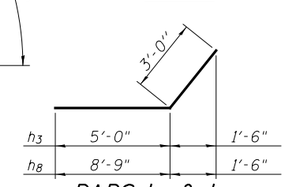

BARS h3 & h8

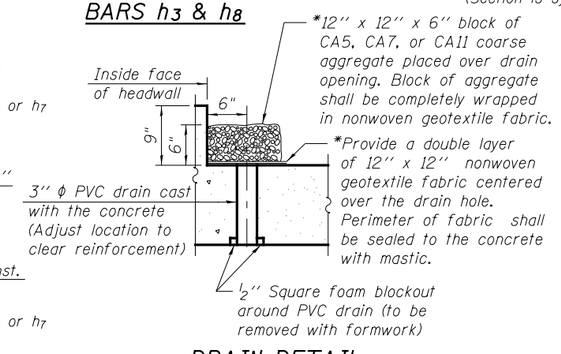

DRAIN DETAIL

(All costs associated with furnishing and constructing the above drain detail will not be measured for payment but shall be included in the contract unit price for the associated work.)

* Nonwoven geotextile fabric shall conform to the requirements of Article 1080.01 of the Standard Specifications. The minimum weight of the fabric shall be 6 ounces per square yard.

BILL OF MATERIAL

Bar	No.	Size	Length	Shape
a	106	#7	29'-8"	
a1	106	#6	28'-0"	
d	54	#4	4'-6"	
d1	244	#4	1'-4"	
h	116	#4	27'-9"	
h1	14	#4	13'-4"	
h2	28	#4	6'-4"	
h3	32	#6	8'-0"	
h4	10	#6	31'-6"	
h5	28	#4	21'-7"	
h6	36	#8	18'-1"	
h7	40	#8	8'-0"	
h8	30	#6	11'-9"	
h9	8	#7	32'-2"	
h10	14	#4	14'-5"	
v	218	#6	7'-8"	
v1	16	#4	10'-7"	
v2	106	#6	4'-8"	
Concrete Box Culverts			Cu. Yd.	122.7
Reinforcement Bars			Pound	22070

REVISED -	USER NAME =	DESIGNED - PSS	
REVISED -	FILE NAME =	CHECKED - VPT	
REVISED -	PLOT SCALE =	DRAWN - AJF	
REVISED -	PLOT DATE =	CHECKED - VPT	

LIN ENGINEERING, LTD.
Consulting Engineers
Springfield, Illinois

STATE OF ILLINOIS
DEPARTMENT OF TRANSPORTATION

CULVERT DETAILS
STRUCTURE NO. 047-2032

SHEET NO. 3 OF 5 SHEETS

F.A.P. RTE.	SECTION	COUNTY	TOTAL SHEETS	SHEET NO.
326	(109, 110)R-1	KENDALL	619	386
		CONTRACT NO. 66B84		
		ILLINOIS FED. AID PROJECT		