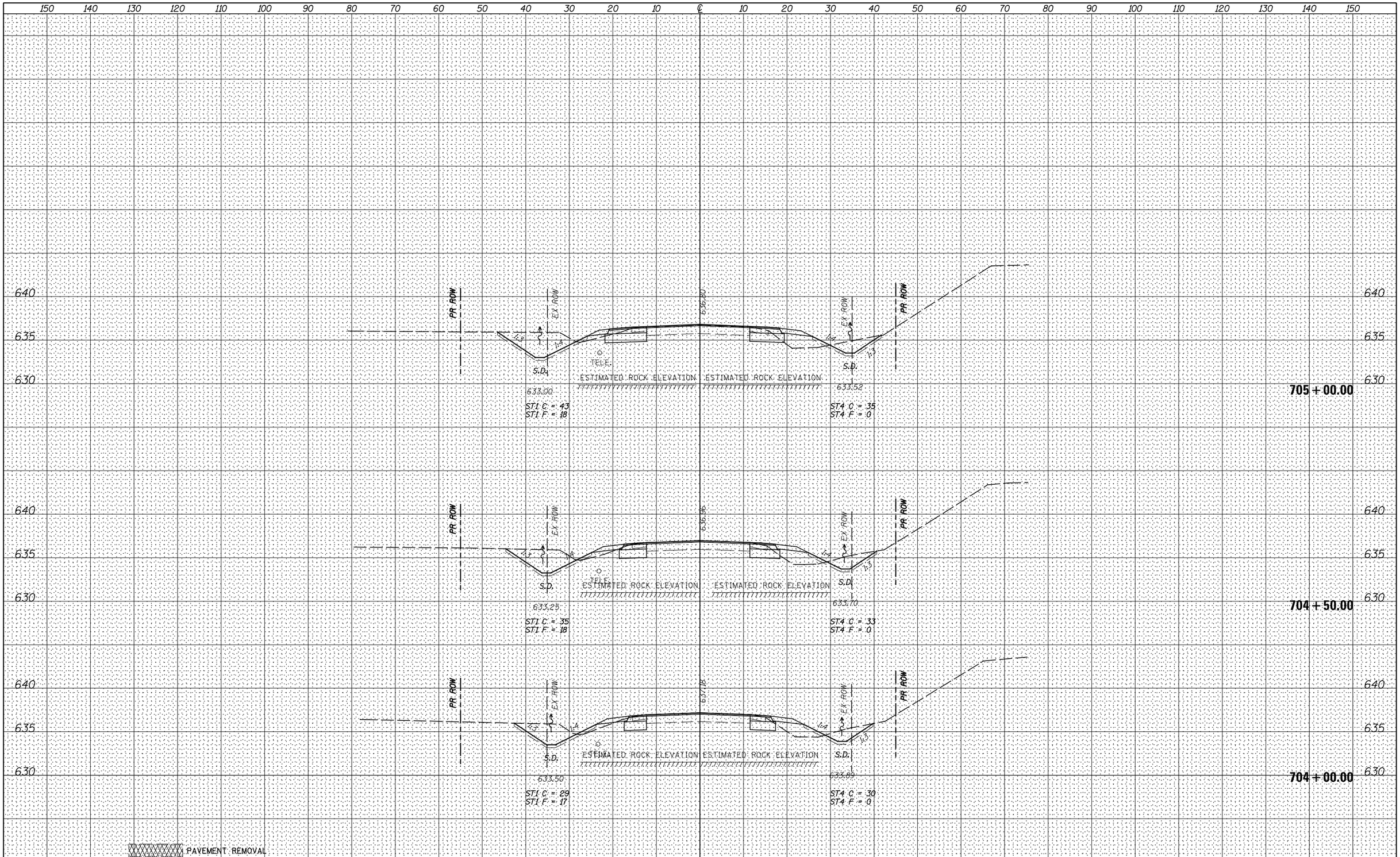

FINAL SURVEY		BY	DATE
NOTE BOOK NO.	SURVEYED		
	PLOTTED		
	TEMPLATE		
	AREAS		
	AREAS CHECKED		

ORIGINAL SURVEY		BY	DATE
NOTE BOOK NO.	SURVEYED		
	PLOTTED		
	TEMPLATE		
	AREAS		
	AREAS CHECKED		

FILE NAME = V:\3195\66B84 (North Section)\CADD Sheets\D366B84-sht-xssht-Joliet.dgn	USER NAME = bdecraene	DESIGNED - HLC	REVISED -
		DRAWN - HLC	REVISED -
	PLOT SCALE = 20.0000 ' / in.	CHECKED - CAS	REVISED -
$MODELNAME$	PLOT DATE = 7/14/2014	DATE - 7/01/2014	REVISED -

STATE OF ILLINOIS
DEPARTMENT OF TRANSPORTATION

JOLIET ROAD CROSS SECTIONS

SCALE: H=10 V=5 | SHEET 3 OF 6 SHEETS | STA. 704+00.00 TO STA. 705+00.00

F.A.P. RTE.	SECTION	COUNTY	TOTAL SHEETS	SHEET NO.
326	(109,110) R-1	KENDALL	619	581

CONTRACT NO. 66B84

ILLINOIS FED. AID PROJECT