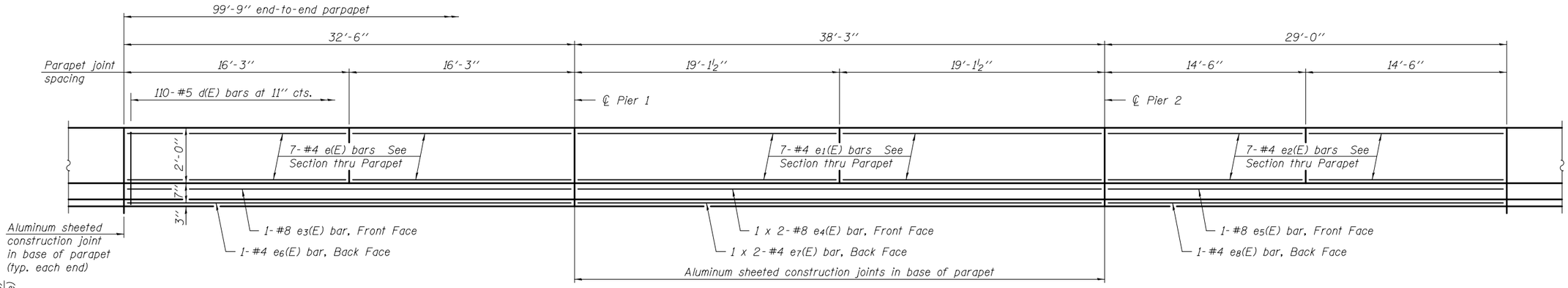

INSIDE ELEVATION OF PARAPET

(North parapets shown. South parapets similar)

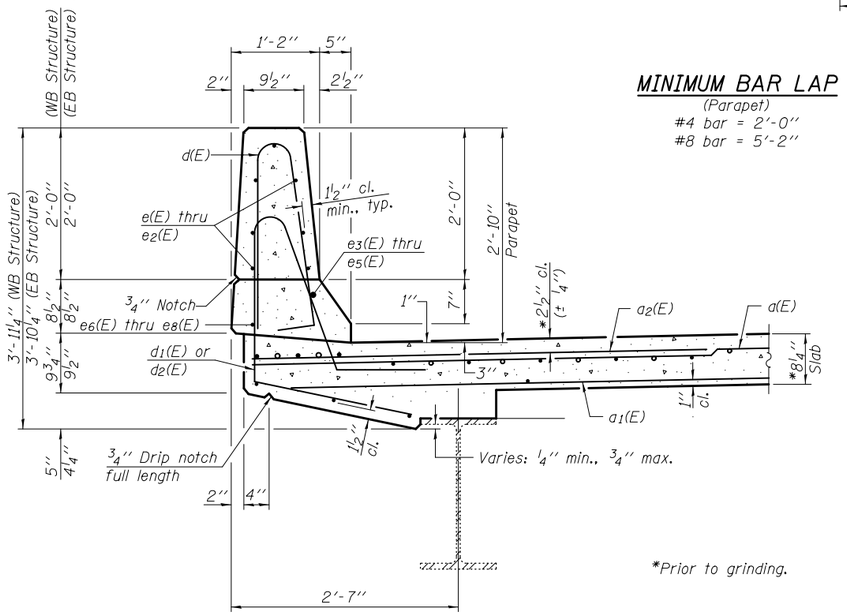

MINIMUM BAR LAP

(Parapet)
#4 bar = 2'-0"
#8 bar = 5'-2"

SECTION THRU PARAPET

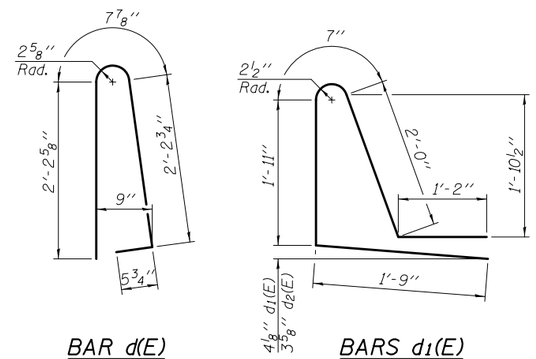

BAR d(E)

BARS d1(E) & d2(E)

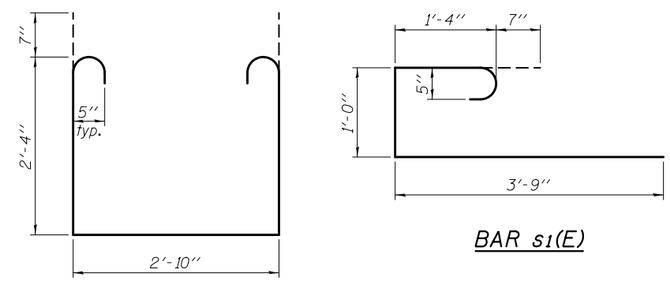

BAR s(E)

BAR s1(E)

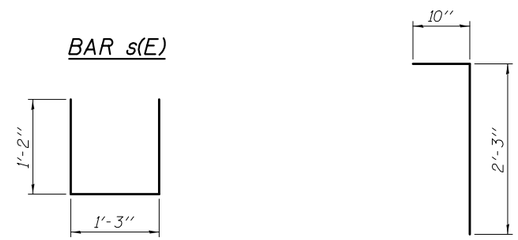

BAR u(E)

BAR v(E)

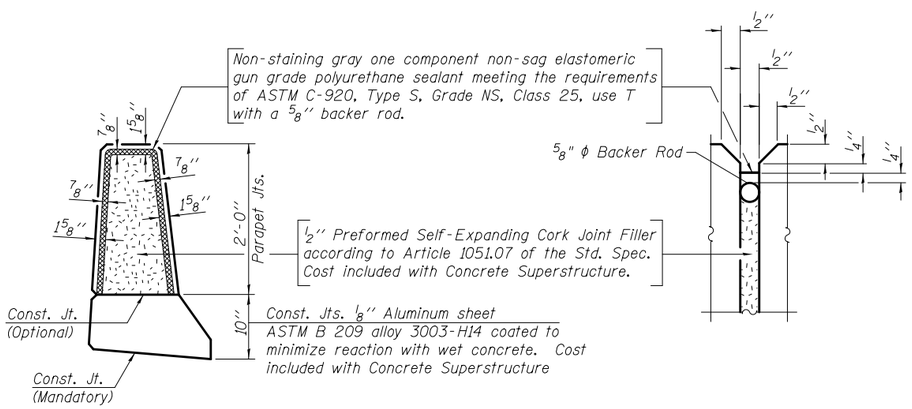

PARAPET JOINT DETAILS

SUPERSTRUCTURE BILL OF MATERIAL S.N. 018-0040 (EB)

Bar	No.	Size	Length	Shape
a(E)	141	#5	23'-2"	
a1(E)	141	#5	19'-2"	
a2(E)	142	#6	6'-6"	
a3(E)	119	#5	22'-3"	
a4(E)	119	#5	18'-3"	
a5(E)	4	#5	24'-11"	
a6(E)	4	#5	20'-7"	
b(E)	138	#5	34'-11"	
b1(E)	168	#5	26'-10"	
b2(E)	42	#6	22'-0"	
b3(E)	42	#6	20'-6"	
d(E)	220	#5	5'-7"	
d1(E)	220	#5	7'-5"	
e(E)	28	#4	16'-0"	
e1(E)	28	#4	18'-10"	
e2(E)	28	#4	14'-3"	
e3(E)	2	#8	32'-3"	
e4(E)	4	#8	21'-7"	
e5(E)	2	#8	28'-9"	
e6(E)	2	#4	32'-3"	
e7(E)	4	#4	20'-0"	
e8(E)	2	#4	28'-9"	
m(E)	20	#6	2'-5"	
m1(E)	50	#6	6'-6"	
m2(E)	10	#6	4'-4"	
m3(E)	14	#6	20'-9"	
m4(E)	14	#6	25'-1"	
s(E)	84	#5	8'-8"	
s1(E)	98	#5	6'-8"	
u(E)	88	#5	3'-7"	
v(E)	88	#5	3'-1"	
Reinforcement Bars, Epoxy Coated			Pound	33,470
Concrete Superstructure			Cu. Yds.	171.9

SUPERSTRUCTURE BILL OF MATERIAL S.N. 018-0041 (WB)

Bar	No.	Size	Length	Shape
a(E)	141	#5	23'-2"	
a1(E)	141	#5	19'-2"	
a2(E)	142	#6	6'-6"	
a3(E)	119	#5	22'-3"	
a4(E)	119	#5	18'-3"	
a5(E)	4	#5	24'-11"	
a6(E)	4	#5	20'-7"	
b(E)	138	#5	34'-11"	
b1(E)	168	#5	26'-10"	
b2(E)	42	#6	22'-0"	
b3(E)	42	#6	20'-6"	
d(E)	220	#5	5'-7"	
d2(E)	220	#5	7'-5"	
e(E)	28	#4	16'-0"	
e1(E)	28	#4	18'-10"	
e2(E)	28	#4	14'-3"	
e3(E)	2	#8	32'-3"	
e4(E)	4	#8	21'-7"	
e5(E)	2	#8	28'-9"	
e6(E)	2	#4	32'-3"	
e7(E)	4	#4	20'-0"	
e8(E)	2	#4	28'-9"	
m(E)	20	#6	2'-5"	
m1(E)	50	#6	6'-6"	
m2(E)	10	#6	4'-4"	
m3(E)	14	#6	20'-9"	
m4(E)	14	#6	25'-1"	
s(E)	84	#5	8'-8"	
s1(E)	98	#5	6'-8"	
u(E)	88	#5	3'-7"	
v(E)	88	#5	3'-1"	
Reinforcement Bars, Epoxy Coated			Pound	33,470
Concrete Superstructure			Cu. Yds.	174.3

Bars indicated thus 1 x 2-#8 etc. indicates 1 line of bars with 2 lengths per line.

DESIGNED - FESSEHA TEKLEHAIMANOT	EXAMINED	DATE - SEPTEMBER 16, 2014	STATE OF ILLINOIS DEPARTMENT OF TRANSPORTATION
CHECKED - JOSUE ORTIZ-VARELA	ACTING ENGINEER OF BRIDGE DESIGN		
DRAWN - MICHAEL B. MOSSMAN	PASSED	REVISED	
CHECKED - F.T. / J.O.V. / G.R.A.	ACTING ENGINEER OF BRIDGES AND STRUCTURES	REVISED	

SUPERSTRUCTURE DETAILS
STRUCTURE NO. 018 – 0040 (EB) & 018 – 0041 (WB)
SHEET NO. 16 OF 36 SHEETS

F.A.I. RTE.	SECTION	COUNTY	TOTAL SHEETS	SHEET NO.
70	(18-45HB-1)BR	CUMBERLAND	43	23
		CONTRACT NO. 74187		
		ILLINOIS FED. AID PROJECT		