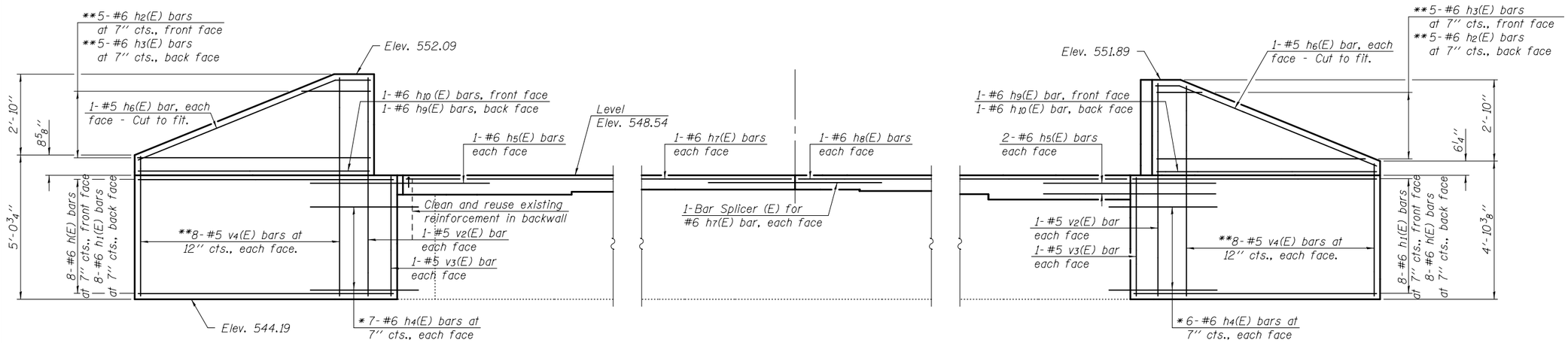

ELEVATION
(Looking west)

* Epoxy grout $h_4(E)$ bars in 9'' min. drilled holes according to Section 584 of the Standard Specifications. All grouted bars shall have 4'' cl. to the edge of existing concrete.

** See Field Cutting Diagram.

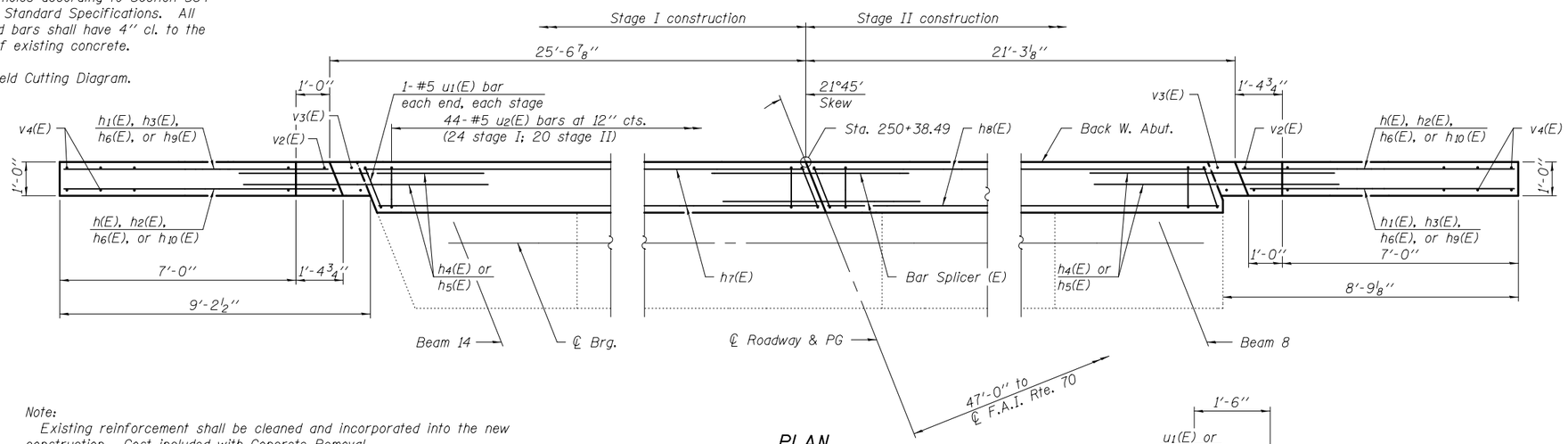

PLAN

Note:
Existing reinforcement shall be cleaned and incorporated into the new construction. Cost included with Concrete Removal.

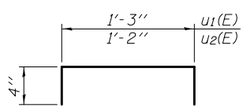

BARS $u_1(E)$ & $u_2(E)$

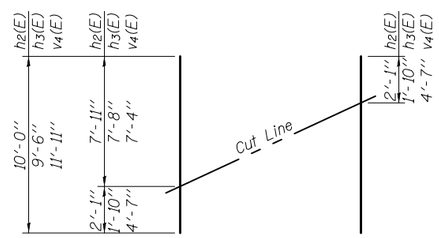

FIELD CUTTING DIAGRAM

Order $v_4(E)$ full length. Cut as shown and use remainder of bars in opposite face.

Order $h_2(E)$ and $h_3(E)$ full length. Cut as shown and use remainder of bars in opposite face of opposite wingwall.

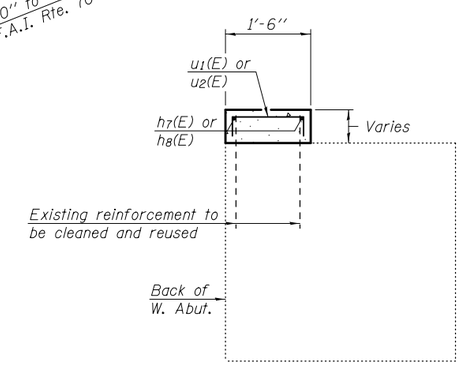

SECTION THRU ABUTMENT

BILL OF MATERIAL

Bar	No.	Size	Length	Shape
h(E)	16	#6	8'-10''	
$h_1(E)$	16	#6	8'-6''	
$h_2(E)$	5	#6	10'-0''	
$h_3(E)$	5	#6	9'-6''	
$h_4(E)$	26	#6	4'-0''	
$h_5(E)$	6	#6	6'-4''	
$h_6(E)$	4	#5	8'-9''	
$h_7(E)$	2	#6	24'-5''	
$h_8(E)$	2	#6	20'-2''	
$h_9(E)$	2	#6	7'-8''	
$h_{10}(E)$	2	#6	8'-1''	
$u_1(E)$	4	#5	1'-11''	
$u_2(E)$	44	#5	1'-10''	
$v_2(E)$	4	#5	7'-5''	
$v_3(E)$	4	#5	4'-1''	
$v_4(E)$	16	#5	11'-11''	
Structure Excavation			Cu. Yd.	96
Concrete Structures			Cu. Yd.	5.8
Reinforcement Bars, Epoxy Coated			Pound	1,330

DESIGNED - FESSEHA TEKLEHAIMANOT	EXAMINED	DATE - SEPTEMBER 16, 2014	STATE OF ILLINOIS DEPARTMENT OF TRANSPORTATION
CHECKED - JOSUE ORTIZ-VARELA	ACTING ENGINEER OF BRIDGE DESIGN		
DRAWN - MICHAEL B. MOSSMAN	PASSED	REVISED	
CHECKED - F.T. / J.O.V. / G.R.A.	ACTING ENGINEER OF BRIDGES AND STRUCTURES	REVISED	

WEST ABUTMENT
STRUCTURE NO. 018 – 0040 (EB)
SHEET NO. 33 OF 36 SHEETS

F.A.I. RTE.	SECTION	COUNTY	TOTAL SHEETS	SHEET NO.
70	(18-45HB-1)BR	CUMBERLAND	43	40
		CONTRACT NO. 74187		
	ILLINOIS FED. AID PROJECT			