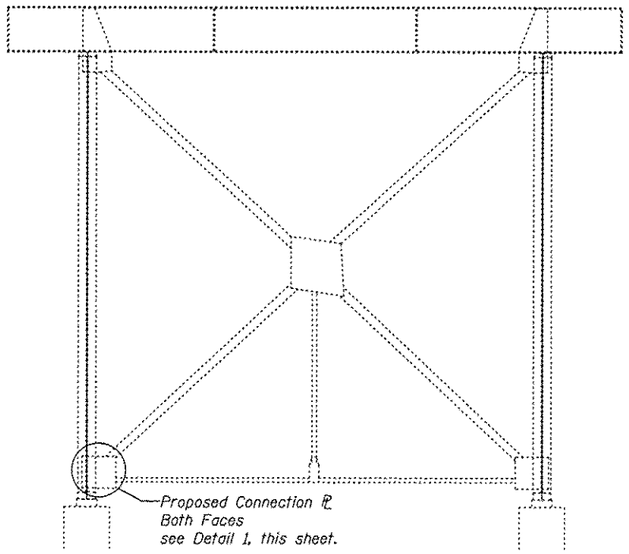

BENT 29
(Looking East)

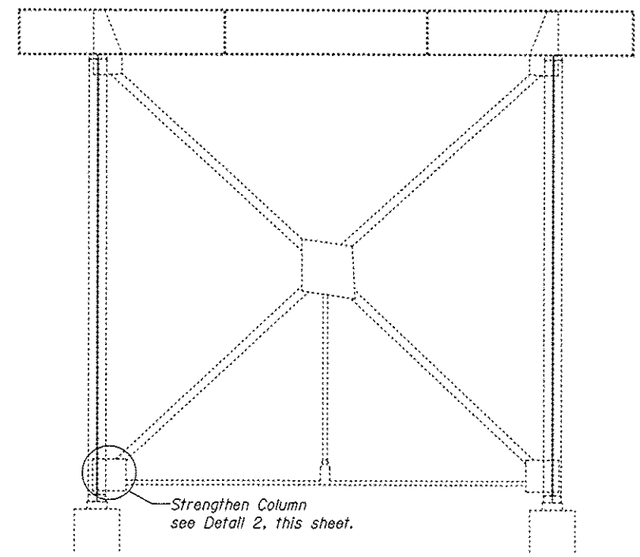

BENT 30
(Looking East)

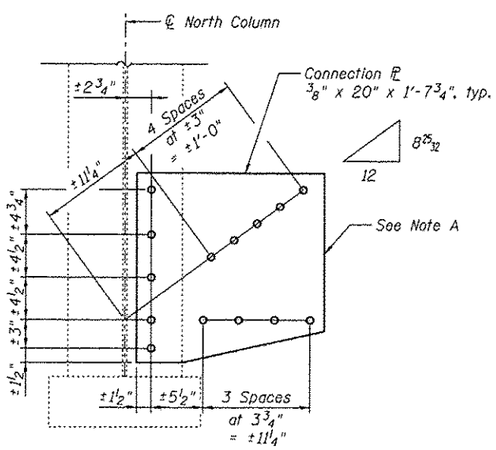

DETAIL 1
(West ℙ shown, East ℙ similar)

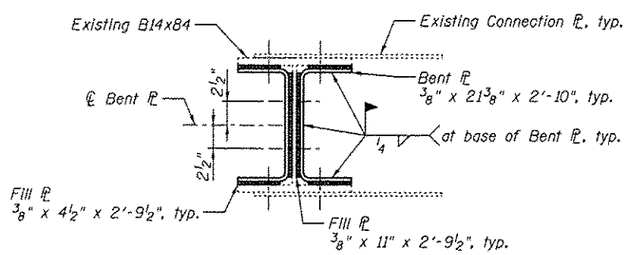

SECTION A-A

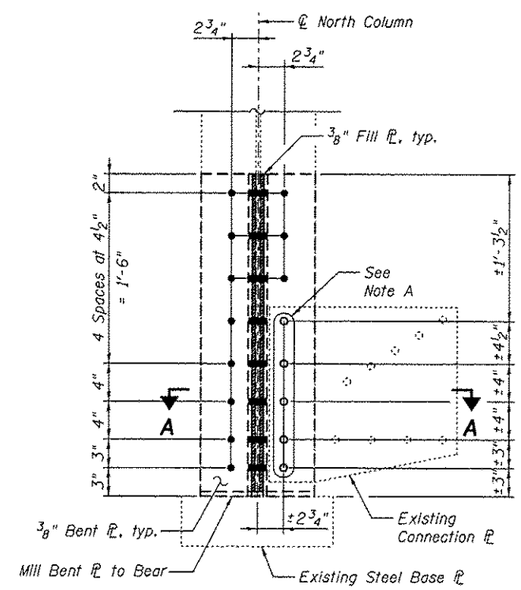

DETAIL 2

BILL OF MATERIAL

Item	Unit	Total
Structural Steel Repair	Pound	430

Note A:
Field drill holes using existing holes as template.
Remainder of holes may be shop or field drilled.

Note:
All bolted connections shown on this sheet shall be made with ¾" dia. H.S. bolts.

MODJESKI and MASTERS Experience great bridges.	USER NAME =	DESIGNED - YSS	REVISED
		CHECKED - ZJB	REVISED
	PLOT SCALE =	DRAWN - AEC	REVISED
	PLOT DATE = 03/20/2014	CHECKED - YSS	REVISED

STATE OF ILLINOIS
DEPARTMENT OF TRANSPORTATION

ILLINOIS APPROACH BENTS 29 AND 30 REPAIRS
S.N. 082-6001 MLK BRIDGE OVER MISSISSIPPI RIVER

SHEET NO. S123 OF S138 SHEETS

F.A.P. RTE.	SECTION	COUNTY	TOTAL SHEETS	SHEET NO.
799	1BR, DRS-2	ST. CLAIR	156	141
		CONTRACT NO. 76B03		
		ILLINOIS FED. AID PROJECT		