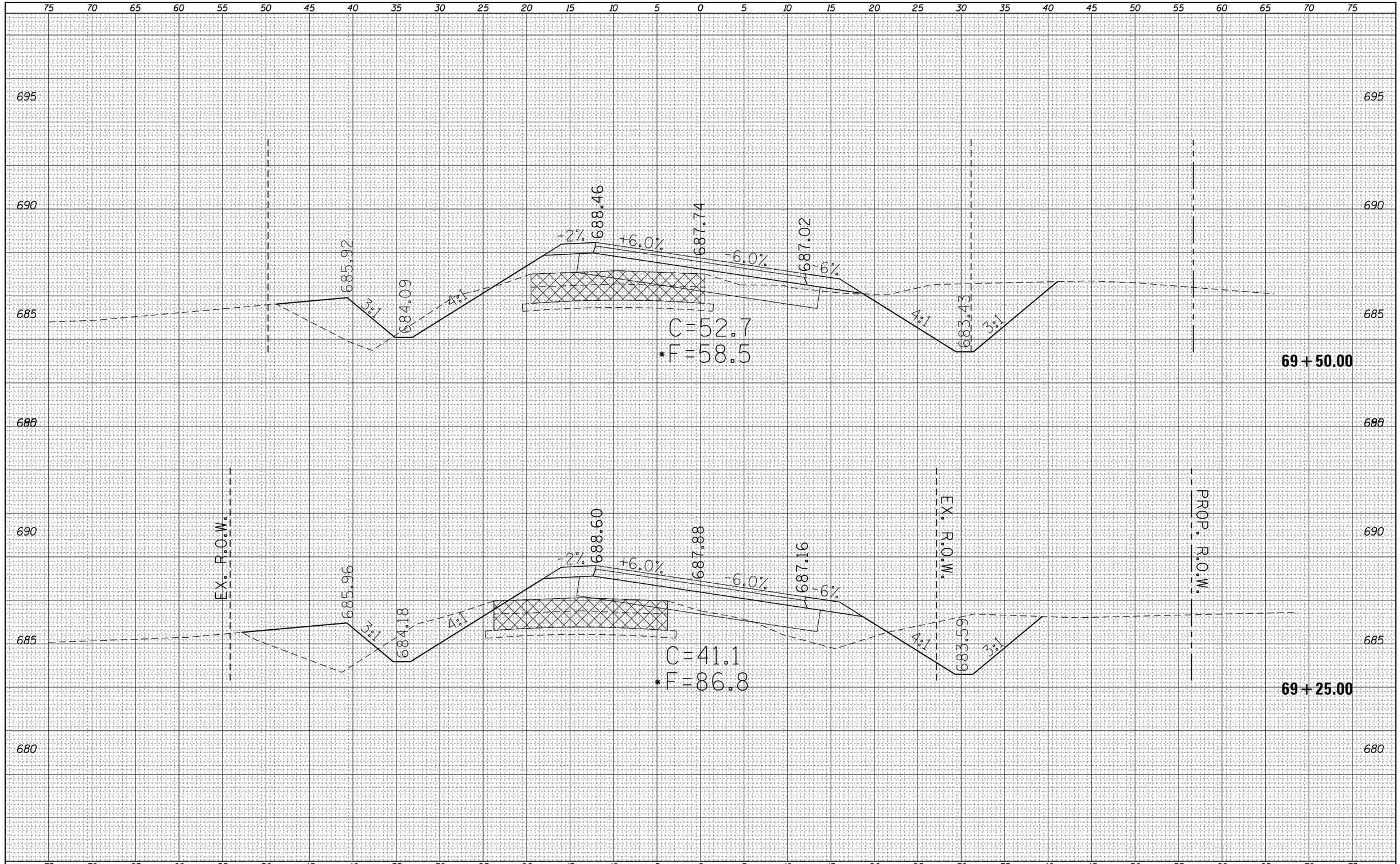

FINAL SURVEY	
NOTE BOOK	
NO.	

	BY	DATE
SURVEYED		
PLOTTED		
TEMPLATE		
AREAS		
AREAS CHECKED		

ORIGINAL SURVEY	
NOTE BOOK	
NO.	

	BY	DATE
SURVEYED		
PLOTTED		
TEMPLATE		
AREAS		
AREAS CHECKED		

FILE NAME = c:\pw_work\pwidot\steffenmk\d0158776\D774423-xsc-sht-PRHarrisonB.dgn	USER NAME = steffenmk	DESIGNED -	REVISED -
		DRAWN -	REVISED -
	PLOT SCALE = 10.0000 ' / in.	CHECKED -	REVISED -
Default	PLOT DATE = 5/7/2014	DATE -	REVISED -

STATE OF ILLINOIS
DEPARTMENT OF TRANSPORTATION

CROSS SECTIONS
E. HARRISON B

SCALE: 5 | SHEET 34 OF 41 SHEETS | STA. 69+25.00 | TO STA. 69+500.00

F.A.P. RTE.	SECTION	COUNTY	TOTAL SHEETS	SHEET NO.
91	5N	Coles	271	201

CONTRACT NO. 74423

ILLINOIS FED. AID PROJECT

FINAL SURVEY	NOTE BOOK	NO.
SURVEYED		
PLOTTED		
TEMPLATE		
AREAS		
AREAS CHECKED		

BY	DATE

ORIGINAL SURVEY	NOTE BOOK	NO.
SURVEYED		
PLOTTED		
TEMPLATE		
AREAS		
AREAS CHECKED		

BY	DATE

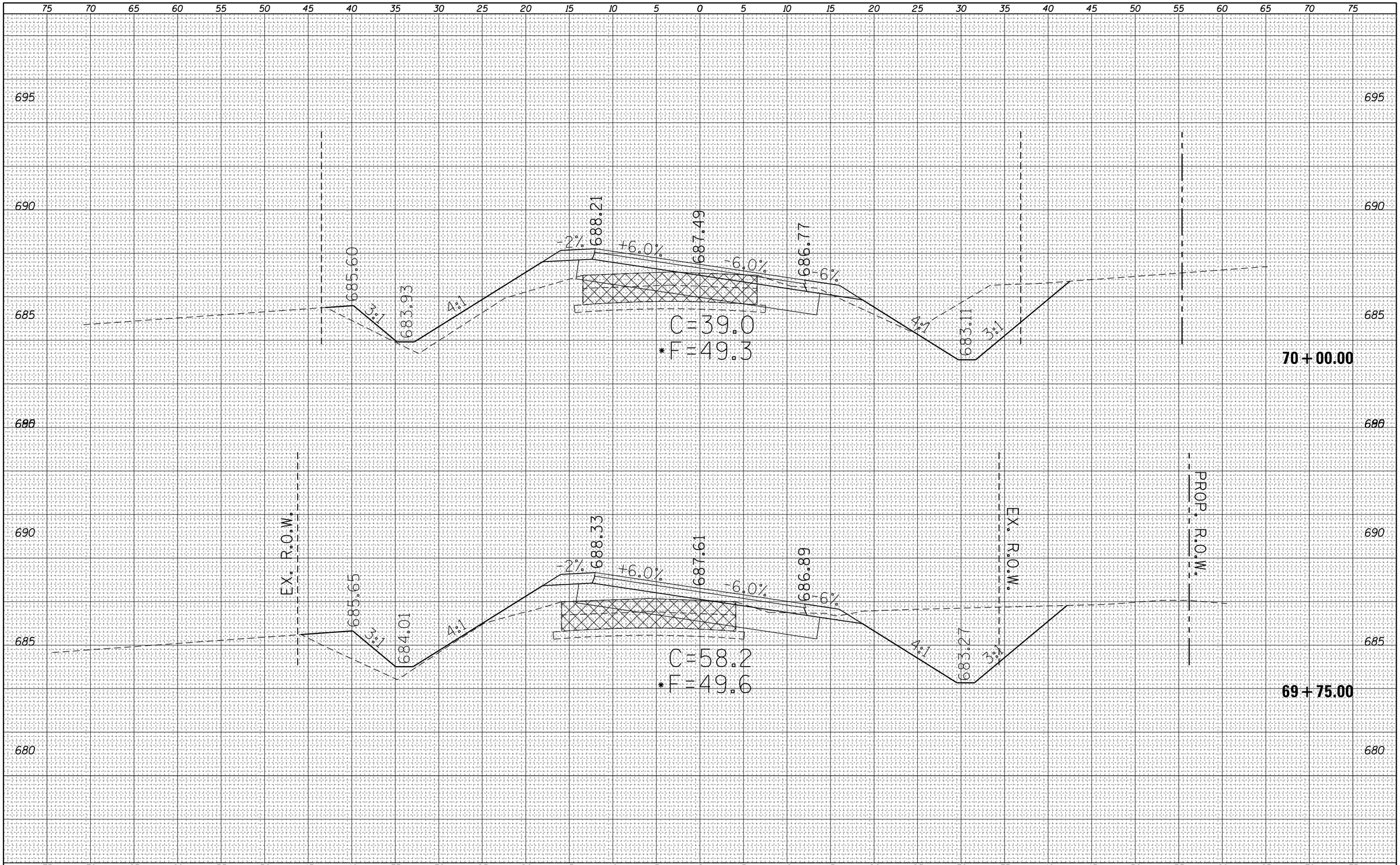

FILE NAME = c:\pw_work\pwidot\steffenmk\d0158776\D774423-xsc-sht-PRHarrisonB.dgn	USER NAME = steffenmk	DESIGNED -	REVISED -
		DRAWN -	REVISED -
	PLOT SCALE = 10.0000 ' / in.	CHECKED -	REVISED -
Default	PLOT DATE = 5/7/2014	DATE -	REVISED -

STATE OF ILLINOIS
DEPARTMENT OF TRANSPORTATION

CROSS SECTIONS
E. HARRISON B

SCALE: 5 | SHEET 35 OF 41 SHEETS | STA. 69+75.00 | TO STA. 70+00.00

F.A.P. RTE.	SECTION	COUNTY	TOTAL SHEETS	SHEET NO.
91	5N	Coles	271	202
		CONTRACT NO. 74423		
		ILLINOIS FED. AID PROJECT		

FINAL SURVEY	BY	DATE
SURVEYED		
PLOTTED		
TEMPLATE		
NOTE BOOK		
AREAS		
NO.	AREAS CHECKED	

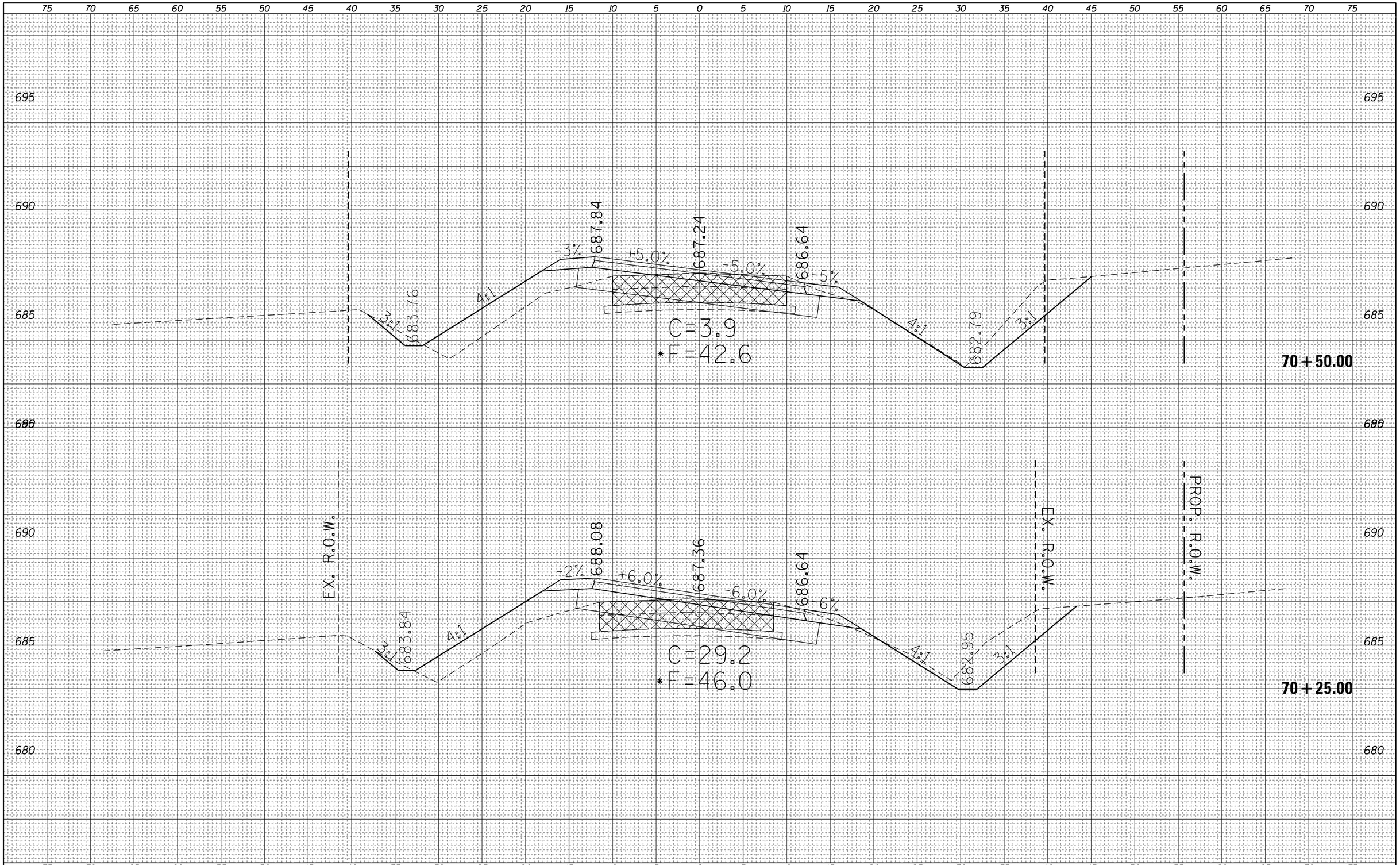

ORIGINAL SURVEY	BY	DATE
SURVEYED		
PLOTTED		
TEMPLATE		
NOTE BOOK		
AREAS		
NO.	AREAS CHECKED	

FILE NAME =	USER NAME = steffenmk	DESIGNED -	REVISED -
c:\pw_work\pwidot\steffenmk\d0158776\D774423-xsc-sht-PRHarrisonB.dgn		DRAWN -	REVISED -
	PLOT SCALE = 10.0000 ' / in.	CHECKED -	REVISED -
Default	PLOT DATE = 5/7/2014	DATE -	REVISED -

STATE OF ILLINOIS
DEPARTMENT OF TRANSPORTATION

CROSS SECTIONS
E. HARRISON B

SCALE: 5 | SHEET 36 OF 41 SHEETS | STA. 70+25.00 | TO STA. 70+50.00

F.A.P. RTE.	SECTION	COUNTY	TOTAL SHEETS	SHEET NO.
91	5N	Coles	271	203
		CONTRACT NO. 74423		
		ILLINOIS FED. AID PROJECT		

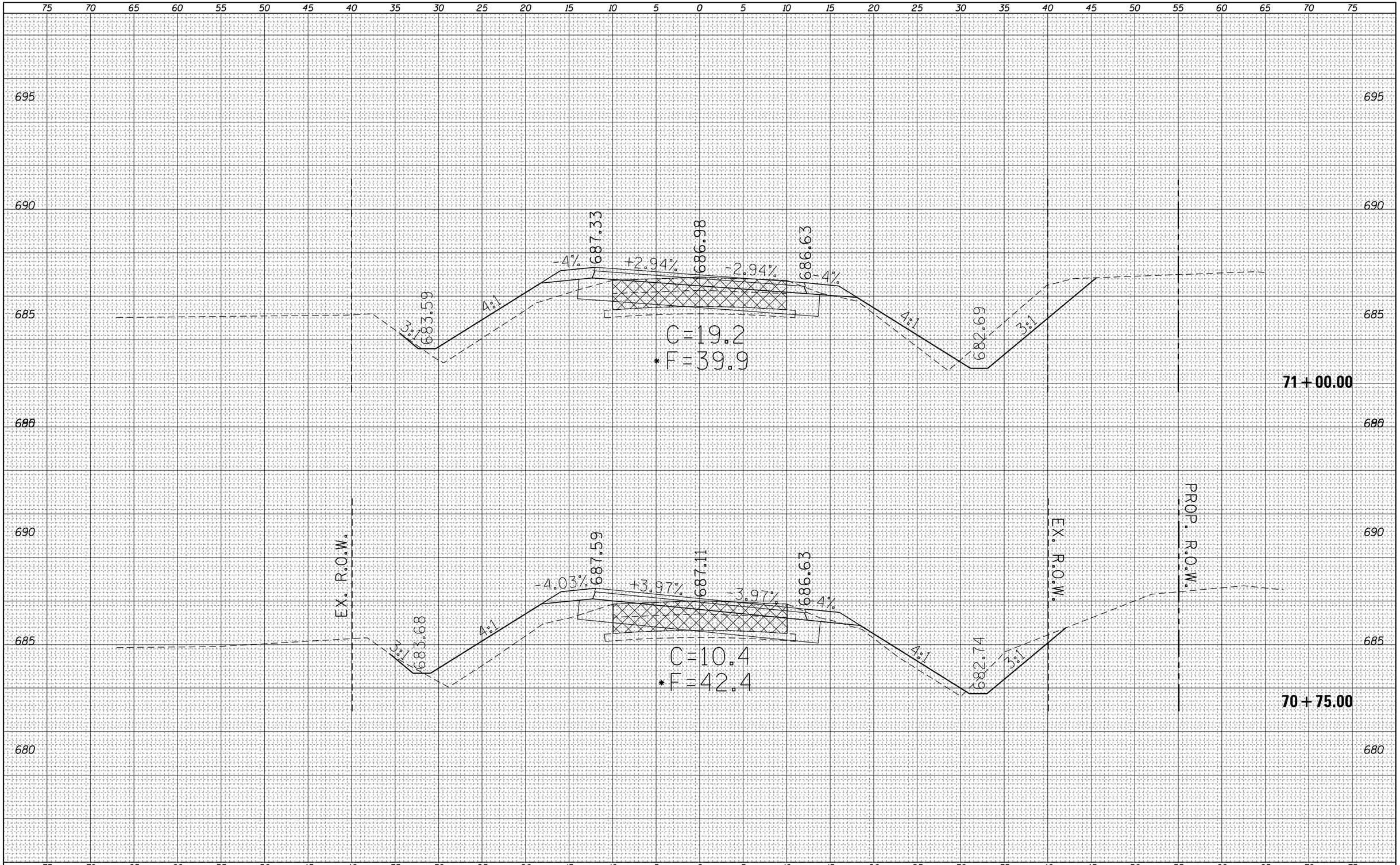

FINAL SURVEY		BY	DATE
NOTE BOOK	SURVEYED		
NO.	PLOTTED		
	TEMPLATE		
	AREAS		
	AREAS CHECKED		

ORIGINAL SURVEY		BY	DATE
NOTE BOOK	SURVEYED		
NO.	PLOTTED		
	TEMPLATE		
	AREAS		
	AREAS CHECKED		

FILE NAME = c:\pw_work\pwidot\steffenmk\d0158776\D774423-sc-sht-PRHarrisonB.dgn	USER NAME = steffenmk	DESIGNED -	REVISED -
		DRAWN -	REVISED -
	PLOT SCALE = 10.0000 ' / in.	CHECKED -	REVISED -
Default	PLOT DATE = 5/7/2014	DATE -	REVISED -

STATE OF ILLINOIS
DEPARTMENT OF TRANSPORTATION

CROSS SECTIONS
E. HARRISON B

SCALE: 5 | SHEET 37 OF 41 SHEETS | STA. 70+75.00 TO STA. 71+00.00

F.A.P. RTE.	SECTION	COUNTY	TOTAL SHEETS	SHEET NO.
91	5N	Coles	271	204

CONTRACT NO. 74423

ILLINOIS FED. AID PROJECT

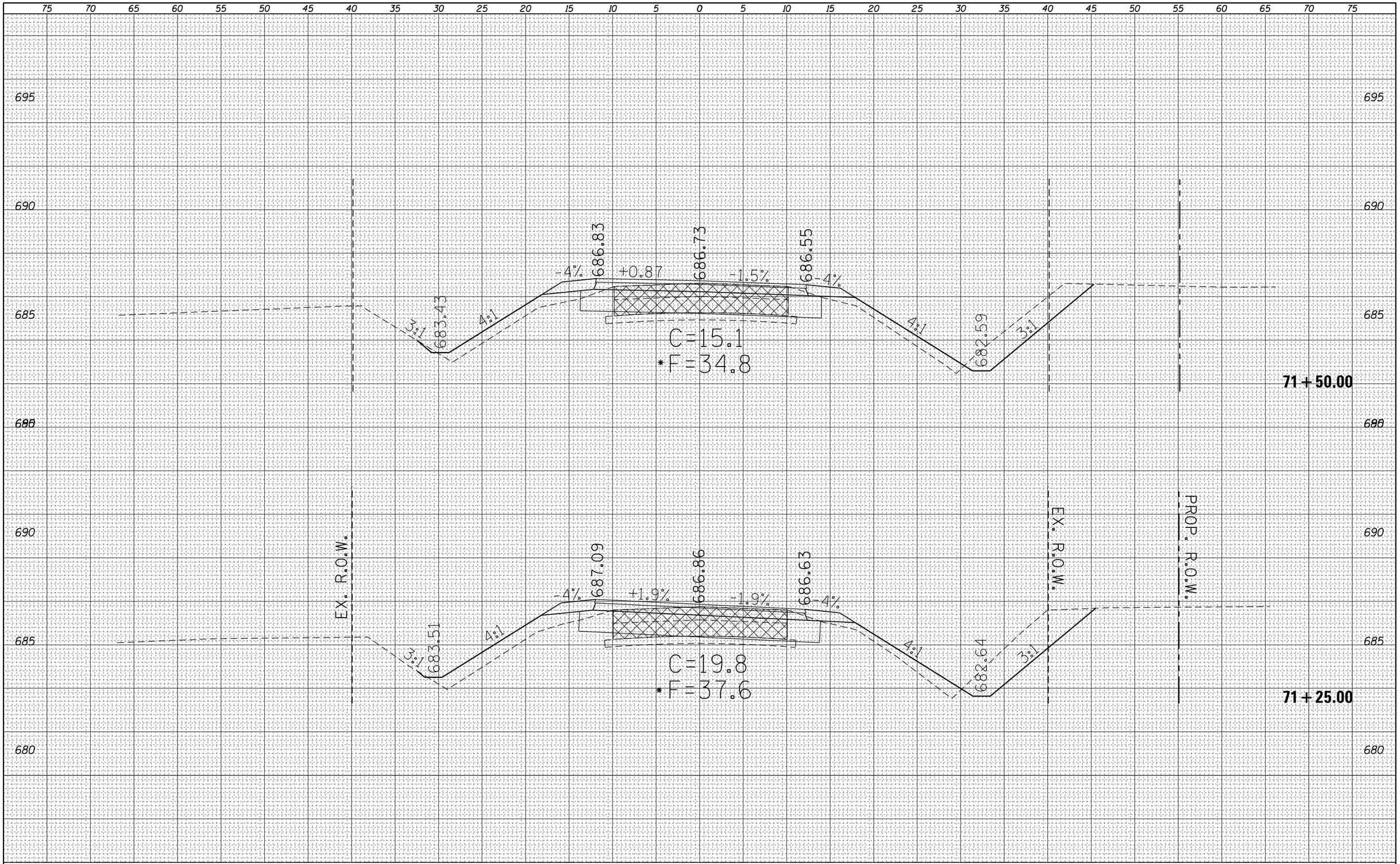

FINAL SURVEY

NO.	NOTE BOOK	SURVEYED	BY
		PLOTTED	
		TEMPLATE	
		AREAS	DATE
		AREAS CHECKED	

ORIGINAL SURVEY

NO.	NOTE BOOK	SURVEYED	BY
		PLOTTED	
		TEMPLATE	
		AREAS	DATE
		AREAS CHECKED	

FILE NAME = c:\pw_work\pwidot\steffenmk\d0158776\D774423-xsc-sht-PRHarrisonB.dgn	USER NAME = steffenmk	DESIGNED -	REVISED -
		DRAWN -	REVISED -
	PLOT SCALE = 10.0000 ' / in.	CHECKED -	REVISED -
Default	PLOT DATE = 5/7/2014	DATE -	REVISED -

STATE OF ILLINOIS
DEPARTMENT OF TRANSPORTATION

CROSS SECTIONS
E. HARRISON B

SCALE: 5 | SHEET 38 OF 41 SHEETS | STA. 71+25.00 | TO STA. 71+50.00

F.A.P. RTE.	SECTION	COUNTY	TOTAL SHEETS	SHEET NO.
91	5N	Coles	271	205

CONTRACT NO. 74423

ILLINOIS | FED. AID PROJECT

FINAL SURVEY	NOTE BOOK	NO.
	SURVEYED	
	PLOTTED	
	TEMPLATE	
	AREAS	
	AREAS CHECKED	

BY	DATE

ORIGINAL SURVEY	NOTE BOOK	NO.
	SURVEYED	
	PLOTTED	
	TEMPLATE	
	AREAS	
	AREAS CHECKED	

BY	DATE

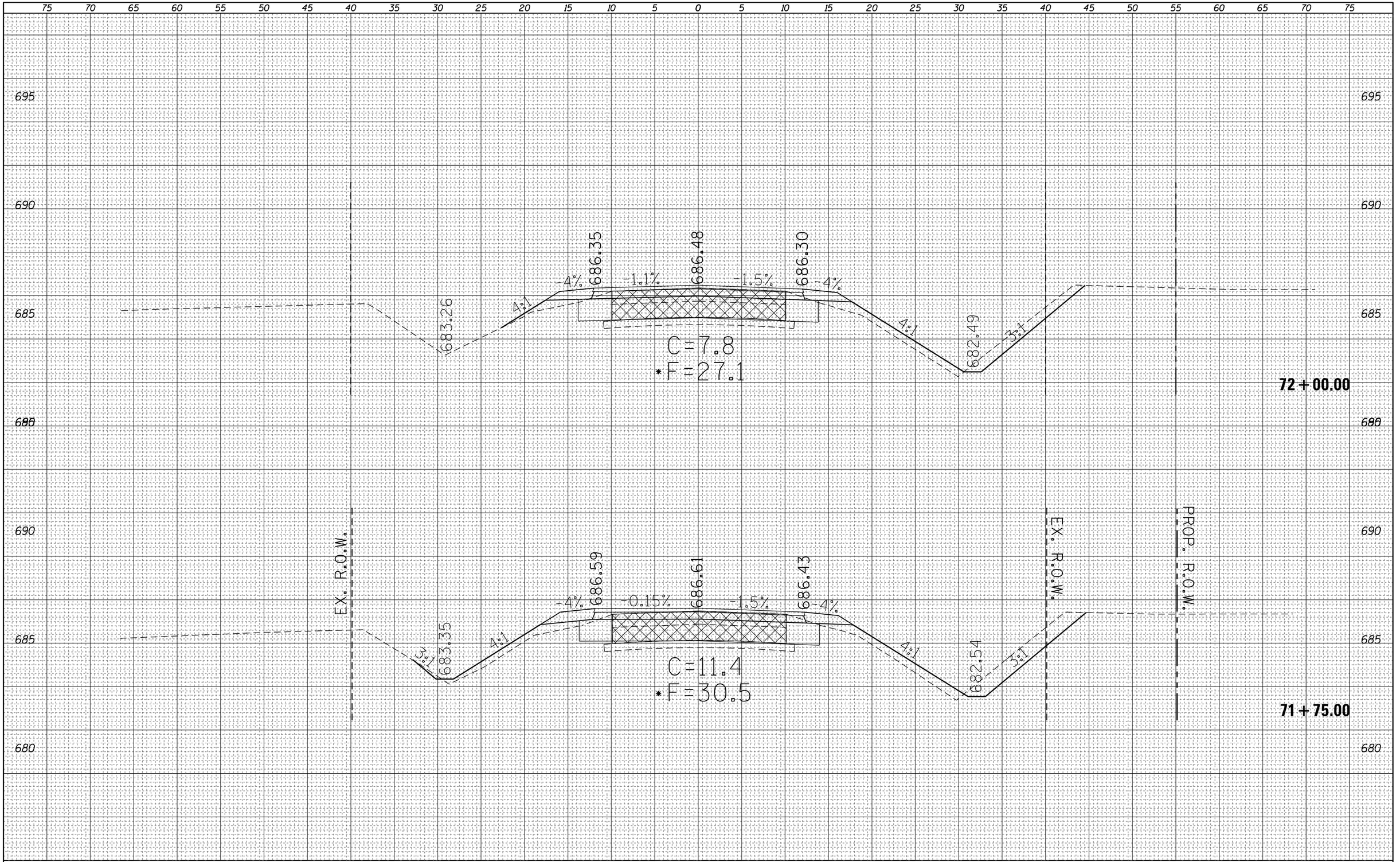

FILE NAME =	USER NAME = steffenmk	DESIGNED -	REVISED -
c:\pw_work\pwidot\steffenmk\d0158776\D774423-sht-PRHarrisonB.dgn		DRAWN -	REVISED -
	PLOT SCALE = 10.0000 ' / in.	CHECKED -	REVISED -
Default	PLOT DATE = 5/7/2014	DATE -	REVISED -

STATE OF ILLINOIS
DEPARTMENT OF TRANSPORTATION

CROSS SECTIONS
E. HARRISON B

SCALE: 5 | SHEET 39 OF 41 SHEETS | STA. 71+75.00 | TO STA. 72+00.00

F.A.P. RTE.	SECTION	COUNTY	TOTAL SHEETS	SHEET NO.
91	5N	Coles	271	206

CONTRACT NO. 74423

ILLINOIS FED. AID PROJECT

FINAL SURVEY	NOTE BOOK	NO.
	SURVEYED	
	PLOTTED	
	TEMPLATE	
	AREAS	
	AREAS CHECKED	

BY	DATE

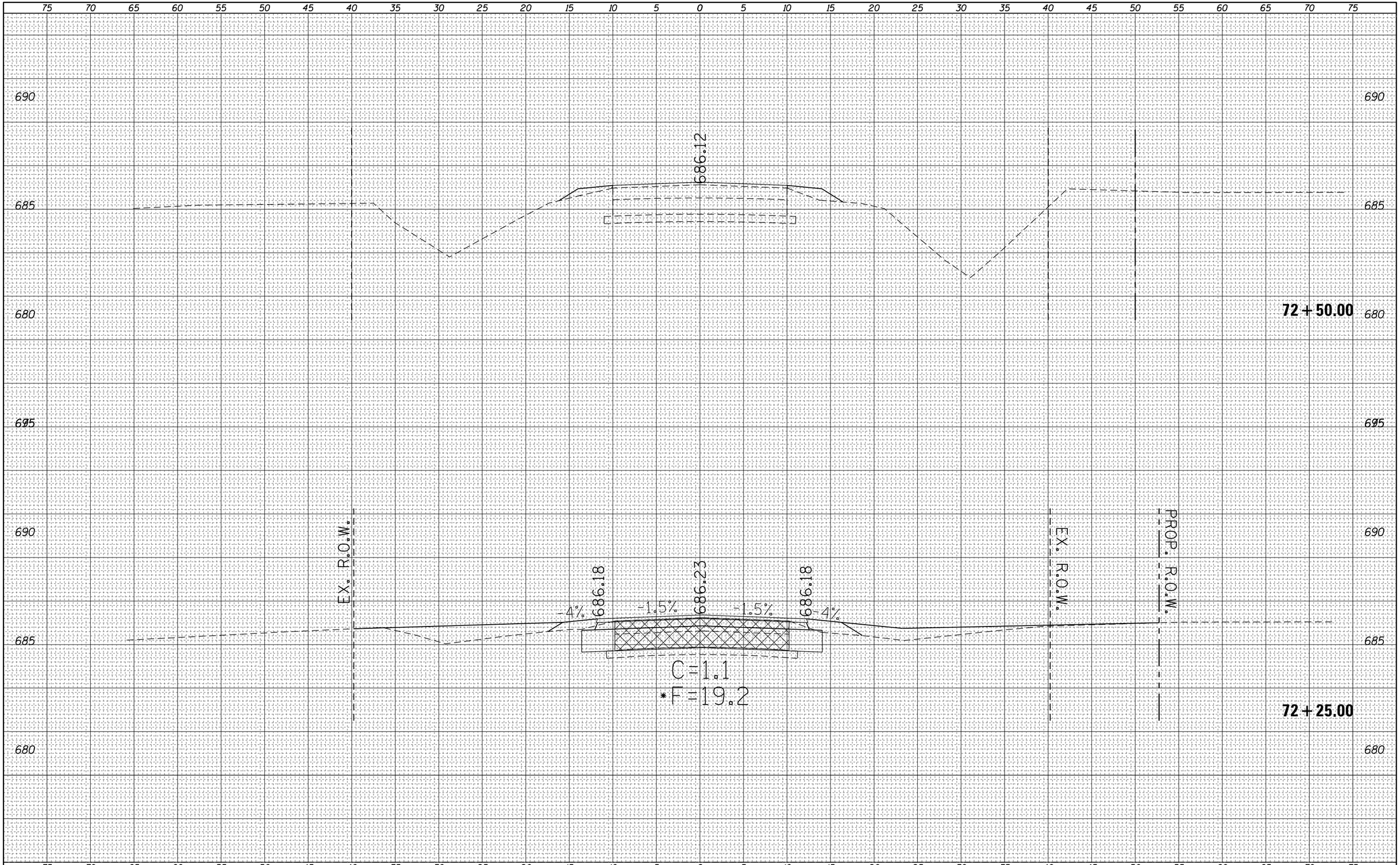

ORIGINAL SURVEY	NOTE BOOK	NO.
	SURVEYED	
	PLOTTED	
	TEMPLATE	
	AREAS	
	AREAS CHECKED	

BY	DATE

FILE NAME =	USER NAME = steffenmk	DESIGNED -	REVISED -
c:\pw_work\pwidot\steffenmk\d0158776\D774423-sht-PRHarrisonB.dgn		DRAWN -	REVISED -
	PLOT SCALE = 10.0000 ' / in.	CHECKED -	REVISED -
Default	PLOT DATE = 5/7/2014	DATE -	REVISED -

STATE OF ILLINOIS
DEPARTMENT OF TRANSPORTATION

CROSS SECTIONS
E. HARRISON B

SCALE: 5 | SHEET 40 OF 41 SHEETS | STA. 72+25.00 | TO STA. 72+50.00

F.A.P. RTE.	SECTION	COUNTY	TOTAL SHEETS	SHEET NO.
91	5N	Coles	271	207

CONTRACT NO. 74423

ILLINOIS FED. AID PROJECT

FINAL SURVEY	NOTE BOOK	NO.
SURVEYED	BY	DATE
PLOTTED		
TEMPLATE		
AREAS		
AREAS CHECKED		

75 70 65 60 55 50 45 40 35 30 25 20 15 10 5 0 5 10 15 20 25 30 35 40 45 50 55 60 65 70 75

695 695

690 690

685 685

680 680

EX. R.O.W.

10.988

EX. R.O.W.

PROP. R.O.W.

72+75.00

75 70 65 60 55 50 45 40 35 30 25 20 15 10 5 0 5 10 15 20 25 30 35 40 45 50 55 60 65 70 75

ORIGINAL SURVEY	NOTE BOOK	NO.
SURVEYED	BY	DATE
PLOTTED		
TEMPLATE		
AREAS		
AREAS CHECKED		

FILE NAME = c:\pw_work\pwidot\steffenmk\d0158776\D774423-sht-PRHarrisonB.dgn	USER NAME = steffenmk	DESIGNED -	REVISED -
		DRAWN -	REVISED -
	PLOT SCALE = 10.0000 ' / in.	CHECKED -	REVISED -
Default	PLOT DATE = 5/7/2014	DATE -	REVISED -

STATE OF ILLINOIS
DEPARTMENT OF TRANSPORTATION

CROSS SECTIONS
E. HARRISON B

SCALE: 5 | SHEET 41 OF 41 SHEETS | STA. 72+75.00 | TO STA. 72+75.00

F.A.P. RTE.	SECTION	COUNTY	TOTAL SHEETS	SHEET NO.
91	5N	Coles	271	208

CONTRACT NO. 74423

ILLINOIS FED. AID PROJECT

FINAL SURVEY	NOTE BOOK	NO.
SURVEYED		
PLOTTED		
TEMPLATE		
AREAS		
AREAS CHECKED		

BY	DATE

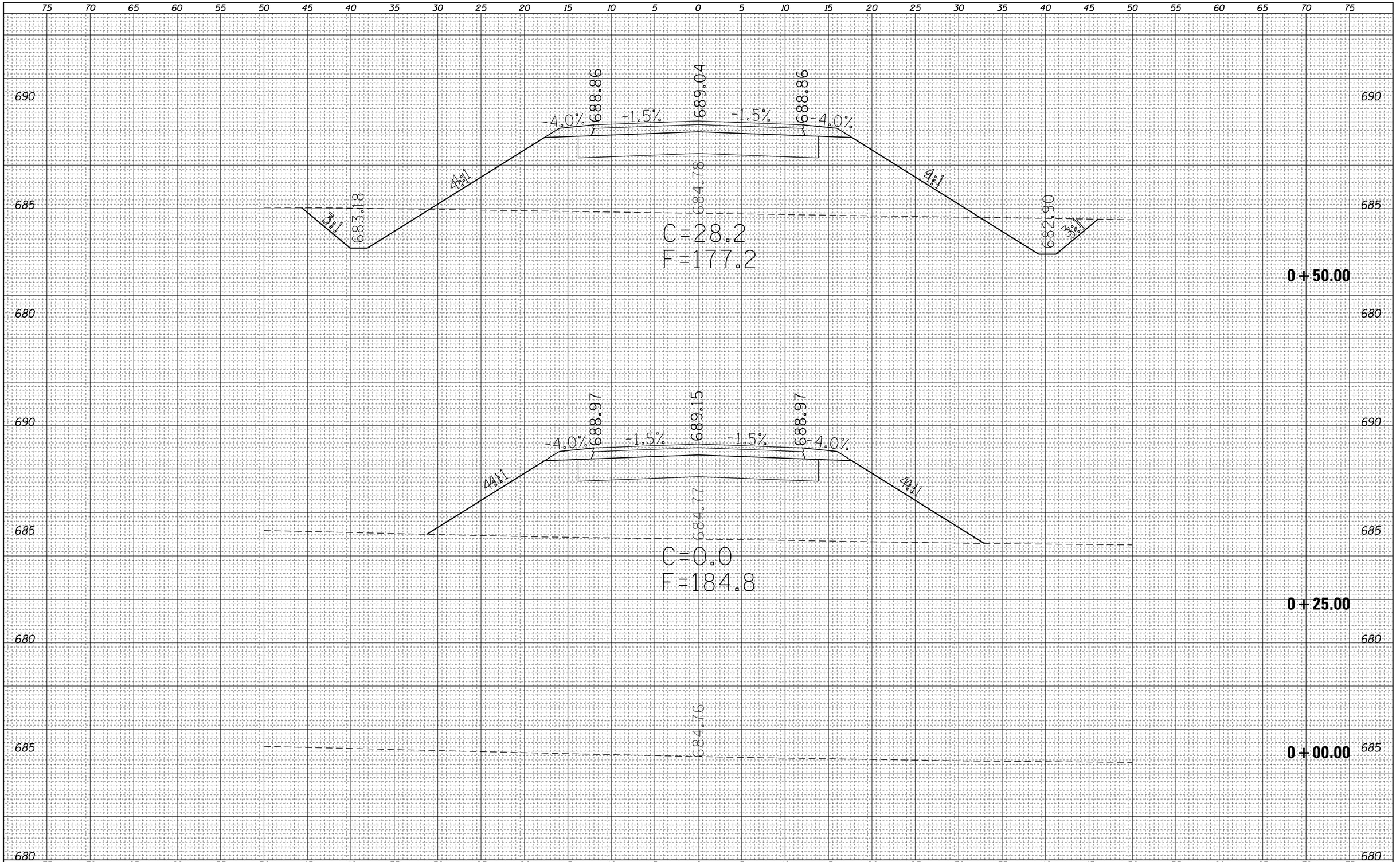

ORIGINAL SURVEY	NOTE BOOK	NO.
SURVEYED		
PLOTTED		
TEMPLATE		
AREAS		
AREAS CHECKED		

BY	DATE

FILE NAME =	USER NAME = steffenmk	DESIGNED -	REVISED -
c:\pw_work\pwidot\steffenmk\d0158776\D774423-sht-PRConnector.dgn		DRAWN -	REVISED -
	PLOT SCALE = 10.0000 ' / in.	CHECKED -	REVISED -
Default	PLOT DATE = 5/7/2014	DATE -	REVISED -

STATE OF ILLINOIS
DEPARTMENT OF TRANSPORTATION

CROSS SECTIONS
E. HARRISON AVE. CONNECTOR

SCALE: 5 | SHEET 1 OF 5 SHEETS | STA. 0+00.00 | TO STA. 0+50.00

F.A.P RTE.	SECTION	COUNTY	TOTAL SHEETS	SHEET NO.
91	5N	Coles	271	209

CONTRACT NO. 74423

ILLINOIS | FED. AID PROJECT

FINAL SURVEY	NOTE BOOK	NO.
	SURVEYED	
	PLOTTED	
	TEMPLATE	
	AREAS	
	AREAS CHECKED	

BY	DATE

ORIGINAL SURVEY	NOTE BOOK	NO.
	SURVEYED	
	PLOTTED	
	TEMPLATE	
	AREAS	
	AREAS CHECKED	

BY	DATE

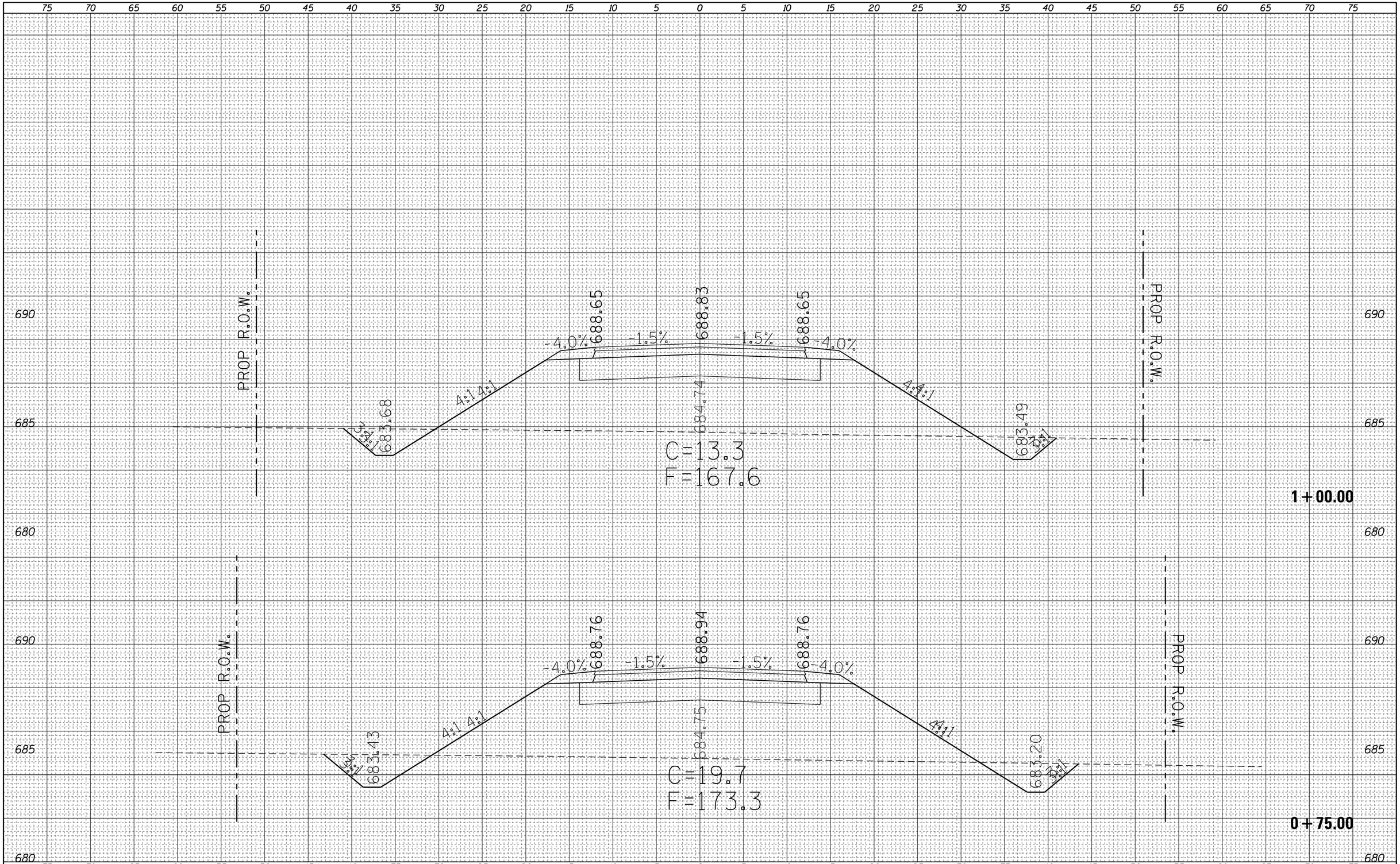

FILE NAME =	USER NAME = steffenmk	DESIGNED -	REVISED -
c:\pw_work\pwidot\steffenmk\d0158776\D774423-sht-PRConnector.dgn		DRAWN -	REVISED -
	PLOT SCALE = 10.0000 ' / in.	CHECKED -	REVISED -
Default	PLOT DATE = 5/7/2014	DATE -	REVISED -

STATE OF ILLINOIS
DEPARTMENT OF TRANSPORTATION

CROSS SECTIONS
E. HARRISON AVE. CONNECTOR

SCALE: 5 | SHEET 2 OF 5 SHEETS | STA. 0+75.00 | TO STA.1+00.00

F.A.P RTE.	SECTION	COUNTY	TOTAL SHEETS	SHEET NO.
91	5N	Coles	271	210

CONTRACT NO. 74423

ILLINOIS FED. AID PROJECT

FINAL SURVEY	NOTE BOOK	NO.
SURVEYED		
PLOTTED		
TEMPLATE		
AREAS		
AREAS CHECKED		

BY	DATE

ORIGINAL SURVEY	NOTE BOOK	NO.
SURVEYED		
PLOTTED		
TEMPLATE		
AREAS		
AREAS CHECKED		

BY	DATE

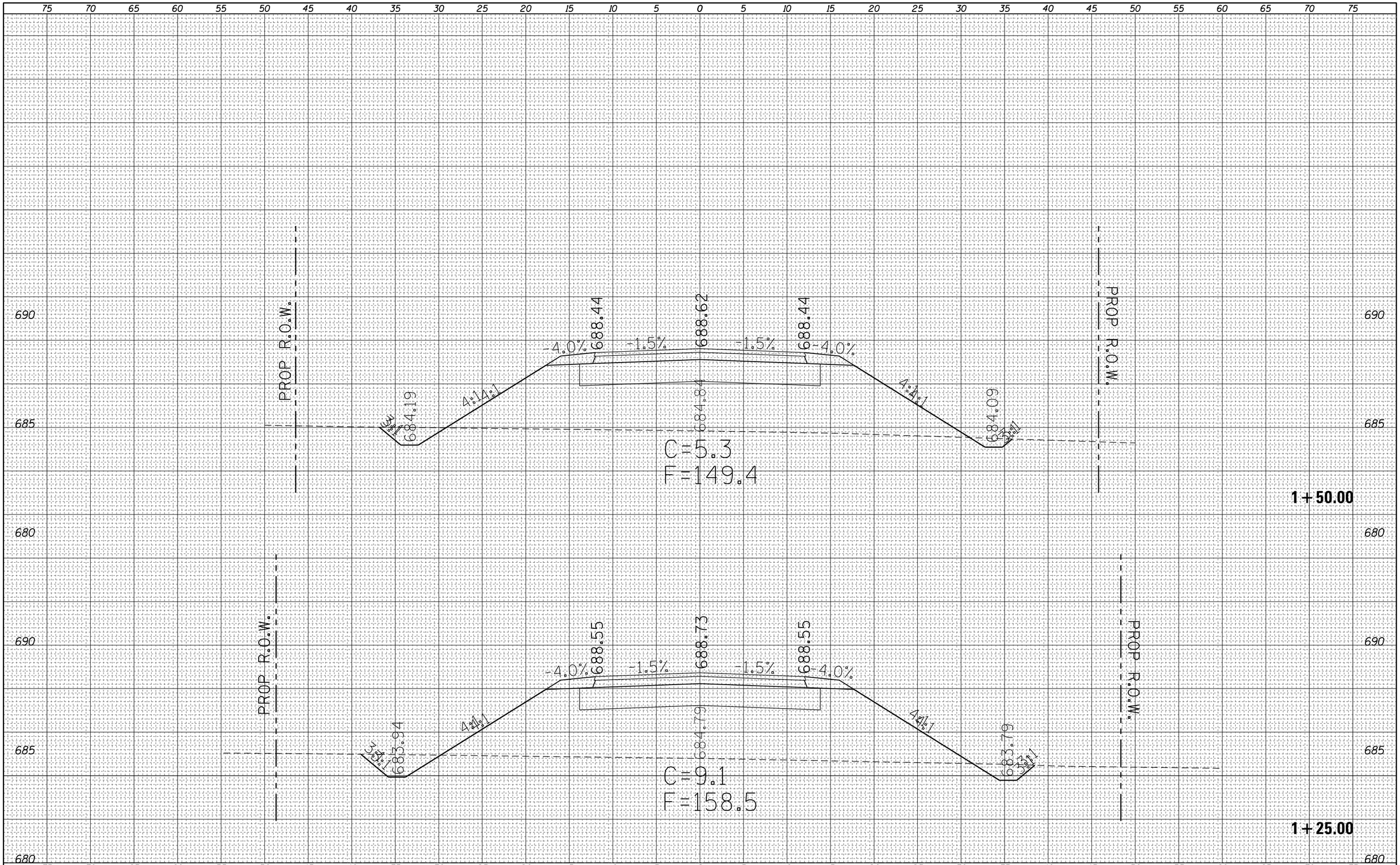

FILE NAME = c:\pw_work\pwidot\steffenmk\d0158776\D774423-xsc-sht-PRConnector.dgn	USER NAME = steffenmk	DESIGNED -	REVISED -
		DRAWN -	REVISED -
	PLOT SCALE = 10.0000 ' / in.	CHECKED -	REVISED -
Default	PLOT DATE = 5/7/2014	DATE -	REVISED -

STATE OF ILLINOIS
DEPARTMENT OF TRANSPORTATION

CROSS SECTIONS
E. HARRISON AVE. CONNECTOR

SCALE: 5 | SHEET 3 OF 5 SHEETS | STA. 1+25.00 | TO STA. 1+50.00

F.A.P RTE.	SECTION	COUNTY	TOTAL SHEETS	SHEET NO.
91	5N	Coles	271	211
		CONTRACT NO. 74423		
	ILLINOIS	FED. AID PROJECT		

FINAL SURVEY	NOTE BOOK	NO.
	SURVEYED	
	PLOTTED	
	TEMPLATE	
	AREAS	
	AREAS CHECKED	

BY	DATE

ORIGINAL SURVEY	NOTE BOOK	NO.
	SURVEYED	
	PLOTTED	
	TEMPLATE	
	AREAS	
	AREAS CHECKED	

BY	DATE

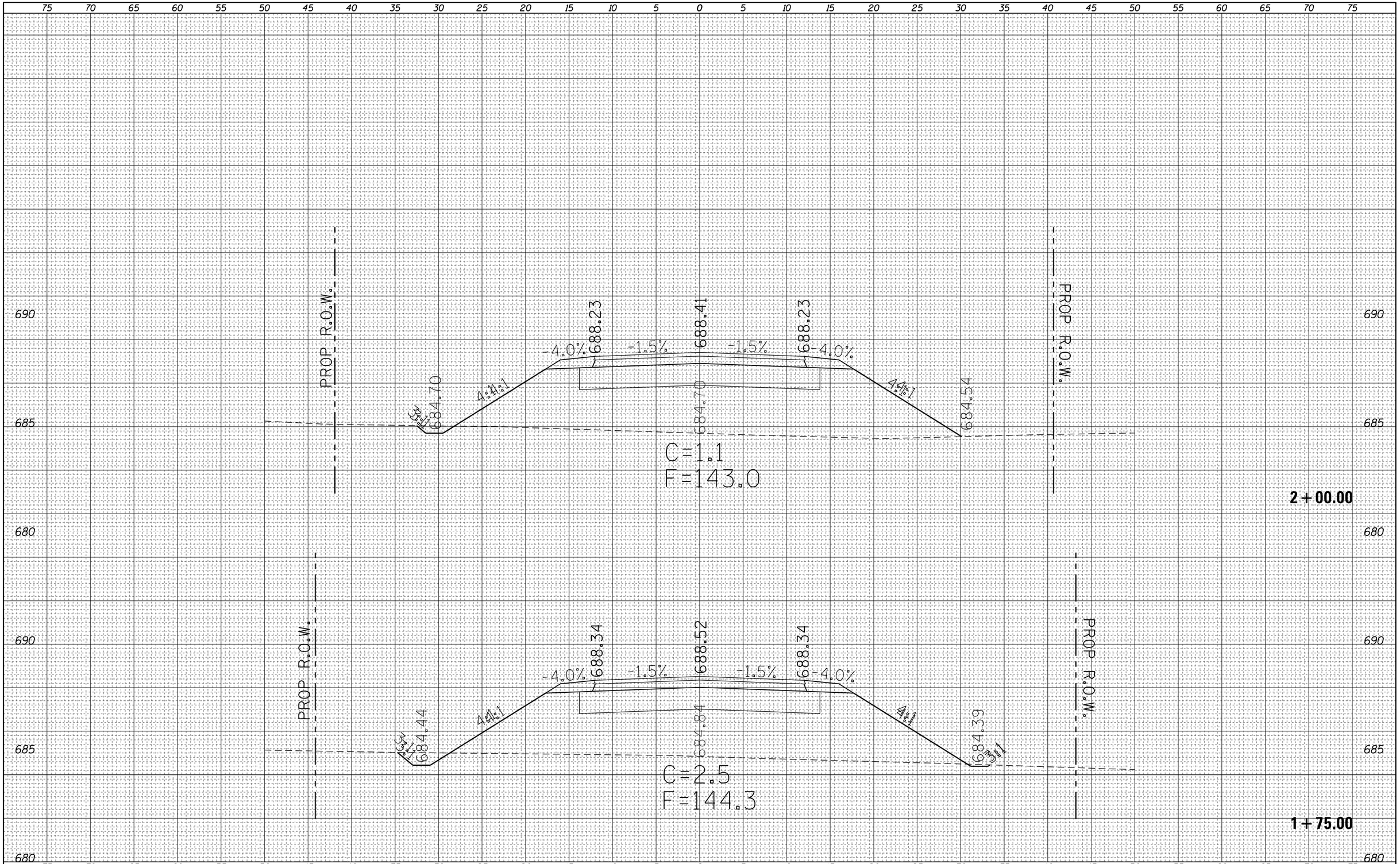

FILE NAME =	USER NAME = steffenmk	DESIGNED -	REVISED -
c:\pw_work\pwidot\steffenmk\d0158776\D774423-xsc-sht-PRConnector.dgn		DRAWN -	REVISED -
	PLOT SCALE = 10.0000 ' / in.	CHECKED -	REVISED -
Default	PLOT DATE = 5/7/2014	DATE -	REVISED -

STATE OF ILLINOIS
DEPARTMENT OF TRANSPORTATION

CROSS SECTIONS
E. HARRISON AVE. CONNECTOR

SCALE: 5 | SHEET 4 OF 5 SHEETS | STA. 1+75.00 | TO STA. 2+00.00

F.A.P RTE.	SECTION	COUNTY	TOTAL SHEETS	SHEET NO.
91	5N	Coles	271	212
		CONTRACT NO. 74423		
	ILLINOIS FED. AID PROJECT			

FINAL SURVEY		BY	DATE
NOTE BOOK	SURVEYED		
NO.	PLOTTED		
	TEMPLATE		
	ANGLES		
	AREAS CHECKED		

ORIGINAL SURVEY		BY	DATE
NOTE BOOK	SURVEYED		
NO.	PLOTTED		
	TEMPLATE		
	ANGLES		
	AREAS CHECKED		

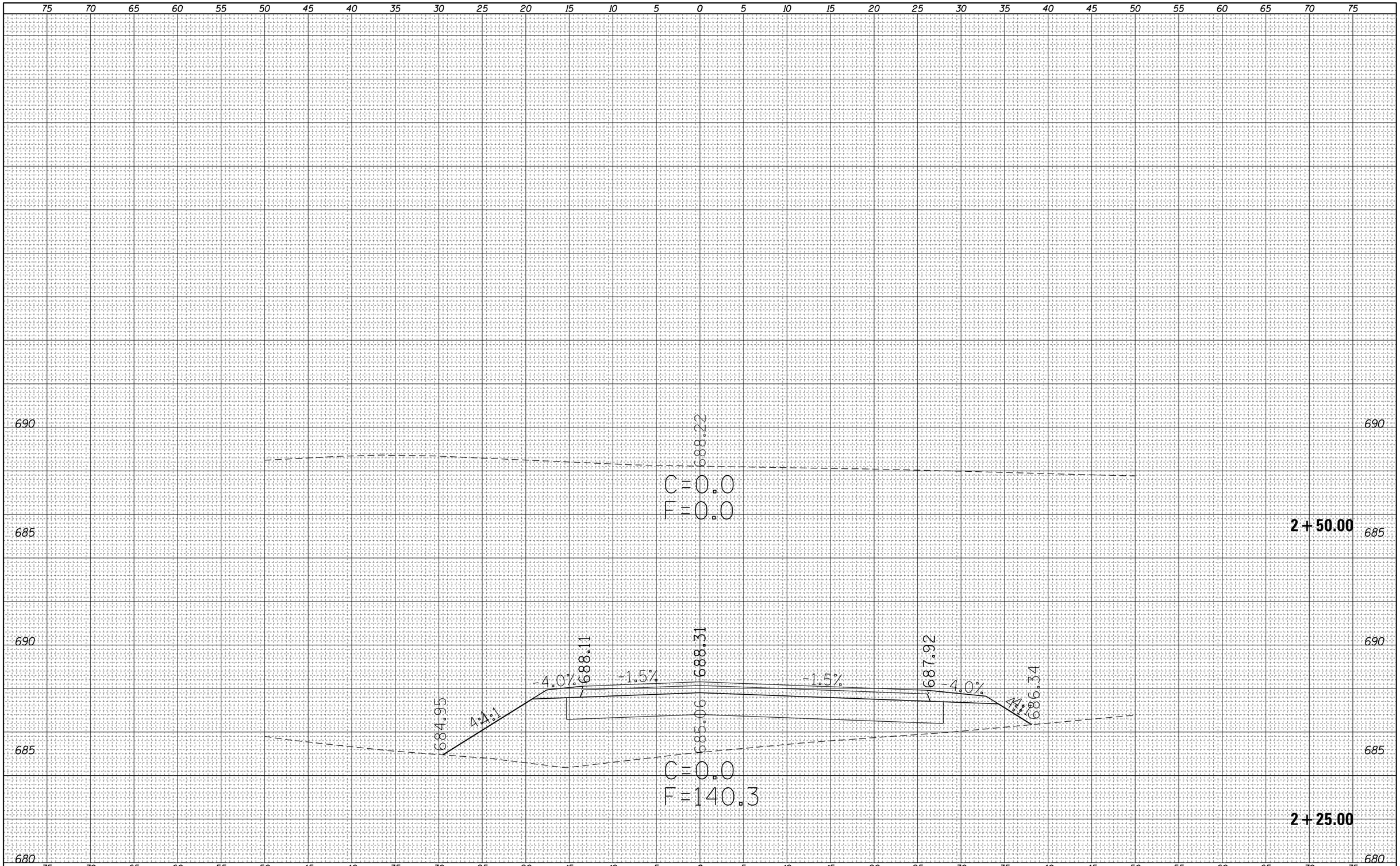

FILE NAME = c:\pw_work\pwidot\steffenmk\d0158776\D774423-sht-PRConnector.dgn	USER NAME = steffenmk	DESIGNED -	REVISED -
		DRAWN -	REVISED -
	PLOT SCALE = 10.0000 ' / in.	CHECKED -	REVISED -
Default	PLOT DATE = 5/7/2014	DATE -	REVISED -

STATE OF ILLINOIS
DEPARTMENT OF TRANSPORTATION

CROSS SECTIONS
E. HARRISON AVE. CONNECTOR

SCALE: 5 | SHEET 5 OF 5 SHEETS | STA. 2+25.00 | TO STA. 2+50.00

F.A.P RTE.	SECTION	COUNTY	TOTAL SHEETS	SHEET NO.
91	5N	Coles	271	213
		CONTRACT NO. 74423		
		ILLINOIS FED. AID PROJECT		

FINAL SURVEY	NOTE BOOK	NO.
SURVEYED		
PLOTTED		
TEMPLATE		
AREAS		
AREAS CHECKED		

BY	DATE

ORIGINAL SURVEY	NOTE BOOK	NO.
SURVEYED		
PLOTTED		
TEMPLATE		
AREAS		
AREAS CHECKED		

BY	DATE

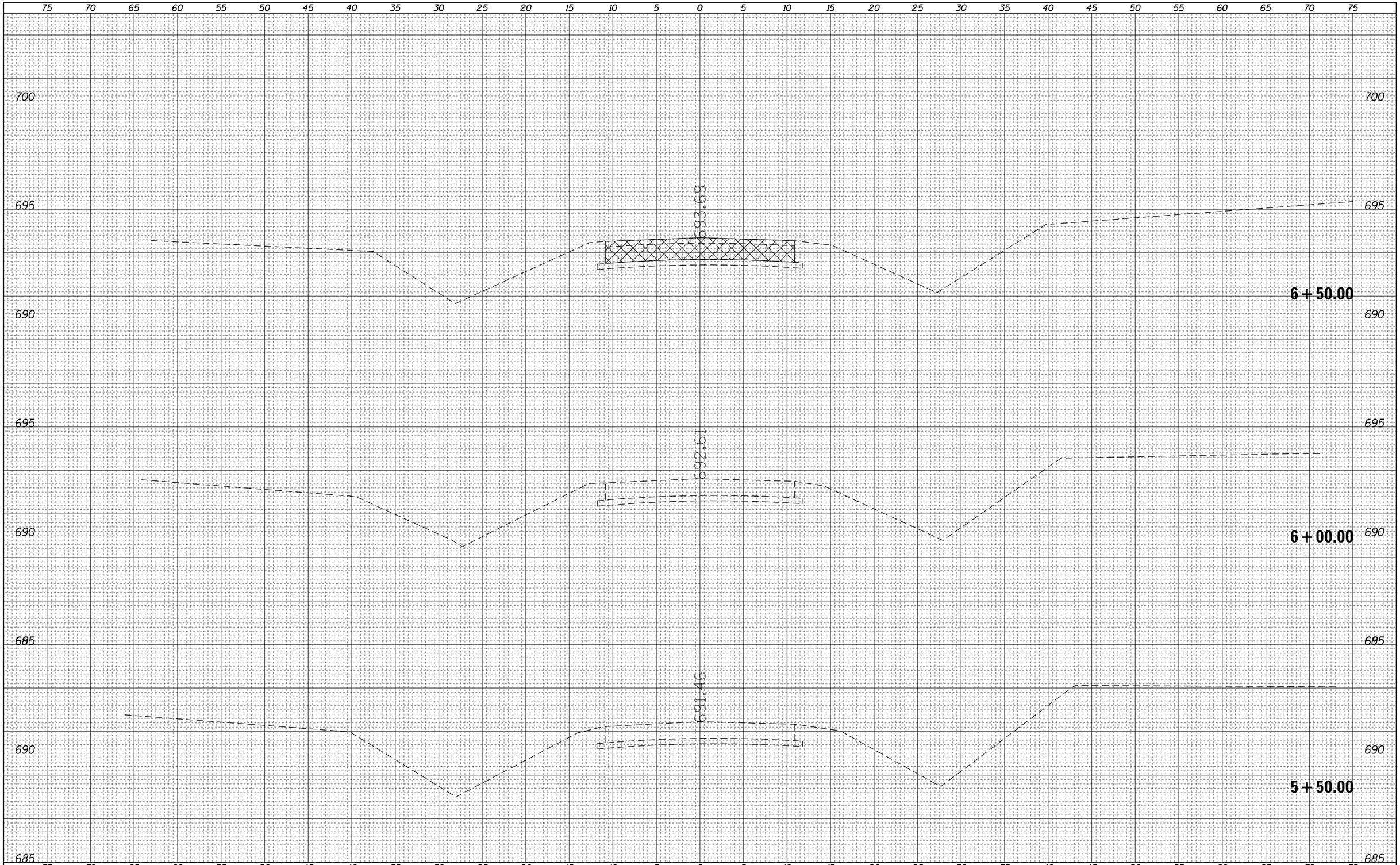

FILE NAME = c:\pw_work\pwidot\steffenmk\d0158776\D774423-sht-ExHarrison.dgn	USER NAME = steffenmk	DESIGNED -	REVISED -
		DRAWN -	REVISED -
	PLOT SCALE = 10.0000 ' / in.	CHECKED -	REVISED -
Default	PLOT DATE = 5/7/2014	DATE -	REVISED -

STATE OF ILLINOIS
DEPARTMENT OF TRANSPORTATION

CROSS SECTIONS
EX. E. HARRISON

SCALE: 5 | SHEET 1 OF 26 SHEETS | STA. | TO STA.

F.A.P. RTE.	SECTION	COUNTY	TOTAL SHEETS	SHEET NO.
91	5N	Coles	271	214

CONTRACT NO. 74423

ILLINOIS | FED. AID PROJECT

FINAL SURVEY	NOTE BOOK	NO.
	SURVEYED	
	PLOTTED	
	TEMPLATE	
	AREAS	
	AREAS CHECKED	

BY	DATE

ORIGINAL SURVEY	NOTE BOOK	NO.
	SURVEYED	
	PLOTTED	
	TEMPLATE	
	AREAS	
	AREAS CHECKED	

BY	DATE

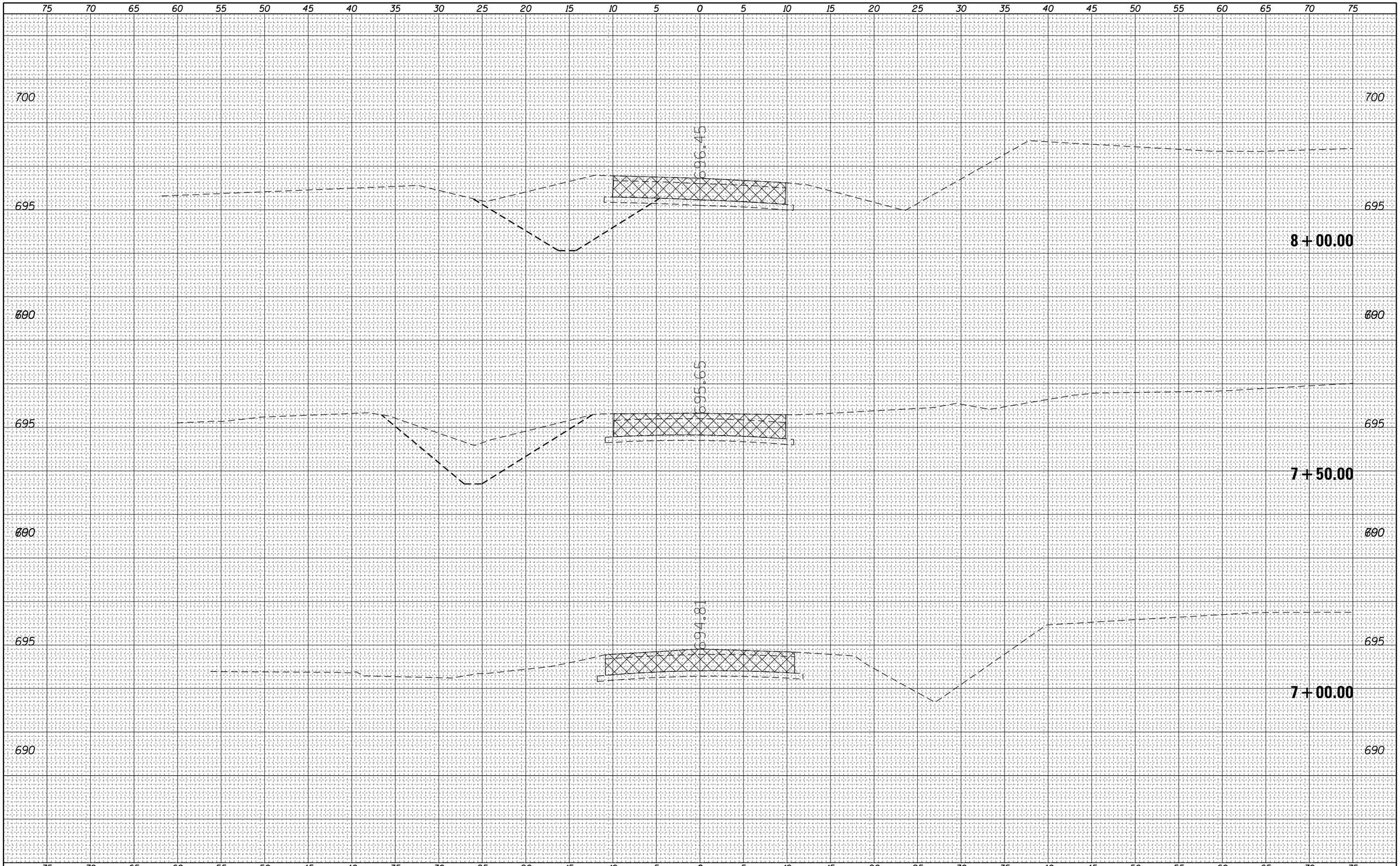

FILE NAME = c:\pw_work\pwidot\steffenmk\d0158776\D774423-xsc-sht-ExHarrison.dgn	USER NAME = steffenmk	DESIGNED -	REVISED -
		DRAWN -	REVISED -
	PLOT SCALE = 10.0000 ' / in.	CHECKED -	REVISED -
Default	PLOT DATE = 5/7/2014	DATE -	REVISED -

STATE OF ILLINOIS
DEPARTMENT OF TRANSPORTATION

CROSS SECTIONS
EX. E. HARRISON

SCALE: 5 | SHEET 2 OF 26 SHEETS | STA. | TO STA.

F.A.P. RTE.	SECTION	COUNTY	TOTAL SHEETS	SHEET NO.
91	5N	Coles	271	215
		CONTRACT NO. 74423		
	ILLINOIS	FED. AID PROJECT		

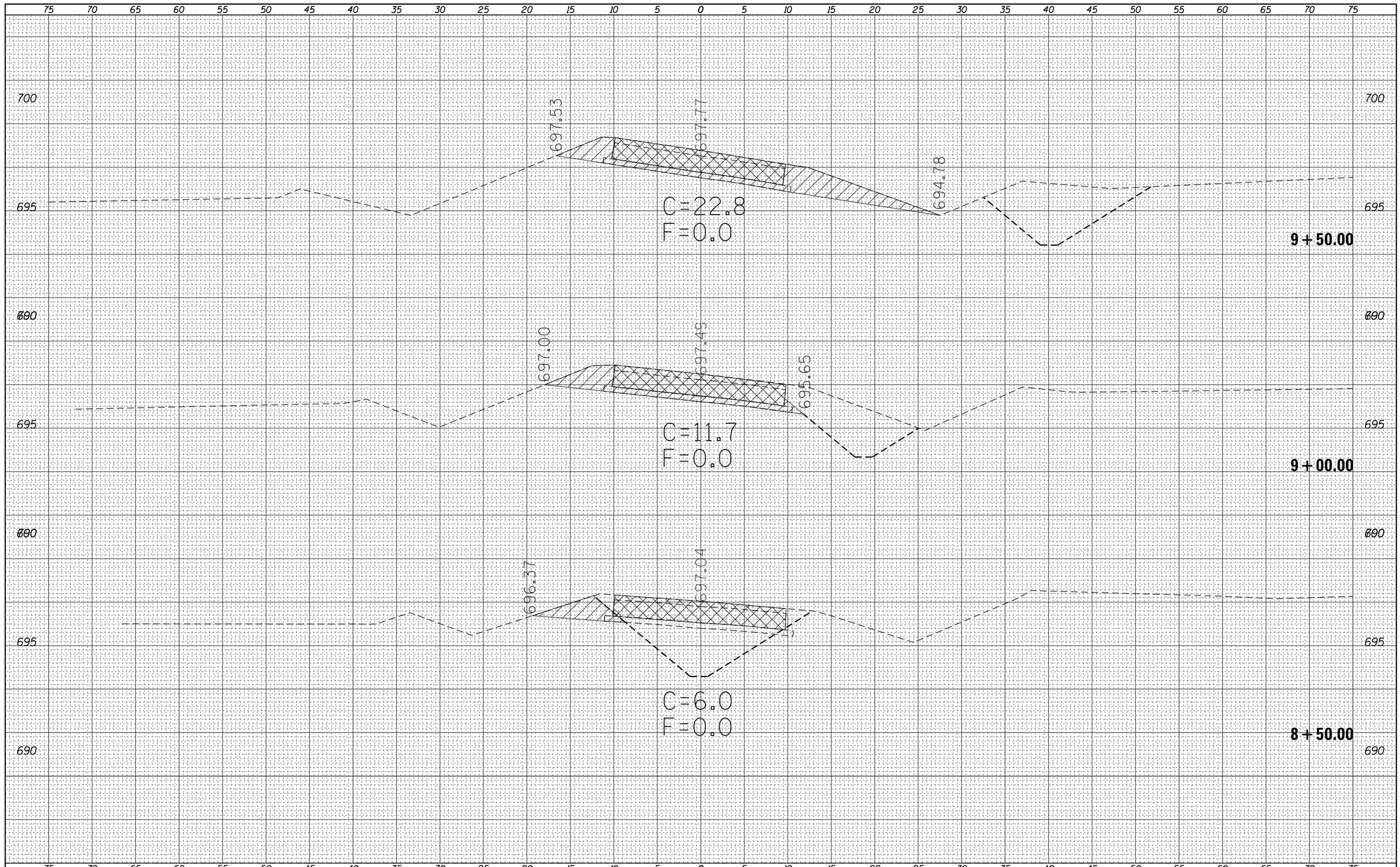

FINAL SURVEY	NOTE BOOK	NO.
SURVEYED	BY	
PLOTTED		
TEMPLATE		
AREAS		
AREAS CHECKED		DATE

ORIGINAL SURVEY	NOTE BOOK	NO.
SURVEYED	BY	
PLOTTED		
TEMPLATE		
AREAS		
AREAS CHECKED		DATE

FILE NAME =	USER NAME = steffenmk	DESIGNED -	REVISED -
c:\pw_work\pwidot\steffenmk\d0158776\D774423-sht-ExHarrison.dgn		DRAWN -	REVISED -
	PLOT SCALE = 10.0000 ' / in.	CHECKED -	REVISED -
Default	PLOT DATE = 5/7/2014	DATE -	REVISED -

STATE OF ILLINOIS
DEPARTMENT OF TRANSPORTATION

CROSS SECTIONS
EX. E. HARRISON

SCALE: 5 | SHEET 3 OF 26 SHEETS | STA. | TO STA.

F.A.P. RTE.	SECTION	COUNTY	TOTAL SHEETS	SHEET NO.
91	5N	Coles	271	216
		CONTRACT NO. 74423		
		ILLINOIS FED. AID PROJECT		

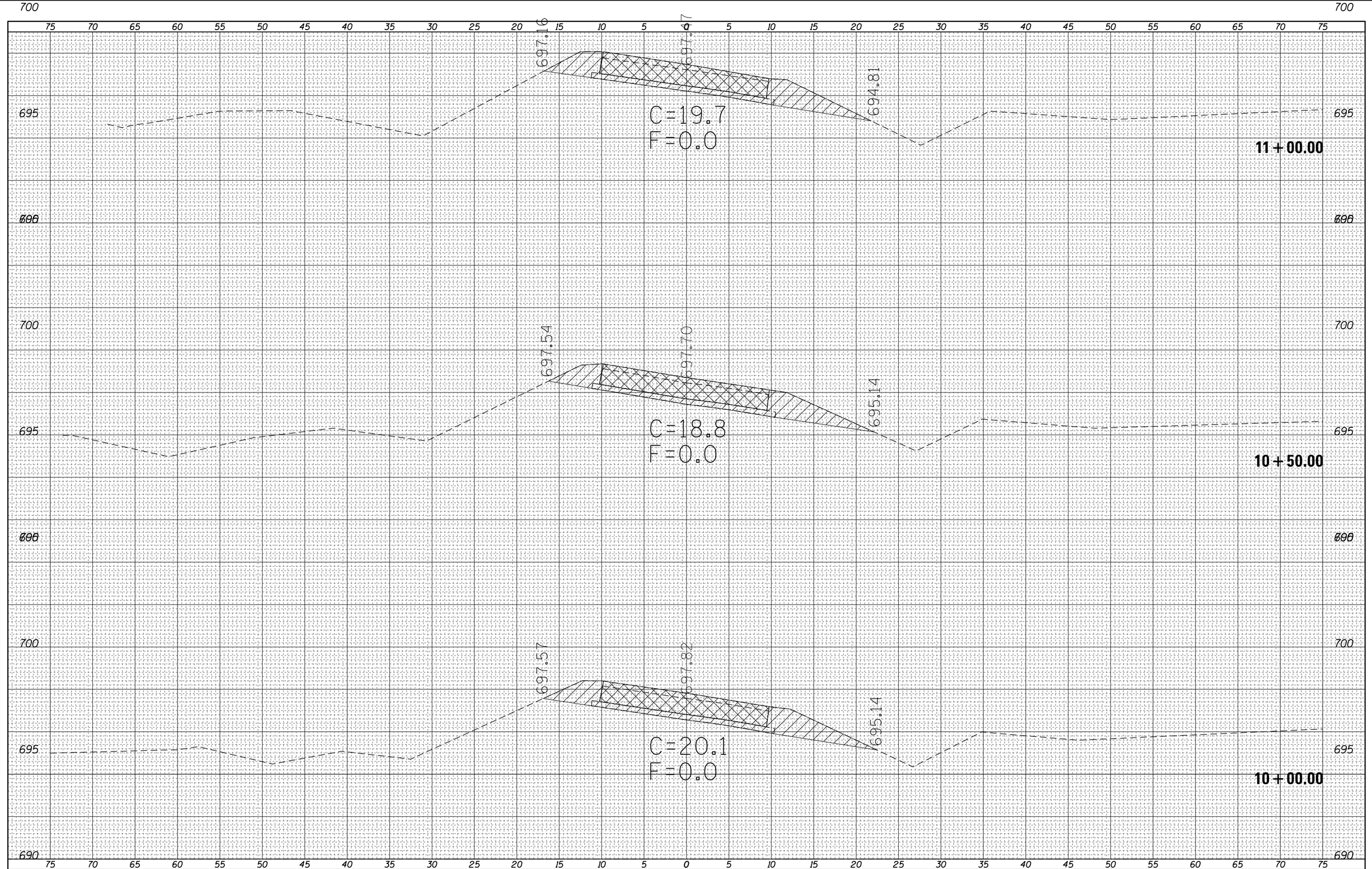

FINAL SURVEY	NOTE BOOK	NO.
SURVEYED		
PLOTTED		
TEMPLATE		
AREAS		
AREAS CHECKED		

ORIGINAL SURVEY	NOTE BOOK	NO.
SURVEYED		
PLOTTED		
TEMPLATE		
AREAS		
AREAS CHECKED		

BY	DATE

FILE NAME =	USER NAME = steffenmk	DESIGNED -	REVISED -
c:\pw_work\pwidot\steffenmk\d0158776\D774423-sht-ExHarrison.dgn		DRAWN -	REVISED -
	PLOT SCALE = 10.0000 ' / in.	CHECKED -	REVISED -
Default	PLOT DATE = 5/7/2014	DATE -	REVISED -

STATE OF ILLINOIS
DEPARTMENT OF TRANSPORTATION

CROSS SECTIONS
EX. E. HARRISON

SCALE: 5 | SHEET 4 OF 26 SHEETS | STA. | TO STA.

F.A.P. RTE.	SECTION	COUNTY	TOTAL SHEETS	SHEET NO.
91	5N	Coles	271	217

CONTRACT NO. 74423

ILLINOIS | FED. AID PROJECT

FINAL SURVEY	SURVEYED	BY	DATE
NOTE BOOK	PLOTTED		
NO.	TEMPLATE		
	AREAS		
	AREAS CHECKED		

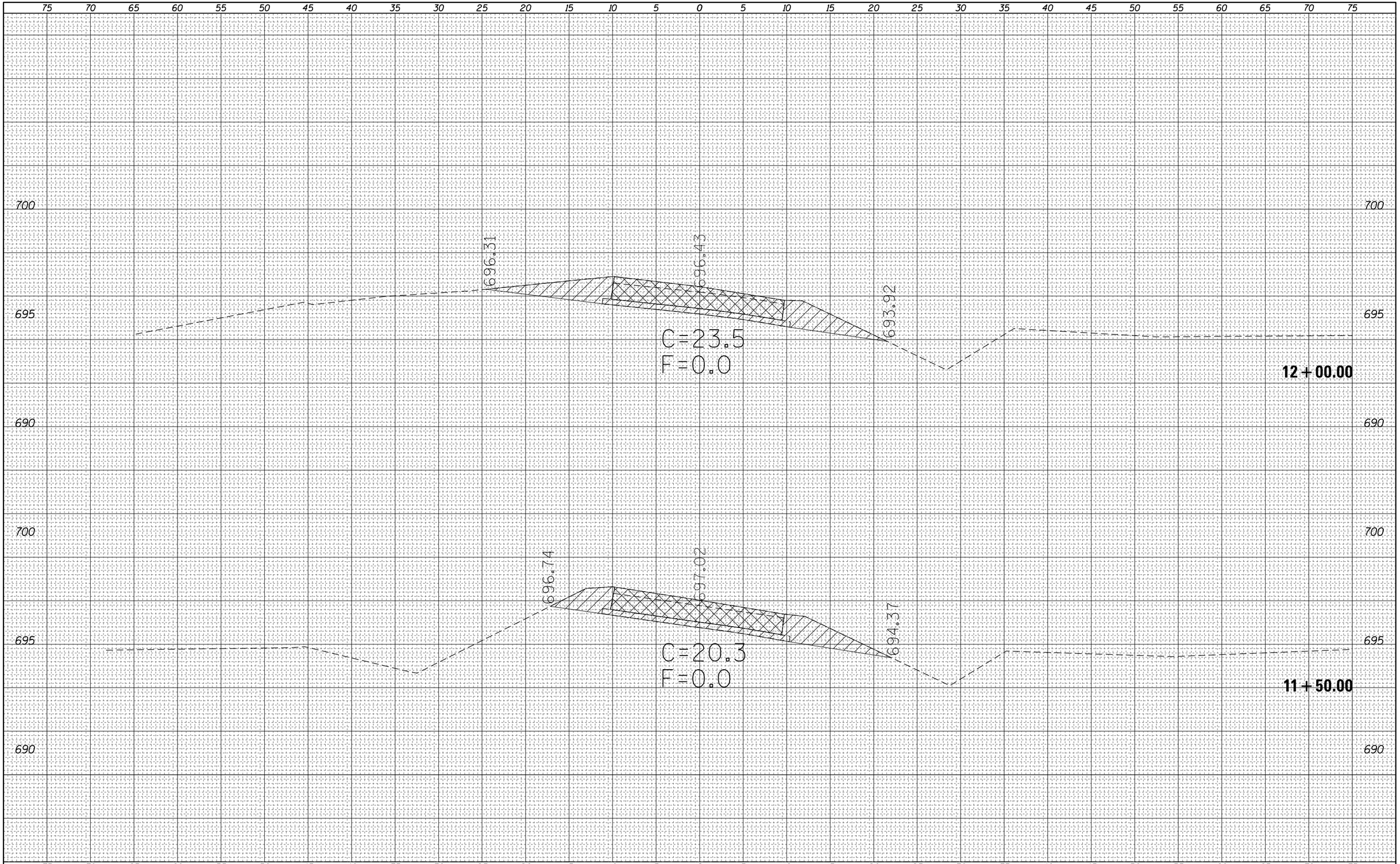

ORIGINAL SURVEY	SURVEYED	BY	DATE
NOTE BOOK	PLOTTED		
NO.	TEMPLATE		
	AREAS		
	AREAS CHECKED		

FILE NAME =	USER NAME = steffenmk	DESIGNED -	REVISED -
c:\pw_work\pwidot\steffenmk\d0158776\D774423-sht-ExHarrison.dgn		DRAWN -	REVISED -
	PLOT SCALE = 10.0000 ' / in.	CHECKED -	REVISED -
Default	PLOT DATE = 5/7/2014	DATE -	REVISED -

STATE OF ILLINOIS
DEPARTMENT OF TRANSPORTATION

CROSS SECTIONS
EX. E. HARRISON

SCALE: 5 | SHEET 5 OF 26 SHEETS | STA. | TO STA.

F.A.P. RTE.	SECTION	COUNTY	TOTAL SHEETS	SHEET NO.
91	5N	Coles	271	218

CONTRACT NO. 74423

ILLINOIS | FED. AID PROJECT

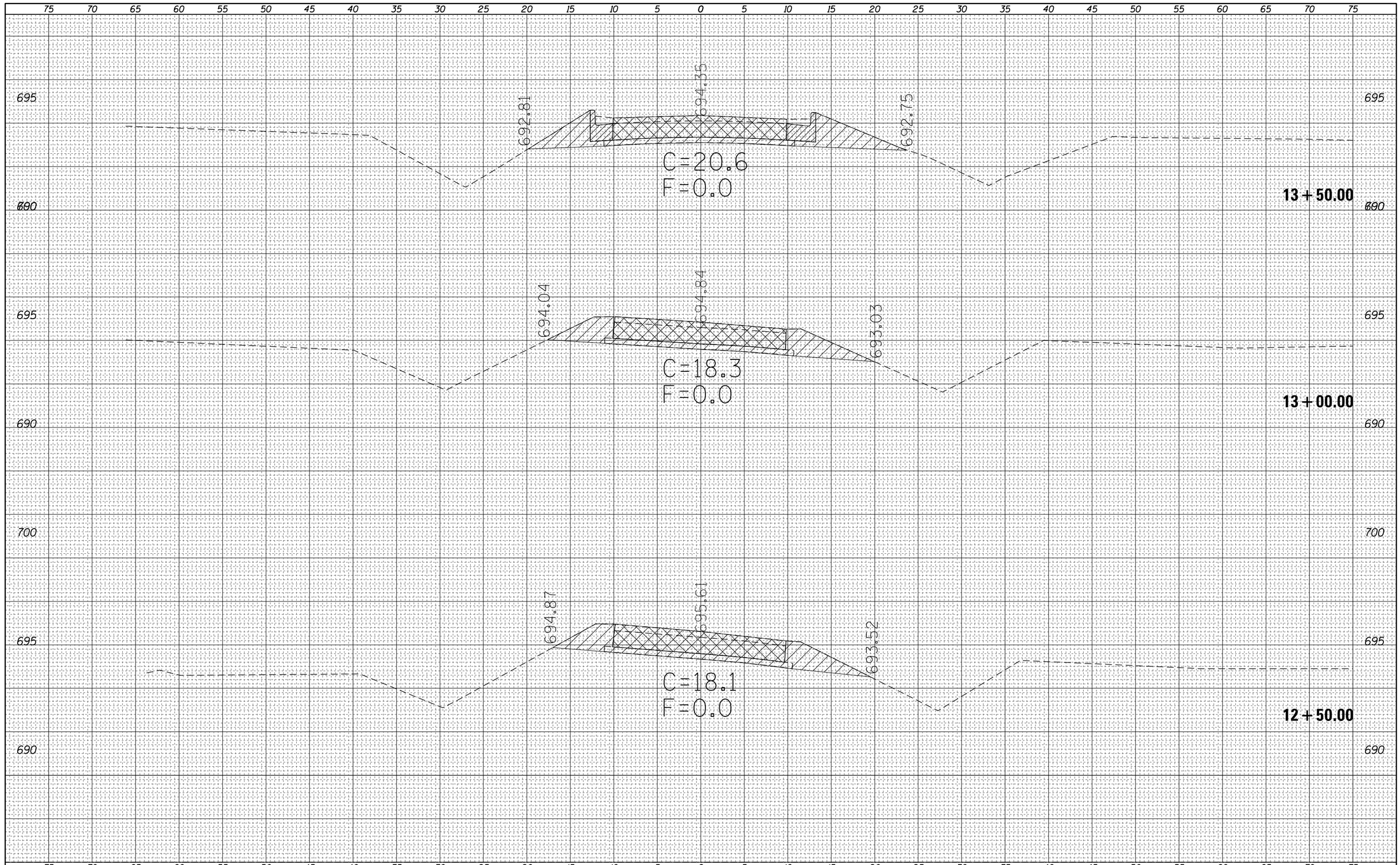

FINAL SURVEY	NOTE BOOK	NO.
SURVEYED		
PLOTTED		
TEMPLATE		
AREAS		
AREAS CHECKED		

ORIGINAL SURVEY	NOTE BOOK	NO.
SURVEYED		
PLOTTED		
TEMPLATE		
AREAS		
AREAS CHECKED		

BY	DATE

FILE NAME =	USER NAME = steffenmk	DESIGNED -	REVISED -
c:\pw_work\pwidot\steffenmk\d0158776\D774423-xsc-sht-ExHarrison.dgn		DRAWN -	REVISED -
Default	PLOT SCALE = 10.0000 ' / in.	CHECKED -	REVISED -
	PLOT DATE = 5/7/2014	DATE -	REVISED -

STATE OF ILLINOIS
DEPARTMENT OF TRANSPORTATION

CROSS SECTIONS
EX. E. HARRISON

SCALE: 5 | SHEET 6 OF 26 SHEETS | STA. | TO STA.

F.A.P. RTE.	SECTION	COUNTY	TOTAL SHEETS	SHEET NO.
91	5N	Coles	271	219

CONTRACT NO. 74423

ILLINOIS FED. AID PROJECT

FINAL SURVEY	NOTE BOOK	NO.
	SURVEYED	
	PLOTTED	
	TEMPLATE	
	AREAS	
	AREAS CHECKED	

BY	DATE

ORIGINAL SURVEY	NOTE BOOK	NO.
	SURVEYED	
	PLOTTED	
	TEMPLATE	
	AREAS	
	AREAS CHECKED	

BY	DATE

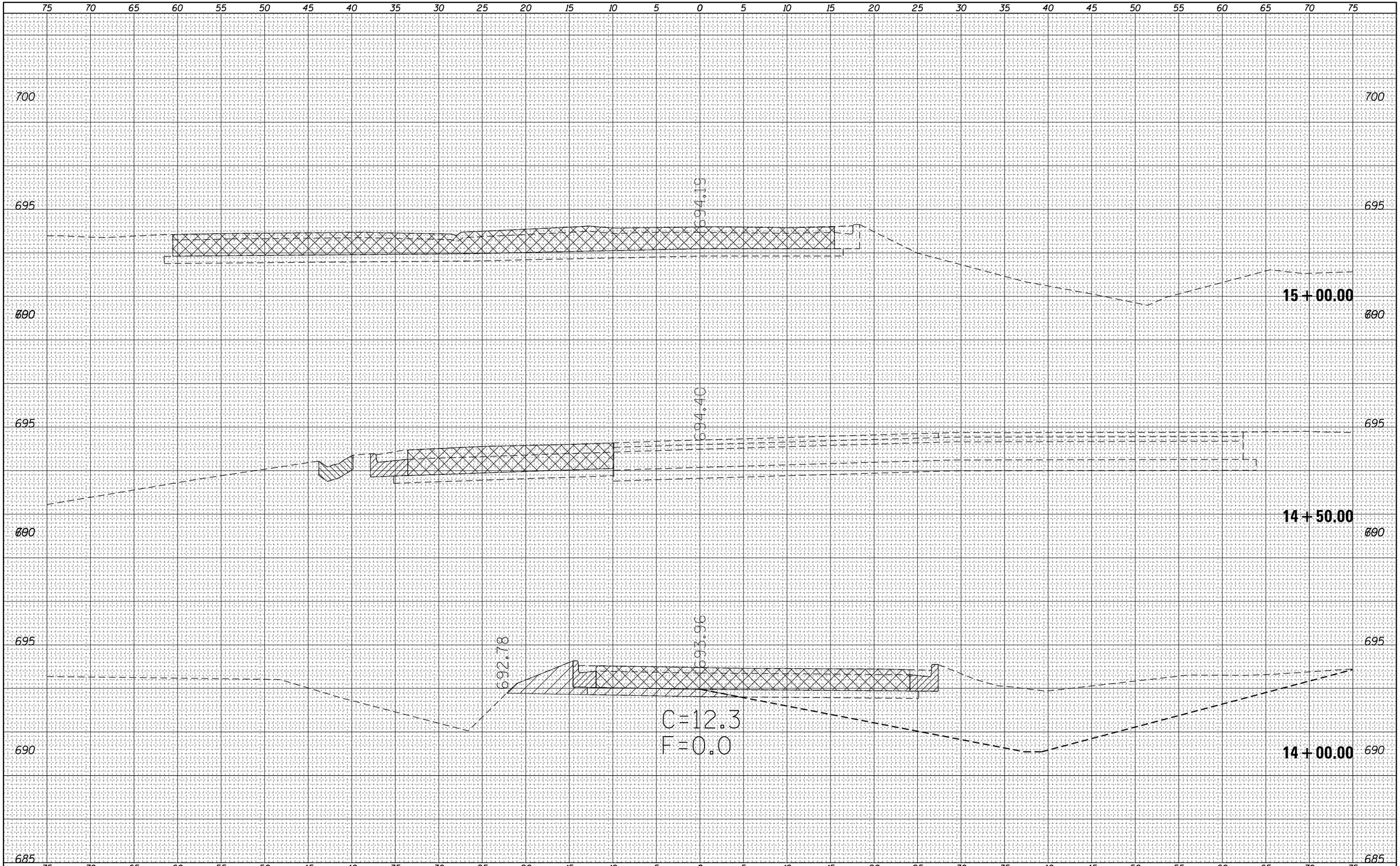

FILE NAME = c:\pw_work\pwidot\steffenmk\d0158776\D774423-xsc-sht-ExHarrison.dgn	USER NAME = steffenmk	DESIGNED -	REVISED -
		DRAWN -	REVISED -
	PLOT SCALE = 10.0000 ' / in.	CHECKED -	REVISED -
Default	PLOT DATE = 5/7/2014	DATE -	REVISED -

STATE OF ILLINOIS
DEPARTMENT OF TRANSPORTATION

CROSS SECTIONS
EX. E. HARRISON

SCALE: 5 | SHEET 7 OF 26 SHEETS | STA. | TO STA.

F.A.P. RTE.	SECTION	COUNTY	TOTAL SHEETS	SHEET NO.
91	5N	Coles	271	220

CONTRACT NO. 74423

ILLINOIS | FED. AID PROJECT

FINAL SURVEY	NOTE BOOK	NO.
	SURVEYED	
	PLOTTED	
	TEMPLATE	
	AREAS	
	AREAS CHECKED	

BY	DATE

ORIGINAL SURVEY	NOTE BOOK	NO.
	SURVEYED	
	PLOTTED	
	TEMPLATE	
	AREAS	
	AREAS CHECKED	

BY	DATE

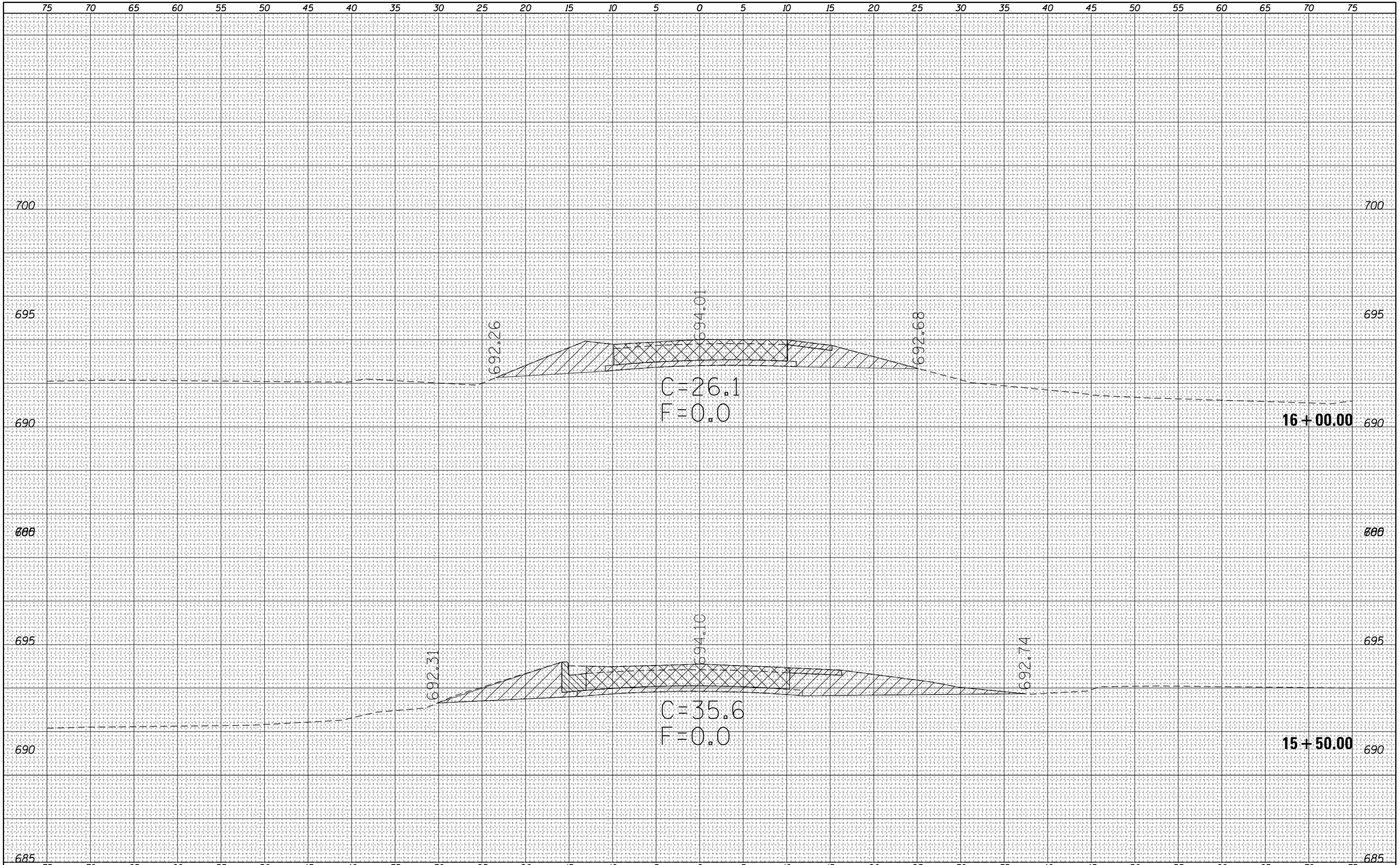

FILE NAME =	USER NAME = steffenmk	DESIGNED -	REVISED -
c:\pw_work\pwidot\steffenmk\d0158776\D774423-xsc-sht-ExHarrison.dgn		DRAWN -	REVISED -
	PLOT SCALE = 10.0000 ' / in.	CHECKED -	REVISED -
Default	PLOT DATE = 5/7/2014	DATE -	REVISED -

STATE OF ILLINOIS
DEPARTMENT OF TRANSPORTATION

CROSS SECTIONS
EX. E. HARRISON

SCALE: 5 | SHEET 8 OF 26 SHEETS | STA. | TO STA.

F.A.P. RTE.	SECTION	COUNTY	TOTAL SHEETS	SHEET NO.
91	5N	Coles	271	221

CONTRACT NO. 74423

ILLINOIS FED. AID PROJECT

FINAL SURVEY	NOTE BOOK	NO.
SURVEYED		BY
PLOTTED		
TEMPLATE		
AREAS		
AREAS CHECKED		DATE

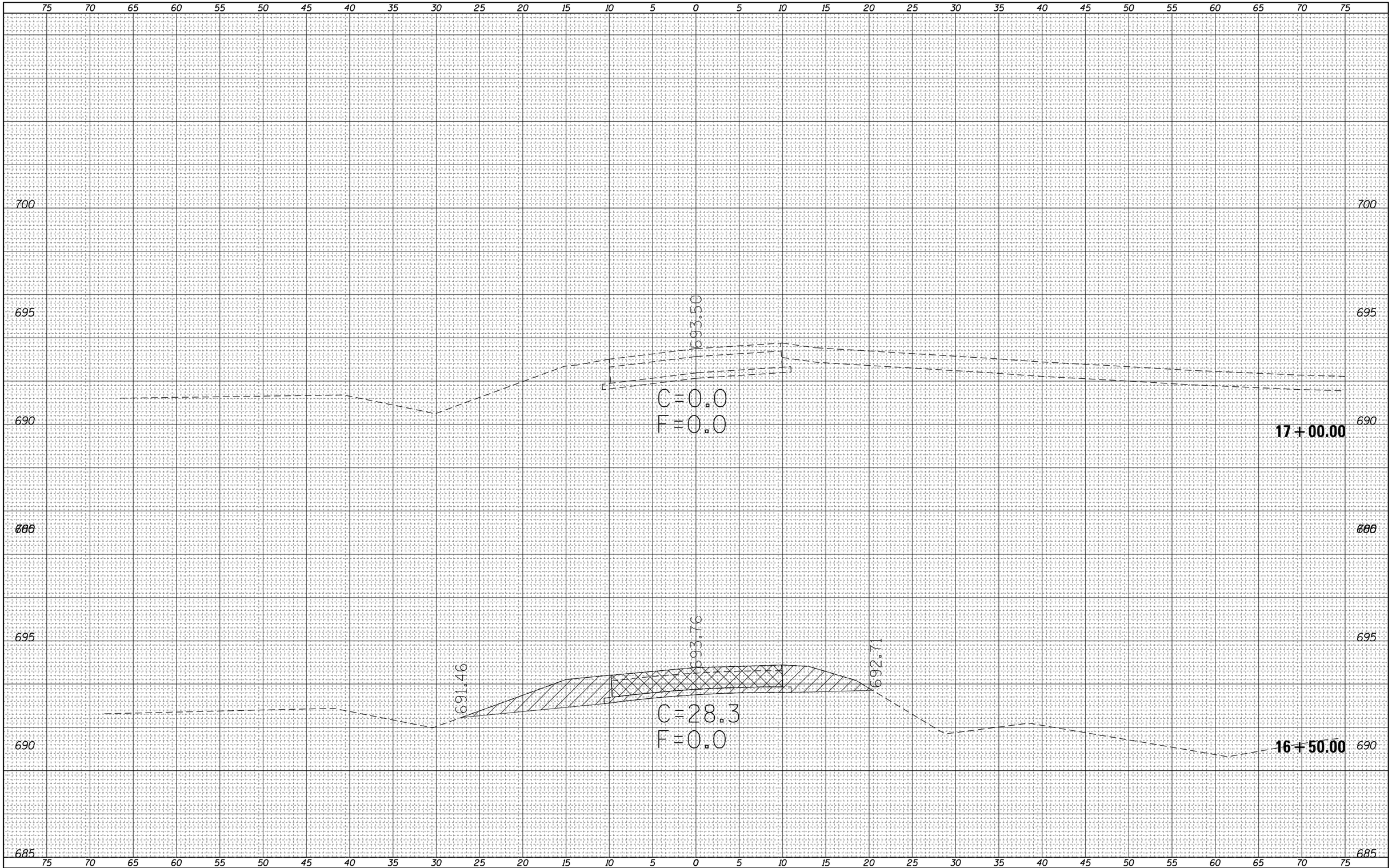

FILE NAME = c:\pw_work\pwidot\steffenmk\d0158776\D774423-sht-ExHarrison.dgn	USER NAME = steffenmk	DESIGNED -	REVISED -
		DRAWN -	REVISED -
	PLOT SCALE = 10.0000 ' / in.	CHECKED -	REVISED -
Default	PLOT DATE = 5/7/2014	DATE -	REVISED -

STATE OF ILLINOIS
DEPARTMENT OF TRANSPORTATION

CROSS SECTIONS
EX. E. HARRISON

SCALE: 5 | SHEET 9 OF 26 SHEETS | STA. | TO STA.

F.A.P. RTE.	SECTION	COUNTY	TOTAL SHEETS	SHEET NO.
91	5N	Coles	271	222

CONTRACT NO. 74423

ILLINOIS FED. AID PROJECT

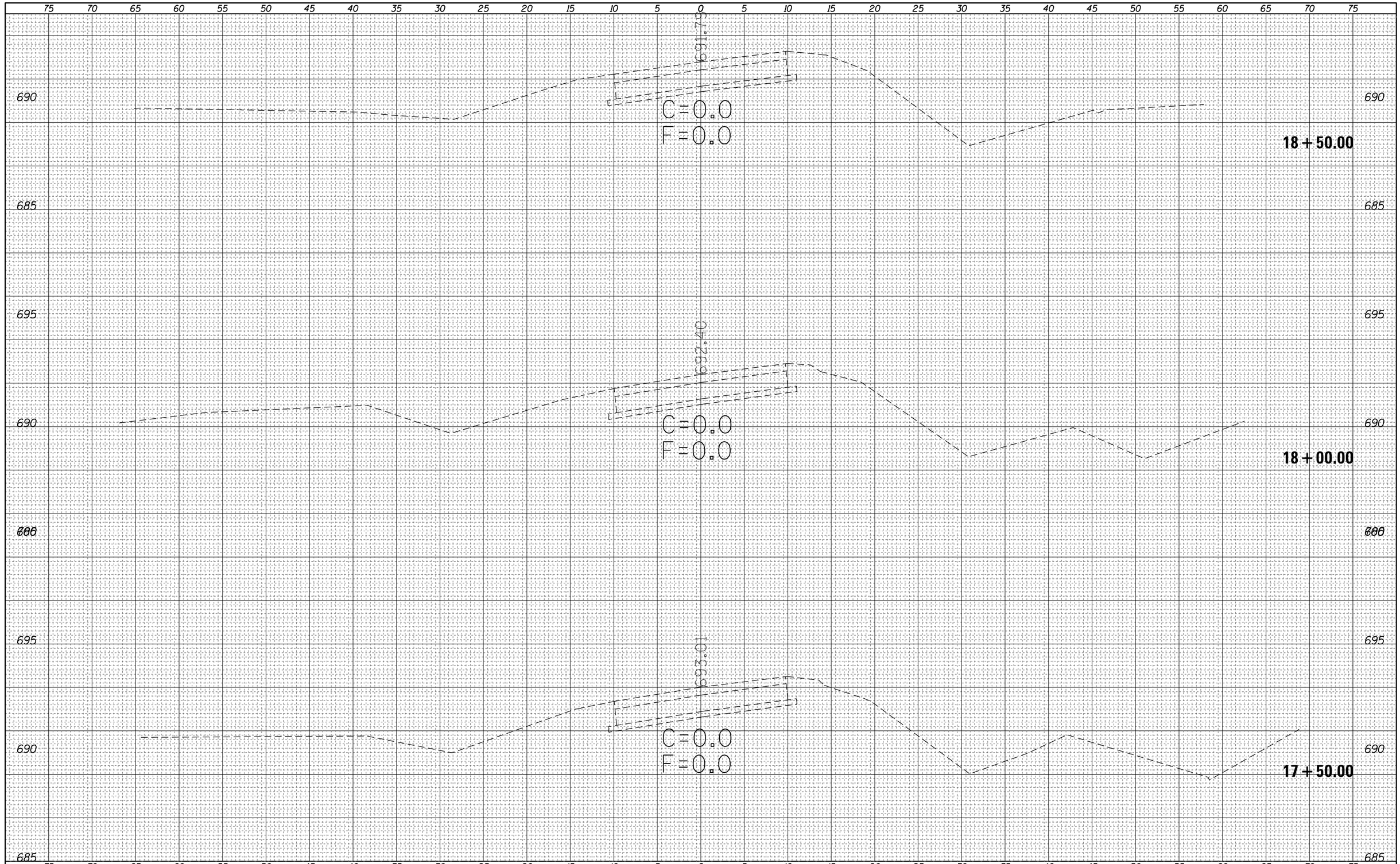

FINAL SURVEY	NOTE BOOK	NO.
SURVEYED		
PLOTTED		
TEMPLATE		
AREAS		
AREAS CHECKED		

BY	DATE

ORIGINAL SURVEY	NOTE BOOK	NO.
SURVEYED		
PLOTTED		
TEMPLATE		
AREAS		
AREAS CHECKED		

BY	DATE

FILE NAME =	USER NAME = steffenmk	DESIGNED -	REVISED -
c:\pw_work\pwidot\steffenmk\d0158776\D774423-sht-ExHarrison.dgn		DRAWN -	REVISED -
	PLOT SCALE = 10.0000 ' / in.	CHECKED -	REVISED -
Default	PLOT DATE = 5/7/2014	DATE -	REVISED -

STATE OF ILLINOIS
DEPARTMENT OF TRANSPORTATION

CROSS SECTIONS
EX. E. HARRISON

SCALE: 5 | SHEET 10 OF 26 SHEETS | STA. | TO STA.

F.A.P. RTE.	SECTION	COUNTY	TOTAL SHEETS	SHEET NO.
91	5N	Coles	271	223

CONTRACT NO. 74423

ILLINOIS | FED. AID PROJECT

FINAL SURVEY	
NOTE BOOK	
NO.	

SURVEYED
PLOTTED
TEMPLATE
AREAS
AREAS CHECKED

BY	DATE

ORIGINAL SURVEY	
NOTE BOOK	
NO.	

SURVEYED
PLOTTED
TEMPLATE
AREAS
AREAS CHECKED

BY	DATE

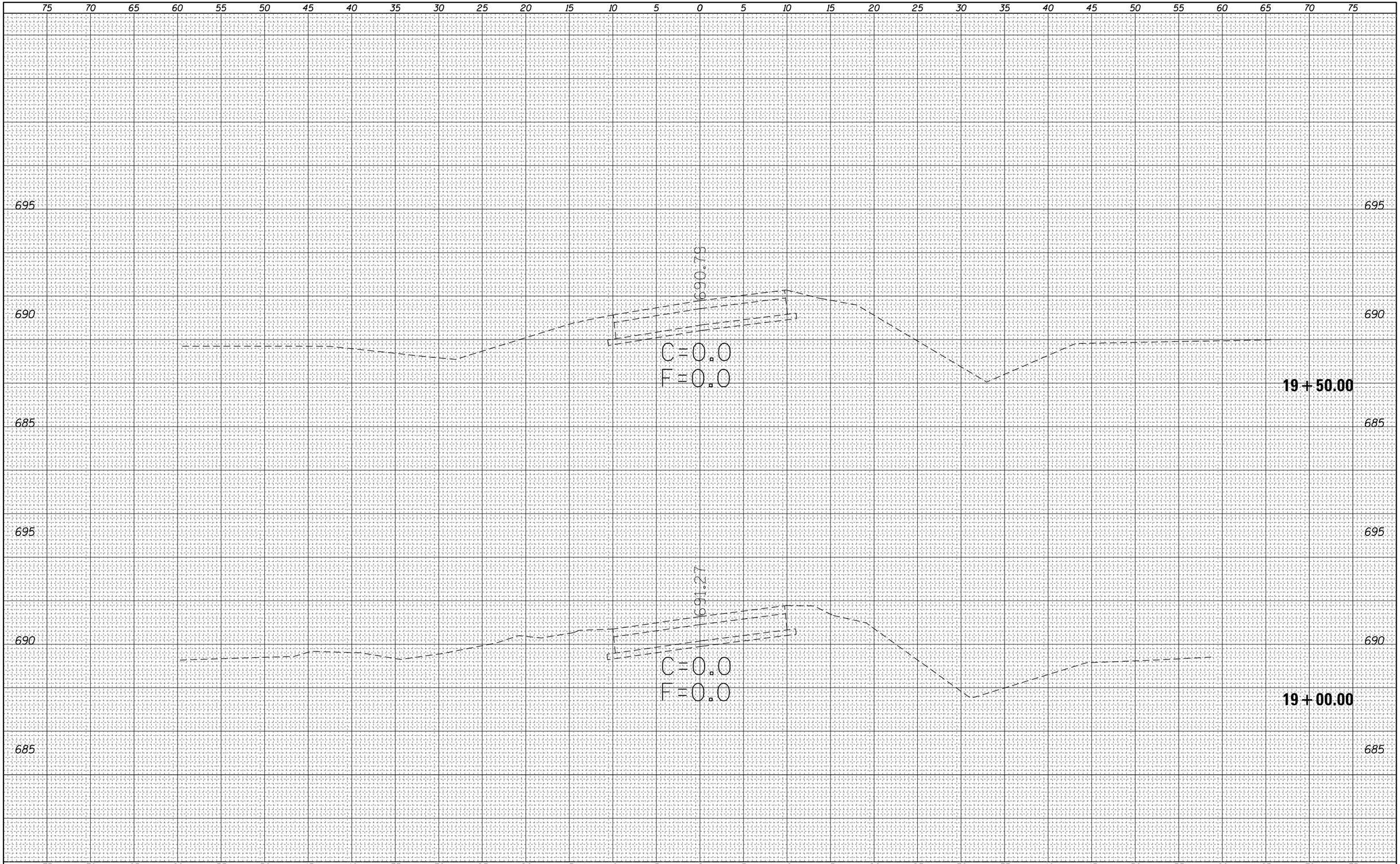

FILE NAME =	USER NAME = steffenmk	DESIGNED -	REVISED -
c:\pw_work\pwidot\steffenmk\d0158776\D774423-sht-ExHarrison.dgn		DRAWN -	REVISED -
	PLOT SCALE = 10.0000 ' / in.	CHECKED -	REVISED -
Default	PLOT DATE = 5/7/2014	DATE -	REVISED -

STATE OF ILLINOIS
DEPARTMENT OF TRANSPORTATION

CROSS SECTIONS
EX. E. HARRISON

SCALE: 5 | SHEET 11 OF 26 SHEETS | STA. | TO STA.

F.A.P. RTE.	SECTION	COUNTY	TOTAL SHEETS	SHEET NO.
91	5N	Coles	271	224

CONTRACT NO. 74423

ILLINOIS FED. AID PROJECT

FINAL SURVEY	NOTE BOOK	NO.
	SURVEYED	
	PLOTTED	
	TEMPLATE	
	AREAS	
	AREAS CHECKED	

BY	DATE

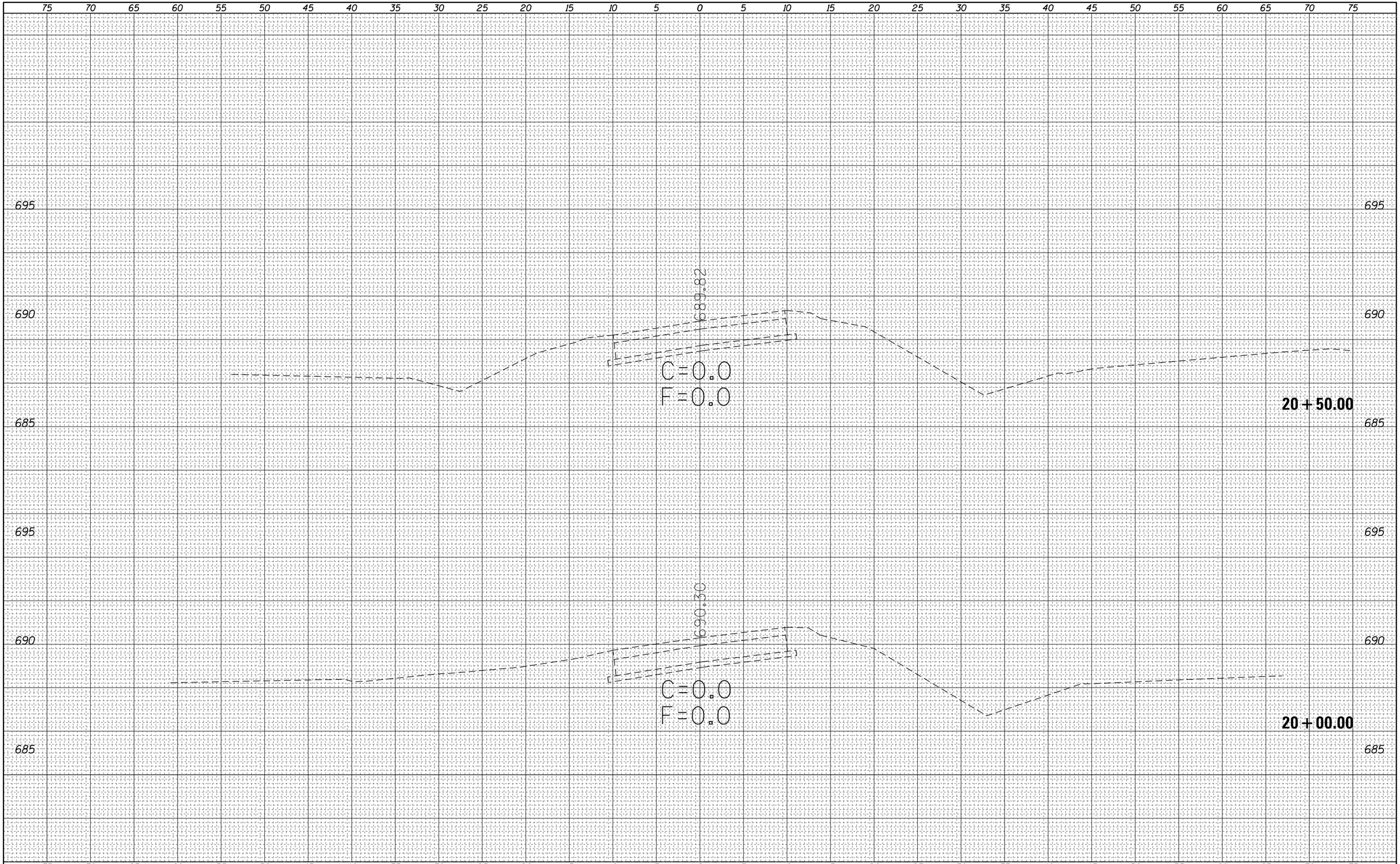

ORIGINAL SURVEY	NOTE BOOK	NO.
	SURVEYED	
	PLOTTED	
	TEMPLATE	
	AREAS	
	AREAS CHECKED	

BY	DATE

FILE NAME =	USER NAME = steffenmk	DESIGNED -	REVISED -
c:\pw_work\pwidot\steffenmk\d0158776\D774423-sht-ExHarrison.dgn		DRAWN -	REVISED -
	PLOT SCALE = 10.0000 ' / in.	CHECKED -	REVISED -
Default	PLOT DATE = 5/7/2014	DATE -	REVISED -

STATE OF ILLINOIS
DEPARTMENT OF TRANSPORTATION

CROSS SECTIONS
EX. E. HARRISON

SCALE: 5 | SHEET 12 OF 26 SHEETS | STA. | TO STA.

F.A.P. RTE.	SECTION	COUNTY	TOTAL SHEETS	SHEET NO.
91	5N	Coles	271	225

CONTRACT NO. 74423

ILLINOIS | FED. AID PROJECT

FINAL SURVEY	NOTE BOOK	NO.
	SURVEYED	
	PLOTTED	
	TEMPLATE	
	AREAS	
	AREAS CHECKED	

BY	DATE

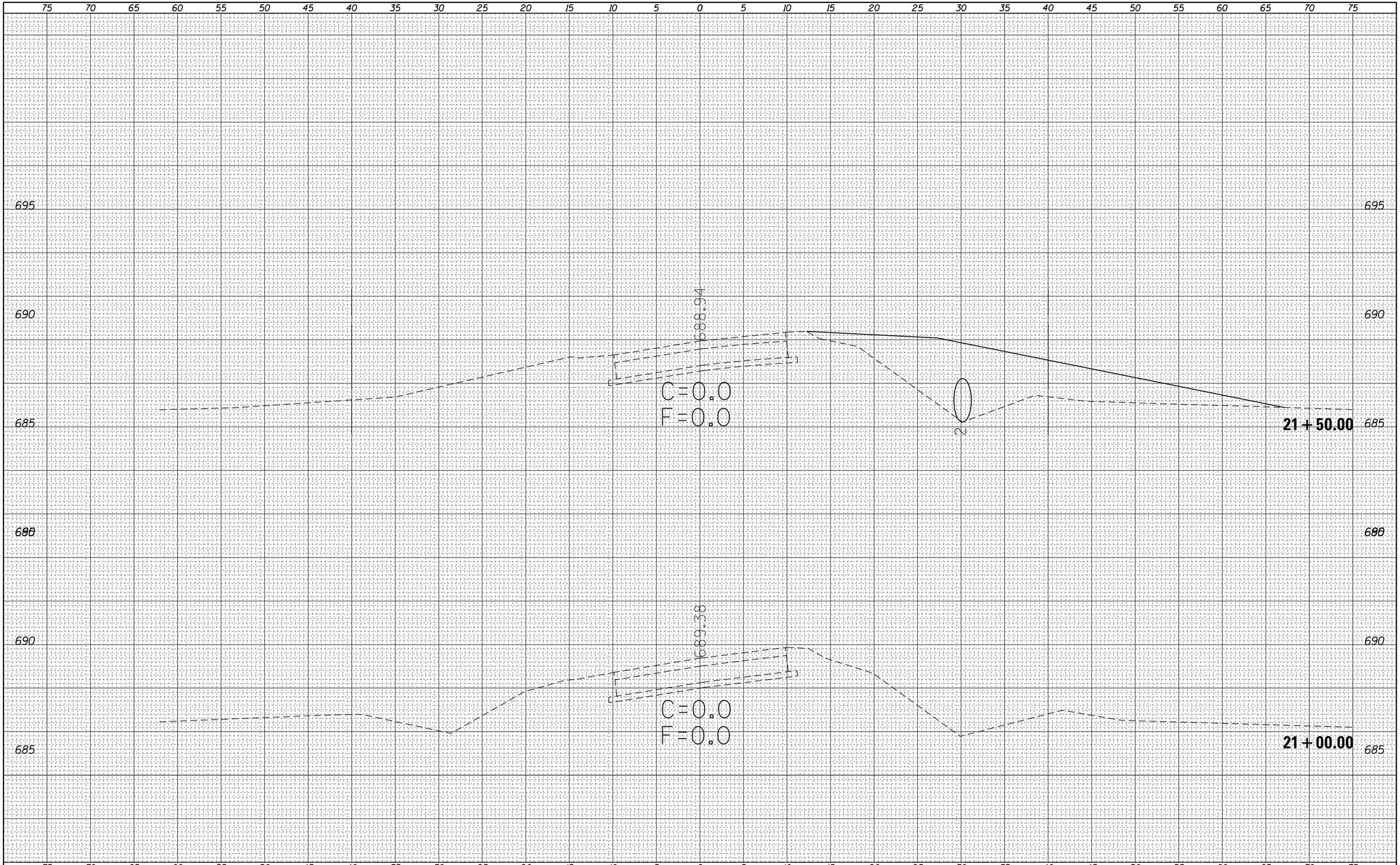

ORIGINAL SURVEY	NOTE BOOK	NO.
	SURVEYED	
	PLOTTED	
	TEMPLATE	
	AREAS	
	AREAS CHECKED	

BY	DATE

FILE NAME = c:\pw_work\pwidot\steffenmk\d0158776\D774423-xsc-sht-ExHarrison.dgn	USER NAME = steffenmk	DESIGNED -	REVISED -
		DRAWN -	REVISED -
	PLOT SCALE = 10.0000 ' / in.	CHECKED -	REVISED -
Default	PLOT DATE = 5/7/2014	DATE -	REVISED -

STATE OF ILLINOIS
DEPARTMENT OF TRANSPORTATION

CROSS SECTIONS
EX. E. HARRISON

SCALE: 5 | SHEET 13 OF 26 SHEETS | STA. | TO STA.

F.A.P. RTE.	SECTION	COUNTY	TOTAL SHEETS	SHEET NO.
91	5N	Coles	271	226

CONTRACT NO. 74423

ILLINOIS | FED. AID PROJECT

FINAL SURVEY	NOTE BOOK	NO.
SURVEYED		
PLOTTED		
TEMPLATE		
AREAS		
AREAS CHECKED		

BY	DATE

ORIGINAL SURVEY	NOTE BOOK	NO.
SURVEYED		
PLOTTED		
TEMPLATE		
AREAS		
AREAS CHECKED		

BY	DATE

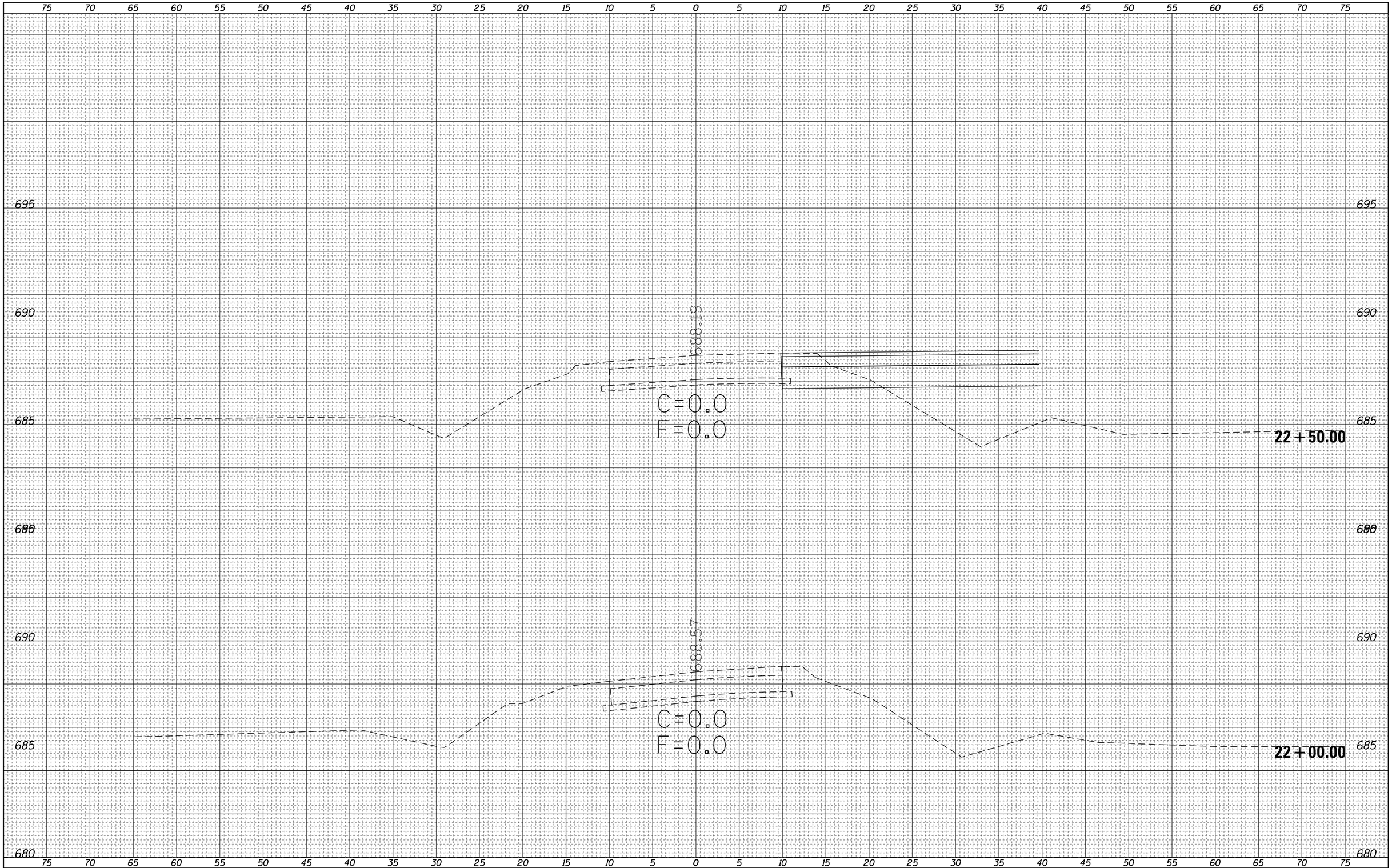

FILE NAME =	USER NAME = steffenmk	DESIGNED -	REVISED -
c:\pw_work\pwidot\steffenmk\d0158776\D774423-xsc-sht-ExHarrison.dgn		DRAWN -	REVISED -
	PLOT SCALE = 10.0000 ' / in.	CHECKED -	REVISED -
Default	PLOT DATE = 5/7/2014	DATE -	REVISED -

STATE OF ILLINOIS
DEPARTMENT OF TRANSPORTATION

CROSS SECTIONS
EX. E. HARRISON

SCALE: 5 | SHEET 14 OF 26 SHEETS | STA. | TO STA.

F.A.P. RTE.	SECTION	COUNTY	TOTAL SHEETS	SHEET NO.
91	5N	Coles	271	227

CONTRACT NO. 74423

ILLINOIS | FED. AID PROJECT

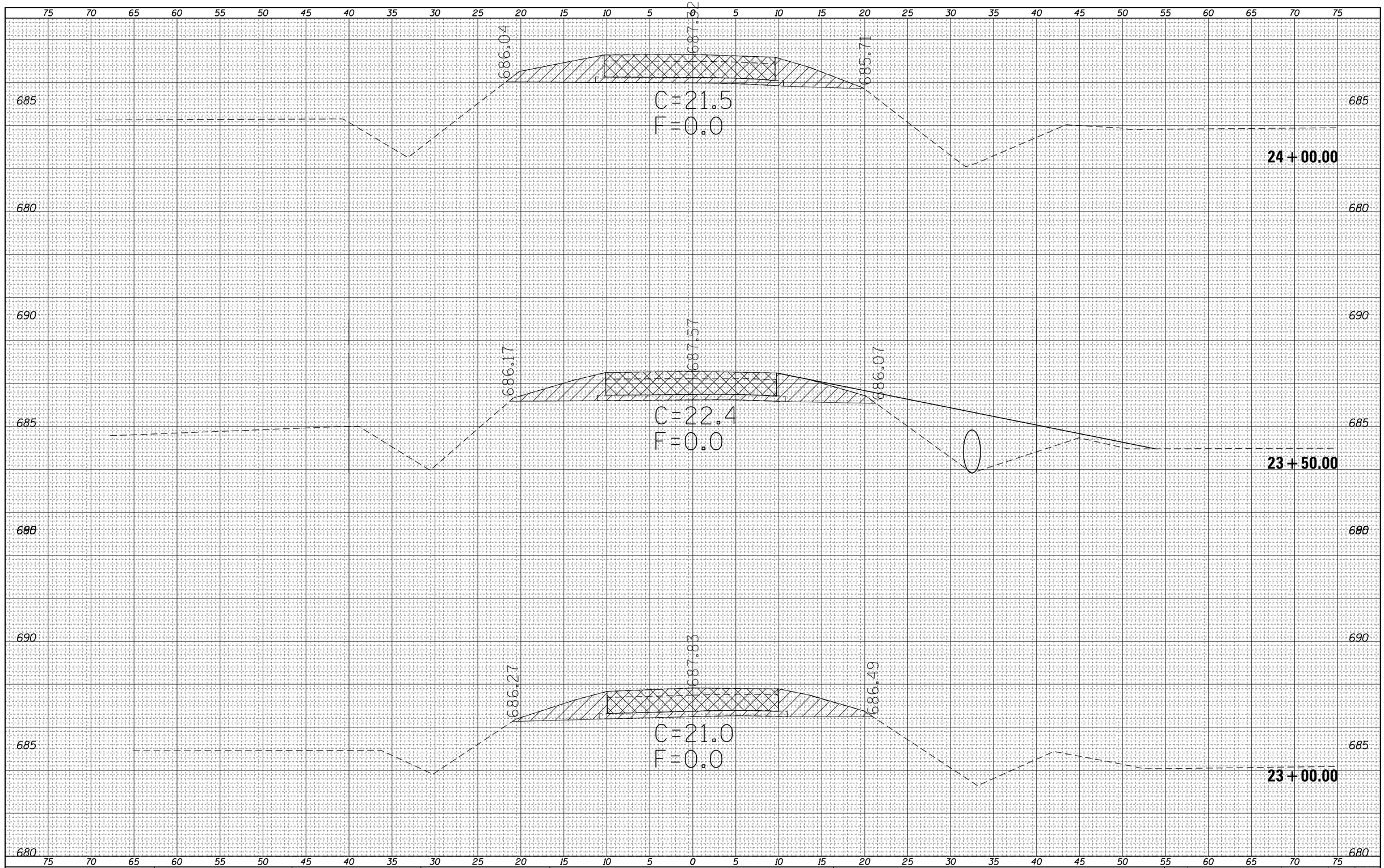

FINAL SURVEY

NO.	NOTE BOOK	SURVEYED	PLOTTED	TEMPLATE	AREAS	AREAS CHECKED	BY	DATE

ORIGINAL SURVEY

NO.	NOTE BOOK	SURVEYED	PLOTTED	TEMPLATE	AREAS	AREAS CHECKED	BY	DATE

FILE NAME = c:\pw_work\pwidot\steffenmk\d0158776\D774423-sht-ExHarrison.dgn	USER NAME = steffenmk	DESIGNED -	REVISED -
		DRAWN -	REVISED -
	PLOT SCALE = 10.0000 ' / in.	CHECKED -	REVISED -
Default	PLOT DATE = 5/7/2014	DATE -	REVISED -

STATE OF ILLINOIS
DEPARTMENT OF TRANSPORTATION

CROSS SECTIONS
EX. E. HARRISON

SCALE: 5 | SHEET 15 OF 26 SHEETS | STA. | TO STA.

F.A.P. RTE.	SECTION	COUNTY	TOTAL SHEETS	SHEET NO.
91	5N	Coles	271	228
		CONTRACT NO. 74423		
	ILLINOIS FED. AID PROJECT			

FINAL SURVEY	NOTE BOOK	NO.
SURVEYED		
PLOTTED		
TEMPLATE		
AREAS		
AREAS CHECKED		

BY	DATE

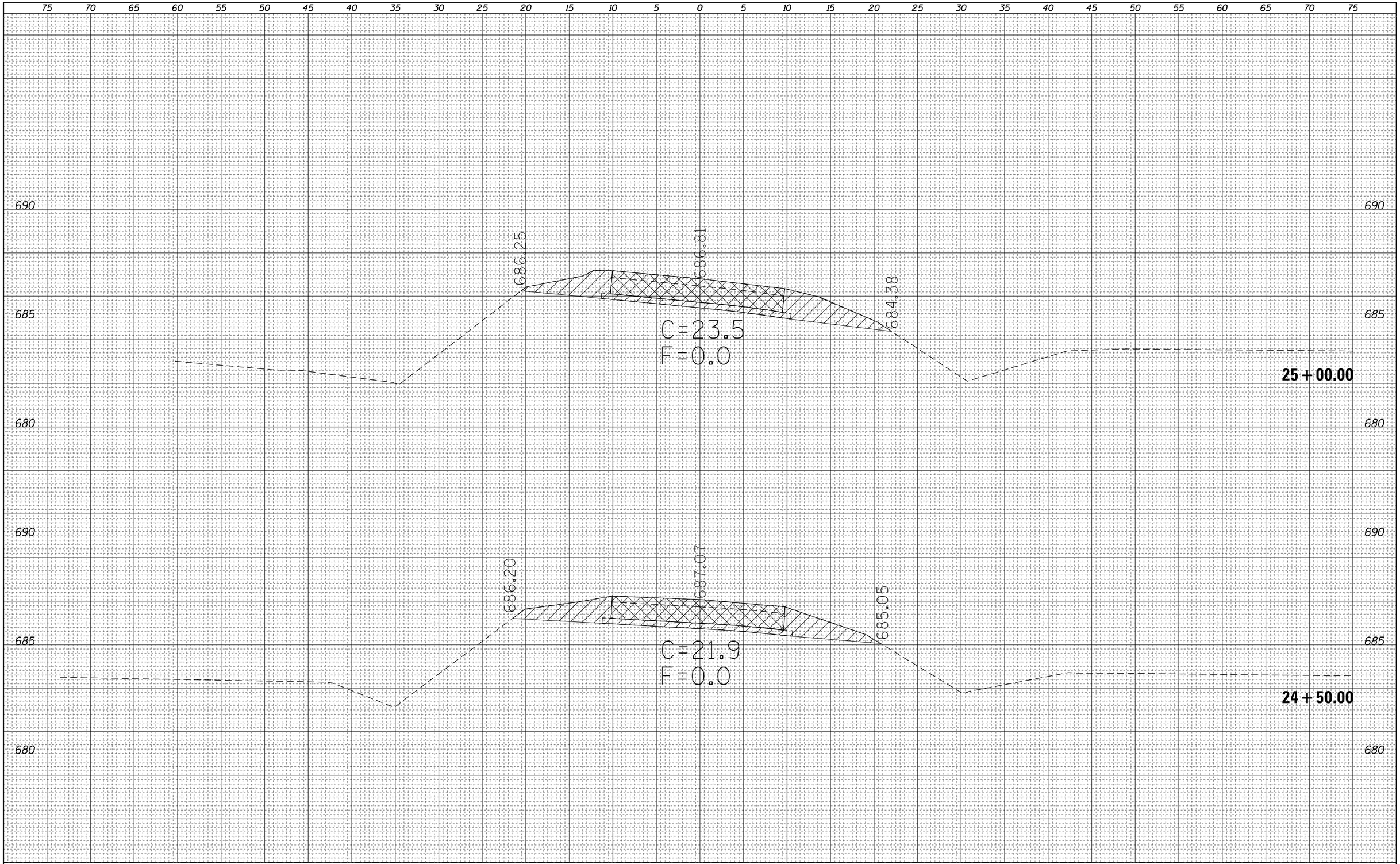

ORIGINAL SURVEY	NOTE BOOK	NO.
SURVEYED		
PLOTTED		
TEMPLATE		
AREAS		
AREAS CHECKED		

BY	DATE

FILE NAME =	USER NAME = steffenmk	DESIGNED -	REVISED -
c:\pw_work\pwidot\steffenmk\d0158776\D774423-xsc-sht-ExHarrison.dgn		DRAWN -	REVISED -
	PLOT SCALE = 10.0000 ' / in.	CHECKED -	REVISED -
Default	PLOT DATE = 5/7/2014	DATE -	REVISED -

STATE OF ILLINOIS
DEPARTMENT OF TRANSPORTATION

CROSS SECTIONS
EX. E. HARRISON

SCALE: 5 | SHEET 16 OF 26 SHEETS | STA. | TO STA.

F.A.P. RTE.	SECTION	COUNTY	TOTAL SHEETS	SHEET NO.
91	5N	Coles	271	229

CONTRACT NO. 74423

ILLINOIS FED. AID PROJECT

FINAL SURVEY	NOTE BOOK	NO.
	SURVEYED	
	PLOTTED	
	TEMPLATE	
	AREAS	
	AREAS CHECKED	

BY	DATE

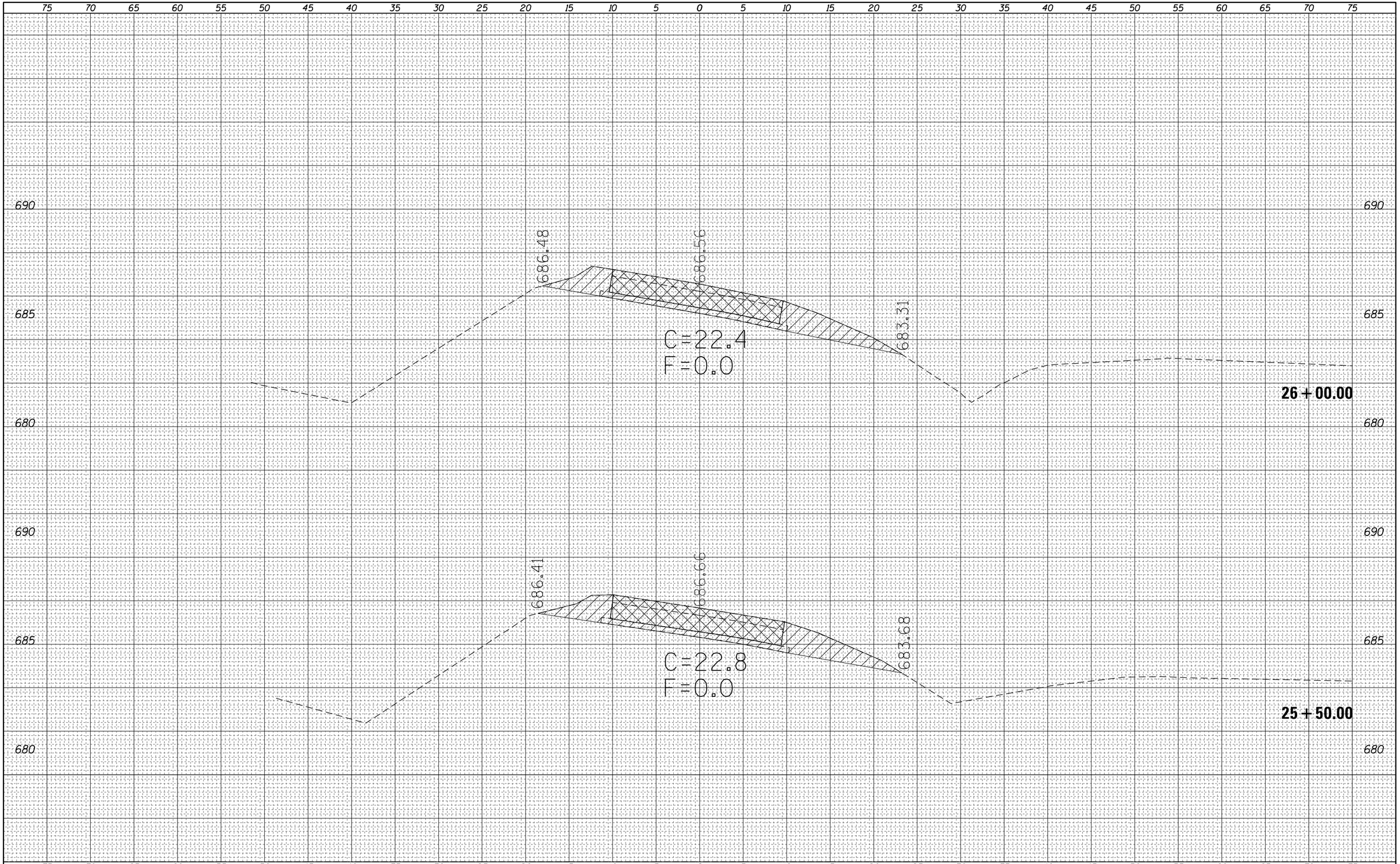

ORIGINAL SURVEY	NOTE BOOK	NO.
	SURVEYED	
	PLOTTED	
	TEMPLATE	
	AREAS	
	AREAS CHECKED	

BY	DATE

FILE NAME =	USER NAME = steffenmk	DESIGNED -	REVISED -
c:\pw_work\pwidot\steffenmk\d0158776\D774423-xsc-sht-ExHarrison.dgn		DRAWN -	REVISED -
	PLOT SCALE = 10.0000 ' / in.	CHECKED -	REVISED -
Default	PLOT DATE = 5/7/2014	DATE -	REVISED -

STATE OF ILLINOIS
DEPARTMENT OF TRANSPORTATION

CROSS SECTIONS
EX. E. HARRISON

SCALE: 5 | SHEET 17 OF 26 SHEETS | STA. | TO STA.

F.A.P. RTE.	SECTION	COUNTY	TOTAL SHEETS	SHEET NO.
91	5N	Coles	271	230

CONTRACT NO. 74423

ILLINOIS | FED. AID PROJECT

FINAL SURVEY	NOTE BOOK	NO.
	SURVEYED	
	PLOTTED	
	TEMPLATE	
	AREAS	
	AREAS CHECKED	

BY	DATE

ORIGINAL SURVEY	NOTE BOOK	NO.
	SURVEYED	
	PLOTTED	
	TEMPLATE	
	AREAS	
	AREAS CHECKED	

BY	DATE

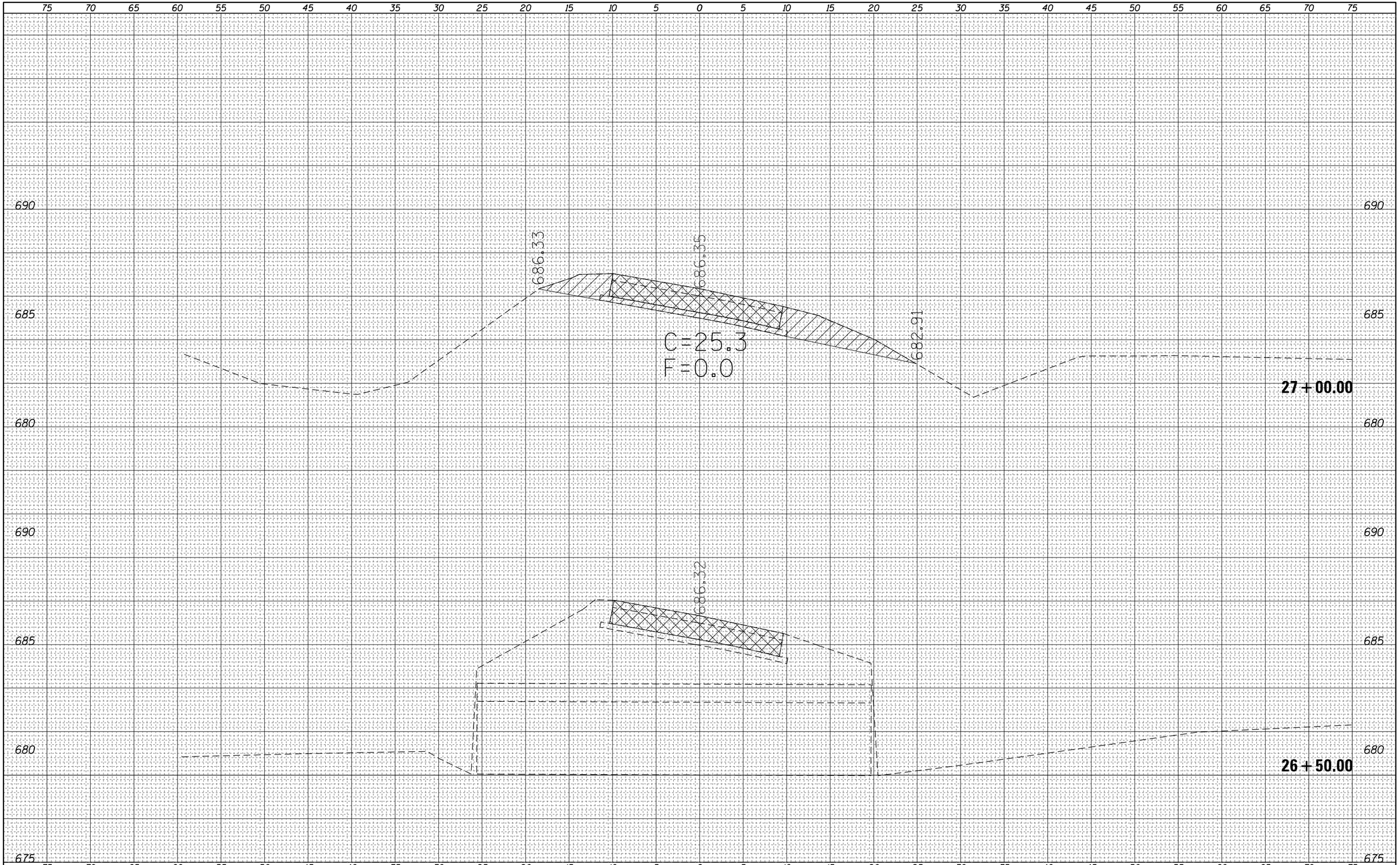

FILE NAME = c:\pw_work\pwidot\steffenmk\d0158776\D774423-xsc-sht-ExHarrison.dgn	USER NAME = steffenmk	DESIGNED -	REVISED -
		DRAWN -	REVISED -
	PLOT SCALE = 10.0000 ' / in.	CHECKED -	REVISED -
Default	PLOT DATE = 5/7/2014	DATE -	REVISED -

STATE OF ILLINOIS
DEPARTMENT OF TRANSPORTATION

CROSS SECTIONS
EX. E. HARRISON

SCALE: 5 | SHEET 18 OF 26 SHEETS | STA. | TO STA.

F.A.P. RTE.	SECTION	COUNTY	TOTAL SHEETS	SHEET NO.
91	5N	Coles	271	231

CONTRACT NO. 74423

ILLINOIS | FED. AID PROJECT

FINAL SURVEY	NOTE BOOK	SURVEYED	BY	DATE
		PLOTTED		
		TEMPLATE		
		AREAS		
NO.		AREAS CHECKED		

ORIGINAL SURVEY	NOTE BOOK	SURVEYED	BY	DATE
		PLOTTED		
		TEMPLATE		
		AREAS		
NO.		AREAS CHECKED		

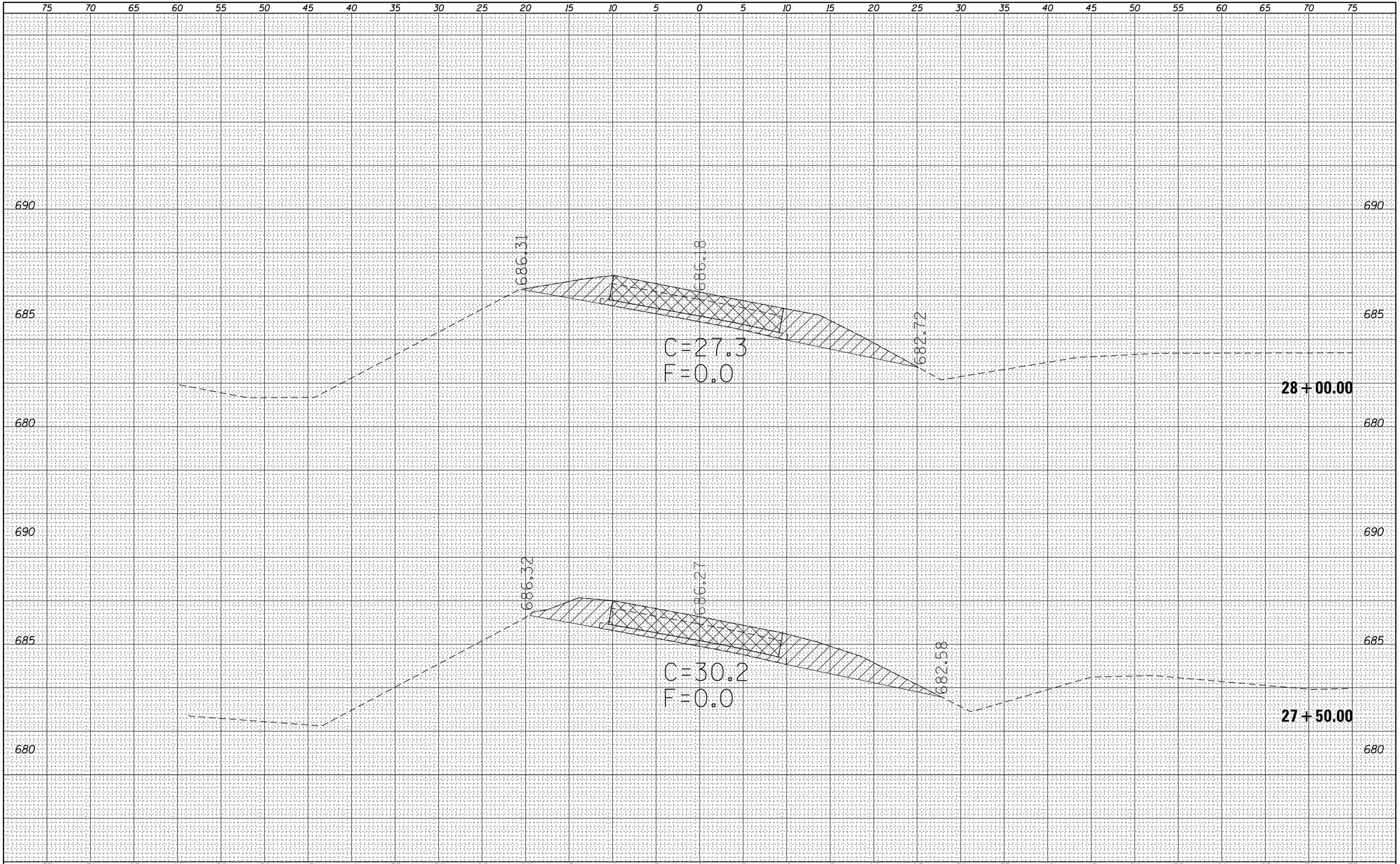

FILE NAME = c:\pw_work\pwidot\steffenmk\d0158776\D774423-xsc-sht-ExHarrison.dgn	USER NAME = steffenmk	DESIGNED -	REVISED -
		DRAWN -	REVISED -
	PLOT SCALE = 10.0000 ' / in.	CHECKED -	REVISED -
Default	PLOT DATE = 5/7/2014	DATE -	REVISED -

STATE OF ILLINOIS
DEPARTMENT OF TRANSPORTATION

CROSS SECTIONS
EX. E. HARRISON

SCALE: 5 | SHEET 19 OF 26 SHEETS | STA. | TO STA.

F.A.P. RTE.	SECTION	COUNTY	TOTAL SHEETS	SHEET NO.
91	5N	Coles	271	232

CONTRACT NO. 74423

ILLINOIS | FED. AID PROJECT

FINAL SURVEY	NOTE BOOK	NO.
	SURVEYED	BY
	PLOTTED	
	TEMPLATE	
	AREAS	DATE
	AREAS CHECKED	

ORIGINAL SURVEY	NOTE BOOK	NO.
	SURVEYED	BY
	PLOTTED	
	TEMPLATE	
	AREAS	DATE
	AREAS CHECKED	

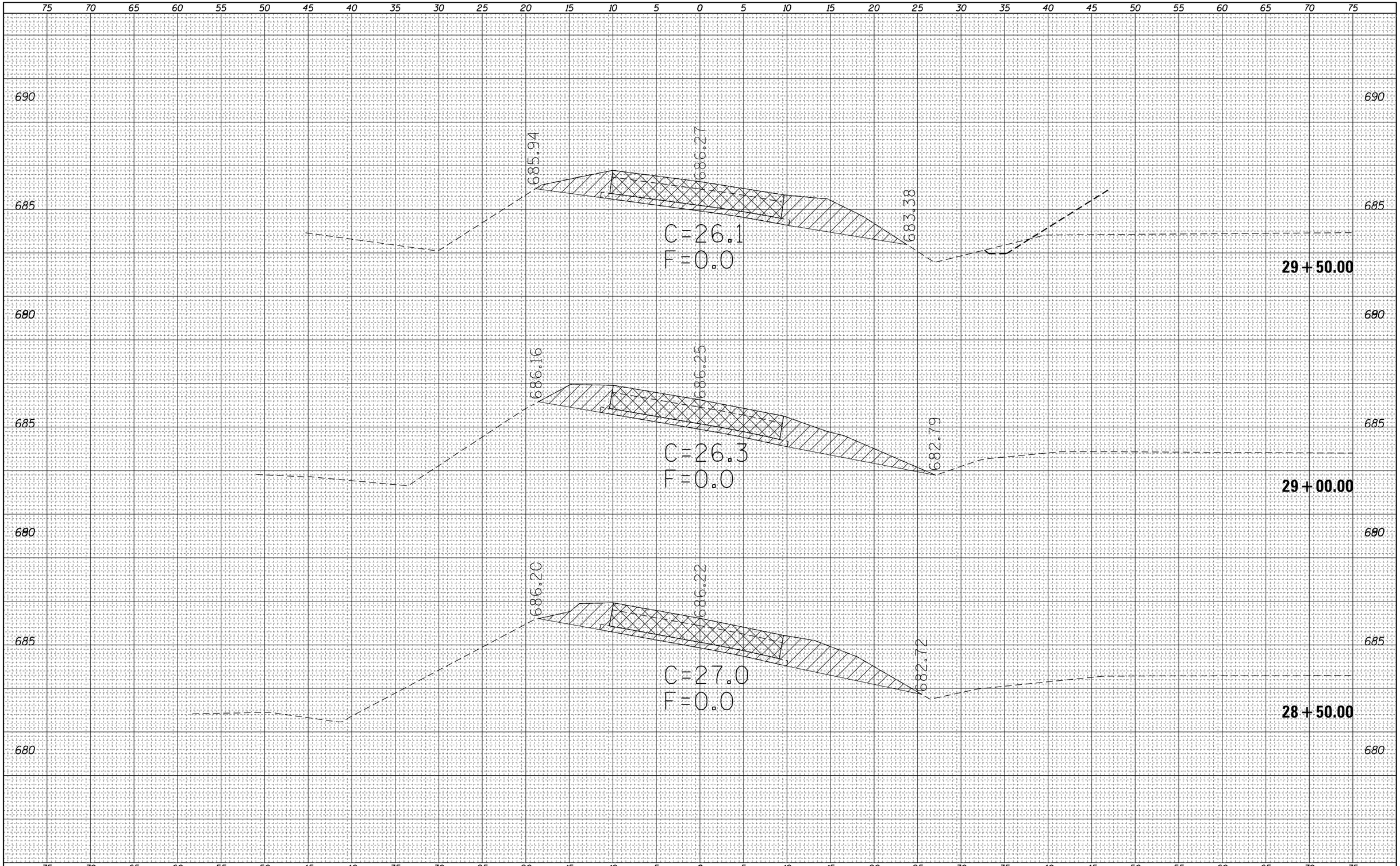

FILE NAME = c:\pw_work\pwidot\steffenmk\d0158776\D774423-xsc-sht-ExHarrison.dgn	USER NAME = steffenmk	DESIGNED -	REVISED -
		DRAWN -	REVISED -
	PLOT SCALE = 10.0000 ' / in.	CHECKED -	REVISED -
Default	PLOT DATE = 5/7/2014	DATE -	REVISED -

STATE OF ILLINOIS
DEPARTMENT OF TRANSPORTATION

CROSS SECTIONS
EX. E. HARRISON

SCALE: 5 | SHEET 20 OF 26 SHEETS | STA. | TO STA.

F.A.P. RTE.	SECTION	COUNTY	TOTAL SHEETS	SHEET NO.
91	5N	Coles	271	233

CONTRACT NO. 74423

ILLINOIS | FED. AID PROJECT

FINAL SURVEY	NOTE BOOK	SURVEYED	BY	DATE
		PLOTTED		
		TEMPLATE		
		AREAS		
NO.		AREAS CHECKED		

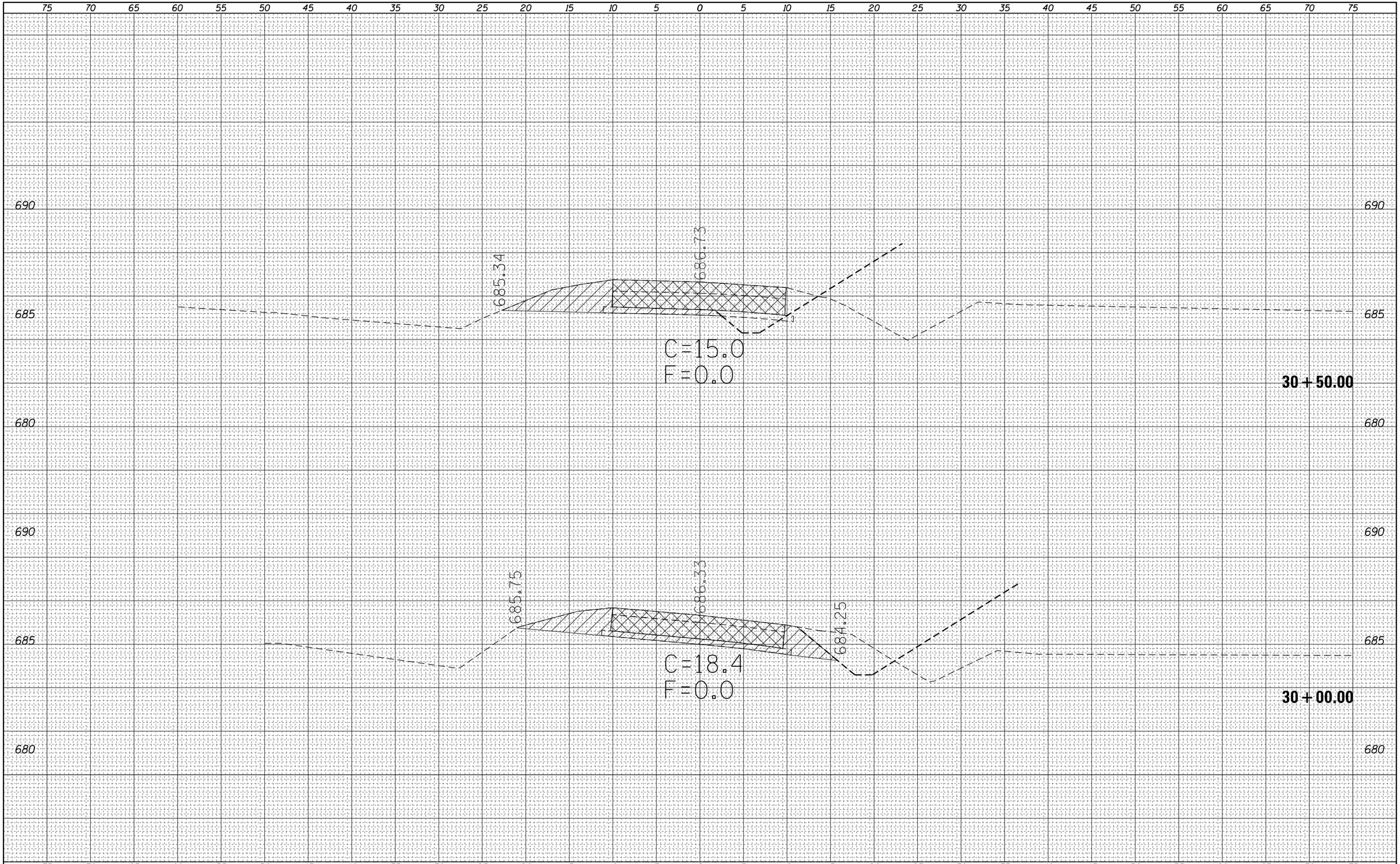

ORIGINAL SURVEY	NOTE BOOK	SURVEYED	BY	DATE
		PLOTTED		
		TEMPLATE		
		AREAS		
NO.		AREAS CHECKED		

FILE NAME =	USER NAME = steffenmk	DESIGNED -	REVISED -
c:\pw_work\pwidot\steffenmk\d0158776\D774423-sht-ExHarrison.dgn		DRAWN -	REVISED -
	PLOT SCALE = 10.0000 ' / in.	CHECKED -	REVISED -
Default	PLOT DATE = 5/7/2014	DATE -	REVISED -

STATE OF ILLINOIS
DEPARTMENT OF TRANSPORTATION

CROSS SECTIONS
EX. E. HARRISON

SCALE: 5 | SHEET 21 OF 26 SHEETS | STA. | TO STA.

F.A.P. RTE.	SECTION	COUNTY	TOTAL SHEETS	SHEET NO.
91	5N	Coles	271	234

CONTRACT NO. 74423

ILLINOIS FED. AID PROJECT

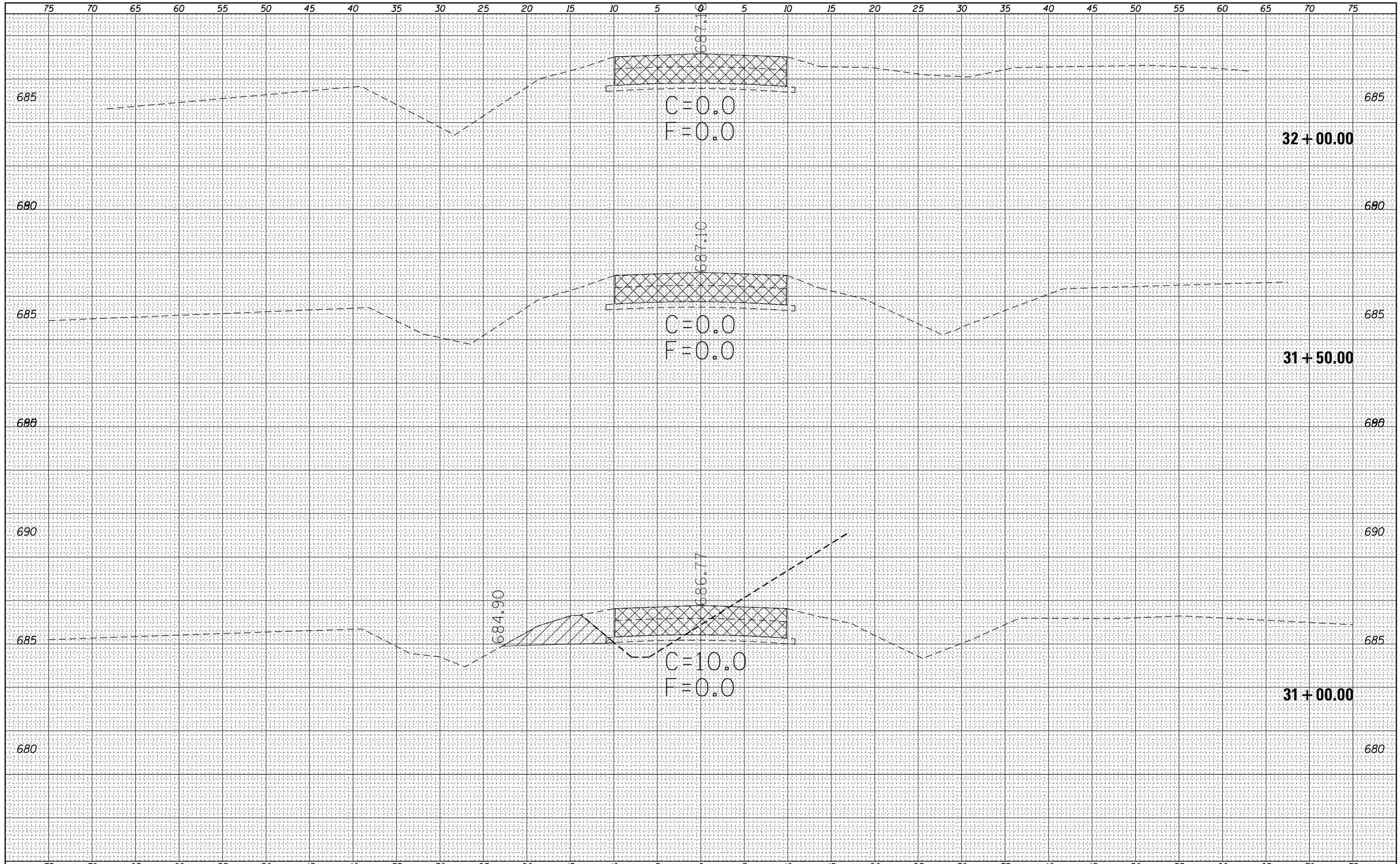

FINAL SURVEY

NO.	NOTE BOOK	SURVEYED	BY	DATE
		PLOTTED		
		TEMPLATE		
		AREAS		
		AREAS CHECKED		

ORIGINAL SURVEY

NO.	NOTE BOOK	SURVEYED	BY	DATE
		PLOTTED		
		TEMPLATE		
		AREAS		
		AREAS CHECKED		

FILE NAME =	USER NAME = steffenmk	DESIGNED -	REVISED -
c:\pw_work\pwidot\steffenmk\d0158776\D774423-xsc-sht-ExHarrison.dgn		DRAWN -	REVISED -
	PLOT SCALE = 10.0000 ' / in.	CHECKED -	REVISED -
Default	PLOT DATE = 5/7/2014	DATE -	REVISED -

STATE OF ILLINOIS
DEPARTMENT OF TRANSPORTATION

CROSS SECTIONS
EX. E. HARRISON

SCALE: 5 | SHEET 22 OF 26 SHEETS | STA. | TO STA.

F.A.P. RTE.	SECTION	COUNTY	TOTAL SHEETS	SHEET NO.
91	5N	Coles	271	235

CONTRACT NO. 74423

ILLINOIS | FED. AID PROJECT

FINAL SURVEY	NOTE BOOK	SURVEYED	BY	DATE
		PLOTTED		
		TEMPLATE		
NO.		AREAS CHECKED		

ORIGINAL SURVEY	NOTE BOOK	SURVEYED	BY	DATE
		PLOTTED		
		TEMPLATE		
NO.		AREAS CHECKED		

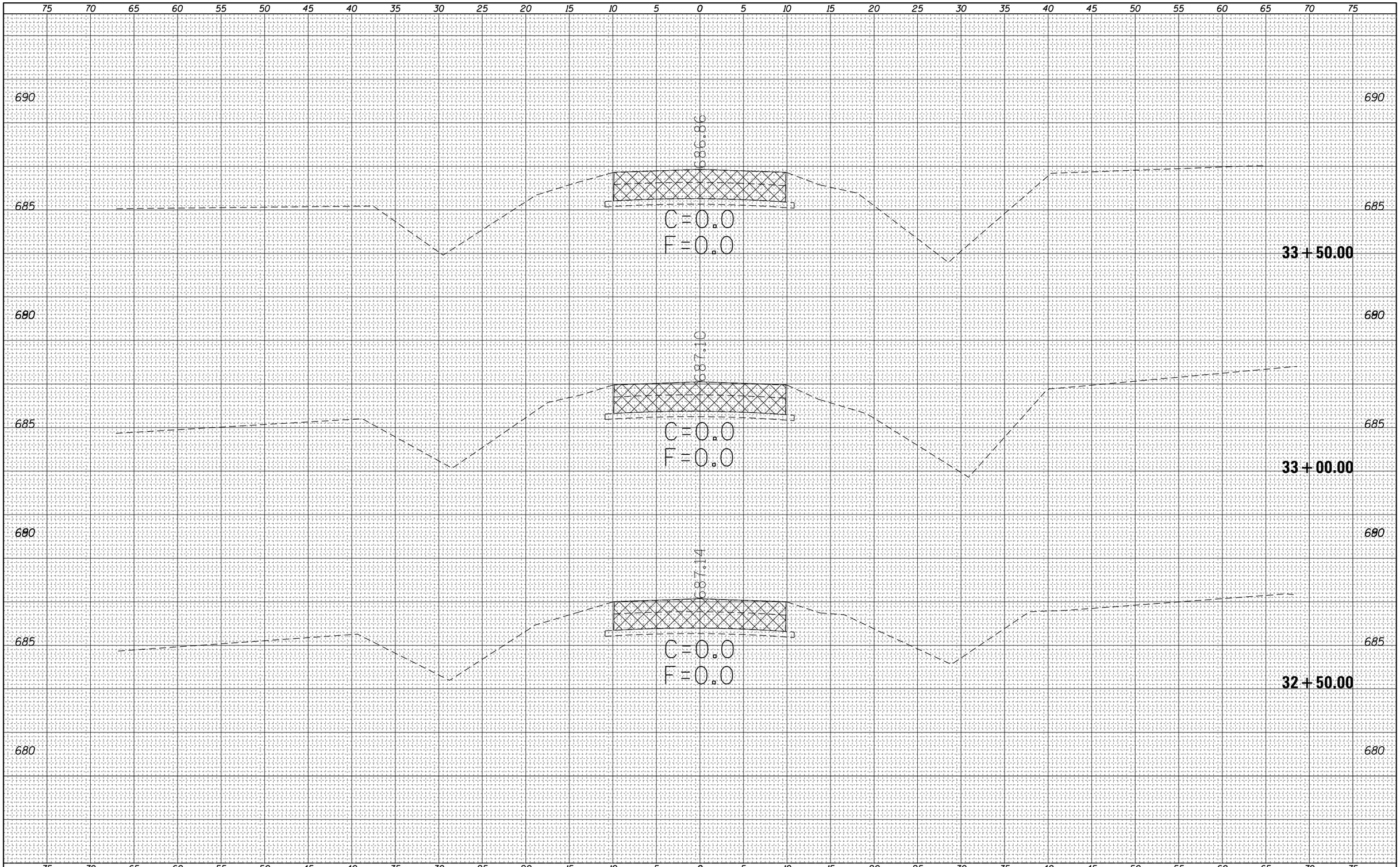

FILE NAME = c:\pw_work\pwidot\steffenmk\d0158776\D774423-sc-sht-ExHarrison.dgn	USER NAME = steffenmk	DESIGNED -	REVISED -
		DRAWN -	REVISED -
	PLOT SCALE = 10.0000 ' / in.	CHECKED -	REVISED -
Default	PLOT DATE = 5/7/2014	DATE -	REVISED -

STATE OF ILLINOIS
DEPARTMENT OF TRANSPORTATION

CROSS SECTIONS
EX. E. HARRISON

SCALE: 5 | SHEET 23 OF 26 SHEETS | STA. | TO STA.

F.A.P. RTE.	SECTION	COUNTY	TOTAL SHEETS	SHEET NO.
91	5N	Coles	271	236
		CONTRACT NO. 74423		
		ILLINOIS FED. AID PROJECT		

FINAL SURVEY	NOTE BOOK	NO.
	SURVEYED	
	PLOTTED	
	TEMPLATE	
	AREAS	
	AREAS CHECKED	

BY	DATE

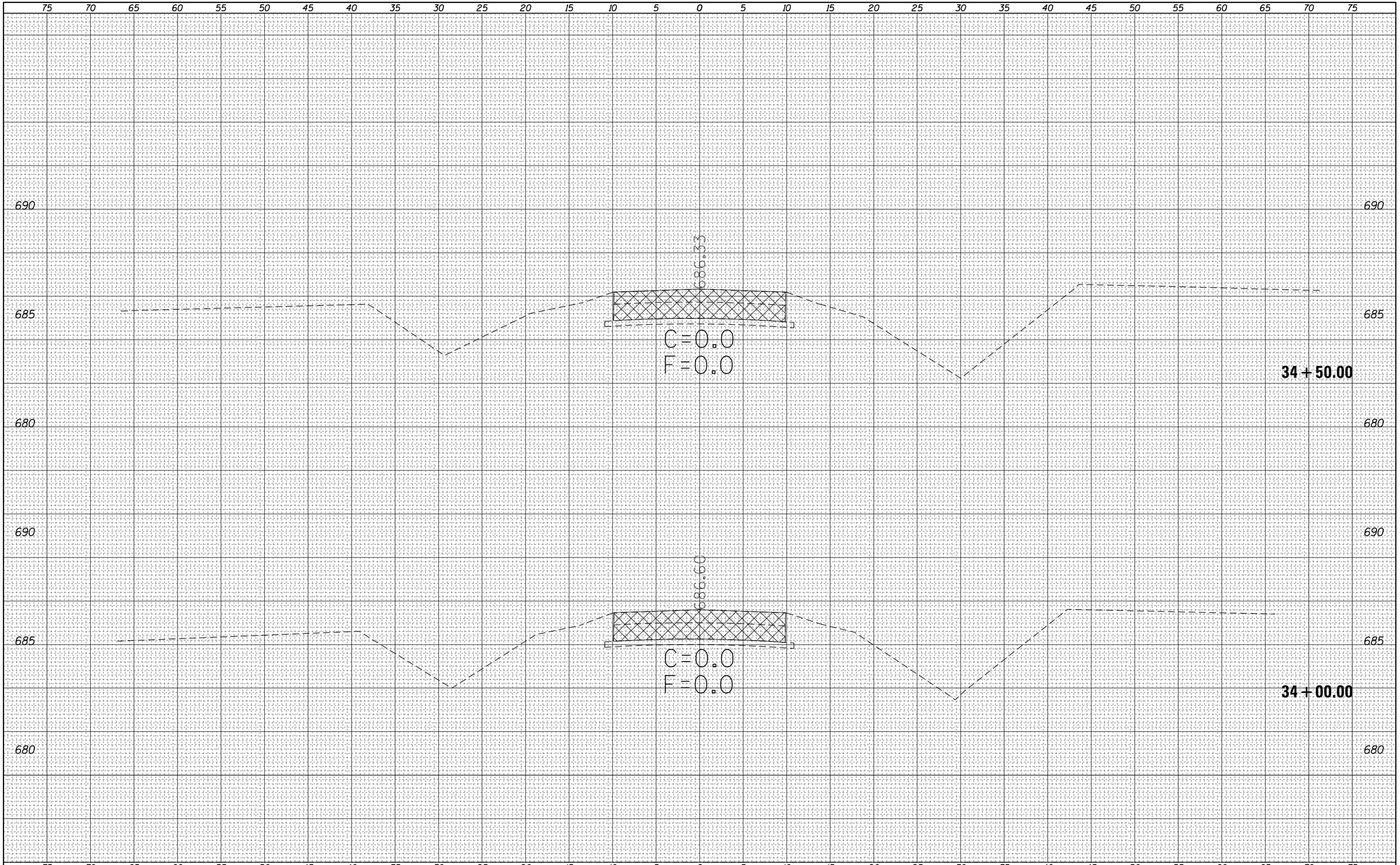

ORIGINAL SURVEY	NOTE BOOK	NO.
	SURVEYED	
	PLOTTED	
	TEMPLATE	
	AREAS	
	AREAS CHECKED	

BY	DATE

FILE NAME =	USER NAME = steffenmk	DESIGNED -	REVISED -
c:\pw_work\pwidot\steffenmk\d0158776\D774423-xsc-sht-ExHarrison.dgn		DRAWN -	REVISED -
	PLOT SCALE = 10.0000 ' / in.	CHECKED -	REVISED -
Default	PLOT DATE = 5/7/2014	DATE -	REVISED -

STATE OF ILLINOIS
DEPARTMENT OF TRANSPORTATION

CROSS SECTIONS
EX. E. HARRISON

SCALE: 5 | SHEET 24 OF 26 SHEETS | STA. | TO STA.

F.A.P. RTE.	SECTION	COUNTY	TOTAL SHEETS	SHEET NO.
91	5N	Coles	271	237

CONTRACT NO. 74423

ILLINOIS FED. AID PROJECT

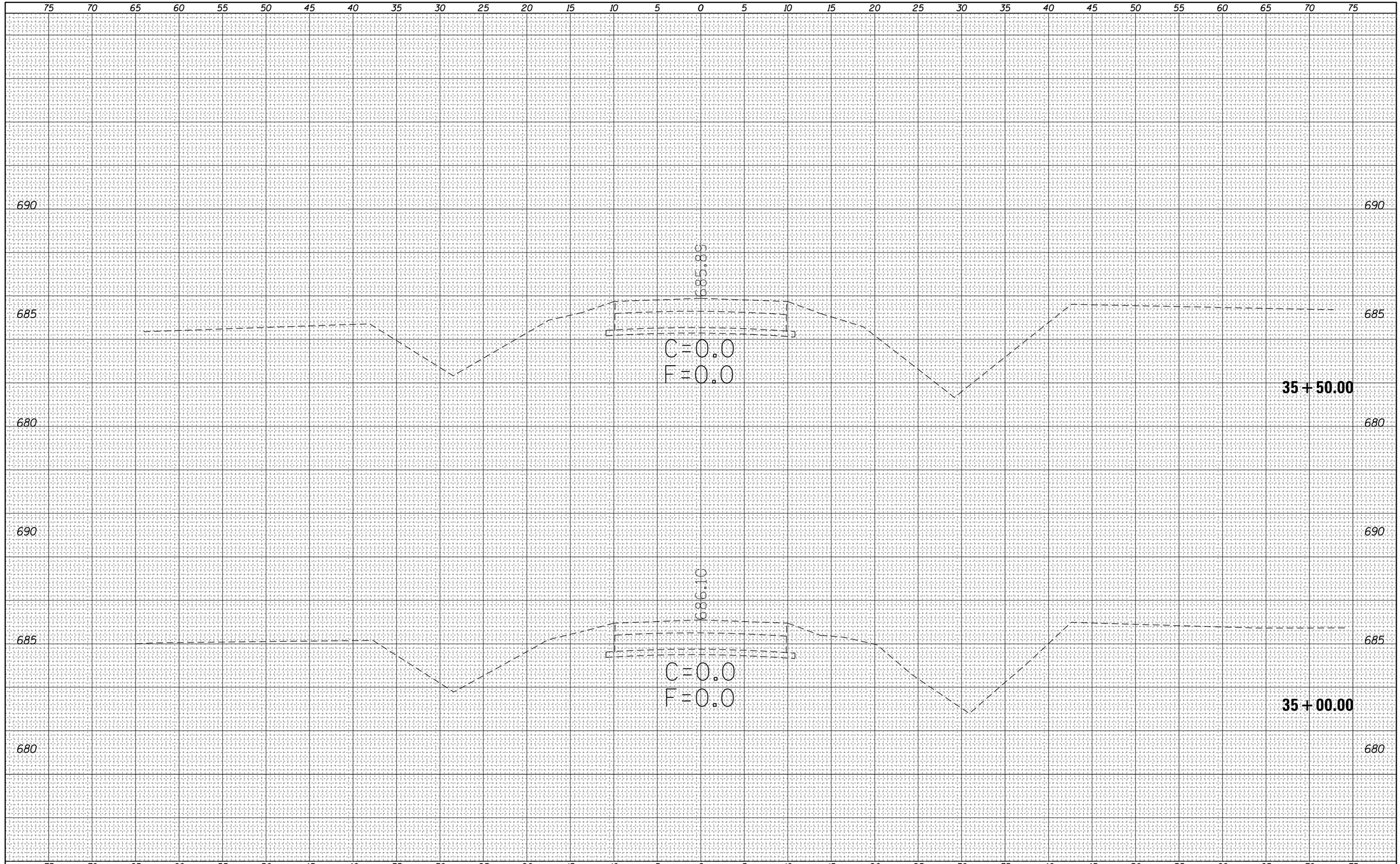

FINAL SURVEY	NOTE BOOK	NO.
SURVEYED		
PLOTTED		
TEMPLATE		
AREAS		
AREAS CHECKED		

BY	DATE

ORIGINAL SURVEY	NOTE BOOK	NO.
SURVEYED		
PLOTTED		
TEMPLATE		
AREAS		
AREAS CHECKED		

BY	DATE

FILE NAME =	USER NAME = steffenmk	DESIGNED -	REVISED -
c:\pw_work\pwidot\steffenmk\d0158776\D774423-sht-ExHarrison.dgn		DRAWN -	REVISED -
	PLOT SCALE = 10.0000 ' / in.	CHECKED -	REVISED -
Default	PLOT DATE = 5/7/2014	DATE -	REVISED -

STATE OF ILLINOIS
DEPARTMENT OF TRANSPORTATION

CROSS SECTIONS
EX. E. HARRISON

SCALE: 5 | SHEET 25 OF 26 SHEETS | STA. | TO STA.

F.A.P. RTE.	SECTION	COUNTY	TOTAL SHEETS	SHEET NO.
91	5N	Coles	271	238

CONTRACT NO. 74423

ILLINOIS | FED. AID PROJECT

FINAL SURVEY	NOTE BOOK	NO.
SURVEYED		
PLOTTED		
TEMPLATE		
AREAS		
AREAS CHECKED		

BY	DATE

75 70 65 60 55 50 45 40 35 30 25 20 15 10 5 0 5 10 15 20 25 30 35 40 45 50 55 60 65 70 75

690

685

680

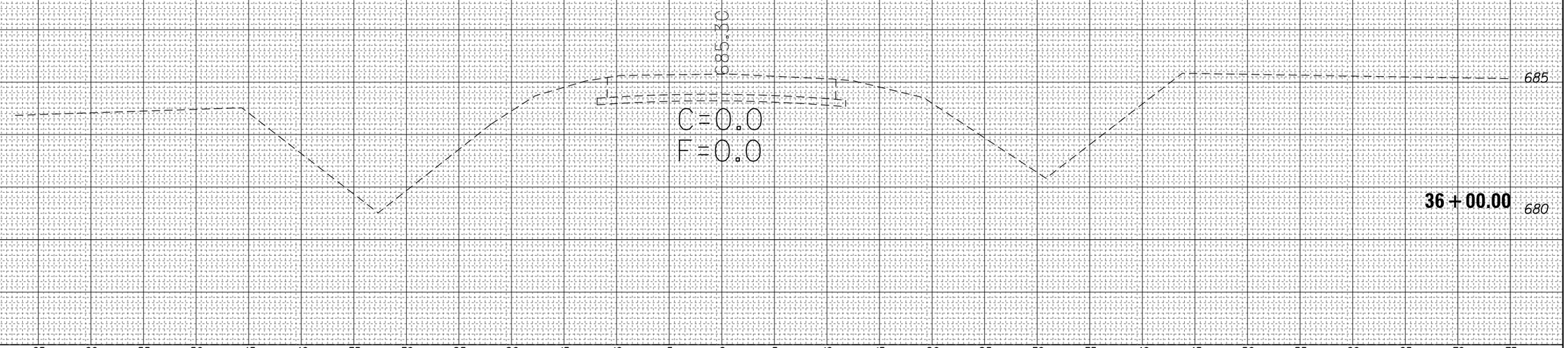

36 + 00.00

ORIGINAL SURVEY	NOTE BOOK	NO.
SURVEYED		
PLOTTED		
TEMPLATE		
AREAS		
AREAS CHECKED		

BY	DATE

FILE NAME =	USER NAME = steffenmk	DESIGNED -	REVISED -
c:\pw_work\pwidot\steffenmk\d0158776\D774423-xsc-sht-ExHarrison.dgn		DRAWN -	REVISED -
	PLOT SCALE = 10.0000 ' / in.	CHECKED -	REVISED -
Default	PLOT DATE = 5/7/2014	DATE -	REVISED -

STATE OF ILLINOIS
DEPARTMENT OF TRANSPORTATION

CROSS SECTIONS
EX. E. HARRISON

SCALE: 5 | SHEET 26 OF 26 SHEETS | STA. | TO STA.

F.A.P. RTE.	SECTION	COUNTY	TOTAL SHEETS	SHEET NO.
91	5N	Coles	271	239

CONTRACT NO. 74423

ILLINOIS | FED. AID PROJECT

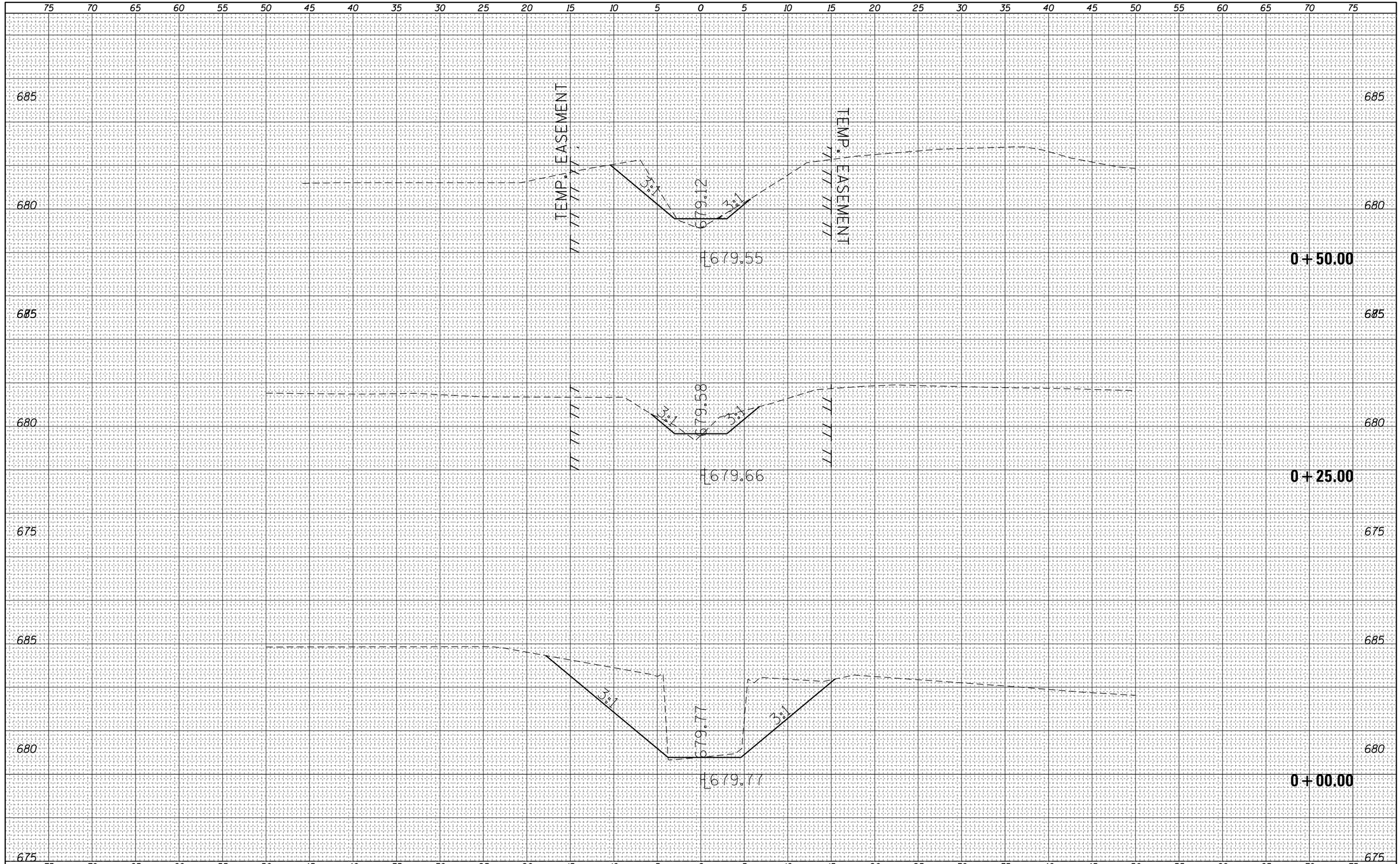

FINAL SURVEY	NOTE BOOK	NO.
SURVEYED		
PLOTTED		
TEMPLATE		
AREAS		
AREAS CHECKED		

BY	DATE

ORIGINAL SURVEY	NOTE BOOK	NO.
SURVEYED		
PLOTTED		
TEMPLATE		
AREAS		
AREAS CHECKED		

BY	DATE

FILE NAME =	USER NAME = steffenmk	DESIGNED -	REVISED -
c:\pw_work\pwidot\steffenmk\d0158776\D774423-sht-GradeDitch.dgn		DRAWN -	REVISED -
	PLOT SCALE = 10.0000 ' / in.	CHECKED -	REVISED -
Default	PLOT DATE = 5/7/2014	DATE -	REVISED -

STATE OF ILLINOIS
DEPARTMENT OF TRANSPORTATION

CROSS SECTIONS
DITCH GRADING

SCALE: 5 | SHEET 1 OF 7 SHEETS | STA. 0+00.00 | TO STA. 0+50.00

F.A.P. RTE.	SECTION	COUNTY	TOTAL SHEETS	SHEET NO.
91	5N	Coles	271	240

CONTRACT NO. 74423

ILLINOIS | FED. AID PROJECT

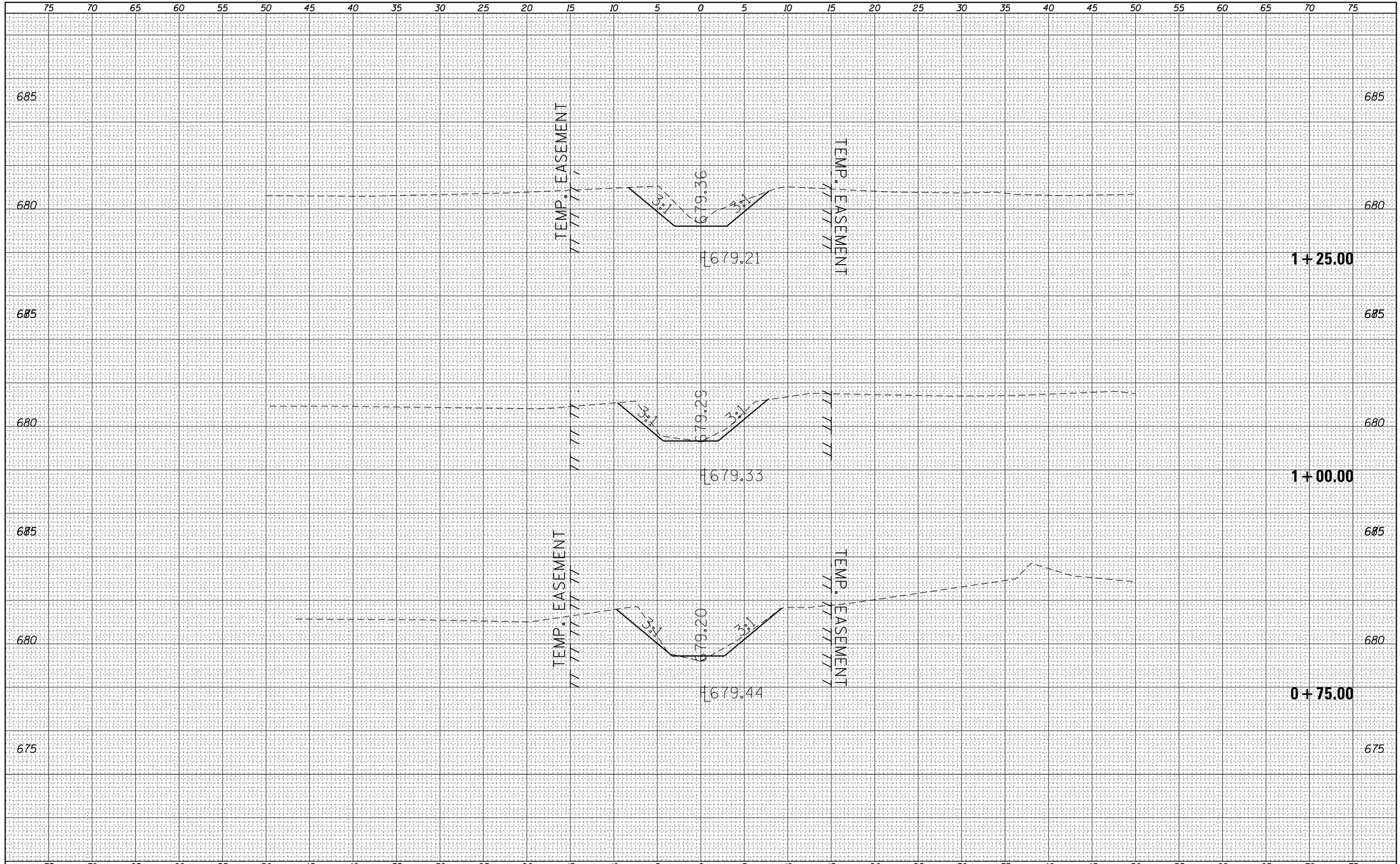

FINAL SURVEY	SURVEYED	BY	DATE
NOTE BOOK	PLOTTED		
NO.	TEMPLATE		
	AREAS		
	AREAS CHECKED		

ORIGINAL SURVEY	SURVEYED	BY	DATE
NOTE BOOK	PLOTTED		
NO.	TEMPLATE		
	AREAS		
	AREAS CHECKED		

FILE NAME =	USER NAME = steffenmk	DESIGNED -	REVISED -
c:\pw_work\pwidot\steffenmk\d0158776\D774423-sht-GradeDitch.dgn		DRAWN -	REVISED -
	PLOT SCALE = 10.0000 ' / in.	CHECKED -	REVISED -
Default	PLOT DATE = 5/7/2014	DATE -	REVISED -

STATE OF ILLINOIS
DEPARTMENT OF TRANSPORTATION

CROSS SECTIONS
DITCH GRADING

SCALE: 5 | SHEET 2 OF 7 SHEETS | STA. 0+75.00 | TO STA. 1+25.00

F.A.P. RTE.	SECTION	COUNTY	TOTAL SHEETS	SHEET NO.
91	5N	Coles	271	241

CONTRACT NO. 74423

ILLINOIS FED. AID PROJECT

FINAL SURVEY	NOTE BOOK	NO.
SURVEYED		
PLOTTED		
TEMPLATE		
AREAS		
AREAS CHECKED		

BY	DATE

ORIGINAL SURVEY	NOTE BOOK	NO.
SURVEYED		
PLOTTED		
TEMPLATE		
AREAS		
AREAS CHECKED		

BY	DATE

75 70 65 60 55 50 45 40 35 30 25 20 15 10 5 0 5 10 15 20 25 30 35 40 45 50 55 60 65 70 75

685

680

675

TEMP. EASEMENT

679.02

678.88

3:1

3:1

TEMP. EASEMENT

2+00.00

TEMP. EASEMENT

679.23

678.99

3:1

3:1

TEMP. EASEMENT

1+75.00

TEMP. EASEMENT

678.97

679.10

3:1

3:1

TEMP. EASEMENT

1+50.00

FILE NAME = c:\pw_work\pwidot\steffenmk\d0158776\D774423-sheet_sc-sht-GradeDitch.dgn	USER NAME = steffenmk	DESIGNED -	REVISED -
		DRAWN -	REVISED -
	PLOT SCALE = 10.0000 ' / in.	CHECKED -	REVISED -
Default	PLOT DATE = 5/7/2014	DATE -	REVISED -

STATE OF ILLINOIS
DEPARTMENT OF TRANSPORTATION

CROSS SECTIONS
DITCH GRADING

SCALE: 5 | SHEET 3 OF 7 SHEETS | STA. 1+50.00 | TO STA. 2+00.00

F.A.P. RTE.	SECTION	COUNTY	TOTAL SHEETS	SHEET NO.
91	5N	Coles	271	242
		CONTRACT NO. 74423		
		ILLINOIS FED. AID PROJECT		

FINAL SURVEY		BY	DATE
NOTE BOOK	SURVEYED		
NO.	PLOTTED		
	TEMPLATE		
	AREAS		
	AREAS CHECKED		

ORIGINAL SURVEY		BY	DATE
NOTE BOOK	SURVEYED		
NO.	PLOTTED		
	TEMPLATE		
	AREAS		
	AREAS CHECKED		

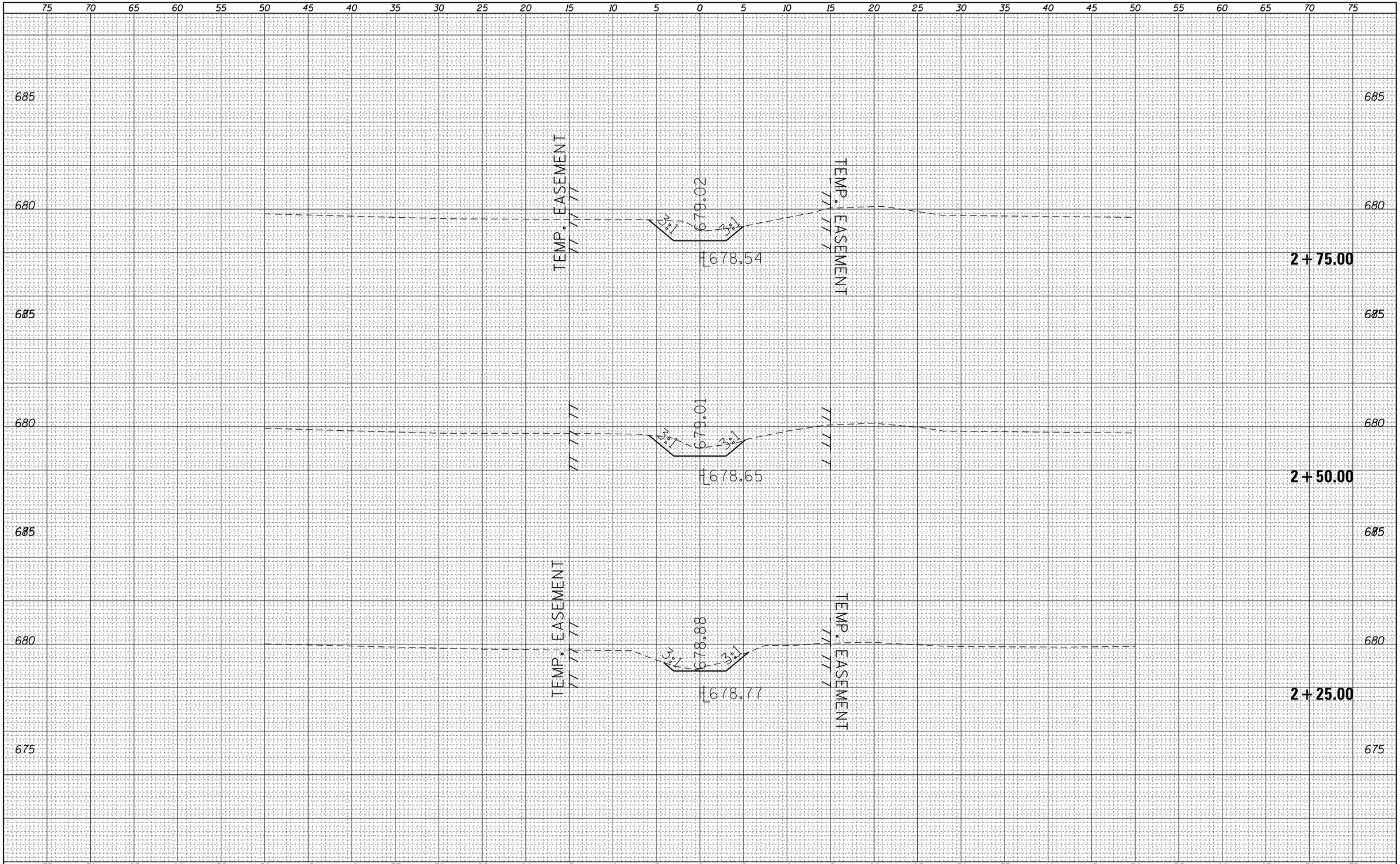

FILE NAME =	USER NAME = steffenmk	DESIGNED -	REVISED -
c:\pw_work\pwidot\steffenmk\d0158776\D774423-xsc-sht-GradeDitch.dgn		DRAWN -	REVISED -
	PLOT SCALE = 10.0000 ' / in.	CHECKED -	REVISED -
Default	PLOT DATE = 5/7/2014	DATE -	REVISED -

STATE OF ILLINOIS
DEPARTMENT OF TRANSPORTATION

CROSS SECTIONS
DITCH GRADING

SCALE: 5 | SHEET 4 OF 7 SHEETS | STA. 2+25.00 | TO STA. 2+75.00

F.A.P. RTE.	SECTION	COUNTY	TOTAL SHEETS	SHEET NO.
91	5N	Coles	271	243

CONTRACT NO. 74423

ILLINOIS FED. AID PROJECT

FINAL SURVEY	NOTE BOOK	NO.
SURVEYED		
PLOTTED		
TEMPLATE		
AREAS		
AREAS CHECKED		

BY	DATE

ORIGINAL SURVEY	NOTE BOOK	NO.
SURVEYED		
PLOTTED		
TEMPLATE		
AREAS		
AREAS CHECKED		

BY	DATE

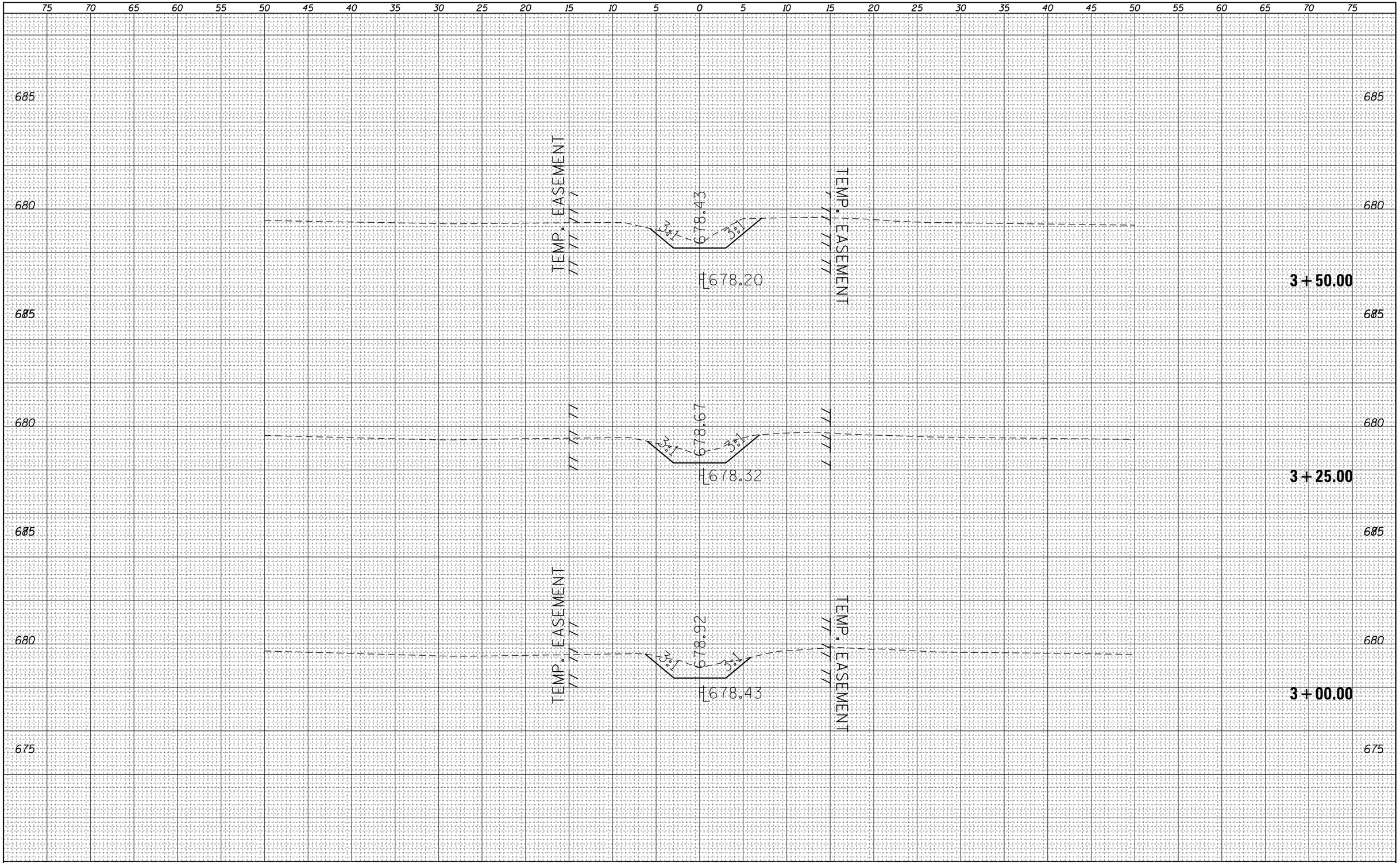

FILE NAME =	USER NAME = steffenmk	DESIGNED -	REVISED -
c:\pw_work\pwidot\steffenmk\d0158776\D774423-xsc-sht-GradeDitch.dgn		DRAWN -	REVISED -
	PLOT SCALE = 10.0000 ' / in.	CHECKED -	REVISED -
Default	PLOT DATE = 5/7/2014	DATE -	REVISED -

STATE OF ILLINOIS
DEPARTMENT OF TRANSPORTATION

CROSS SECTIONS
DITCH GRADING

SCALE: 5 | SHEET 5 OF 7 SHEETS | STA. 3+00.00 | TO STA. 3+50.00

F.A.P. RTE.	SECTION	COUNTY	TOTAL SHEETS	SHEET NO.
91	5N	Coles	271	244

CONTRACT NO. 74423

ILLINOIS FED. AID PROJECT

FINAL SURVEY	
NOTE BOOK	
NO.	

	BY	DATE
SURVEYED		
PLOTTED		
TEMPLATE		
AREAS		
AREAS CHECKED		

ORIGINAL SURVEY	
NOTE BOOK	
NO.	

	BY	DATE
SURVEYED		
PLOTTED		
TEMPLATE		
AREAS		
AREAS CHECKED		

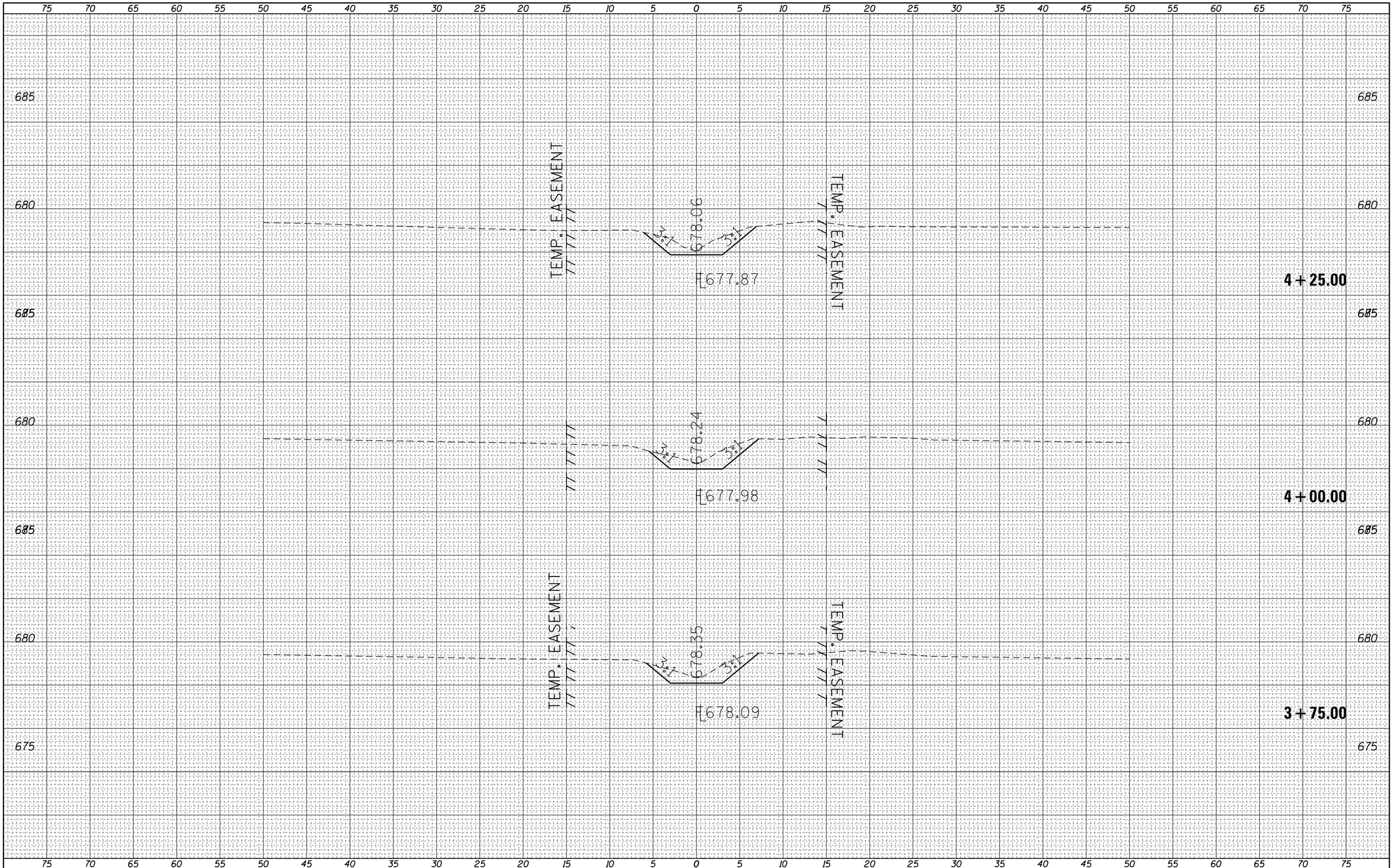

FILE NAME = c:\pw_work\pwidot\steffenmk\d0158776\D774423-sht-GradeDitch.dgn	USER NAME = steffenmk	DESIGNED -	REVISED -
	PLOT SCALE = 10.0000 ' / in.	DRAWN -	REVISED -
Default	PLOT DATE = 5/7/2014	CHECKED -	REVISED -
		DATE -	REVISED -

STATE OF ILLINOIS
DEPARTMENT OF TRANSPORTATION

CROSS SECTIONS
DITCH GRADING

SCALE: 5 | SHEET 6 OF 7 SHEETS | STA. 3+75.00 | TO STA. 4+25.00

F.A.P. RTE.	SECTION	COUNTY	TOTAL SHEETS	SHEET NO.
91	5N	Coles	271	245
		CONTRACT NO. 74423		
	ILLINOIS FED. AID PROJECT			

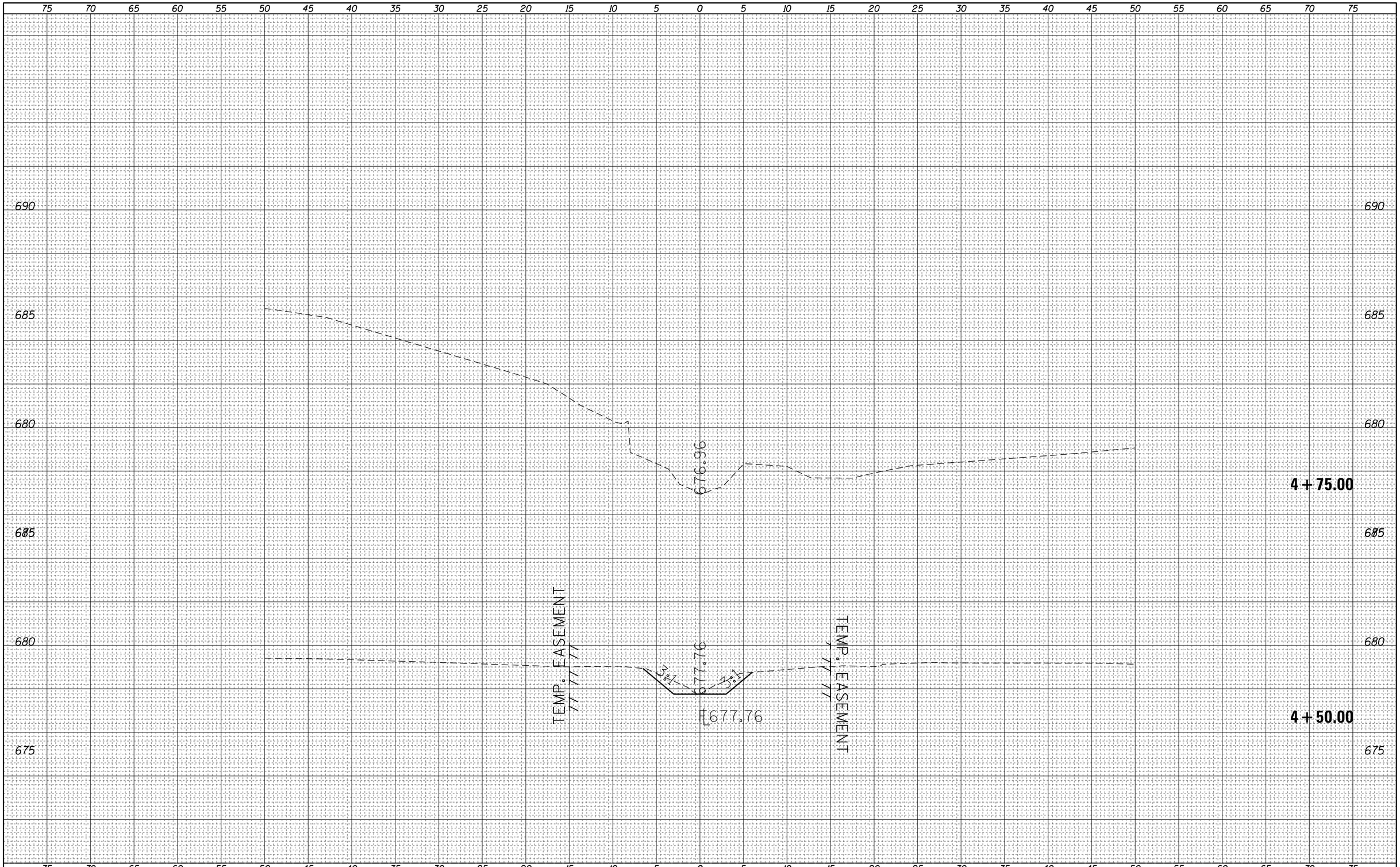

FINAL SURVEY		BY	DATE
NOTE BOOK	SURVEYED		
	PLOTTED		
	TEMPLATE		
	AREAS		
NO.	AREAS CHECKED		

ORIGINAL SURVEY		BY	DATE
NOTE BOOK	SURVEYED		
	PLOTTED		
	TEMPLATE		
	AREAS		
NO.	AREAS CHECKED		

FILE NAME = c:\pw_work\pwidot\steffenmk\d0158776\D774423-xsc-sht-GradeDitch.dgn	USER NAME = steffenmk	DESIGNED -	REVISED -
		DRAWN -	REVISED -
	PLOT SCALE = 10.0000 ' / in.	CHECKED -	REVISED -
Default	PLOT DATE = 5/7/2014	DATE -	REVISED -

STATE OF ILLINOIS
DEPARTMENT OF TRANSPORTATION

CROSS SECTIONS
DITCH GRADING

SCALE: 5 | SHEET 7 OF 7 SHEETS | STA. 4+50.00 TO STA. 4+75.00

F.A.P. RTE.	SECTION	COUNTY	TOTAL SHEETS	SHEET NO.
91	5N	Coles	271	246

CONTRACT NO. 74423

ILLINOIS FED. AID PROJECT

FINAL SURVEY	NOTE BOOK	NO.
SURVEYED		
PLOTTED		
TEMPLATE		
AREAS		
AREAS CHECKED		

BY	DATE

ORIGINAL SURVEY	NOTE BOOK	NO.
SURVEYED		
PLOTTED		
TEMPLATE		
AREAS		
AREAS CHECKED		

BY	DATE

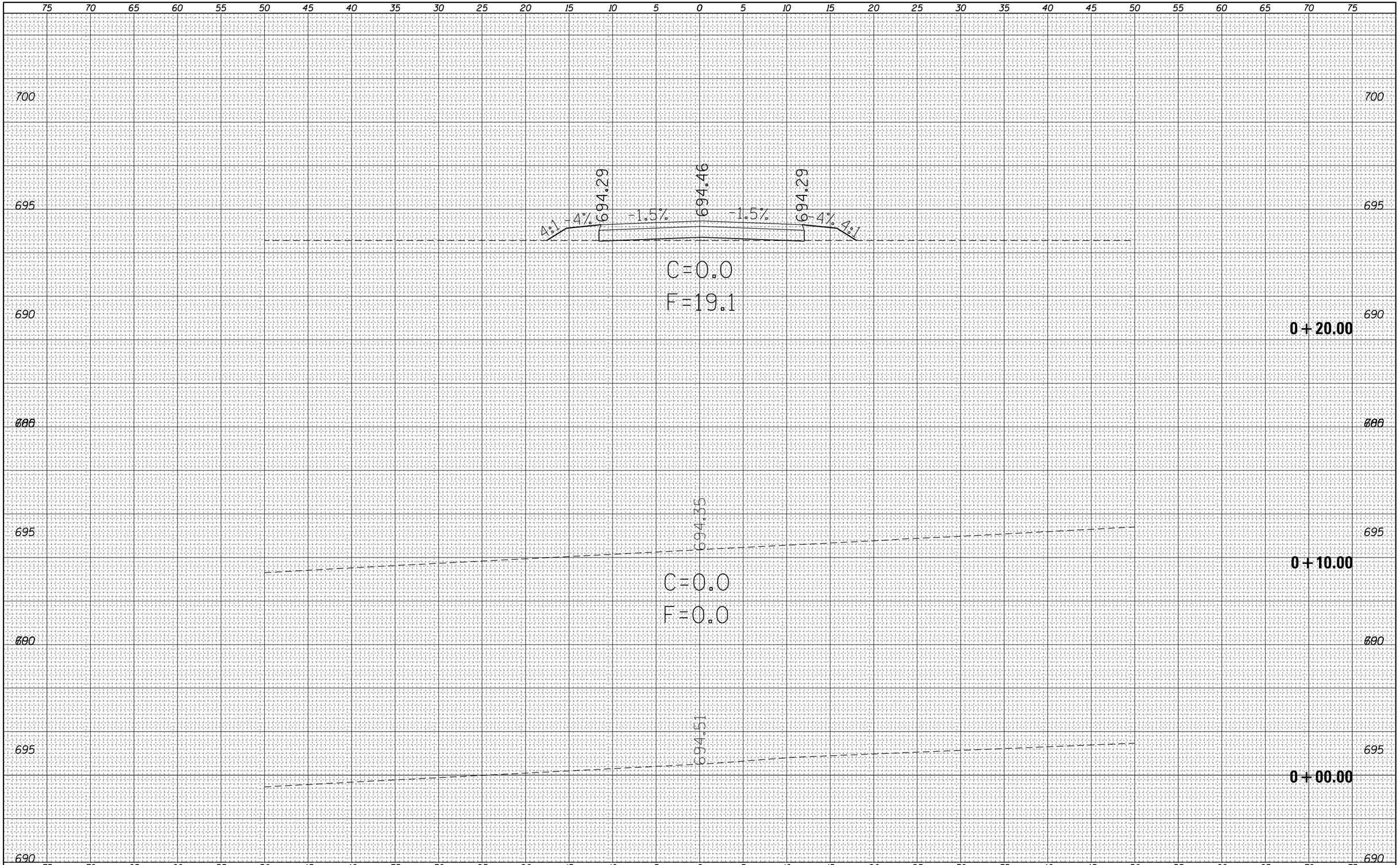

FILE NAME = c:\pw_work\pwidot\steffenmk\d0158776\D774423-sht-PE1.dgn	USER NAME = steffenmk	DESIGNED -	REVISED -
		DRAWN -	REVISED -
Default	PLOT SCALE = 10.0000 ' / in.	CHECKED -	REVISED -
	PLOT DATE = 5/7/2014	DATE -	REVISED -

STATE OF ILLINOIS
DEPARTMENT OF TRANSPORTATION

CROSS SECTIONS
P.E. #1

SCALE: 5 | SHEET 1 OF 3 SHEETS | STA. 0+00.00 | TO STA. 0+20.00

F.A.P. RTE.	SECTION	COUNTY	TOTAL SHEETS	SHEET NO.
91	5N	Coles	271	247

CONTRACT NO. 74423

ILLINOIS | FED. AID PROJECT

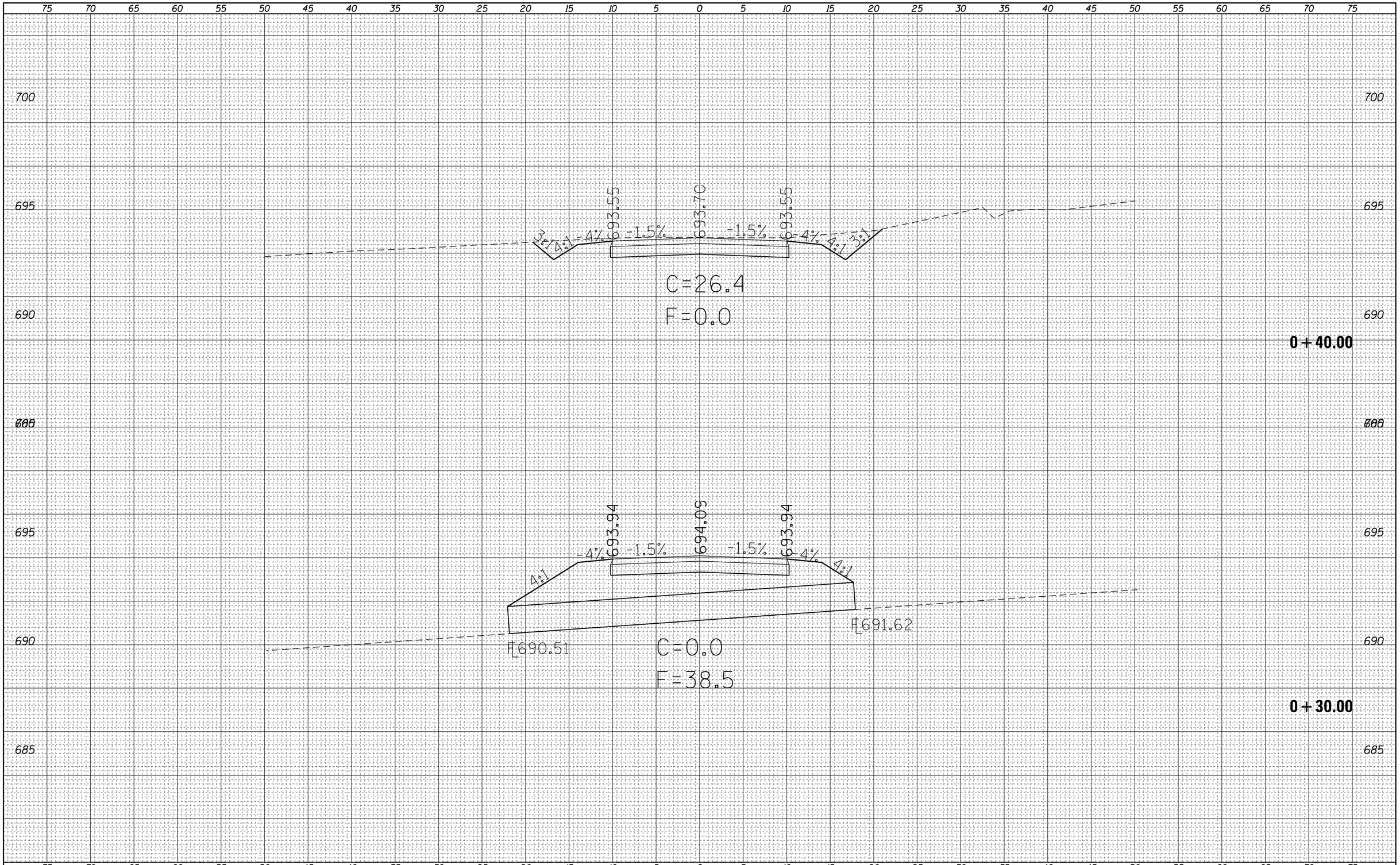

FINAL SURVEY	NOTE BOOK	
	SURVEYED	
	PLOTTED	
	TEMPLATE	
	AREAS	
NO.	AREAS CHECKED	BY

DATE

ORIGINAL SURVEY	NOTE BOOK	
	SURVEYED	
	PLOTTED	
	TEMPLATE	
	AREAS	
NO.	AREAS CHECKED	BY

DATE

FILE NAME =	USER NAME = steffenmk	DESIGNED -	REVISED -
c:\pw_work\pwidot\steffenmk\d0158776\D774423-sht-PE1.dgn		DRAWN -	REVISED -
Default	PLOT SCALE = 10.0000 ' / in.	CHECKED -	REVISED -
	PLOT DATE = 5/7/2014	DATE -	REVISED -

STATE OF ILLINOIS
DEPARTMENT OF TRANSPORTATION

CROSS SECTIONS
P.E. #1

SCALE: 5 | SHEET 2 OF 3 SHEETS | STA. 0+30.00 | TO STA. 0+40.00

F.A.P. RTE.	SECTION	COUNTY	TOTAL SHEETS	SHEET NO.
91	5N	Coles	271	248

CONTRACT NO. 74423

ILLINOIS | FED. AID PROJECT

FINAL SURVEY	NOTE BOOK	NO.

	BY	DATE
SURVEYED		
PLOTTED		
TEMPLATE		
AREAS		
AREAS CHECKED		

ORIGINAL SURVEY	NOTE BOOK	NO.

	BY	DATE
SURVEYED		
PLOTTED		
TEMPLATE		
AREAS		
AREAS CHECKED		

75 70 65 60 55 50 45 40 35 30 25 20 15 10 5 0 5 10 15 20 25 30 35 40 45 50 55 60 65 70 75

700

695

690

693.79

C=0.0

F=0.0

0+50.00

FILE NAME = c:\pw_work\pwidot\steffenmk\d0158776\D774423-xsc-sht-PE1.dgn	USER NAME = steffenmk	DESIGNED -	REVISED -
		DRAWN -	REVISED -
	PLOT SCALE = 10.0000 ' / in.	CHECKED -	REVISED -
Default	PLOT DATE = 5/7/2014	DATE -	REVISED -

STATE OF ILLINOIS
DEPARTMENT OF TRANSPORTATION

CROSS SECTIONS
P.E. #1

SCALE: 5 | SHEET 3 OF 3 SHEETS | STA. 0+50.00 | TO STA. 0+50.00

F.A.P. RTE.	SECTION	COUNTY	TOTAL SHEETS	SHEET NO.
91	5N	Coles	271	249

CONTRACT NO. 74423

ILLINOIS FED. AID PROJECT

FINAL SURVEY	NOTE BOOK	NO.
	SURVEYED	
	PLOTTED	
	TEMPLATE	
	AREAS	
	AREAS CHECKED	

BY	DATE

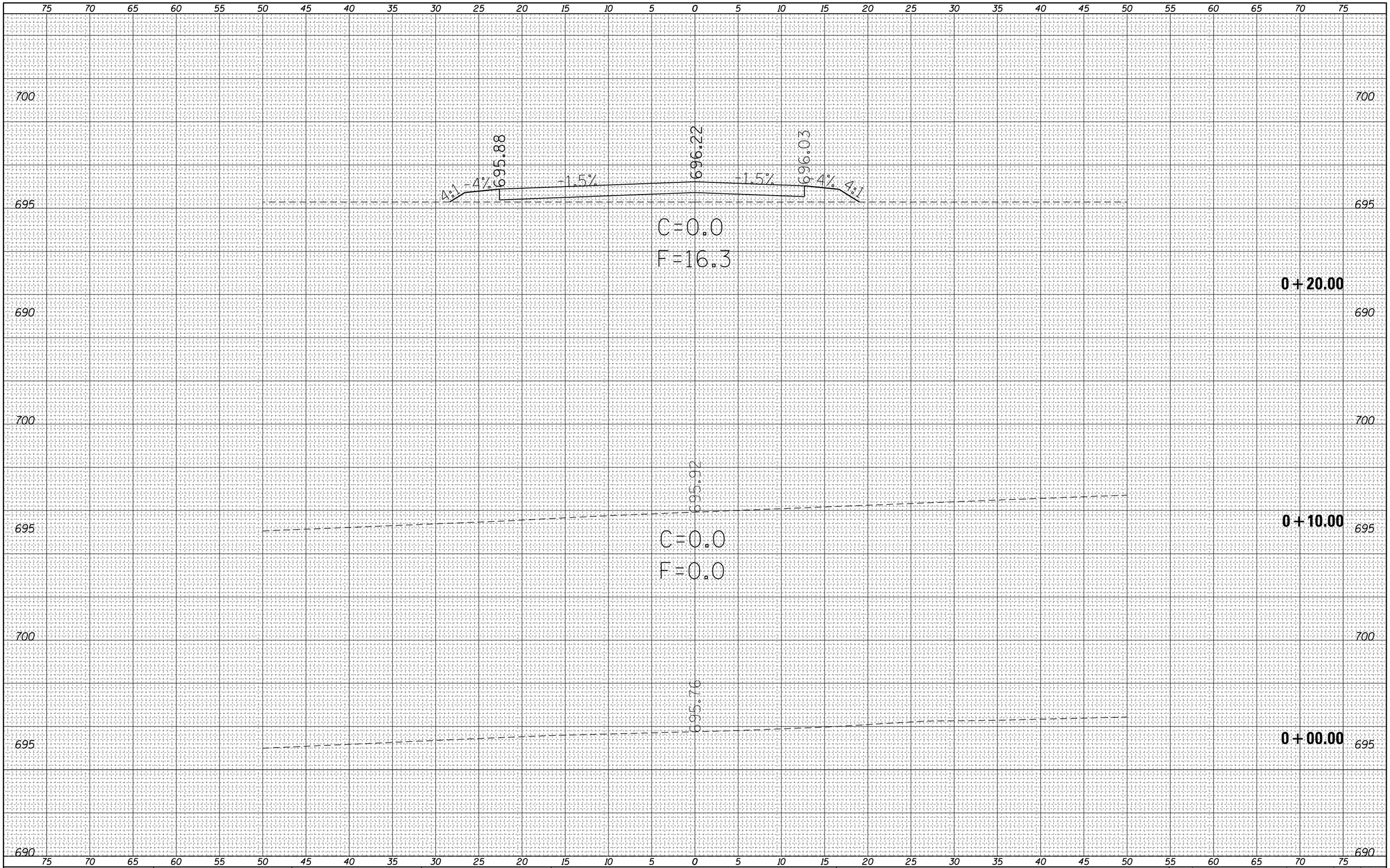

ORIGINAL SURVEY	NOTE BOOK	NO.
	SURVEYED	
	PLOTTED	
	TEMPLATE	
	AREAS	
	AREAS CHECKED	

BY	DATE

FILE NAME = c:\pw_work\pwidot\steffenmk\d0158776\D774423-xsc-sht-FE1.dgn	USER NAME = steffenmk	DESIGNED -	REVISED -
	PLOT SCALE = 10.0000 ' / in.	DRAWN -	REVISED -
Default	PLOT DATE = 5/7/2014	CHECKED -	REVISED -
		DATE -	REVISED -

STATE OF ILLINOIS
DEPARTMENT OF TRANSPORTATION

CROSS SECTIONS
F.E. #1

SCALE: 5 | SHEET 1 OF 2 SHEETS | STA. 0+00.00 | TO STA. 0+20.00

F.A.P. RTE.	SECTION	COUNTY	TOTAL SHEETS	SHEET NO.
91	5N	Coles	271	250

CONTRACT NO. 74423

ILLINOIS FED. AID PROJECT

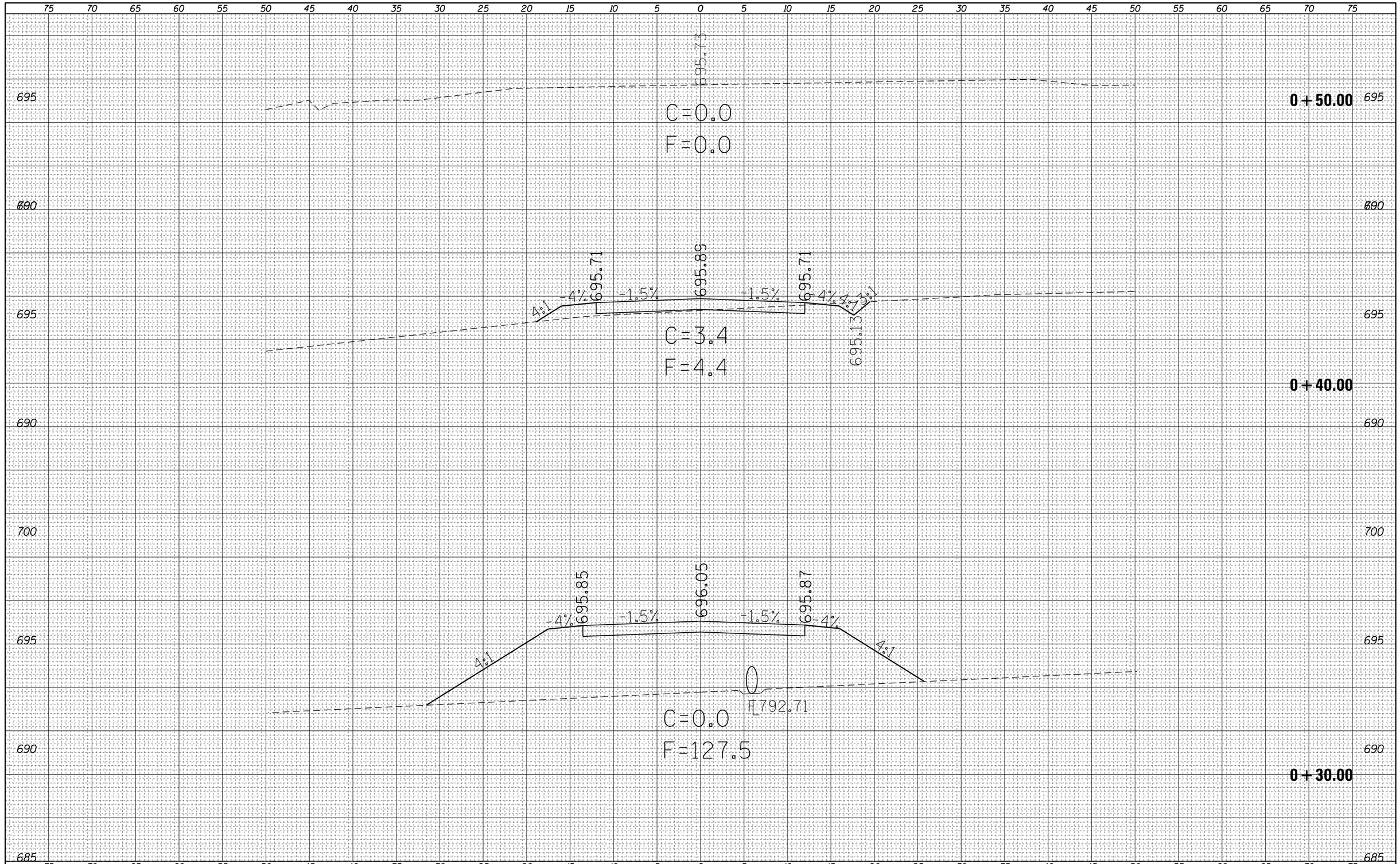

FINAL SURVEY — NOTE BOOK — NO.
SURVEYED — PLOTTED — TEMPLATE — AREAS — AREAS CHECKED
BY — DATE

ORIGINAL SURVEY — NOTE BOOK — NO.
SURVEYED — PLOTTED — TEMPLATE — AREAS — AREAS CHECKED
BY — DATE

FILE NAME =	USER NAME = steffenmk	DESIGNED -	REVISED -
c:\pw_work\pwidot\steffenmk\d0158776\D774423-xsc-sht-FE1.dgn		DRAWN -	REVISED -
	PLOT SCALE = 10.0000 ' / in.	CHECKED -	REVISED -
Default	PLOT DATE = 5/7/2014	DATE -	REVISED -

STATE OF ILLINOIS
DEPARTMENT OF TRANSPORTATION

CROSS SECTIONS
F.E. #1

SCALE: 5 | SHEET 2 OF 2 SHEETS | STA. 0+30.00 | TO STA. 0+50.00

F.A.P. RTE.	SECTION	COUNTY	TOTAL SHEETS	SHEET NO.
91	5N	Coles	271	251

CONTRACT NO. 74423
ILLINOIS FED. AID PROJECT

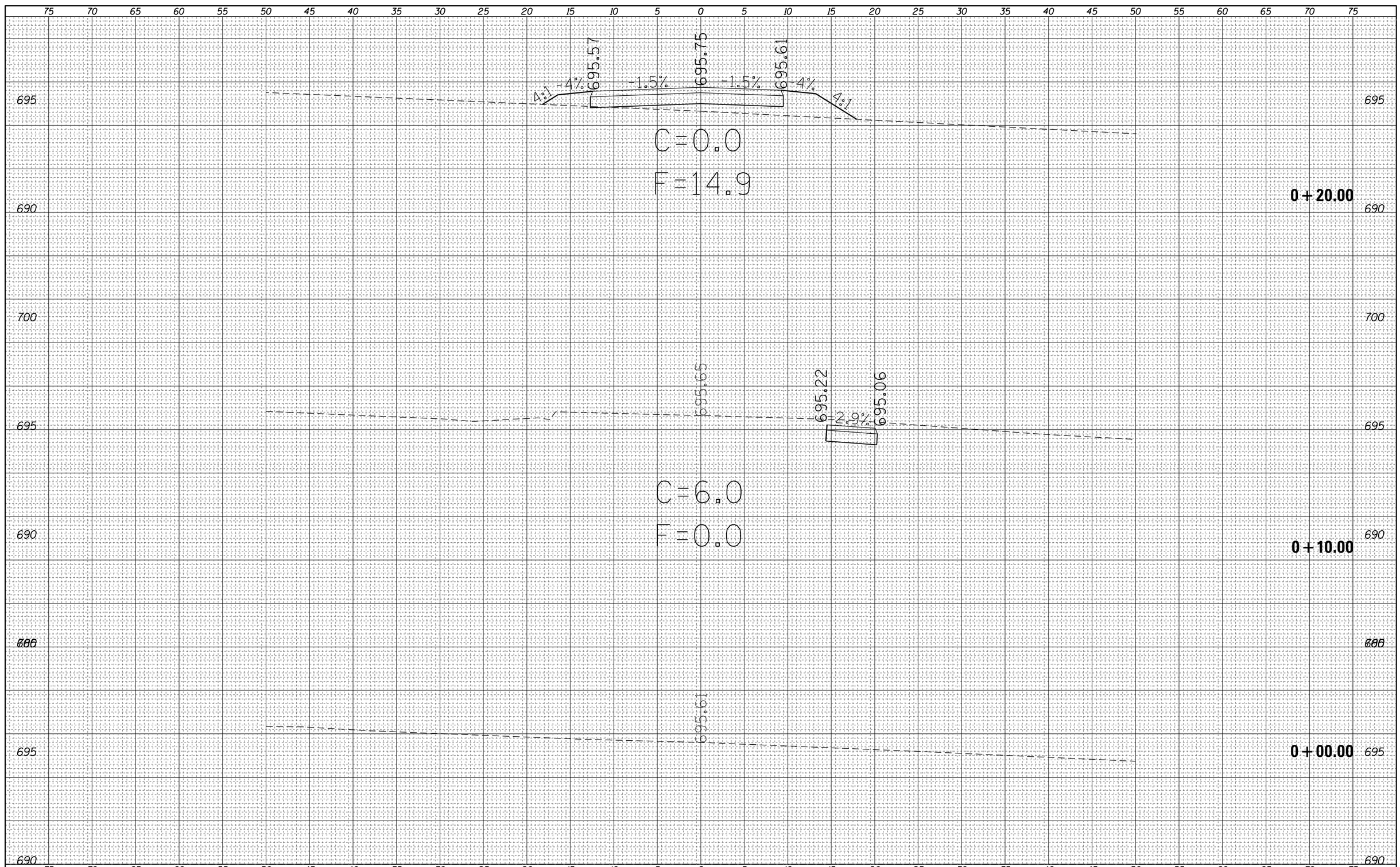

FINAL SURVEY	
NOTE BOOK	
NO.	

SURVEYED	
PLOTTED	
TEMPLATE	
AREAS	
AREAS CHECKED	

BY	DATE

ORIGINAL SURVEY	
NOTE BOOK	
NO.	

SURVEYED	
PLOTTED	
TEMPLATE	
AREAS	
AREAS CHECKED	

BY	DATE

FILE NAME =	USER NAME = steffenmk	DESIGNED -	REVISED -
c:\pw_work\pwidot\steffenmk\d0158776\D774423-xsc-sht-PE2.dgn		DRAWN -	REVISED -
	PLOT SCALE = 10.0000 ' / in.	CHECKED -	REVISED -
Default	PLOT DATE = 5/7/2014	DATE -	REVISED -

STATE OF ILLINOIS
DEPARTMENT OF TRANSPORTATION

CROSS SECTIONS
P.E. #2

SCALE: 5 | SHEET 1 OF 3 SHEETS | STA. 0+00.00 | TO STA. 0+20.00

F.A.P. RTE.	SECTION	COUNTY	TOTAL SHEETS	SHEET NO.
91	5N	Coles	271	252

CONTRACT NO. 74423

ILLINOIS | FED. AID PROJECT

FINAL SURVEY	NOTE BOOK	NO.
SURVEYED	BY	DATE
PLOTTED		
TEMPLATE		
AREAS		
AREAS CHECKED		

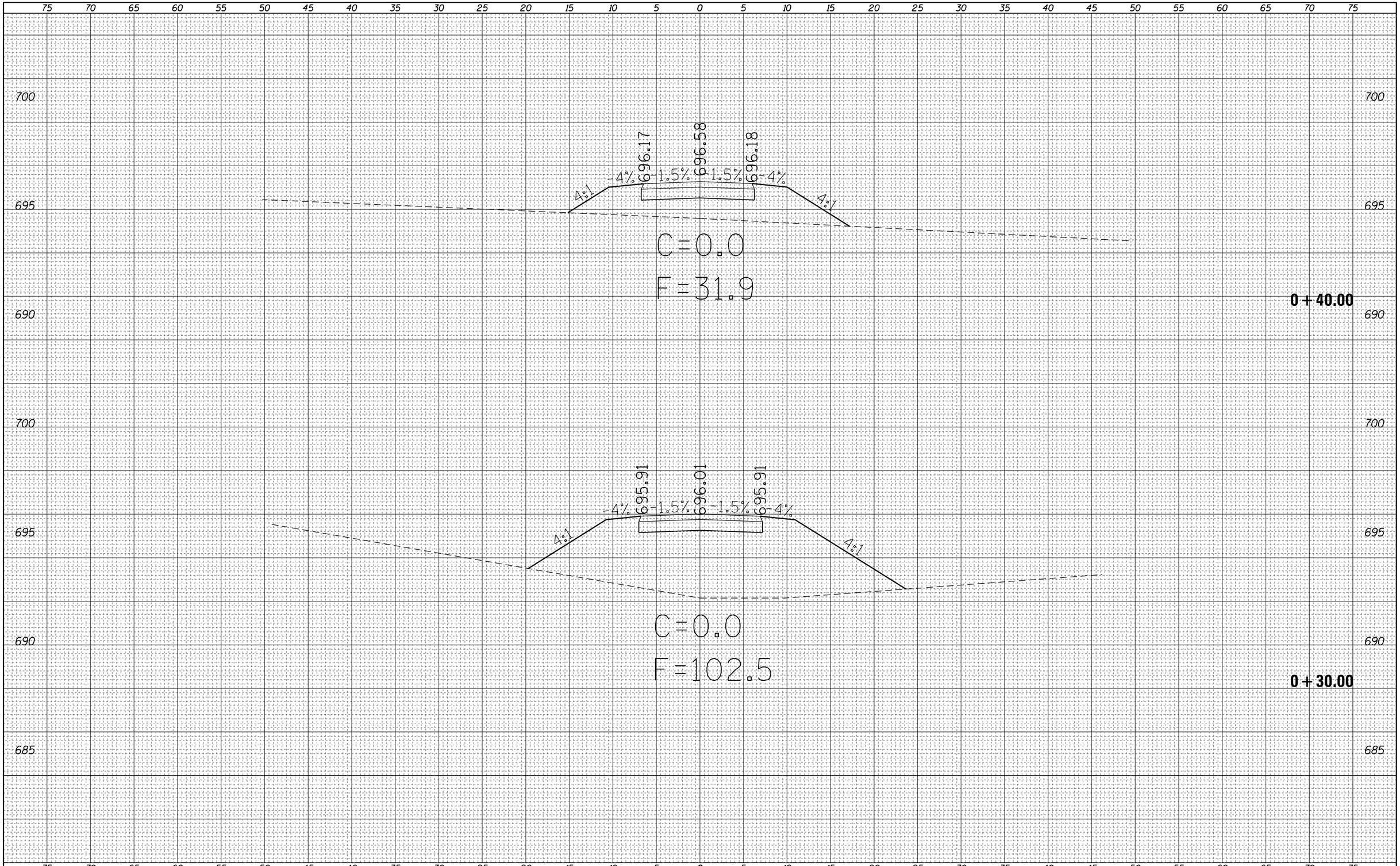

ORIGINAL SURVEY	NOTE BOOK	NO.
SURVEYED	BY	DATE
PLOTTED		
TEMPLATE		
AREAS		
AREAS CHECKED		

FILE NAME = c:\pw_work\pwidot\steffenmk\d0158776\D774423-xsc-sht-PE2.dgn	USER NAME = steffenmk	DESIGNED -	REVISED -
		DRAWN -	REVISED -
	PLOT SCALE = 10.0000 ' / in.	CHECKED -	REVISED -
Default	PLOT DATE = 5/7/2014	DATE -	REVISED -

STATE OF ILLINOIS
DEPARTMENT OF TRANSPORTATION

CROSS SECTIONS
P.E. #2

SCALE: 5 | SHEET 2 OF 3 SHEETS | STA. 0+30.00 | TO STA. 0+40.00

F.A.P. RTE.	SECTION	COUNTY	TOTAL SHEETS	SHEET NO.
91	5N	Coles	271	253
		CONTRACT NO. 74423		
		ILLINOIS FED. AID PROJECT		

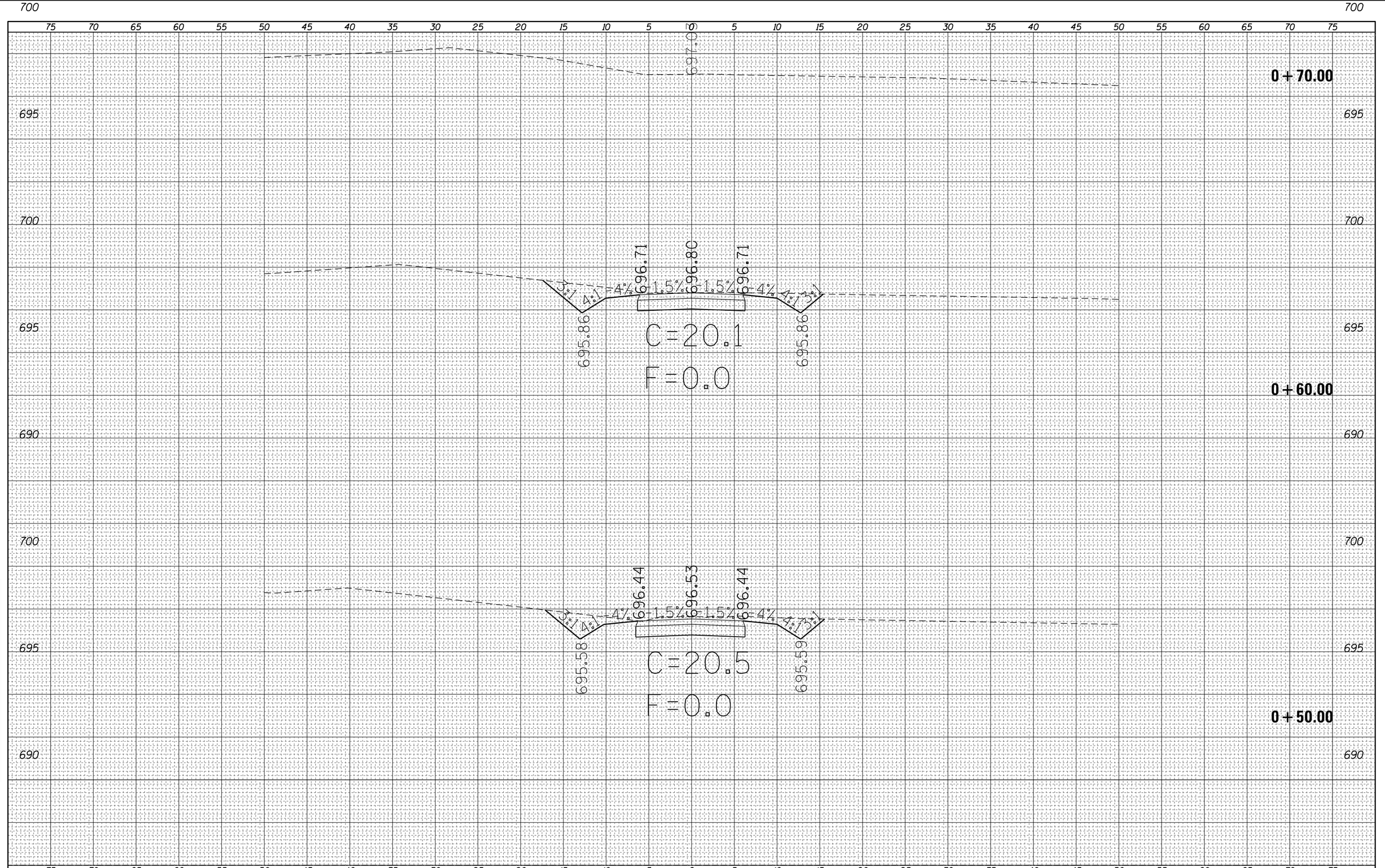

FINAL SURVEY

NOTE BOOK

NO.

SURVEYED

PLOTTED

TEMPLATE

AREAS

AREAS CHECKED

BY

DATE

ORIGINAL SURVEY

NOTE BOOK

NO.

SURVEYED

PLOTTED

TEMPLATE

AREAS

AREAS CHECKED

BY

DATE

FILE NAME =	USER NAME = steffenmk	DESIGNED -	REVISED -
c:\pw_work\pwidot\steffenmk\d0158776\D774423-xsc-sht-PE2.dgn		DRAWN -	REVISED -
Default	PLOT SCALE = 10.0000 ' / in.	CHECKED -	REVISED -
	PLOT DATE = 5/7/2014	DATE -	REVISED -

STATE OF ILLINOIS
DEPARTMENT OF TRANSPORTATION

CROSS SECTIONS
P.E. #2

SCALE: 5 | SHEET 3 OF 3 SHEETS | STA. 0+50.00 | TO STA. 0+70.00

F.A.P. RTE.	SECTION	COUNTY	TOTAL SHEETS	SHEET NO.
91	5N	Coles	271	254

CONTRACT NO. 74423

ILLINOIS FED. AID PROJECT

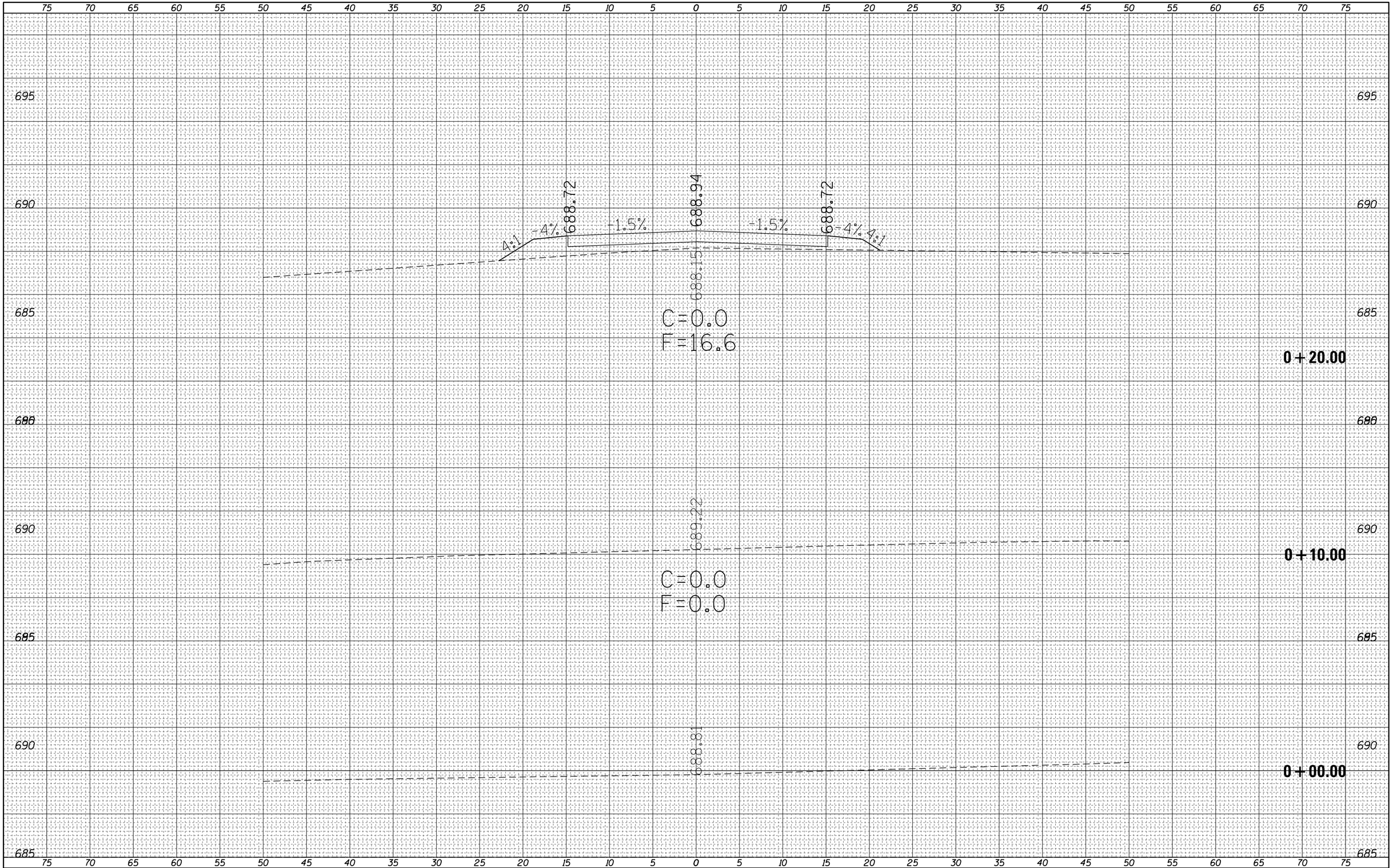

FINAL SURVEY	BY	DATE
SURVEYED		
PLOTTED		
TEMPLATE		
NOTE BOOK		
AREAS		
NO.	AREAS CHECKED	

ORIGINAL SURVEY	BY	DATE
SURVEYED		
PLOTTED		
TEMPLATE		
NOTE BOOK		
AREAS		
NO.	AREAS CHECKED	

FILE NAME =	USER NAME = steffenmk	DESIGNED -	REVISED -
c:\pw_work\pwidot\steffenmk\d0158776\D774423-sht-FE2.dgn		DRAWN -	REVISED -
	PLOT SCALE = 10.0000 ' / in.	CHECKED -	REVISED -
Default	PLOT DATE = 5/7/2014	DATE -	REVISED -

STATE OF ILLINOIS
DEPARTMENT OF TRANSPORTATION

CROSS SECTIONS
F.E. #2

SCALE: 5 | SHEET 1 OF 3 SHEETS | STA. 0+00.00 | TO STA. 0+20.00

F.A.P. RTE.	SECTION	COUNTY	TOTAL SHEETS	SHEET NO.
91	5N	Coles	271	255

CONTRACT NO. 74423

ILLINOIS | FED. AID PROJECT

FINAL SURVEY	NOTE BOOK	NO.
SURVEYED	BY	
PLOTTED		
TEMPLATE		
AREAS		
AREAS CHECKED	DATE	

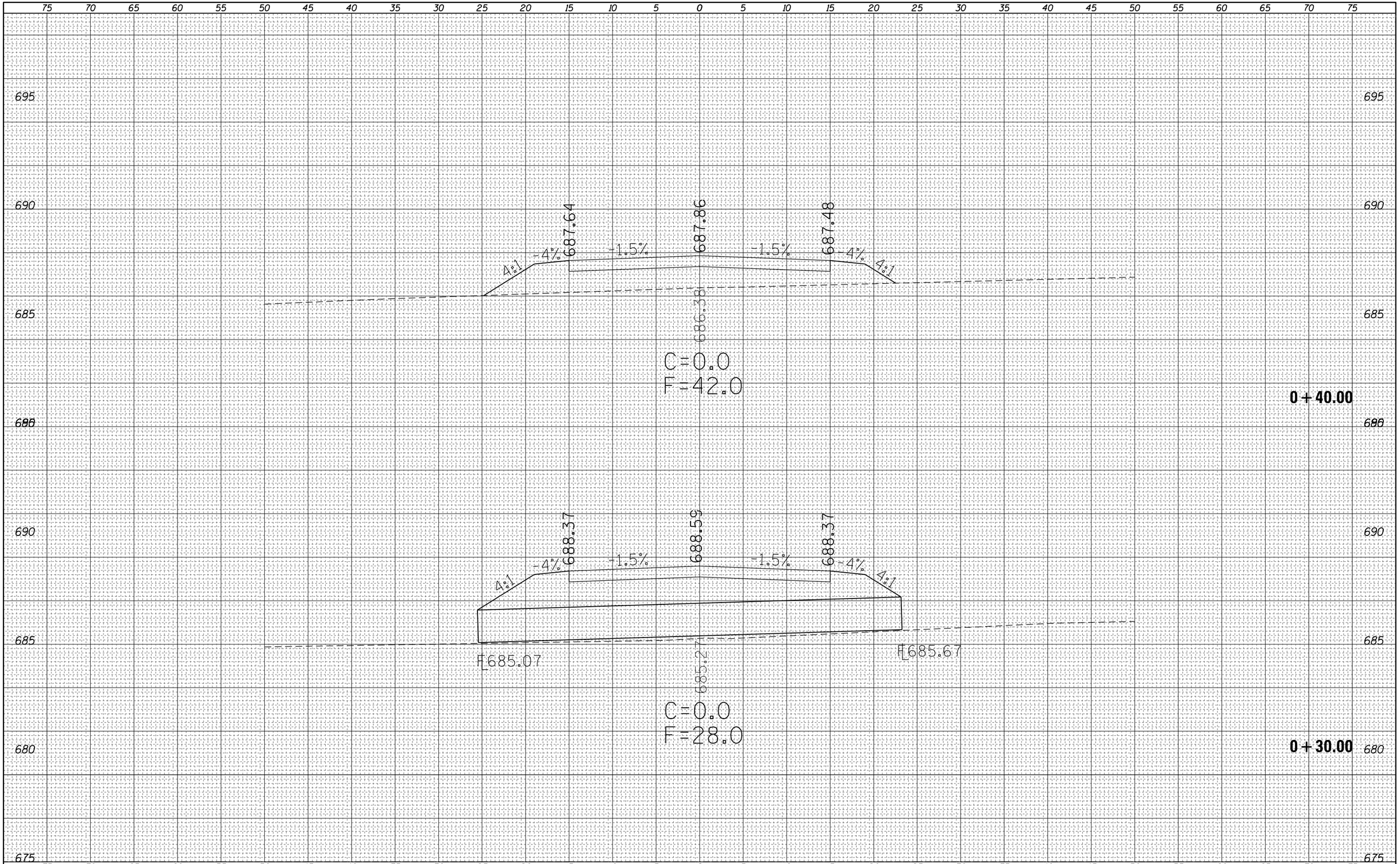

ORIGINAL SURVEY	NOTE BOOK	NO.
SURVEYED	BY	
PLOTTED		
TEMPLATE		
AREAS		
AREAS CHECKED	DATE	

FILE NAME =	USER NAME = steffenmk	DESIGNED -	REVISED -
c:\pw_work\pwidot\steffenmk\d0158776\D774423-xsc-sht-FE2.dgn		DRAWN -	REVISED -
	PLOT SCALE = 10.0000 ' / in.	CHECKED -	REVISED -
Default	PLOT DATE = 5/7/2014	DATE -	REVISED -

STATE OF ILLINOIS
DEPARTMENT OF TRANSPORTATION

CROSS SECTIONS
F.E. #2

SCALE: 5 | SHEET 2 OF 3 SHEETS | STA. 0+30.00 | TO STA. 0+40.00

F.A.P. RTE.	SECTION	COUNTY	TOTAL SHEETS	SHEET NO.
91	5N	Coles	271	256

CONTRACT NO. 74423

ILLINOIS | FED. AID PROJECT

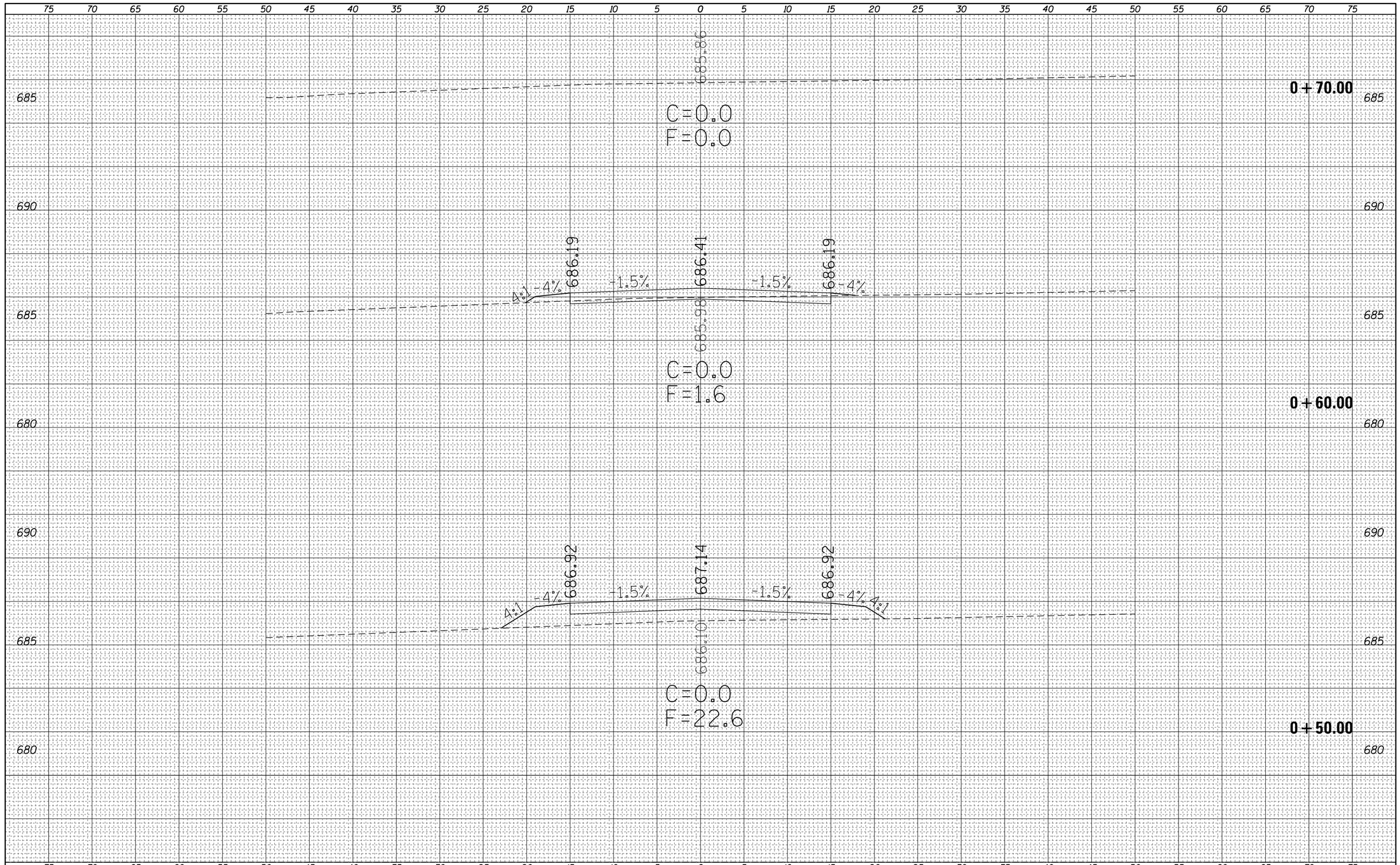

FINAL SURVEY	NOTE BOOK	NO.
SURVEYED		
PLOTTED		
TEMPLATE		
AREAS		
AREAS CHECKED		

ORIGINAL SURVEY	NOTE BOOK	NO.
SURVEYED		
PLOTTED		
TEMPLATE		
AREAS		
AREAS CHECKED		

BY	DATE

FILE NAME =	USER NAME = steffenmk	DESIGNED -	REVISED -
c:\pw_work\pwidot\steffenmk\d0158776\D774423-sht-FE2.dgn		DRAWN -	REVISED -
Default	PLOT SCALE = 10.0000 ' / in.	CHECKED -	REVISED -
	PLOT DATE = 5/7/2014	DATE -	REVISED -

STATE OF ILLINOIS
DEPARTMENT OF TRANSPORTATION

CROSS SECTIONS
F.E. #2

SCALE: 5 | SHEET 3 OF 3 SHEETS | STA. 0+50.00 | TO STA. 0+70.00

F.A.P. RTE.	SECTION	COUNTY	TOTAL SHEETS	SHEET NO.
91	5N	Coles	271	257

CONTRACT NO. 74423

ILLINOIS FED. AID PROJECT

FINAL SURVEY	NOTE BOOK	NO.
SURVEYED	BY	
PLOTTED		
TEMPLATE		
AREAS		
AREAS CHECKED		DATE

ORIGINAL SURVEY	NOTE BOOK	NO.
SURVEYED	BY	
PLOTTED		
TEMPLATE		
AREAS		
AREAS CHECKED		DATE

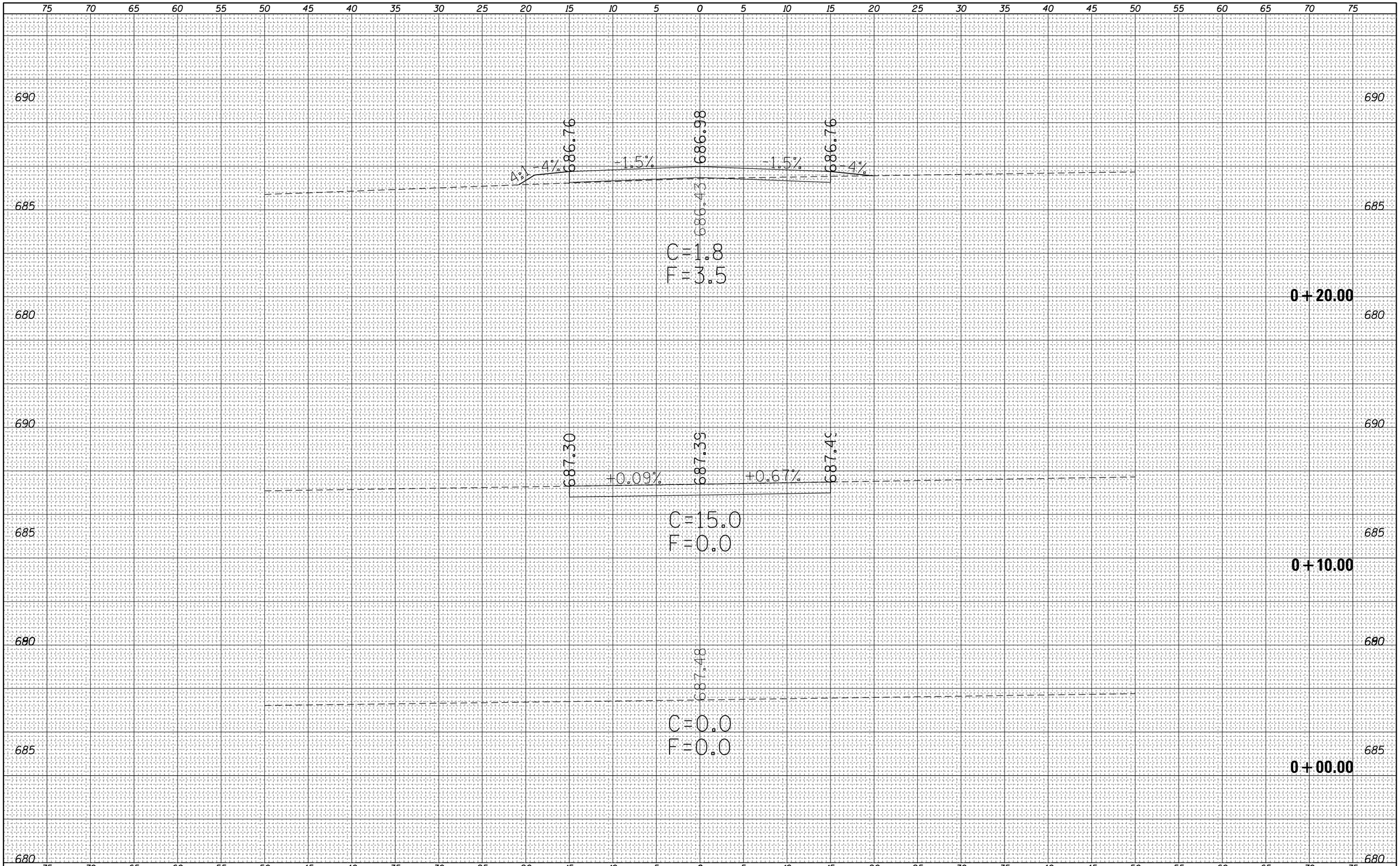

FILE NAME = c:\pw_work\pwidot\steffenmk\d0158776\D774423-xsc-sht-FE3.dgn	USER NAME = steffenmk	DESIGNED -	REVISED -	STATE OF ILLINOIS DEPARTMENT OF TRANSPORTATION	CROSS SECTIONS F.E. #3		
		DRAWN -	REVISED -				
Default	PLOT SCALE = 10.0000 ' / in.	CHECKED -	REVISED -		SCALE: 5	SHEET 1 OF 3 SHEETS	STA. 0+00.00 TO STA. 0+20.00
	PLOT DATE = 5/7/2014	DATE -	REVISED -				

F.A.P. RTE.	SECTION	COUNTY	TOTAL SHEETS	SHEET NO.
91	5N	Coles	271	258
		CONTRACT NO. 74423		
	ILLINOIS	FED. AID PROJECT		

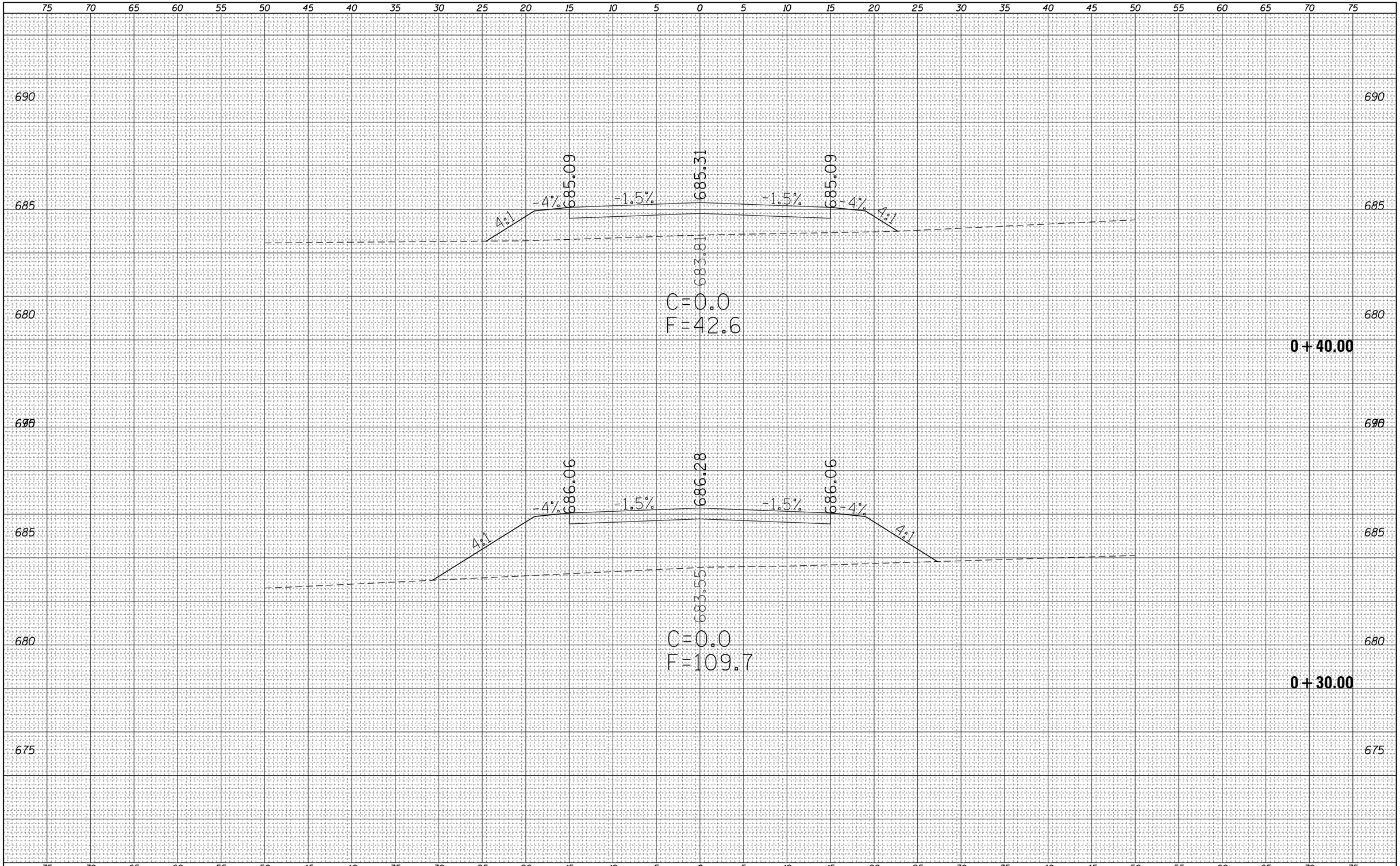

FINAL SURVEY

NO.	NOTE BOOK	SURVEYED	PLOTTED	TEMPLATE	AREAS	AREAS CHECKED	BY	DATE

ORIGINAL SURVEY

NO.	NOTE BOOK	SURVEYED	PLOTTED	TEMPLATE	AREAS	AREAS CHECKED	BY	DATE

FILE NAME = c:\pw_work\pwidot\steffenmk\d0158776\D774423-xsc-sht-FE3.dgn	USER NAME = steffenmk	DESIGNED -	REVISED -
		DRAWN -	REVISED -
	PLOT SCALE = 10.0000 ' / in.	CHECKED -	REVISED -
Default	PLOT DATE = 5/7/2014	DATE -	REVISED -

STATE OF ILLINOIS
DEPARTMENT OF TRANSPORTATION

CROSS SECTIONS
F.E. #3

SCALE: 5 | SHEET 2 OF 3 SHEETS | STA. 0+30.00 | TO STA. 0+40.00

F.A.P. RTE.	SECTION	COUNTY	TOTAL SHEETS	SHEET NO.
91	5N	Coles	271	259

CONTRACT NO. 74423

ILLINOIS FED. AID PROJECT

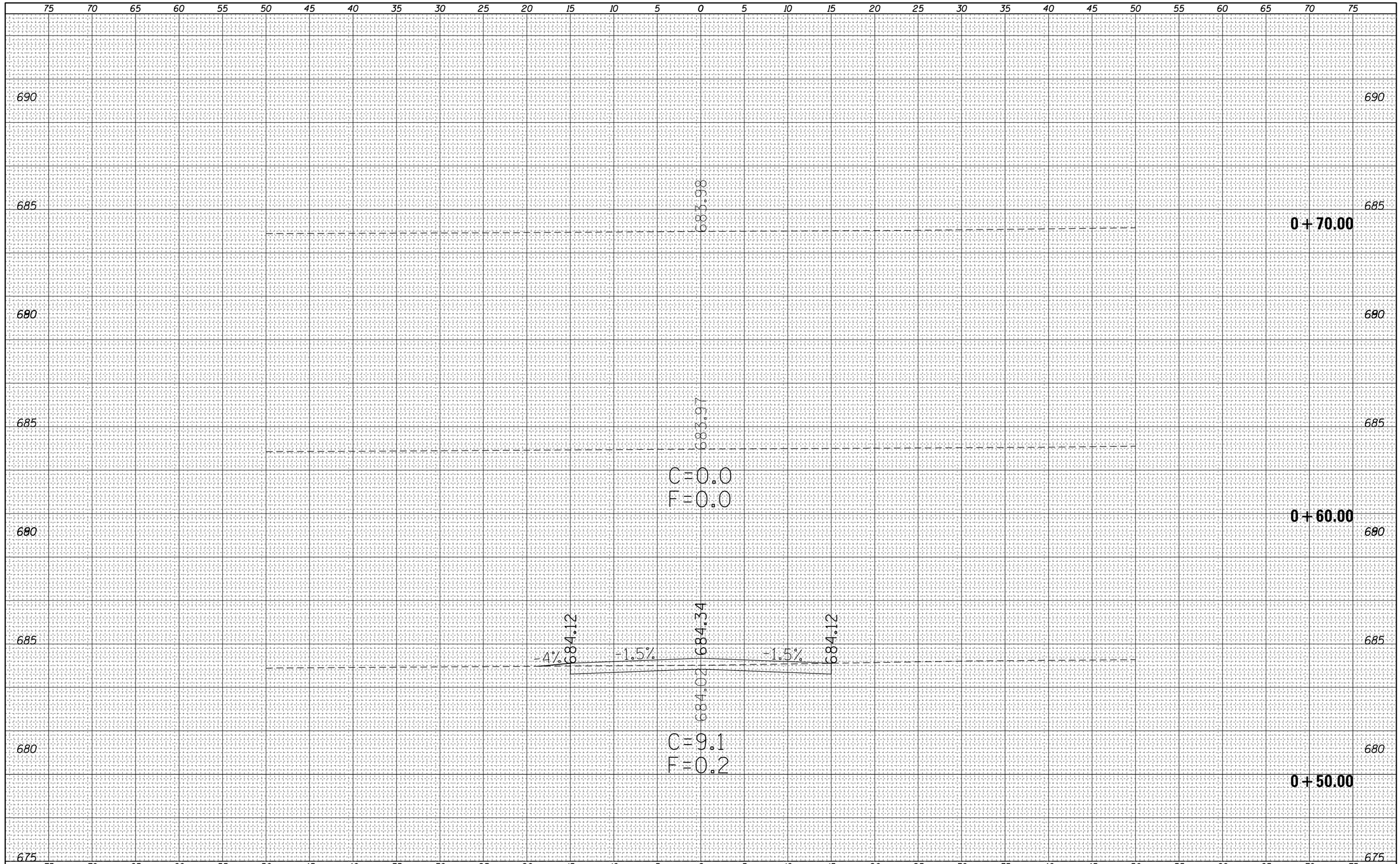

FINAL SURVEY	NOTE BOOK	NO.
SURVEYED		
PLOTTED		
TEMPLATE		
AREAS		
AREAS CHECKED		

ORIGINAL SURVEY	NOTE BOOK	NO.
SURVEYED		
PLOTTED		
TEMPLATE		
AREAS		
AREAS CHECKED		

BY	DATE

FILE NAME =	USER NAME = steffenmk	DESIGNED -	REVISED -
c:\pw_work\pwidot\steffenmk\d0158776\D774423-xsc-sht-FE3.dgn		DRAWN -	REVISED -
	PLOT SCALE = 10.0000 ' / in.	CHECKED -	REVISED -
Default	PLOT DATE = 5/7/2014	DATE -	REVISED -

STATE OF ILLINOIS
DEPARTMENT OF TRANSPORTATION

CROSS SECTIONS
F.E. #3

SCALE: 5 | SHEET 3 OF 3 SHEETS | STA. 0+50.00 | TO STA. 0+70.00

F.A.P. RTE.	SECTION	COUNTY	TOTAL SHEETS	SHEET NO.
91	5N	Coles	271	260

CONTRACT NO. 74423

ILLINOIS FED. AID PROJECT

FINAL SURVEY	NOTE BOOK	NO.
SURVEYED		
PLOTTED		
TEMPLATE		
AREAS		
AREAS CHECKED		

BY	DATE

ORIGINAL SURVEY	NOTE BOOK	NO.
SURVEYED		
PLOTTED		
TEMPLATE		
AREAS		
AREAS CHECKED		

BY	DATE

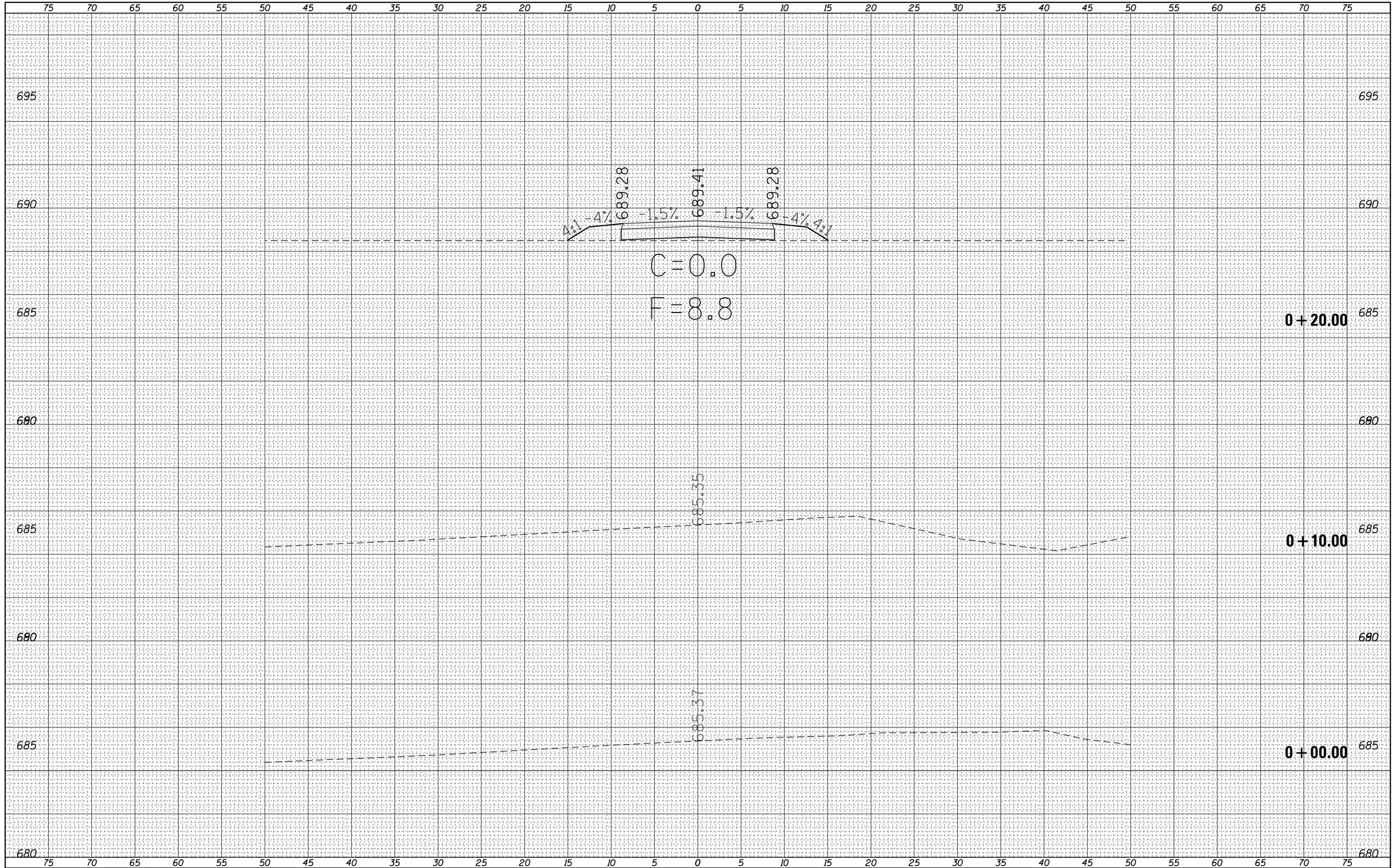

FILE NAME =	USER NAME = steffenmk	DESIGNED -	REVISED -
c:\pw_work\pwidot\steffenmk\d0158776\D774423-xsc-sht-PE3.dgn		DRAWN -	REVISED -
	PLOT SCALE = 10.0000 ' / in.	CHECKED -	REVISED -
Default	PLOT DATE = 5/7/2014	DATE -	REVISED -

STATE OF ILLINOIS
DEPARTMENT OF TRANSPORTATION

CROSS SECTIONS
P.E. #3

SCALE: 5 | SHEET 1 OF 5 SHEETS | STA. 0+00.00 | TO STA. 0+20.00

F.A.P. RTE.	SECTION	COUNTY	TOTAL SHEETS	SHEET NO.
91	5N	Coles	271	261

CONTRACT NO. 74423

ILLINOIS | FED. AID PROJECT

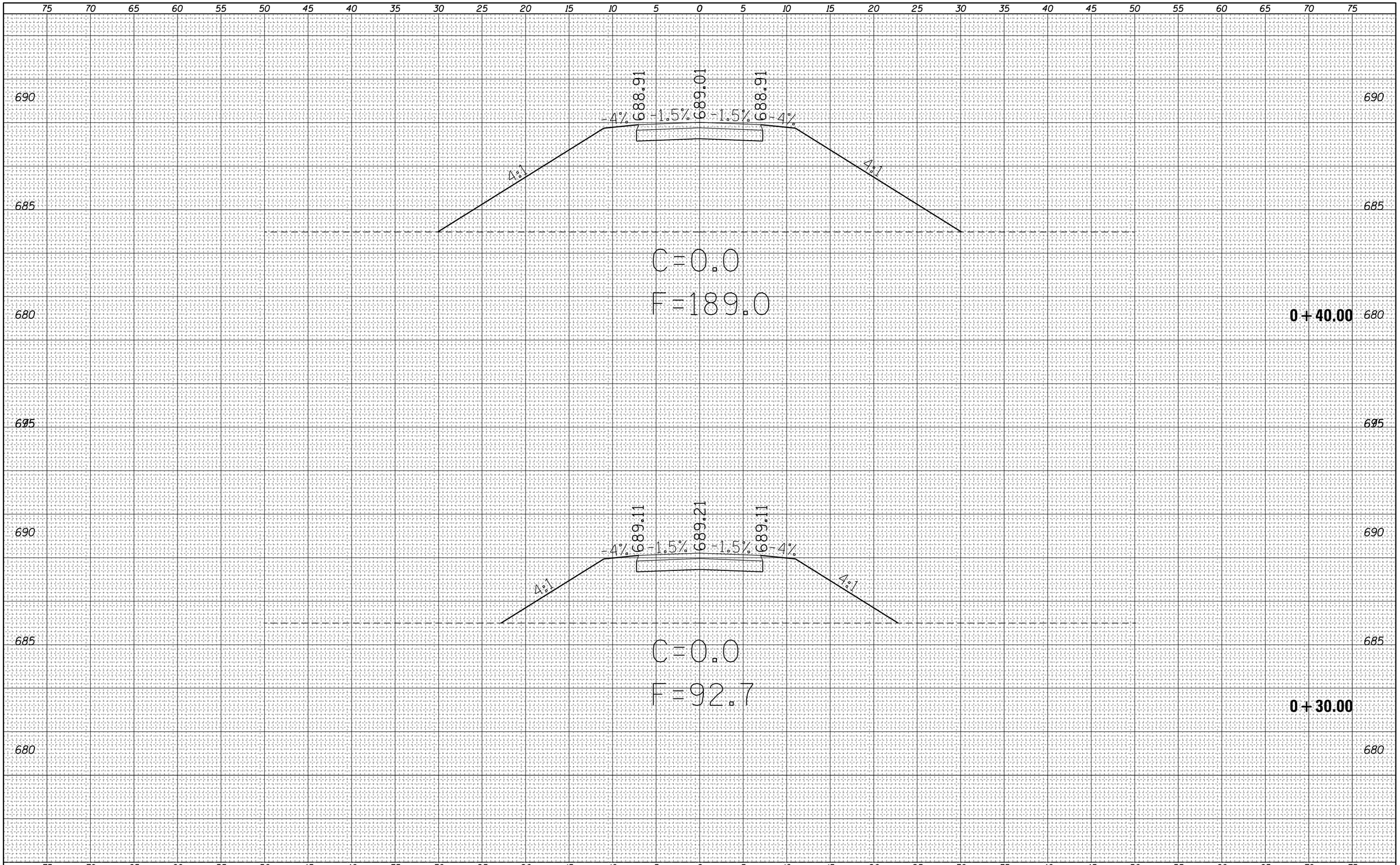

FINAL SURVEY	NOTE BOOK	NO.	BY	DATE
SURVEYED				
PLOTTED				
TEMPLATE				
AREAS				
AREAS CHECKED				

ORIGINAL SURVEY	NOTE BOOK	NO.	BY	DATE
SURVEYED				
PLOTTED				
TEMPLATE				
AREAS				
AREAS CHECKED				

FILE NAME =	USER NAME = steffenmk	DESIGNED -	REVISED -
c:\pw_work\pwidot\steffenmk\d0158776\D774423-xsc-sht-PE3.dgn		DRAWN -	REVISED -
	PLOT SCALE = 10.0000 ' / in.	CHECKED -	REVISED -
Default	PLOT DATE = 5/7/2014	DATE -	REVISED -

STATE OF ILLINOIS
DEPARTMENT OF TRANSPORTATION

CROSS SECTIONS
P.E. #3

SCALE: 5 | SHEET 2 OF 5 SHEETS | STA. 0+30.00 | TO STA. 0+40.00

F.A.P. RTE.	SECTION	COUNTY	TOTAL SHEETS	SHEET NO.
91	5N	Coles	271	262

CONTRACT NO. 74423

ILLINOIS | FED. AID PROJECT

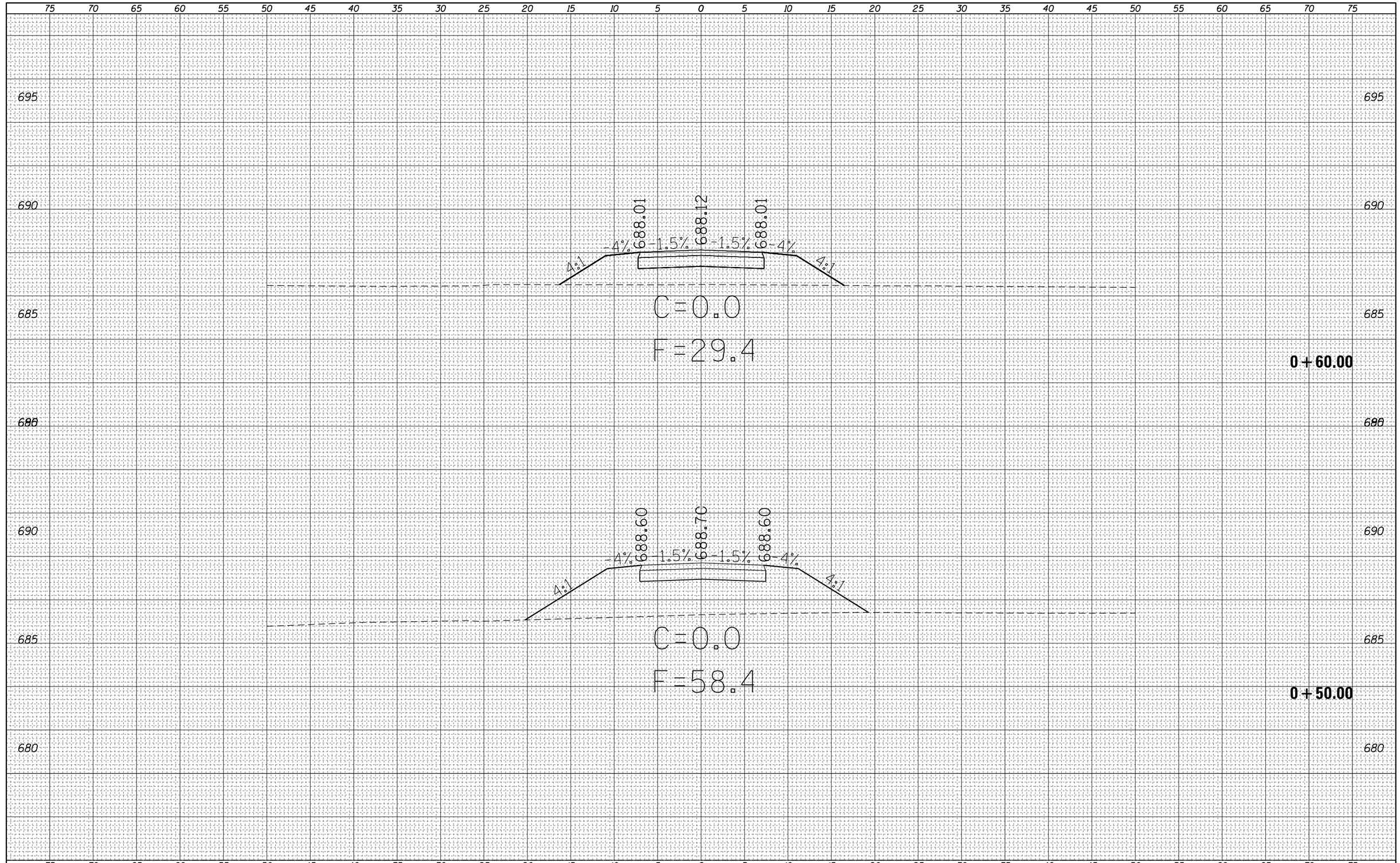

FINAL SURVEY		BY	DATE
NOTE BOOK	SURVEYED		
	PLOTTED		
	TEMPLATE		
	AREAS		
NO.	AREAS CHECKED		

ORIGINAL SURVEY		BY	DATE
NOTE BOOK	SURVEYED		
	PLOTTED		
	TEMPLATE		
	AREAS		
NO.	AREAS CHECKED		

FILE NAME = c:\pw_work\pwidot\steffenmk\d0158776\D774423-xsc-sht-PE3.dgn	USER NAME = steffenmk	DESIGNED -	REVISED -
		DRAWN -	REVISED -
	PLOT SCALE = 10.0000 ' / in.	CHECKED -	REVISED -
Default	PLOT DATE = 5/7/2014	DATE -	REVISED -

STATE OF ILLINOIS
DEPARTMENT OF TRANSPORTATION

CROSS SECTIONS
P.E. #3

SCALE: 5 | SHEET 3 OF 5 SHEETS | STA. 0+50.00 TO STA. 0+60.00

F.A.P. RTE.	SECTION	COUNTY	TOTAL SHEETS	SHEET NO.
91	5N	Coles	271	263

CONTRACT NO. 74423

ILLINOIS FED. AID PROJECT

FINAL SURVEY	NOTE BOOK	NO.
	SURVEYED	
	PLOTTED	
	TEMPLATE	
	AREAS	
	AREAS CHECKED	

BY	DATE

ORIGINAL SURVEY	NOTE BOOK	NO.
	SURVEYED	
	PLOTTED	
	TEMPLATE	
	AREAS	
	AREAS CHECKED	

BY	DATE

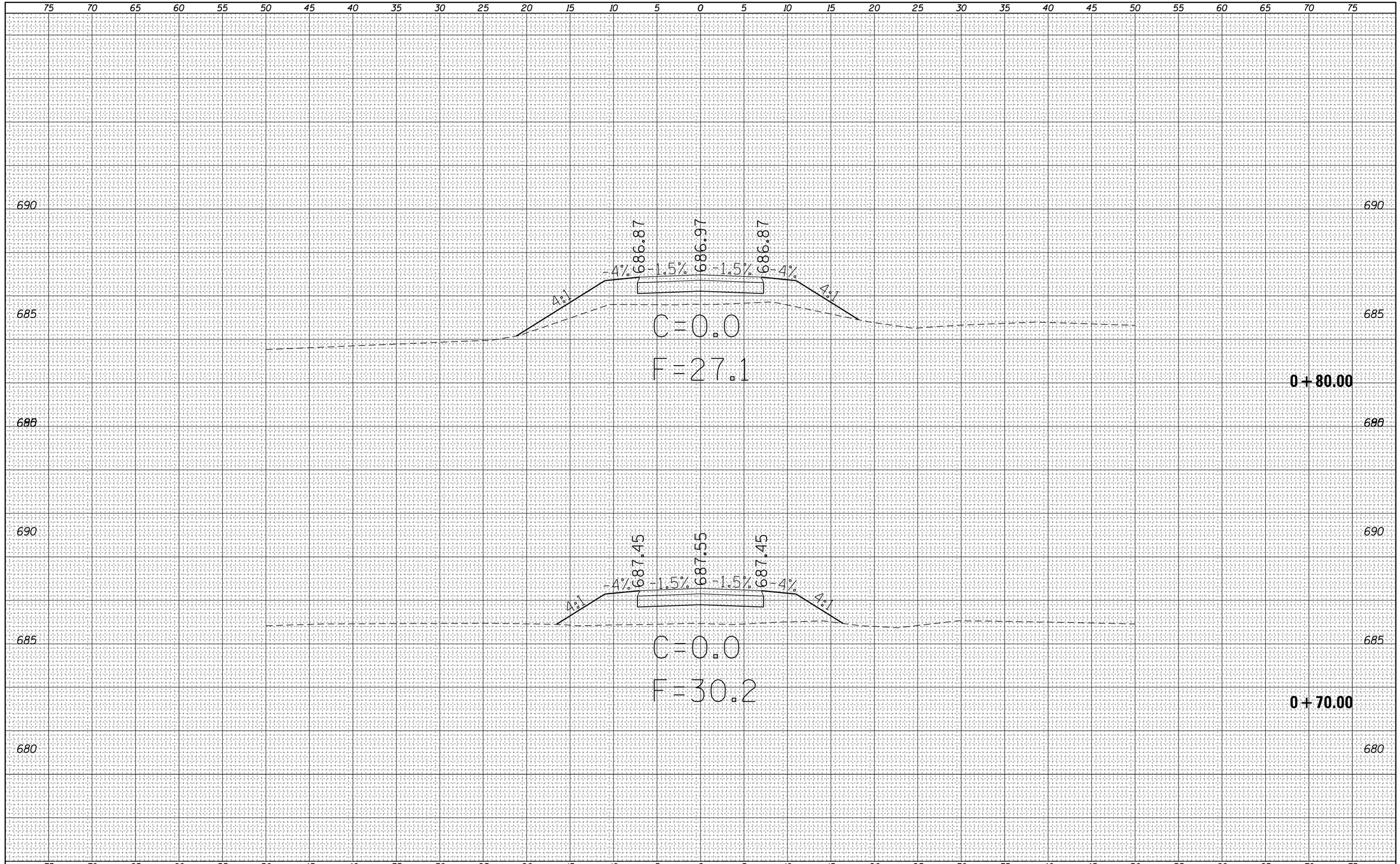

FILE NAME =	USER NAME = steffenmk	DESIGNED -	REVISED -
c:\pw_work\pwidot\steffenmk\d0158776\D774423-sht-PE3.dgn		DRAWN -	REVISED -
	PLOT SCALE = 10.0000 ' / in.	CHECKED -	REVISED -
Default	PLOT DATE = 5/7/2014	DATE -	REVISED -

STATE OF ILLINOIS
DEPARTMENT OF TRANSPORTATION

CROSS SECTIONS
P.E. #3

SCALE: 5 | SHEET 4 OF 5 SHEETS | STA. 0+70.00 | TO STA. 0+80.00

F.A.P. RTE.	SECTION	COUNTY	TOTAL SHEETS	SHEET NO.
91	5N	Coles	271	264

CONTRACT NO. 74423

ILLINOIS FED. AID PROJECT

FINAL SURVEY	NOTE BOOK	NO.
	SURVEYED	
	PLOTTED	
	TEMPLATE	
	AREAS	
	AREAS CHECKED	

BY	DATE

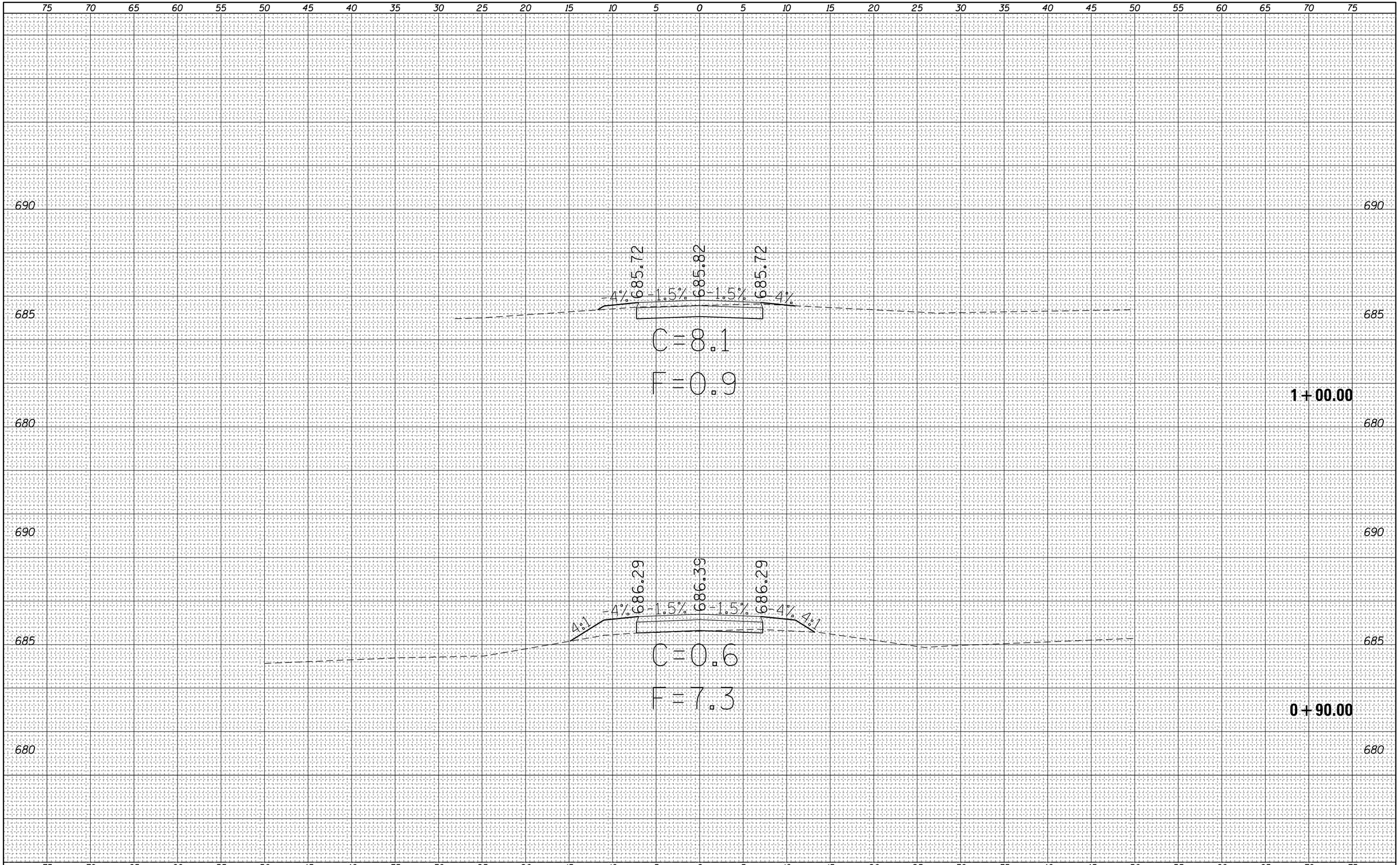

ORIGINAL SURVEY	NOTE BOOK	NO.
	SURVEYED	
	PLOTTED	
	TEMPLATE	
	AREAS	
	AREAS CHECKED	

BY	DATE

FILE NAME =	USER NAME = steffenmk	DESIGNED -	REVISED -
c:\pw_work\pwidot\steffenmk\d0158776\D774423-xsc-sht-PE3.dgn		DRAWN -	REVISED -
	PLOT SCALE = 10.0000 ' / in.	CHECKED -	REVISED -
Default	PLOT DATE = 5/7/2014	DATE -	REVISED -

STATE OF ILLINOIS
DEPARTMENT OF TRANSPORTATION

CROSS SECTIONS
P.E. #3

SCALE: 5 | SHEET 5 OF 5 SHEETS | STA. 0+90.00 | TO STA. 1+00.00

F.A.P. RTE.	SECTION	COUNTY	TOTAL SHEETS	SHEET NO.
91	5N	Coles	271	265

CONTRACT NO. 74423

ILLINOIS | FED. AID PROJECT

FINAL SURVEY	NOTE BOOK	NO.
SURVEYED		
PLOTTED		
TEMPLATE		
AREAS		
AREAS CHECKED		

BY	DATE

ORIGINAL SURVEY	NOTE BOOK	NO.
SURVEYED		
PLOTTED		
TEMPLATE		
AREAS		
AREAS CHECKED		

BY	DATE

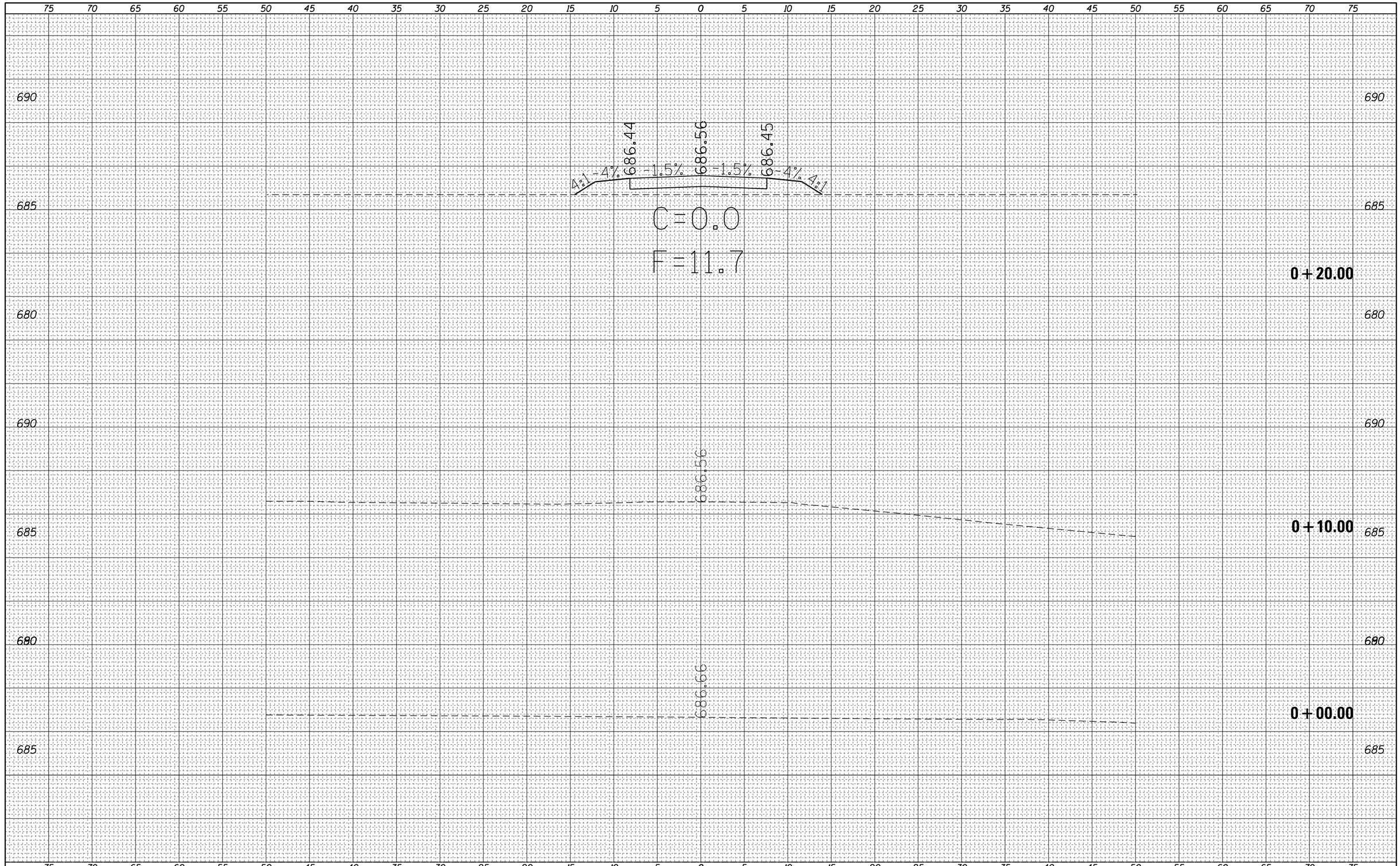

FILE NAME =	USER NAME = steffenmk	DESIGNED -	REVISED -
c:\pw_work\pwidot\steffenmk\d0158776\D774423-sht-PE4.dgn		DRAWN -	REVISED -
	PLOT SCALE = 10.0000 ' / in.	CHECKED -	REVISED -
Default	PLOT DATE = 5/7/2014	DATE -	REVISED -

STATE OF ILLINOIS
DEPARTMENT OF TRANSPORTATION

CROSS SECTIONS
P.E. #4

SCALE: 5 | SHEET 1 OF 3 SHEETS | STA. 0+00.00 | TO STA. 0+20.00

F.A.P. RTE.	SECTION	COUNTY	TOTAL SHEETS	SHEET NO.
91	5N	Coles	271	266
		CONTRACT NO. 74423		
		ILLINOIS FED. AID PROJECT		

FINAL SURVEY	NOTE BOOK	NO.
SURVEYED		
PLOTTED		
TEMPLATE		
AREAS		
AREAS CHECKED		

BY	DATE

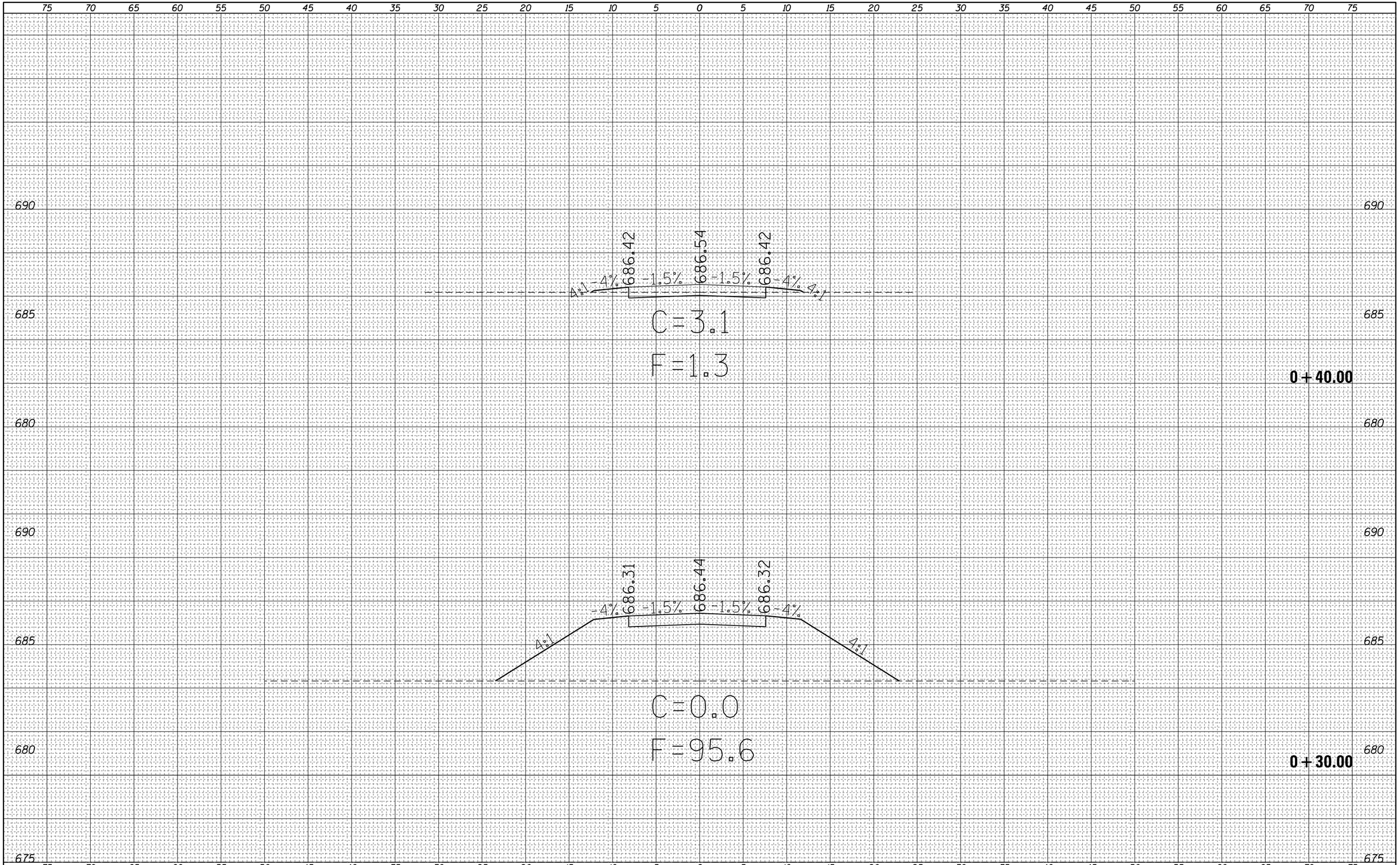

ORIGINAL SURVEY	NOTE BOOK	NO.
SURVEYED		
PLOTTED		
TEMPLATE		
AREAS		
AREAS CHECKED		

BY	DATE

FILE NAME =	USER NAME = steffenmk	DESIGNED -	REVISED -
c:\pw_work\pwidot\steffenmk\d0158776\D774423-xsc-sht-PE4.dgn		DRAWN -	REVISED -
	PLOT SCALE = 10.0000 ' / in.	CHECKED -	REVISED -
Default	PLOT DATE = 5/7/2014	DATE -	REVISED -

STATE OF ILLINOIS
DEPARTMENT OF TRANSPORTATION

CROSS SECTIONS
P.E. #4

SCALE: 5 | SHEET 2 OF 3 SHEETS | STA. 0+30.00 | TO STA. 0+40.00

F.A.P. RTE.	SECTION	COUNTY	TOTAL SHEETS	SHEET NO.
91	5N	Coles	271	267

CONTRACT NO. 74423

ILLINOIS | FED. AID PROJECT

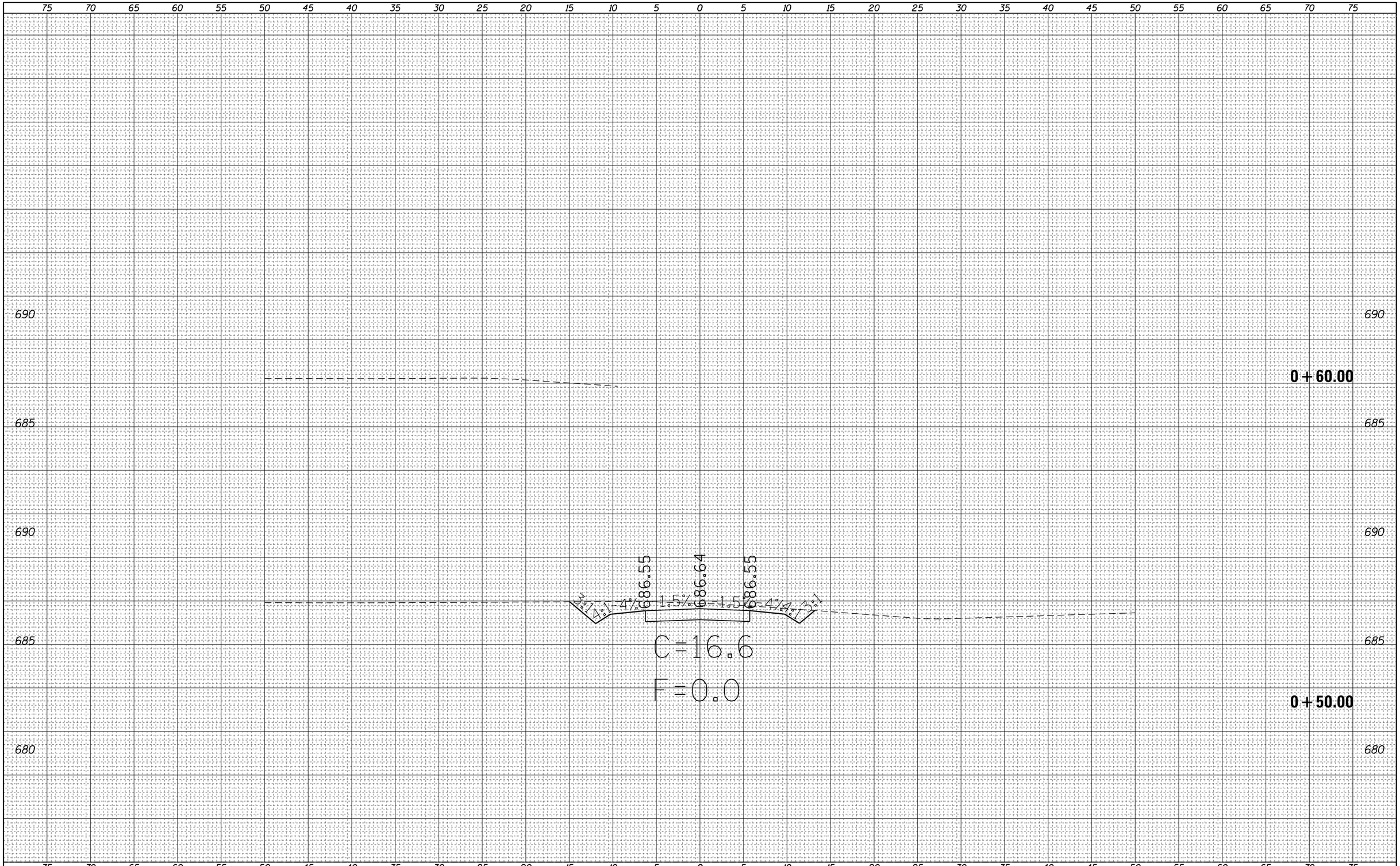

FINAL SURVEY		BY	DATE
NOTE BOOK	SURVEYED		
	PLOTTED		
	TEMPLATE		
	AREAS		
NO.	AREAS CHECKED		

ORIGINAL SURVEY		BY	DATE
NOTE BOOK	SURVEYED		
	PLOTTED		
	TEMPLATE		
	AREAS		
NO.	AREAS CHECKED		

FILE NAME = c:\pw_work\pwidot\steffenmk\d0158776\D774423-xsc-sht-PE4.dgn	USER NAME = steffenmk	DESIGNED -	REVISED -
		DRAWN -	REVISED -
	PLOT SCALE = 10.0000 ' / in.	CHECKED -	REVISED -
Default	PLOT DATE = 5/7/2014	DATE -	REVISED -

STATE OF ILLINOIS
DEPARTMENT OF TRANSPORTATION

CROSS SECTIONS
P.E. #4

SCALE: 5 | SHEET 3 OF 3 SHEETS | STA. 0+50.00 TO STA. 0+60.00

F.A.P. RTE.	SECTION	COUNTY	TOTAL SHEETS	SHEET NO.
91	5N	Coles	271	268

CONTRACT NO. 74423

ILLINOIS FED. AID PROJECT

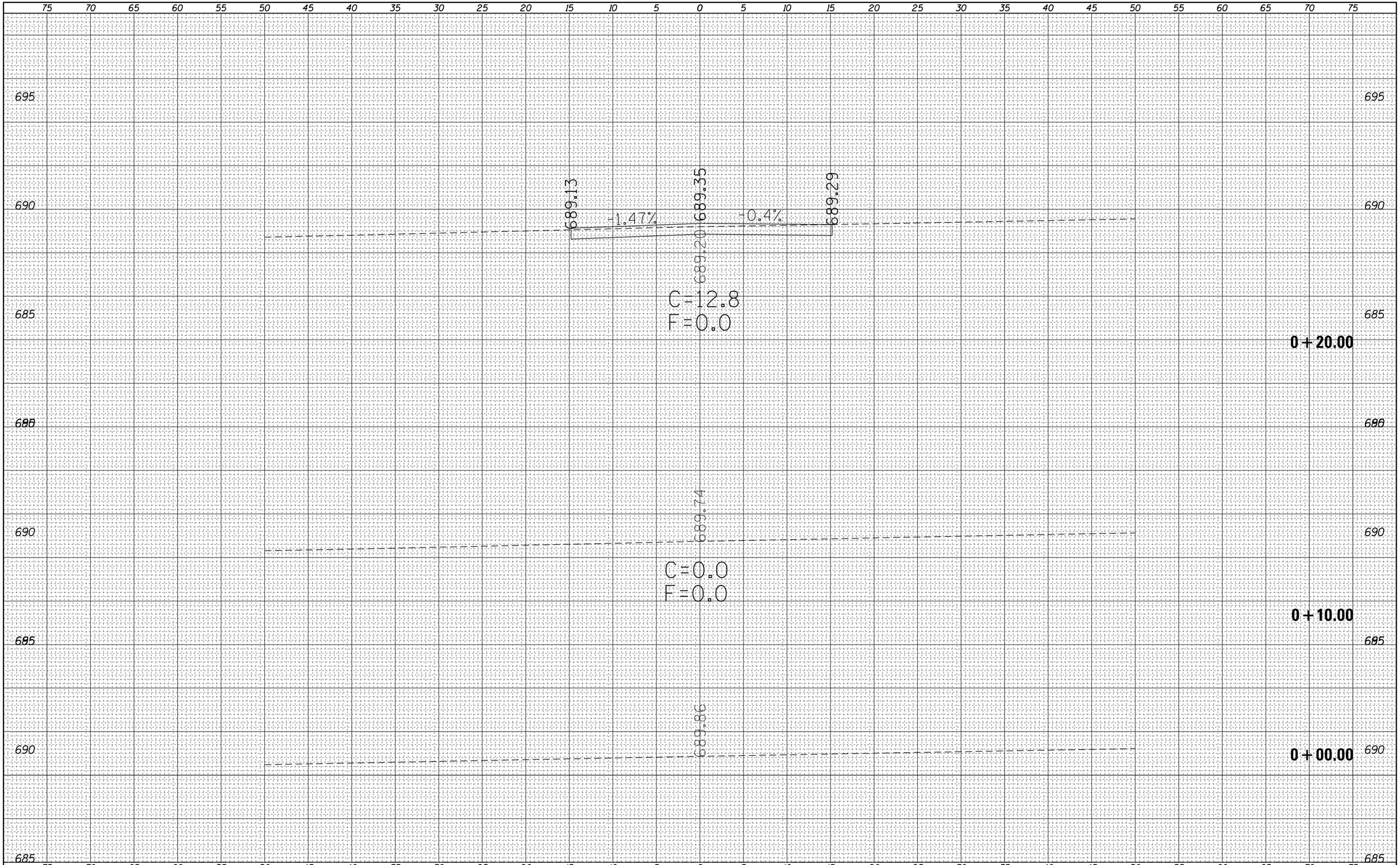

FINAL SURVEY	BY	DATE
SURVEYED		
PLOTTED		
TEMPLATE		
NOTE BOOK		
AREAS		
NO.	AREAS CHECKED	

ORIGINAL SURVEY	BY	DATE
SURVEYED		
PLOTTED		
TEMPLATE		
NOTE BOOK		
AREAS		
NO.	AREAS CHECKED	

FILE NAME =	USER NAME = steffenmk	DESIGNED -	REVISED -
c:\pw_work\pwidot\steffenmk\d0158776\D774423-sht-FE4.dgn		DRAWN -	REVISED -
	PLOT SCALE = 10.0000 ' / in.	CHECKED -	REVISED -
Default	PLOT DATE = 5/7/2014	DATE -	REVISED -

STATE OF ILLINOIS
DEPARTMENT OF TRANSPORTATION

CROSS SECTIONS
F.E.#4

SCALE: 5 | SHEET 1 OF 3 SHEETS | STA. 0+00.00 | TO STA. 0+20.00

F.A.P. RTE.	SECTION	COUNTY	TOTAL SHEETS	SHEET NO.
91	5N	Coles	271	269

CONTRACT NO. 74423

ILLINOIS | FED. AID PROJECT

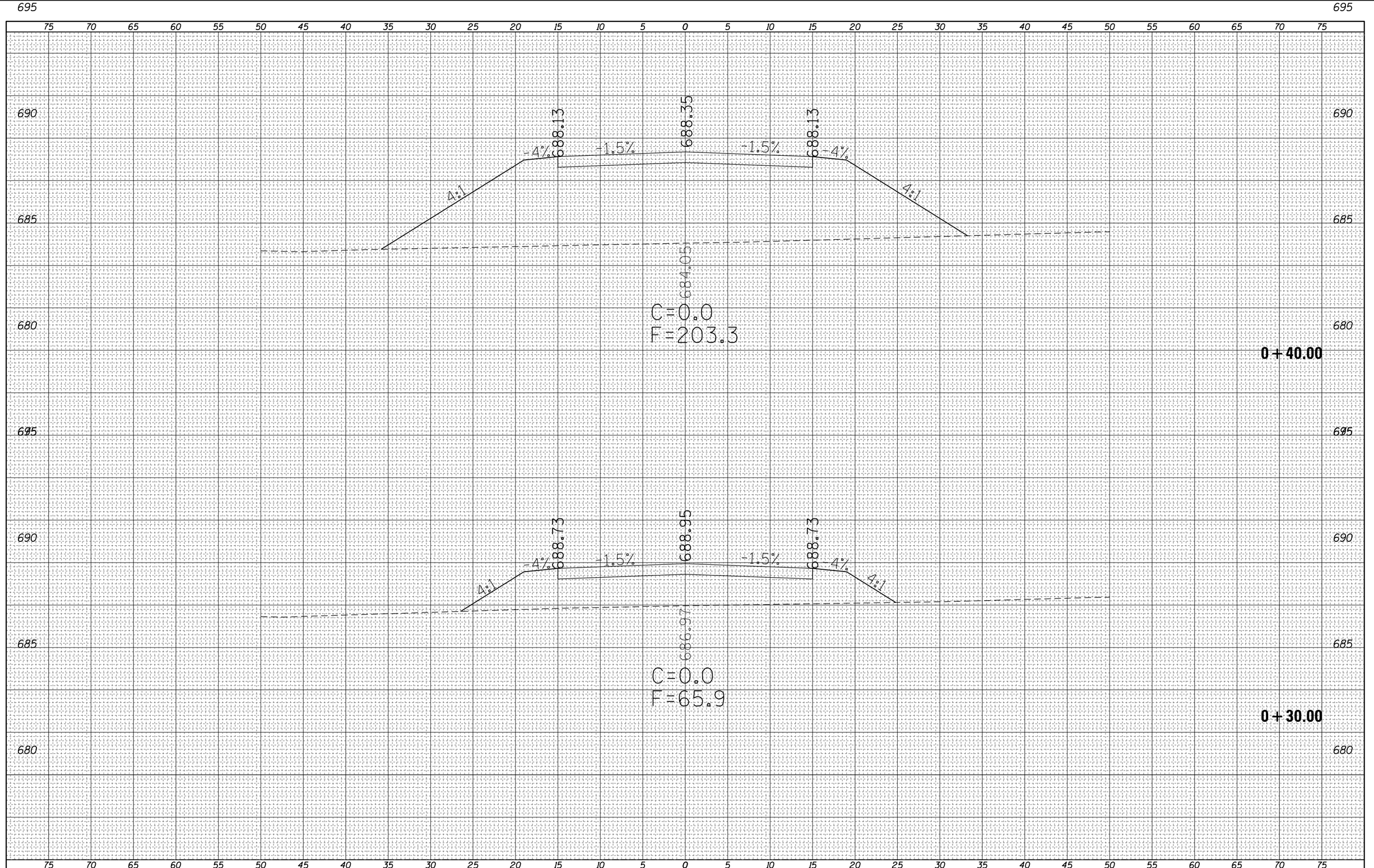

FINAL SURVEY

NO.	NOTE BOOK	SURVEYED	BY	DATE
		PLOTTED		
		TEMPLATE		
		AREAS		
		AREAS CHECKED		

ORIGINAL SURVEY

NO.	NOTE BOOK	SURVEYED	BY	DATE
		PLOTTED		
		TEMPLATE		
		AREAS		
		AREAS CHECKED		

FILE NAME =	USER NAME = steffenmk	DESIGNED -	REVISED -
c:\pw_work\pwidot\steffenmk\d0158776\D774423-xsc-sht-FE4.dgn		DRAWN -	REVISED -
Default	PLOT SCALE = 10.0000 ' / in.	CHECKED -	REVISED -
	PLOT DATE = 5/7/2014	DATE -	REVISED -

STATE OF ILLINOIS
DEPARTMENT OF TRANSPORTATION

CROSS SECTIONS
F.E.#4

SCALE: 5 | SHEET 2 OF 3 SHEETS | STA. 0+30.00 | TO STA. 0+40.00

F.A.P. RTE.	SECTION	COUNTY	TOTAL SHEETS	SHEET NO.
91	5N	Coles	271	270

CONTRACT NO. 74423

ILLINOIS FED. AID PROJECT

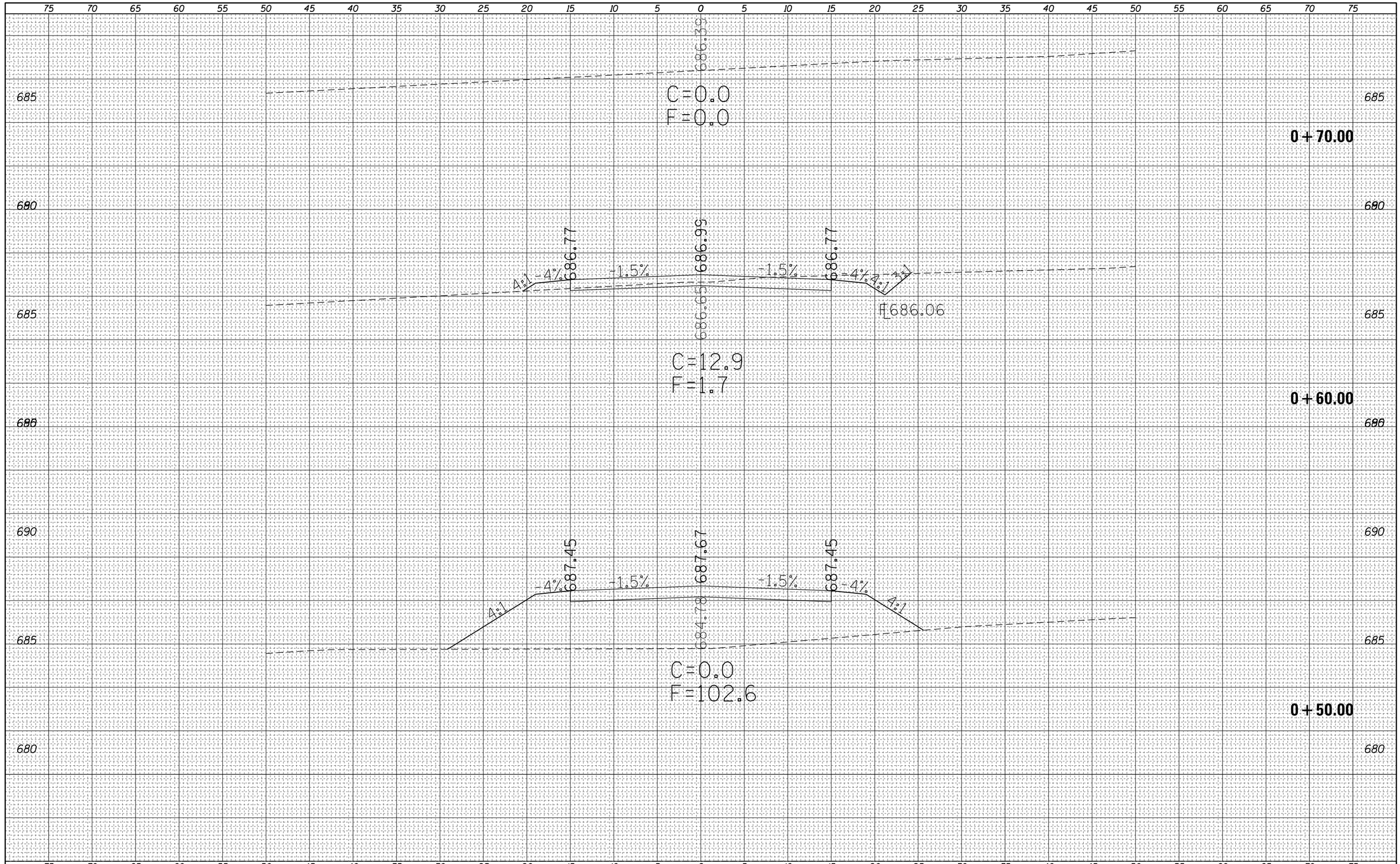

FINAL SURVEY

NO.	NOTE BOOK	SURVEYED	BY	DATE
		PLOTTED		
		TEMPLATE		
		AREAS		
		AREAS CHECKED		

ORIGINAL SURVEY

NO.	NOTE BOOK	SURVEYED	BY	DATE
		PLOTTED		
		TEMPLATE		
		AREAS		
		AREAS CHECKED		

FILE NAME =	USER NAME = steffenmk	DESIGNED -	REVISED -
c:\pw_work\pwidot\steffenmk\d0158776\D774423-xsc-sht-FE4.dgn		DRAWN -	REVISED -
	PLOT SCALE = 10.0000 ' / in.	CHECKED -	REVISED -
Default	PLOT DATE = 5/7/2014	DATE -	REVISED -

STATE OF ILLINOIS
DEPARTMENT OF TRANSPORTATION

CROSS SECTIONS
F.E.#4

SCALE: 5 | SHEET 3 OF 3 SHEETS | STA. 0+50.00 | TO STA. 0+70.00

F.A.P. RTE.	SECTION	COUNTY	TOTAL SHEETS	SHEET NO.
91	5N	Coles	271	271

CONTRACT NO. 74423

ILLINOIS | FED. AID PROJECT