F.A.P RTE.	SECTION	COUNTY	TOTAL SHEETS	SHEET NO.
0347	FAP 0347 22 BJ3	DUPAGE	98	1
	ILLINOIS	CONTRACT NO. 62T17		

STATE OF ILLINOIS 12-13-2024 SPECIAL LETTING ITEM 002

DEPARTMENT OF TRANSPORTATION

FOR INDEX OF SHEETS, SEE SHEET NO. 2

IMPROVEMENTS ARE LOCATED IN THE VILLAGE GLEN ELLYN

PROPOSED HIGHWAY PLANS

FAP ROUTE: 0347 IL 38 (ROOSEVELT RD) AT IL 53
SECTION: FAP 0347 22 BJ3
PROJECT: NHPP-E3Q6 (948)
BRIDGE JOINT REPLACE/REPAIR, BRIDGE DECK OVERLAY
DUPAGE COUNTY

C-91-302-22

D-91-249-22

DESIGN DESIGNATON
PRINCIPAL ARTERIAL: IL 38 (ROOSEVELT RD)
PRINCIPAL ARTERIAL: IL 53

TRAFFIC DATA
IL 38 (ROOSEVELT RD) ADT 37,500 (2021)
% TRUCKS= 6.60%

IL 53 ADT 15,000 (2021)
% TRUCKS= 3.17%

POSTED SPEED LIMIT

IL 38 (WEST)	35 MPH (35 MPH)
IL 38 (EAST)	45 MPH (45 MPH)
IL 53	40 MPH (40 MPH)

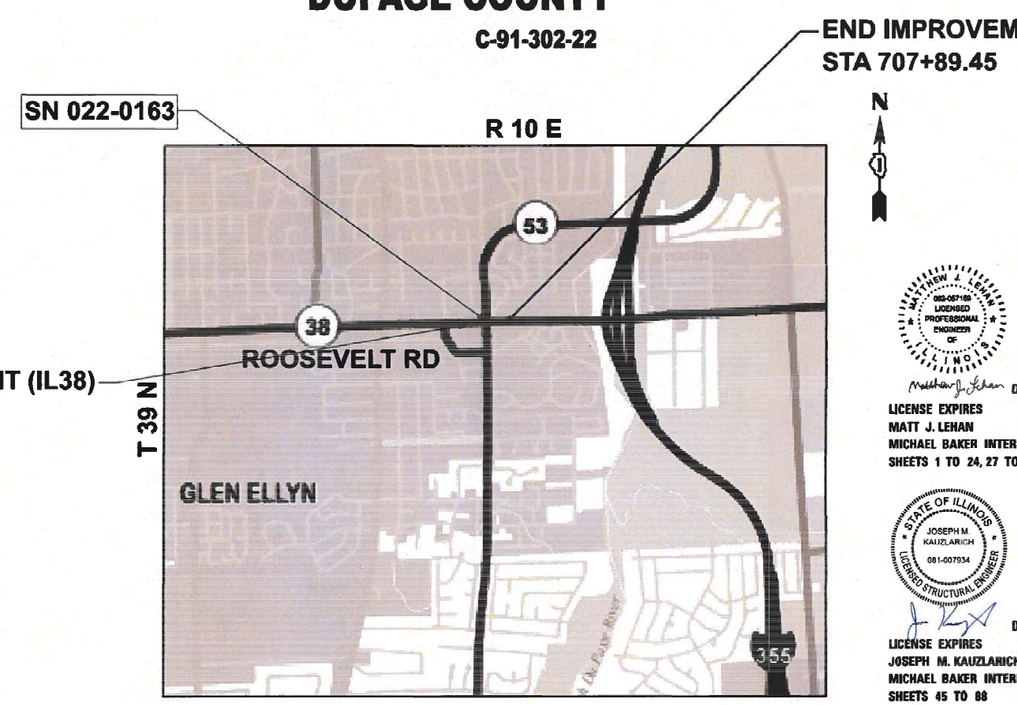

LOCATION OF SECTION INDICATED THUS:-

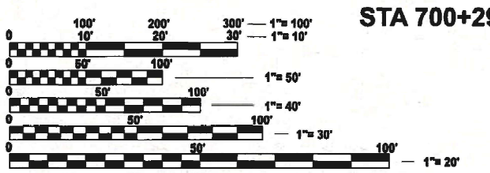

FULL SIZE PLANS HAVE BEEN PREPARED USING STANDARD ENGINEERING SCALES. *REDUCED SIZED PLANS WILL NOT* CONFORM TO STANDARD SCALES. IN MAKING MEASUREMENTS ON REDUCED PLANS, THE ABOVE SCALES MAY BE USED.

J.U.L.I.E.
JOINT UTILITY LOCATION INFORMATION FOR EXCAVATION
1-800-892-0123
OR 811

MILTON TOWNSHIP
LOCATION MAP
SCALE = N.T.S

GROSS & NET LENGTH = 759.58' (0.144 MI)

MATTHEW J. LEHAN 062-057169 LICENSED PROFESSIONAL ENGINEER OF ILLINOIS

DATE: 08/09/2024
LICENSE EXPIRES 11-30-2025
MATT J. LEHAN
MICHAEL BAKER INTERNATIONAL
SHEETS 1 TO 24, 27 TO 44, 89-98

STATE OF ILLINOIS JOSEPH M KAUZLARICH 081-007934 LICENSED STRUCTURAL ENGINEER

DATE: 08/09/2024
LICENSE EXPIRES 11-30-2024
JOSEPH M. KAUZLARICH
MICHAEL BAKER INTERNATIONAL
SHEETS 45 TO 88

STATE OF ILLINOIS
DEPARTMENT OF TRANSPORTATION

SUBMITTED Aug 13th 2024
REGIONAL ENGINEER

October 4, 2024
ENGINEER OF DESIGN AND ENVIRONMENT

October 4, 2024
DIRECTOR OF HIGHWAYS PROJECT IMPLEMENTATION

PROJECT ENGINEER : MR. LUKASZ POCIECHA (847) 705-4255
PROJECT MANAGER : MR. VESELIN VELICHKOV

CONTRACT NO. 62T17

Michael Baker
INTERNATIONAL
200 W Adams Street, Suite 1800, Chicago, IL 60606
Phone: (312) 707-8770 · MBAKERINTL.COM

PRINTED BY THE AUTHORITY OF THE STATE OF ILLINOIS

REV-SEP

INDEX OF SHEETS

HIGHWAY STANDARDS

STD. NO.	STANDARD TITLE
000001-08	STANDARD SYMBOLS, ABBREVIATIONS AND PATTERNS
001001-02	AREAS OF REINFORCEMENT BAR
001006	DECIMAL OF AN INCH AND OF A FOOT
280001-07	TEMPORARY EROSION CONTROL SYSTEMS
420001-10	PAVEMENT JOINTS
424001-11	PERPENDICULAR CURB RAMPS FOR SIDEWALKS
424006-05	DIANGONAL CURB RAMPS FOR SIDEWALKS
424011-04	CORNER PARALLEL CURB RAMPS FOR SIDEWALK
424021-06	DEPRESSED CORNER FOR SIDEWALKS
442101-09	CLASS B PATCHES
606001-08	CONCRETE CURB TYPE B AND COMBINATION CONCRETE CURB AND GUTTER
606201-04	TYPE B GUTTER (INLET, OUTLET & ENTRANCE)
606301-04	PC CONCRETE ISLANDS AND MEDIANS
630001-13	STEEL PLATE BEAM GUARDRAIL
631006-08	TRAFFIC BARRIER TERMINAL, TYPE 1B
631031-18	TRAFFIC BARRIER TERMINAL, TYPE 6
701101-05	OFF-ROAD OPERATIONS, MULTILANE, 15" TO 24" FROM EDGE OF PAVEMENT
701426-09	LANE CLOSURE, MULTILANE, INTERMITTENT OR MOVING OPERATION, FOR SPEEDS ≥ 45 MPH
701427-05	LANE CLOSURE, MULTILANE, INTERMITTENT OR MOVING OPERATION, FOR SPEEDS < 40 MPH
701502-09	URBAN LANE CLOSURE, 2L 2W WITH BIDIRECTIONAL LEFT TURN LANE
701601-09	URBAN LANE CLOSURE MULTILANE, 1W 2W WITH NONTRAVERSABLE MEDIAN
701602-10	URBAN LANE CLOSURE, MULTILANE, 2W WITH BIDIRECTIONAL LEFT TURN LANE
701606-10	URBAN SINGLE LANE CLOSURE MULTILANE, 2W WITH MOUNTABLE MEDIAN
701611-01	URBAN HALF ROAD CLOSURE, MULTILANE, 2W WITH MOUNTABLE MEDIAN
701701-10	URBAN LANE CLOSURE, MULTILANE INTERSECTION
701801-06	SIDEWALK, CORNER OR CROSSWALK CLOSURE
701901-09	TRAFFIC CONTROL DEVICES
704001-08	TEMPORARY CONCRETE BARRIER
780001-05	TYPICAL PAVEMENT MARKINGS
781001-04	TYPICAL APPLICATIONS RAISED REFLECTIVE PAVEMENT MARKERS
782006-01	GUARDRAIL AND BARRIER WALL REFLECTOR MOUNTING DETAILS
814001-03	HANDHOLES
857001-01	STANDARD PHASE DESIGNATION DIAGRAMS AND PHASE SEQUENCES
862001-01	UNINTERRUPTABLE POWER SUPPLY (UPS)
873001-02	TRAFFIC SIGNAL GROUNDING & BONDING
880001-01	SPAN WIRE MOUNTED SIGNALS AND FLASHNG BEACON INSTALLATION
880006-01	TRAFFIC SIGNAL MOUNTING DETAILS

GENERAL NOTES

1. THE CONTRACTOR SHALL COORDINATE CONSTRUCTION ACTIVITIES WITH UTILITY COMPANIES AND THE VILLAGE OF GLEN ELLYN.
2. THE CONTRACTOR WILL NOT BE ALLOWED TO SET UP A YARD OR FIELD OFFICE ON THE STATE PROPERTY WITHOUT WRITTEN PERMISSION FROM THE DEPARTMENT.
3. IT SHALL BE CONTRACTOR'S RESPONSIBILITY TO VERIFY ALL DIMENSIONS AND CONDITIONS EXISTING IN THE FIELD PRIOR TO CONSTRUCTION AND ORDERING OF MATERIALS.
4. THE CONTRACTOR SHALL CONTACT KALPANA KANNAN-HOSADURGA, THE DISTRICT ONE TRAFFIC CONTROL SUPERVISOR, AT KALPANA.KANNAN@ILLINOIS.GOV A MINIMUM OF 72 HOURS PRIOR TO THE PLACEMENT OF ANY TEMPORARY TRAFFIC CONTROL DEVICES.
5. THE RESIDENT ENGINEER SHALL CONTACT WALTER CZARNY, AREA TRAFFIC ENGINEER, AT WALTER.CZARNY@ILLINOIS.GOV AT LEAST TWO (2) WEEKS PRIOR TO THE PLACEMENT OF PERMANENT PAVEMENT MARKINGS.
6. THE CONTRACTOR SHALL USE CARE IN GRADING OR EXCAVATING NEAR ANY AND ALL EXISTING ITEMS THAT WILL NOT BE REMOVED. ANY DAMAGE DONE TO THE EXISTING ITEMS BY THE CONTRACTOR SHALL REPAIRED OR REPLACED TO THE SATISFATION OF THE ENGINEER AT THE CONTRACTOR'S OWN EXPENSE.
7. ANY SIGNAGE, PAVEMENT MARKINGS, AND REFLECTORS DAMAGED DURING CONSTRUCTION SHALL BE REPLACED AT THE CONTRACTOR'S EXPENSE.
8. THE CONTRACTOR SHALL MAINTAIN POSITIVE DRAINAGE THROUGHOUT THE DURATION OF THE CONTRACT AND MAINTAIN ALL PUBLIC AND PRIVATE DRAINS.
9. BEFORE STARTING ANY EXCAVATION, THE CONTRACTOR SHALL CALL J.U.L.I.E. AT 1-800-892-0123 OR 811 FOR FIELD LOCATIONS OF BURIED ELECTRIC, TELEPHONE, AND GAS FACILITIES. (48 HOUR NOTIFICATION IS REQUIRED)
10. DO NOT SCALE PLANS FOR CONSTRUCTION DIMENSIONS.
11. THE CONTRACTOR SHALL OBTAIN ALL NECESSARY PERMITS, AS REQUIRED, PRIOR TO COMMENCING WITH CONSTRUCTION.
12. SAW CUTTING PRIOR TO ANY REMOVAL ITEMS NOTED ON THE PLANS OR DIRECTED BY THE ENGINEER SHALL BE CONSIDERED INCLUDED IN THE COST OF ITEMS BEING REMOVED.
13. BEFORE BEGINNING ANY WORK, THE CONTRACTOR SHALL RETAIN AND RECORD FOR FUTURE REFERENCE ALL EXISTING PAVEMENT MARKING LINES (AND RAISED REFLECTIVE PAVEMENT MARKERS) IN ORDER THAT THESE LOCATIONS CAN BE RE-ESTABLISHED FOR STRIPING. EXACT LOCATIONS OF ALL PAVEMENT MARKINGS SHALL BE AS DIRECTED BY THE ENGINEERS.
14. THE CONTRACTOR SHALL MAINTAIN PEDESTRIAN ACCESS ACROSS IL-38 AT THE INTERSECTION OF BAKER HILL DR THROUGH THE PROJECT DURATION.
15. THE CONTRACTOR SHALL REMOVE THE EXISTING FENCE ALONG PARAPET OF SN. 022-0163, APPLY CONCRETE FINISH TO EXISTING AND PROPOSED PARAPETS, AND INSTALL THE FENCE RAILING TO THE PARAPETS.

COMMITMENTS

1. NONE.

CODE NO.	ITEM	UNIT	TOTAL QUANTITY	CONSTRUCTION CODE 80% FED 20% STATE ROADWAY 0006 URBAN	80% FED 20% STATE BRIDGE 0047 SN 022-0163	TRAFFIC SIGNAL 80% FED/20% STATE SAFETY 0021
20200100	EARTH EXCAVATION	CU YD	175	175		
20201200	REMOVAL AND DISPOSAL OF UNSUITABLE MATERIAL	CU YD	10	10		
28000510	INLET FILTERS	EACH	9	9		
31101200	SUBBASE GRANULAR MATERIAL, TYPE B 4"	SQ YD	325	325		
35101500	AGGREGATE BASE COURSE, TYPE B	CU YD	220	220		
40600290	BITUMINOUS MATERIALS (TACK COAT)	POUND	799	799		
40600370	LONGITUDINAL JOINT SEALANT	FOOT	1,398	1,398		
40600400	MIXTURE FOR CRACKS, JOINTS,AND FLANGEWAYS	TON	1.5	1.5		
40600985	PORTLAND CEMENT CONCRETE SURFACE REMOVAL - BUTT JOINT	SQ YD	493	493		
40603200	POLYMERIZED HOT-MIX ASPHALT BINDER COURSE, IL-4.75, N50	TON	140	140		
40605026	POLYMERIZED HOT-MIX ASPHALT SURFACE COURSE, STONE MATRIX ASPHALT, 9.5, MIX "F", N80	TON	206	206		
42400200	PORTLAND CEMENT CONCRETE SIDEWALK 5 INCH	SQ FT	925	925		
42400800	DETECTABLE WARNINGS	SQ FT	75	75		
44000100	PAVEMENT REMOVAL	SQ YD	487	487		
44000500	COMBINATION CURB AND GUTTER REMOVAL	FOOT	1,340	1,340		

* SPECIALTY ITEM

CODE NO.	ITEM	UNIT	TOTAL QUANTITY	CONSTRUCTION CODE 80% FED 20% STATE ROADWAY 0006 URBAN	80% FED 20% STATE BRIDGE 0047 SN 022-0163	TRAFFIC SIGNAL 80% FED/20% STATE SAFETY 0021
44000600	SIDEWALK REMOVAL	SQ FT	1,359	1,359		
44003100	MEDIAN REMOVAL	SQ FT	2,962	2,962		
44004250	PAVED SHOULDER REMOVAL	SQ YD	5	5		
44200966	CLASS B PATCHES, TYPE I, 10 INCH	SQ YD	9	9		
44200970	CLASS B PATCHES, TYPE II, 10 INCH	SQ YD	161	161		
44200974	CLASS B PATCHES, TYPE III, 10 INCH	SQ YD	38	38		
44201294	CLASS B PATCH - EXPANSION JOINT	FOOT	100	100		
44201296	DEFORMED BARS - EXPANSION JOINT	EACH	20	20		
50102400	CONCRETE REMOVAL	CU YD	27.8		27.8	
50157300	PROTECTIVE SHIELD	SQ YD	818		818	
50200100	STRUCTURE EXCAVATION	CU YD	51		51	
50300255	CONCRETE SUPERSTRUCTURE	CU YD	27.7		27.7	
50300300	PROTECTIVE COAT	SQ YD	1,652		1,652	
50301350	CONCRETE SUPERSTRUCTURE (APPROACH SLAB)	CU YD	60.5		60.5	

* SPECIALTY ITEM

	CODE NO.	ITEM	UNIT	TOTAL QUANTITY	CONSTRUCTION CODE: 80% FED 20% STATE ROADWAY 0006 URBAN	80% FED 20% STATE BRIDGE 0047 SN 022-0163	TRAFFIC SIGNAL 80% FED/20% STATE SAFETY 0021
	50800205	REINFORCEMENT BARS, EPOXY COATED	POUND	25,940		25,940	
	50800515	BAR SPLICERS	EACH	48		48	
	50901730	BRIDGE FENCE RAILING	FOOT	163		163	
	52000110	PREFORMED JOINT STRIP SEAL	FOOT	178		178	
	58700300	CONCRETE SEALER	SQ FT	1,613		1,613	
	60300305	FRAMES AND LIDS TO BE ADJUSTED	EACH	3	3		
	60300405	VALVE BOX FRAMES TO BE ADJUSTED	EACH	2	2		
	60602800	CONCRETE GUTTER, TYPE B	FOOT	482	482		
	60603800	COMBINATION CONCRETE CURB AND GUTTER, TYPE B-6.12	FOOT	776	776		
	60605000	COMBINATION CONCRETE CURB AND GUTTER, TYPE B-6.24	FOOT	444	444		
	60618300	CONCRETE MEDIAN SURFACE, 4 INCH	SQ FT	2,841	2,841		
*	63100085	TRAFFIC BARRIER TERMINAL, TYPE 6	EACH	1	1		
*	63100167	TRAFFIC BARRIER TERMINAL, TYPE 1 (SPECIAL) TANGENT	EACH	1	1		
	63200310	GUARDRAIL REMOVAL	FOOT	137	137		
*	66900200	NON-SPECIAL WASTE DISPOSAL	CU YD	240	240		

* SPECIALTY ITEM

	CODE NO.	ITEM	UNIT	TOTAL QUANTITY	CONSTRUCTION CODE: 80% FED 20% STATE ROADWAY 0006 URBAN	80% FED 20% STATE BRIDGE 0047 SN 022-0163	TRAFFIC SIGNAL 80% FED/20% STATE SAFETY 0021
*	66900530	SOIL DISPOSAL ANALYSIS	EACH	2	2		
*	66901001	REGULATED SUBSTANCES PRE-CONSTRUCTION PLAN	L SUM	1	1		
*	66901003	REGULATED SUBSTANCES FINAL CONSTRUCTION REPORT	L SUM	1	1		
*	66901006	REGULATED SUBSTANCES MONITORING	CAL DA	15	15		
	67100100	MOBILIZATION	L SUM	1	1		
	70107025	CHANGEABLE MESSAGE SIGN	CAL DA	30	30		
	70300150	SHORT TERM PAVEMENT MARKING REMOVAL	SQ FT	12,640	12,640		
	70307100	TEMPORARY PAVEMENT MARKING LETTERS AND SYMBOLS - TYPE IV TAPE	SQ FT	182	182		
	70307120	TEMPORARY PAVEMENT MARKING - LINE 4" - TYPE IV TAPE	FOOT	14,100	14,100		
	70307130	TEMPORARY PAVEMENT MARKING - LINE 6" - TYPE IV TAPE	FOOT	592	592		
	70307210	TEMPORARY PAVEMENT MARKING - LINE 24"- TYPE IV TAPE	FOOT	145	145		
	70400100	TEMPORARY CONCRETE BARRIER	FOOT	812.5	812.5		
	70400200	RELOCATE TEMPORARY CONCRETE BARRIER	FOOT	550	550		
	70600255	IMPACT ATTENUATORS, TEMPORARY (FULLY REDIRECTIVE, NARROW), TEST LEVEL 2	EACH	1	1		
	70600260	IMPACT ATTENUATORS, TEMPORARY (FULLY REDIRECTIVE, NARROW), TEST LEVEL 3	EACH	2	2		

* SPECIALTY ITEM

	CODE NO.	ITEM	UNIT	TOTAL QUANTITY	CONSTRUCTION CODE 80% FED 20% STATE ROADWAY 0006 URBAN	80% FED 20% STATE BRIDGE 0047 SN 022-0163	TRAFFIC SIGNAL 80% FED/20% STATE SAFETY 0021
	70600322	IMPACT ATTENUATORS, RELOCATE (FULLY REDIRECTIVE, NARROW), TEST LEVEL 2	EACH	2	2		
	70600332	IMPACT ATTENUATORS, RELOCATE (FULLY REDIRECTIVE, NARROW), TEST LEVEL 3	EACH	2	2		
*	72000100	SIGN PANEL - TYPE 1	SQ FT	14	14		
*	72400205	REMOVE AND RELOCATE SIGN PANEL ASSEMBLY - TYPE A	EACH	3	3		
*	72400310	REMOVE SIGN PANEL - TYPE 1	SQ FT	5	5		
*	72501000	TERMINAL MARKER - DIRECT APPLIED	EACH	2	2		
*	72800100	TELESCOPING STEEL SIGN SUPPORT	FOOT	12	12		
*	78000100	THERMOPLASTIC PAVEMENT MARKING - LETTERS AND SYMBOLS	SQ FT	218	218		
*	78000400	THERMOPLASTIC PAVEMENT MARKING - LINE 6"	FOOT	504	504		
*	78004635	PREFORMED PLASTIC PAVEMENT MARKING, TYPE D - STANDARD - LINE 7"	FOOT	1,240	1,240		
*	78009000	MODIFIED URETHANE PAVEMENT MARKING - LETTERS AND SYMBOLS	SQ FT	182	182		
*	78009004	MODIFIED URETHANE PAVEMENT MARKING - LINE 4"	FOOT	4,739	4,739		
*	78009008	MODIFIED URETHANE PAVEMENT MARKING - LINE 8"	FOOT	224	224		
*	78009012	MODIFIED URETHANE PAVEMENT MARKING - LINE 12"	FOOT	460	460		
*	78009024	MODIFIED URETHANE PAVEMENT MARKING - LINE 24"	FOOT	35	35		

* SPECIALTY ITEM

	CODE NO.	ITEM	UNIT	TOTAL QUANTITY	CONSTRUCTION CODE 80% FED 20% STATE ROADWAY 0006 URBAN	80% FED 20% STATE BRIDGE 0047 SN 022-0163	TRAFFIC SIGNAL 80% FED/20% STATE SAFETY 0021
*	78011040	GROOVING FOR RECESSED PAVEMENT MARKING 8"	FOOT	1,240	1,240		
*	78100100	RAISED REFLECTIVE PAVEMENT MARKER	EACH	6	6		
*	78200005	GUARDRAIL REFLECTORS, TYPE A	EACH	8	8		
	78300200	RAISED REFLECTIVE PAVEMENT MARKER REMOVAL	EACH	6	6		
	78300202	PAVEMENT MARKING REMOVAL - WATER BLASTING	SQ FT	1,142	1,142		
*	85000200	MAINTENANCE OF EXISTING TRAFFIC SIGNAL INSTALLATION	EACH	1			1
*	87301305	ELECTRIC CABLE IN CONDUIT, LEAD-IN, NO. 14 1PAIR	FOOT	1,266			1,266
*	88500100	INDUCTIVE LOOP DETECTOR	EACH	3			3
*	89000100	TEMPORARY TRAFFIC SIGNAL INSTALLATION	EACH	1			1
*	89502200	MODIFY EXISTING CONTROLLER	EACH	1			1
*	89502300	REMOVE ELECTRIC CABLE FROM CONDUIT	FOOT	100			100
*	89502375	REMOVE EXISTING TRAFFIC SIGNAL EQUIPMENT	EACH	1			1
*	89502376	REBUILD EXISTING HANDHOLE	EACH	3		2	1
	Z0005216	HOT-MIX ASPHALT STABILIZATION 6" AT STEEL PLATE BEAM GUARD RAIL	SQ YD	23	23		
	Z0006016	BRIDGE DECK LATEX CONCRETE OVERLAY, 2 3/4 INCHES	SQ YD	1,493		1,493	

* SPECIALTY ITEM

1 REVISED SHEET 10/24/2024

MODEL: Summary of Quantities [Sheet]
FILE NAME: pw://mb-us-pw.bentley.com:mb-us-pw-03/Documents/Chicago_IL/01_Projects/D1_IDOT_Var_DEserve_PTB208_005/W01 - 198294/3.0 Deliverables/3.3 CADD Data/Sheets/D162117-sht-soq03.dgn

Michael Baker INTERNATIONAL
200 West Adams Street, Suite 1800, Chicago, IL 60606
Phone: (312) 707-8770 · MBAKERINTL.COM

USER NAME = Connor.Liss	DESIGNED - ZJT	REVISED -	
	DRAWN - MK	REVISED -	
PLOT SCALE = 0.16666667 ' / in.	CHECKED - RBB	REVISED -	
PLOT DATE = 8/9/2024	DATE - 08/09/2024	REVISED -	

STATE OF ILLINOIS
DEPARTMENT OF TRANSPORTATION

SUMMARY OF QUANTITIES
IL 38 (ROOSEVELT ROAD) OVER IL 53

SCALE: Full Size 1 = 1 | SHEET 3 OF 5 SHEETS | STA. TO STA.

F.A.P. RTE.	SECTION	COUNTY	TOTAL SHEETS	SHEET NO.
0347	0347 22 BJ3	DUPAGE	98	5

CONTRACT NO. 62T17

ILLINOIS | FED. AID PROJECT

REV-SEP

	CODE NO.	ITEM	UNIT	TOTAL QUANTITY	CONSTRUCTION CODE: 80% FED 20% STATE ROADWAY 0006 URBAN	80% FED 20% STATE BRIDGE 0047 SN 022-0163	TRAFFIC SIGNAL 80% FED/20% STATE SAFETY 0021
	Z0012130	BRIDGE DECK SCARIFICATION 3/4"	SQ YD	1,493		1,493	
	Z0012754	STRUCTURAL REPAIR OF CONCRETE (DEPTH EQUAL TO OR LESS THAN 5 INCHES)	SQ FT	1,280		1,280	
	Z0012755	STRUCTURAL REPAIR OF CONCRETE (DEPTH GREATER THAN 5 INCHES)	SQ FT	60		60	
	Z0013798	CONSTRUCTION LAYOUT	L SUM	1	1		
	Z0016002	DECK SLAB REPAIR (FULL DEPTH, TYPE II)	SQ YD	2		2	
	Z0018100	DRAINAGE STRUCTURE ADJUSTMENT (SPECIAL)	EACH	2	2		
	Z0018400	DRAINAGE STRUCTURES TO BE ADJUSTED	EACH	1		1	
☐	Z0018500	DRAINAGE STRUCTURES TO BE CLEANED	EACH	1		1	
	Z0029090	DIAMOND GRINDING (BRIDGE SECTION)	SQ YD	1,427		1,427	
	Z0030850	TEMPORARY INFORMATION SIGNING	SQ FT	103	103		
*	Z0033044	RE-OPTIMIZE TRAFFIC SIGNAL SYSTEM LEVEL 1	EACH	1			1
	X4406808	PORTLAND CEMENT CONCRETE SURFACE REMOVAL 1"	SQ YD	1,391	1,391		
	X4406814	PORTLAND CEMENT CONCRETE SURFACE REMOVAL 1 3/4"	SQ YD	103	103		
	Z0062456	TEMPORARY PAVEMENT	SQ YD	487	487		
	Z0062458	TEMPORARY PAVEMENT (VARIABLE DEPTH)	TON	10	10		

* SPECIALTY ITEM

	CODE NO.	ITEM	UNIT	TOTAL QUANTITY	CONSTRUCTION CODE: 80% FED 20% STATE ROADWAY 0006 URBAN	80% FED 20% STATE BRIDGE 0047 SN 022-0163	TRAFFIC SIGNAL 80% FED/20% STATE SAFETY 0021
	Z0073200	TEMPORARY SHORING AND CRIBBING	EACH	6		6	
*	Z0073510	TEMPORARY TRAFFIC SIGNAL TIMING	EACH	1			1
	X0322102	TEMPORARY SIDEWALK RAMP	EACH	4	4		
	X0326766	CLEAN & RESEAL RELIEF JOINT	FOOT	154		154	
	X0327611	REMOVE AND REINSTALL BRICK PAVER	SQ FT	202	202		
	X0327989	REMOVE EXISTING BRICK PAVERS	SQ FT	497	497		
	X4400100	PORTLAND CEMENT CONCRETE SURFACE REMOVAL (VARIABLE DEPTH)	SQ YD	117	117		
	X5030250	BRIDGE DECK GROOVING (LONGITUDINAL)	SQ YD	1,493		1,493	
	X5091600	STEEL RAILING REMOVAL	FOOT	163		163	
	X6060097	CLASS SI CONCRETE (OUTLET), SPECIAL	CU YD	2.6	2.6		
*	X6310187	TRAFFIC BARRIER TERMINAL, TYPE 6 (MODIFIED)	EACH	1	1		
	X6700407	ENGINEER'S FIELD OFFICE, TYPE A (D1)	CAL MO	12	12		
	X7010216	TRAFFIC CONTROL AND PROTECTION, (SPECIAL)	L SUM	1	1		
	X7830050	RAISED REFLECTIVE PAVEMENT MARKER, REFLECTOR REMOVAL	EACH	178	178		
*	X7830052	RAISED REFLECTIVE PAVEMENT MARKER, REFLECTOR REPLACEMENT	EACH	178	178		

* SPECIALTY ITEM

☐ NON-PART 100% STATE

MODEL: Summary of Quantities [Sheet]
FILE NAME: pw://mb-us-pw.bentley.com:mb-us-pw-03/Documents/Chicago_IL/01_Projects/D1_IDOT_Var_DEservs_PTB208_005/W01 - 198294/3.0 Deliverables/3.3 CADD Data/Sheets/D162T17-sht-soq04.dgn

Michael Baker INTERNATIONAL
200 West Adams Street, Suite 1800, Chicago, IL 60606
Phone: (312) 707-8770 · MBAKERINTL.COM

USER NAME = Connor.Liss	DESIGNED - ZJT	REVISED -	
	DRAWN - MK	REVISED -	
PLOT SCALE = 0.16666633 ' / in.	CHECKED - RBB	REVISED -	
PLOT DATE = 8/9/2024	DATE - 08/09/2024	REVISED -	

STATE OF ILLINOIS
DEPARTMENT OF TRANSPORTATION

SUMMARY OF QUANTITIES
IL 38 (ROOSEVELT ROAD) OVER IL 53

SCALE: Full Size 1 = 1 | SHEET 4 OF 5 SHEETS | STA. TO STA.

F.A.P. RTE.	SECTION	COUNTY	TOTAL SHEETS	SHEET NO.
0347	0347 22 BJ3	DUPAGE	98	6

CONTRACT NO. 62T17

ILLIN OIS | FED .AID PROJEC T

REV-SEP

	CODE NO.	ITEM	UNIT	TOTAL QUANTITY	CONSTRUCTION CODE 80% FED 20% STATE ROADWAY 0006 URBAN	80% FED 20% STATE BRIDGE 0047 SN 022-0163	TRAFFIC SIGNAL 80% FED/20% STATE SAFETY 0021
*	~~X8040104~~	~~TEMPORARY ELECTRIC SERVICE INSTALLATION~~	~~EACH~~	~~1~~			~~1~~ △1
*	X8891009	VIDEO VEHICLE DETECTION SYSTEM, SINGLE APPROACH	EACH	2			2
*	X6310162	TRAFFIC BARRIER TERMINAL, TYPE 1 (MODIFIED)	EACH	1	1		
☐	X5030289	CONCRETE FINISH	L SUM	1			
☐	X5060708	POWER COATING OF BRIDGE FENCE RAILING	L SUM	1			
	X4420486	CLASS D PATCHES, TYPE IV, 6 INCH (SPECIAL)	SQ YD	213	213		
	X8760200	ACCESSIBLE PEDESTRIAN SIGNALS	EACH	4			4

* SPECIALTY ITEM

△1 REVISED SHEET 10/24/2024

☐ 100% DUPAGE COUNTY, 0047

MODEL: Summary of Quantities [Sheet]
FILE NAME: pw://mb-us-pw.bentley.com:mb-us-pw-03/Documents/Chicago_IL/01_Projects/D1_IDOT_Var_DEservs_PTB208_005/W01 - 198294/3.0 Deliverables/3.3 CADD Data/Sheets/D162T17-sht-soq05.dgn

Michael Baker INTERNATIONAL
200 West Adams Street, Suite 1800, Chicago, IL 60606
Phone: (312) 707-8770 · MBAKERINTL.COM

USER NAME = Connor. Liss	DESIGNED - ZJT	REVISED -	
	D RAWN - MK	REVISED -	
PLOT SCALE = 0.16666633 ' / in.	CHECKED - RBB	REVISED -	
PLOT DATE = 8/9/2024	DATE - 02/09/2024	REVISED -	

STATE OF ILLINOIS
DEPARTMENT OF TRANSPORTATION

SUMMARY OF QUANTITIES
IL 38 (ROOSEVELT ROAD) OVER IL 53

SCALE: Full Size 1 = 1 | SHEET 5 OF 5 SHEETS | STA. TO STA.

F.A.P. RTE.	SECTION	COUNTY	TOTAL SHEETS	SHEET NO.
0347	0347 22 BJ3	D UPAGE	98	7
		CONTRACT NO. 62T17		
	ILLINOIS	FED. AID PROJECT		

REV-SEP

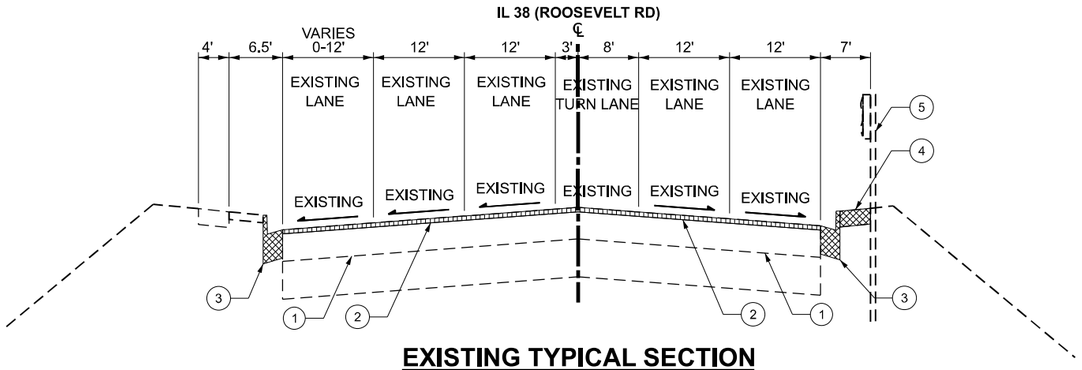

EXISTING TYPICAL SECTION

STA. 700+29.55 TO STA. 700+69.55
BRIDGE AND APPROACH SLAB OMISSION - STA. 700+69.55 TO STA. 702+54.64

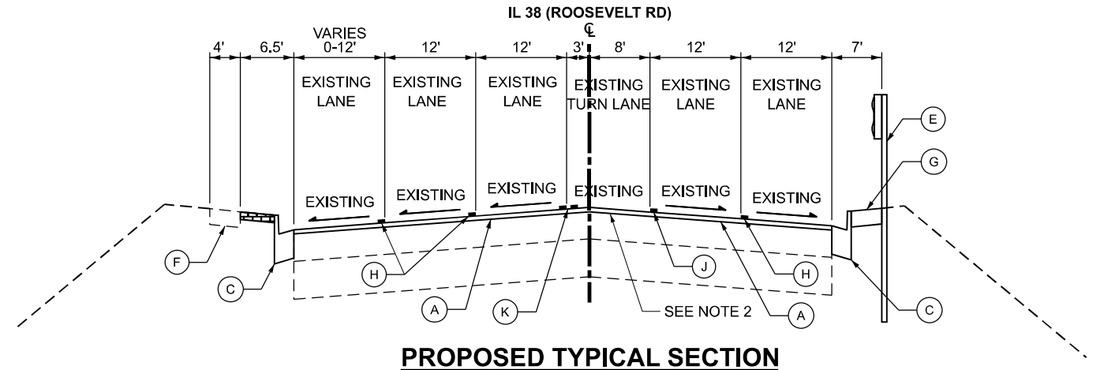

PROPOSED TYPICAL SECTION

STA. 700+29.55 TO STA. 700+69.55
BRIDGE AND APPROACH SLAB OMISSION - STA. 700+69.55 TO STA. 702+54.64

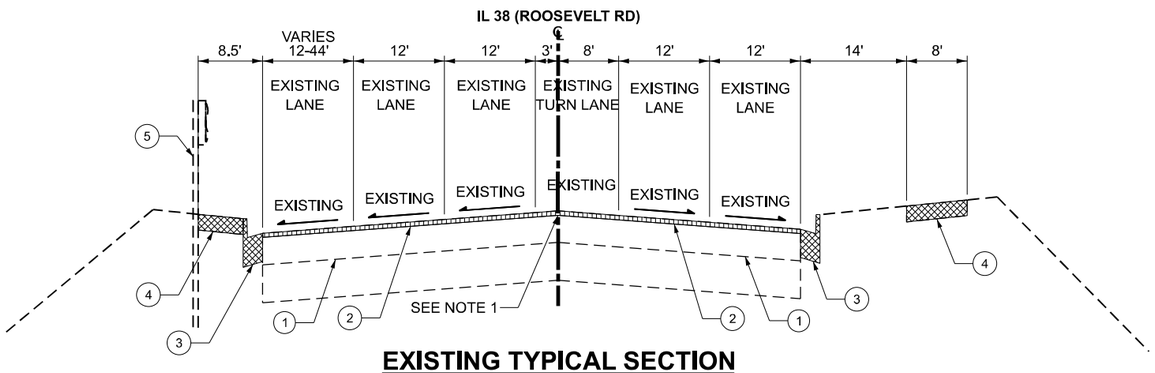

EXISTING TYPICAL SECTION

BAKER HILL DR INTERSECTION - STA. 702+54.64 TO STA. 704+13.11

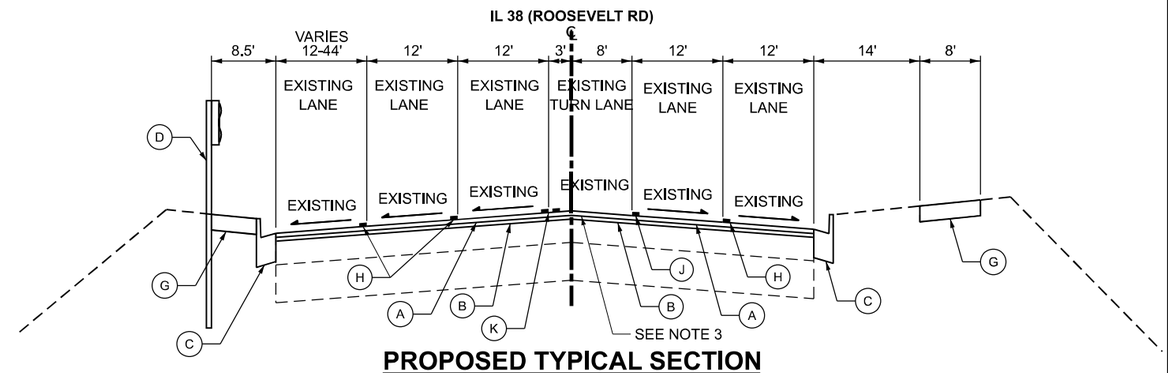

PROPOSED TYPICAL SECTION

BAKER HILL DR INTERSECTION - STA. 702+54.64 TO STA. 704+13.11

EXISTING LEGEND

1. EXISTING PCC PAVEMENT
2. PCC SURFACE REMOVAL
3. COMBINATION CURB AND GUTTER REMOVAL
4. SIDEWALK REMOVAL
5. TRAFFIC BARRIER TERMINAL REMOVAL
6. MEDIAN REMOVAL

PROPOSED LEGEND

- A POLYMERIZED HOT-MIX ASPHALT SURFACE COURSE, STONE MATRIX ASPHALT, MIX "F", N80, 1.75"
- B POLYMERIZED HOT-MIX ASPHALT BINDER COURSE, IL-4.75", N50, 1"
- C COMBINATION CONCRETE CURB AND GUTTER TYPE B-6.24
- D TRAFFIC BARRIER TERMINALS, TYPE 6, SPECIAL
- E TRAFFIC BARRIER TERMINALS, TYPE 6 (MODIFIED)
- F REMOVE AND REINSTALL BRICK PAVER
- G PORTLAND CEMENT CONCRETE SIDEWALK 5 INCH
- H MODIFIED URETHANE PAVEMENT MARKING - LINE 4" - WHITE (10' DASH - 30' SKIP)
- I MODIFIED URETHANE PAVEMENT MARKING - LINE 4" - YELLOW
- J MODIFIED URETHANE PAVEMENT MARKING - LINE 6" - WHITE
- K MODIFIED URETHANE PAVEMENT MARKING - LINE 4" - DOUBLE YELLOW (8" C-C)
- L COMBINATION CONCRETE CURB AND GUTTER TYPE B-6.12
- M CONCRETE MEDIAN SURFACE, 4"

NOTES:
1. EXISTING MEDIAN NOT SHOWN FROM STATION 703+84.00 TO STATION 704+13.00.
2. LONGITUDINAL JOINT SEALANT SHALL BE PLACED UNDER THE HMA SURFACE COURSE MIX.
3. LONGITUDINAL JOINT SEALANT SHALL BE PLACED ON P HMA BC IL-4.75 N50.

MODEL: TS-1 [Sheet]
FILE NAME: pw://mb-us-pw.bentley.com:mb-us-pw-03/Documents/Chicago_IL/01_Projects/D1_IDOT_Var_DEservs_PTB208_005/W01 - 198294.3.0 Deliverables/3.3 CADD Data/Sheets/D162117-eht-typical.dgn

Michael Baker INTERNATIONAL
200 West Adams Street, Suite 1800, Chicago, IL 60606
Phone: (312) 707-8770 · MBAKERINTL.COM

USER NAME = Winson.Teng	DESIGNED - ZJT	REVISED -	
	DRAWN - JR	REVISED -	
PLOT SCALE = 0.16666633 ' / in.	CHECKED - RBB	REVISED -	
PLOT DATE = 9/20/2024	DATE - 08/09/2024	REVISED -	

STATE OF ILLINOIS
DEPARTMENT OF TRANSPORTATION

TYPICAL SECTIONS
IL 38 (ROOSEVELT ROAD) OVER IL 53

SCALE: NTS | SHEET 1 OF 2 SHEETS | STA. TO STA.

F.A.P. RTE.	SECTION	COUNTY	TOTAL SHEETS	SHEET NO.
0347	0347 22 BJ3	DUPAGE	98	8
		CONTRACT NO. 62T17		
		ILLINOIS	FED. AID PROJECT	

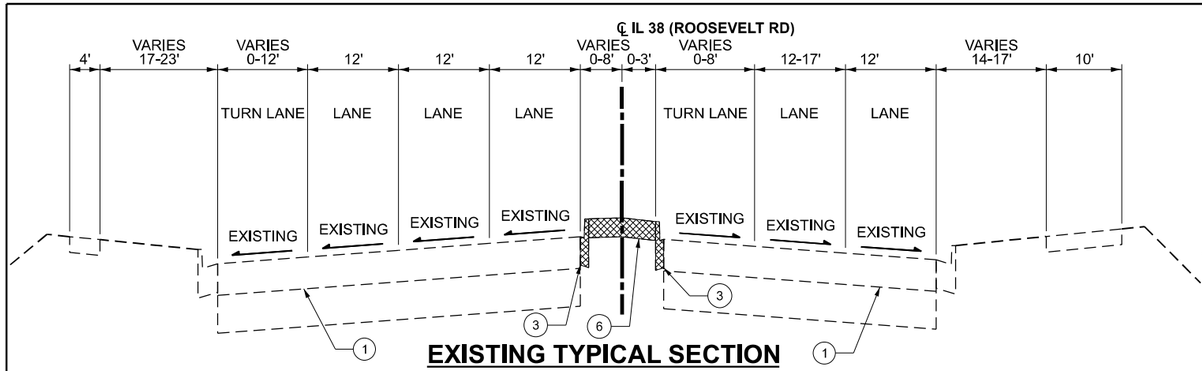

EXISTING TYPICAL SECTION

STA. 704+13.11 TO STA. 707+86.81

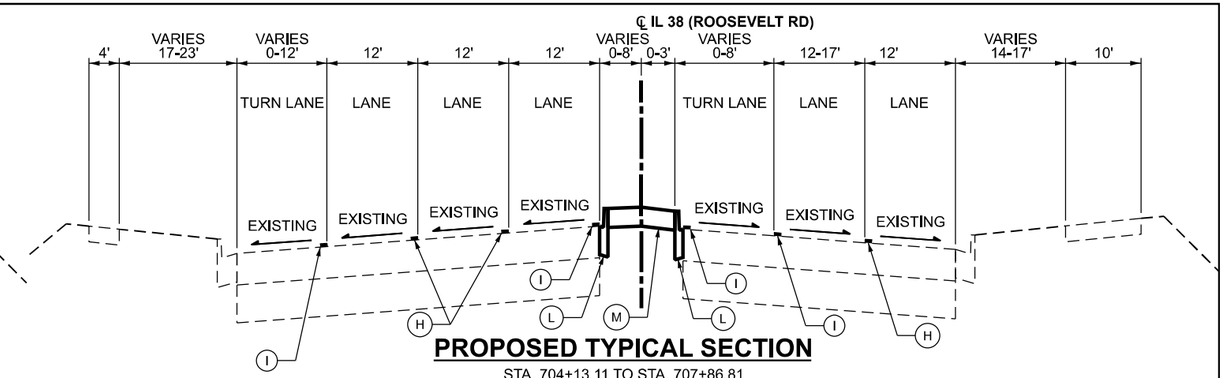

PROPOSED TYPICAL SECTION

STA. 704+13.11 TO STA. 707+86.81

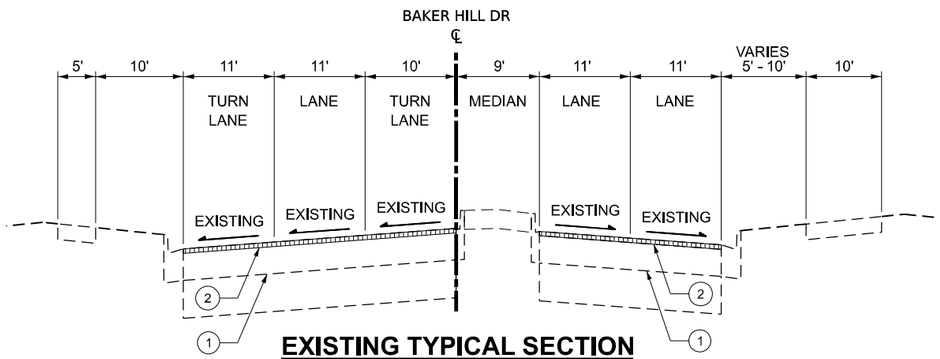

EXISTING TYPICAL SECTION

BAKER HILL DR

STA. 50+66.48 TO STA. 50+98.43

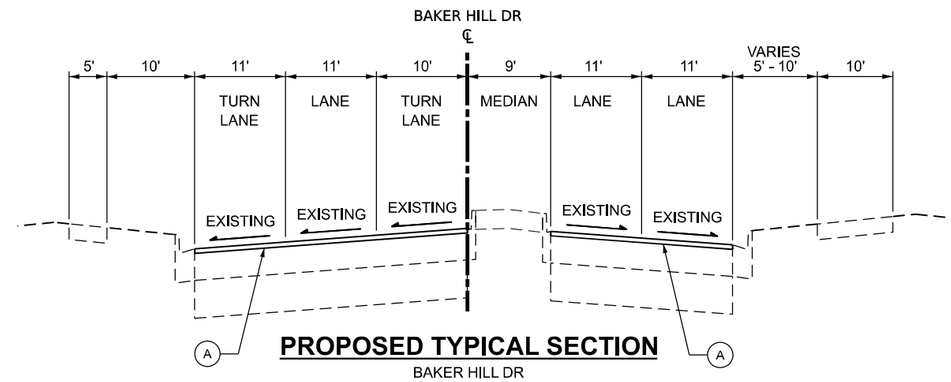

PROPOSED TYPICAL SECTION

BAKER HILL DR

STA. 50+66.48 TO STA. 50+98.43

EXISTING LEGEND

1. EXISTING PCC PAVEMENT
2. PCC SURFACE REMOVAL
3. COMBINATION CURB AND GUTTER REMOVAL
4. SIDEWALK REMOVAL
5. TRAFFIC BARRIER TERMINAL REMOVAL
6. MEDIAN REMOVAL

PROPOSED LEGEND

- (A) POLYMERIZED HOT-MIX ASPHALT SURFACE COURSE, STONE MATRIX ASPHALT, MIX "F", N80, 1.75"
- (B) POLYMERIZED HOT-MIX ASPHALT BINDER COURSE, IL-4.75", N50, 1"
- (C) COMBINATION CONCRETE CURB AND GUTTER TYPE B-6.24
- (D) TRAFFIC BARRIER TERMINALS, TYPE 6, SPECIAL
- (E) TRAFFIC BARRIER TERMINALS, TYPE 6 (MODIFIED)
- (F) REMOVE AND REINSTALL BRICK PAVER
- (G) PORTLAND CEMENT CONCRETE SIDEWALK 5 INCH
- (H) MODIFIED URETHANE PAVEMENT MARKING - LINE 4" - WHITE (10' DASH - 30' SKIP)
- (I) MODIFIED URETHANE PAVEMENT MARKING - LINE 4" - YELLOW
- (J) MODIFIED URETHANE PAVEMENT MARKING - LINE 6" - WHITE
- (K) MODIFIED URETHANE PAVEMENT MARKING - LINE 4" - DOUBLE YELLOW (8" C-C)
- (L) COMBINATION CONCRETE CURB AND GUTTER TYPE B-6.12
- (M) CONCRETE MEDIAN SURFACE, 4"

HOT-MIX ASPHALT MIXTURE REQUIREMENTS		
MIXTURE TYPE	AIR VOIDS @ NDES	QMP
PAVEMENT RESURFACING		
POLYMERIZED HOT-MIX ASPHALT SURFACE COURSE, STONE MATRIX ASPHALT, 9.5, MIX "F", N80	3.5% @ 80 GYR.	QC/QA
POLYMERIZED HOT-MIX ASPHALT BINDER COURSE, IL-4.75", N50	3.5% @ 50 GYR.	QC/QA
TEMPORARY PAVEMENT		
HOT-MIX ASPHALT SURFACE COURSE, MIX "D", IL-9.5, N70, 2"	4% @ 70 GYR.	QC/QA
HOT-MIX ASPHALT BINDER COURSE, IL-19.0, N70, 8"	4% @ 70 GYR.	QC/QA
TEMPORARY PAVEMENT (VARIABLE DEPTH)		
HOT-MIX ASPHALT SURFACE COURSE, MIX "D", IL-9.5, N70	4% @ 70 GYR.	QC/QA
CLASS D PATCHES 6" (SPECIAL)		
HMA SURFACE COURSE, MIX "D", IL-9.5, N70, (TOP 2")	4% @ 70 GYR.	QC/QA
HMA BINDER COURSE IL-19.0, N70	4% @ 70 GYR.	QC/QA
HMA STABILIZATION 6" AT STEEL PLATE BEAM GUARDRAIL		
HOT-MIX ASPHALT BINDER COURSE, IL-19.0, N70; 6"	4% @ 70 GYR.	QC/QA
QMP DESIGNATIONS: QUALITY CONTROL/QUALITY ASSURANCE (QC/QA); QUALITY CONTROL FOR PERFORMANCE (QCP)		

NOTES FOR HMA MIXTURE REQUIREMENTS

1. THE UNIT WEIGHT USED TO CALCULATE ALL HOT-MIX ASPHALT SURFACE MIXTURE QUANITITES IS 112 LBS/SQ YD/IN.
2. THE AC TYPE FOR POLYMERIZED HMA MIXES SHALL BE "SBS/SBR PG 76-22" AND FOR NON-POLYMERIZED HMA THE "AC TYPE" SHALL BE "PG 64-22", UNLESS MODIFIED BY RECLAIMED MATERIALS SPECIFICATIONS.
3. PC CONCRETE TEMPORARY PAVEMENT SHALL CONSIST OF CLASS PV CONCRETE MEETING THE REQUIRMENTS OF ART. 1020 OF THE STANDARD SPECIFICATIONS, PCC PAVEMENT 8" THICK. TEMPORARY PCC PAVEMENT DOES NOT REQUIRE DOWEL BARS.

Michael Baker INTERNATIONAL
200 West Adams Street, Suite 1800, Chicago, IL 60606
Phone: (312) 707-8770 • MBAKERINTL.COM

USER NAME = Winson.Teng	DESIGNED - ZJT	REVISED -	
	DRAWN - JR	REVISED -	
PLOT SCALE = 0.16666633 ' / in.	CHECKED - RBB	REVISED -	
PLOT DATE = 9/20/2024	DATE - 08/09/2024	REVISED -	

STATE OF ILLINOIS
DEPARTMENT OF TRANSPORTATION

TYPICAL SECTIONS
IL 38 (ROOSEVELT ROAD) OVER IL 53

SCALE: NTS | SHEET 1 OF 2 SHEETS | STA. | TO STA.

F.A.P RTE.	SECTION	COUNTY	TOTAL SHEETS	SHEET NO.
0347	0347 22 BJ3	DUPAGE	98	9
		CONTRACT NO. 62T17		
		ILLINOIS	FED. AID PROJECT	

MODEL: TS-1 [Sheet]
FILE NAME: pw://mb-us-pw.bentley.com:mb-us-pw-03/Documents/Chicago_IL/01_Projects/D1_IDOT_Var_DEserv's_PTB208_005/W01 - 198294.3.0 Deliverables/3.3 CADD Data/Sheets/D162117-eht-Typical 2.dgn

MOT GENERAL NOTES

1. TRAFFIC CONDITIONS, CRASHES, AND OTHER UNFORSEEN EMERGENCY CONDITIONS MAY REQUIRE THE ENGINEER TO RESTRICT, MODIFY, OR REMOVE LANE CLOSURES OR CHANNELIZATION SHOWN ON THE PLANS. THE CONTRACTOR SHALL MAKE THE NECESSARY ADJUSEMENTS AS DIRECTED BY THE ENGINEER WITHOUT DELAY. COMPLIANCE WITH THIS REQUIREMENT SHALL BE CONSIDERED INCLUDED IN THE CONTRACT UNIT PRICE OF TRAFFIC CONTROL AND PROTECTION, (SPECIAL).
2. THE MAINTENANCE OF TRAFFIC PLANS SHALL SERVE AS A GUIDE FOR THE SAFE DIVERSION OF TRAFFIC DURING EXECUTION OF THE CONTRACT. THE CONTRACTOR MAY MODIFY THE MAINTENANCE OF TRAFFIC PLANS TO MEET CONSTRUCTION NEEDS, BUT NOT AT THE EXPENSE OF PUBLIC SAFETY OR CONVENIENCE. ANY CHANGES TO THE TRAFFIC CONTROL SHALL BE SUBMITTED TO THE ENGINEER FOR REVIEW AND APPROVAL.
3. ALL TEMPORARY PAVEMENT MARKINGS SHALL BE PAVEMENT MARKING TAPE, TYPE IV.
4. THE CONTRACTOR SHALL REMOVE OR COVER ALL EXISTING SIGNS THAT CONFLICT WITH OR DO NOT APPLY TO THE REVISED TRAFFIC PATTERNS AND SHALL RESTORE THE SIGNS AT THE END OF CONSTRUCTION AS DIRECTED BY THE ENGINEER. THIS WORK SHALL BE CONSIDERED INCLUDED IN THE TRAFFIC CONTROL AND PROTECTION, (SPECIAL).
5. PEDESTRIAN ACCESS SHALL BE MAINTAINED AT ALL TIMES. ANY TEMPORARY SIGNAGE, TEMPORARY ACCESS PATHS, OR OTHER ITEMS NEEDED TO REROUTE PEDESTRIAN TRAFFIC AROUND WORK ZONES SHALL BE APPROVED BY THE ENGINEER. THE COST OF THIS WORK SHALL BE CONSIDERED INCLUDED IN THE CONTRACT UNIT PRICE OF TRAFFIC CONTROL AND PROTECTION (SPECIAL).
6. THE CONTRACTOR SHALL CONTACT KALPANA KANNAN-HOSADURGA, THE DISTRICT ONE TRAFFIC CONTROL SUPERVISOR, AT KALPANA.KANNAN-HOSADURGA@ILLINOIS.GOV A MINIMUM OF 72 HOURS IN ADVANCE OF BEGINNING WORK.
7. CHANGEABLE MESSAGE SIGNS SHALL BE INSTALLED TWO WEEKS PRIOR TO ALL TRAFFIC STAGE CHANGES ON EACH APPROACH OF THE EFFECTED ROADWAY TO WARN MOTORISTS OF THE UPCOMING EVENT. THE SIGN MESSAGES SHALL BE REVISED TWO WEEKS THEREAFTER WITH MESSAGES WARNING TRAFFIC OF POTENTIAL TRAFFIC DELAYS, QUEUING AND/OR WITH MESSAGES NOTIFYING TRAFFIC TO USE ALTERNATE ROUTES. THE SIGN LOCATIONS AND MESSAGES SHALL BE DETERMINED BY THE ENGINEER.
8. ALL EXISTING LANE LINE PAVEMENT MARKINGS AND RAISED REFLECTIVE PAVEMENT MARKER REFLECTORS LOCATED WITHIN TEMPORARY LANE CLOSURE TAPERS, LANE SHIFT TAPERS OR IN LOCATIONS THAT CONFLICT WITH THE TEMPORARY PAVEMENT MARKING TAPE USED FOR STAGING SHALL BE REMOVED VIA WATER BLASTING WITH VACUUM RECOVERY IF THE STAGING WILL REMAIN IN PLACE FOR MORE THAN 14 DAYS. THE EXISTING PAVEMENT MARKINGS AND RAISED REFLECTIVE PAVEMENT MARKER REFLECTORS THAT WERE REMOVED SHALL BE RESTORED IN KIND AFTER THE COMPLETION OF THE STAGING.
9. TEMPORARY INFORMATION SIGNS ON TEMPORARY SUPPORTS SHALL BE PROVIDED FOR ALL COMMERCIAL DRIVEWAYS THAT ARE LOCATED WITHIN A WORK AREA. THIS WORK SHALL BE PAID FOR PER DISTRICT 1 DETAIL TC-26. THESE SIGNS SHALL BE RELOCATED AS REQUIRED FOR EACH CONSTRUCTION STAGE AND SHALL BE PLACED AS DIRECTED BY THE ENGINEER. THIS SIGN RELOCATION WORK WILL NOT BE PAID FOR SEPARATELY AND SHALL BE INCLUDED IN THE CONTRACT UNIT PRICE PER SQUARE FOOT FOR TEMPORARY INFORMATION SIGNING.

1

SUGGESTED STAGING AND MAINTENANCE OF TRAFFIC

IL-38 & IL-53 PRE-STAGE

MAINTENANCE OF TRAFFIC:

1. CLOSE LANES AS NEEDED PER IDOT DAYTIME LANE CLOSURE TRAFFIC CONTROL STANDARDS

CONSTRUCTION:

1. INSTALL TEMPORARY TRAFFIC SIGNALS AT IL-38 AND BAKER HILL DR.
2. REPLACE RAISED MEDIAN ALONG EAST LEG OF IL-38 WITH TEMPORARY PAVEMENT
3. REMOVE CONFLICTING EXISTING PAVEMENT MARKINGS AND COVER SIGNS AS DIRECTED BY THE ENGINEER.
4. INSTALL PROTECTIVE SHIELD UNDER BRIDGE.

IL-38 STAGE 1

MAINTENANCE OF TRAFFIC:

1. CLOSE SOUTH SIDEWALK USING STANDARD 701801.
2. IL38-WB: REDUCE THROUGH LANES FROM 3 TO 2 THROUGH WORK AREA AS SHOWN IN PLANS
3. IL38-WB: MAINTAIN RIGHT TURN LANE
4. IL38-EB: REDUCE THROUGH LANES FROM 2 TO 1 THROUGH WORK AREA AS SHOWN IN PLANS
5. BUNKER HILL: CLOSE 2ND LEFT TURN LANE.
6. PEDS N-S: CLOSE WEST CROSSWALK, SHIFT PEDS TO TEMP CROSSWALK ALONG EAST APPROACH
   PEDS E-W: MAINTAIN CROSSWALK ACROSS BAKER HILL DR

CONSTRUCTION:

1. REPLACE BRIDGE JOINTS AND REPAIR APPROACH SLABS ON SOUTH THIRD OF BRIDGE
2. REMOVE AND REPLACE GUARDRAIL TERMINAL AT SOUTHWEST CORNER OF BRIDGE FOR JOINT REPLACEMENT.
3. SCARIFY BRIDGE DECK ON SOUTH THIRD OF BRIDGE AND APPROACH SLABS, AND PLACE LATEX CONCRETE OVERLAY ON BRIDGE AND BRIDGE APPORACH SLABS.
4. REMOVE AND REPLACE COMBINATION CONCRETE CURB AND GUTTER ON SOUTH EDGE TO FINAL ELEVATION ACCORDING TO PROPOSED OVERLAY TRANSITION DETAIL. (DEFER CURB WORK AT TEMP EAST CROSSWALK TO POST STAGE).
5. AT SOUTH THIRD OF BRIDGE, CONSTRUCT BUTT JOINT AND PLACE TEMPORARY PAVEMENT (VARIABLE DEPTH) PER THE PAVEMENT OVERLAY DETAIL.
6. REMOVE AND REPLACE SIDEWALKS AT SOUTHWEST QUADRANT OF IL-38 AND BAKER HILL DR INTERSECTION.
7. COMPLETE PATCHING THROUGH INTERSECTION.

IL-38 STAGE 2

MAINTENANCE OF TRAFFIC:

1. OPEN SOUTH SIDEWALK
2. REMOVE CONFLICTING EXISTING PAVEMENT MARKINGS.
3. IL38-WB: MAINTAIN LANE REDUCTION FROM 3 TO 2 THROUGH WORK AREA AS SHOWN IN PLANS
4. IL38-WB: MAINTAIN RIGHT TURN LANE
5. IL38-EB: MAINTAIN LANE REDUCTION FROM 2 TO 1, AND SHIFT LANES THROUGH WORK AREA AS SHOWN IN PLANS
6. BAKER HILL DR: CLOSE EXISTING RIGHT TURN LANE, SHIFT RIGHT TURN TO CENTER LANE.
7. PEDS N-S: MAINTAIN CLOSED WEST CROSSWALK, MAINTAIN PEDS ON TEMP CROSSWALK ALONG EAST APPROACH
8. PEDS E-W: MAINTAIN CROSSWALK ACROSS BAKER HILL DR

CONSTRUCTION:

1. REPLACE BRIDGE JOINTS AND REPAIR APPROACH SLABS ON CENTER THIRD OF BRIDGE
2. SCARIFY BRIDGE DECK ON CENTER THIRD OF BRIDGE AND APPROACH SLAB, AND PLACE LATEX CONCRETE OVERLAY ON BRIDGE AND BRIDGE APPROACH SLABS.
3. AT CENTER THIRD OF BRIDGE, CONSTRUCT BUTT JOINT AND PLACE TEMPORARY PAVEMENT (VARIABLE DEPTH) PER THE PAVEMENT OVERLAY DETAIL.

IL-38 STAGE 3

MAINTENANCE OF TRAFFIC:

1. CLOSE NORTH SIDEWALK USING STANDARD 701801.
2. REMOVE CONFLICTING EXISTING PAVEMENT MARKINGS.
3. IL38-WB: MAINTAIN LANE REDUCTION FROM 3 TO 2, SHIFT LANES THROUGH WORK AREA AS SHOWN IN PLANS
4. IL38-WB: SHIFT RIGHT TURN LANE AWAY FROM NE CORNER OF IL38 AND BAKER HILL DR INTERSECTION AS SHOWN IN THE PLANS
5. IL38-EB: MAINTAIN LANE REDUCTION FROM 2 TO 1, AND SHIFT LANES THROUGH WORK AREA AS SHOWN IN PLANS
6. BAKER HILL DR: MAINTAIN RIGHT TURN LANE SHIFTED TO CENTER LANE. CLOSE RIGHT NB LANE (IN COORDINATION WITH IL38 EB RIGHT).
7. PEDS N-S: MAINTAIN CLOSED WEST CROSSWALK, MAINTAIN PEDS ON TEMP CROSSWALK ALONG EAST APPROACH
8. PEDS E-W: MAINTAIN CROSSWALK ACROSS BUNKER HILL. SHIFT TEMPORARY ACCESS TO REPLACE RAMPS AS NEEDED.

CONSTRUCTION:

1. REPLACE THE BRIDGE JOINTS AND REPAIR THE BRIDGE APPROACH SLABS ON THE NORTH THIRD OF THE BRIDGE.
2. SCARIFY BRIDGE DECK ON NORTH THIRD OF BRIDGE AND APPROACH SLABS, AND PLACE LATEX CONCRETE OVERLAY ON BRIDGE AND BRIDGE APPROACH SLABS.
3. REMOVE AND REPLACE COMBINATION CONCRETE CURB AND GUTTER ON NORTH CORNER TO FINAL ELEVATION ACCORDING TO PROPOSED OVERLAY TRANSITION DETAIL.
4. AT NORTH SIDE OF BRIDGE, CONSTRUCT BUTT JOINT AND PLACE EITHER HMA PAVEMENT OVERLAY OR TEMPORARY PAVEMENT (VARIABLE DEPTH). DEFER HMA PAVEMENT OVERLAY TO IL-38 POST STAGE A IF TEMPORARY PAVEMENT (VARIABLE DEPTH) IS CONSTRUCTED.
5. REMOVE AND REPLACE TRAFFIC BARRIER TERMINAL ON NORTHEAST CORNER OF BRIDGE.
6. REMOVE AND REPLACE SIDEWALK IN NW CORNER OF IL38 AND BAKER HILL DR INTERSECTION.
7. COMPLETE PATCHING THROUGH INTERSECTION.
8. COMPLETE WORK IN NORTHEAST CORNER OF INTERSECTION.

IL-38 POST-STAGE 3

MAINTENANCE OF TRAFFIC:

1. RETURN TRAFFIC TO ORIGINAL LANE CONFIGURATION.
2. UTILIZE DAYTIME LANE CLOSURES PER IDOT TRAFFIC CONTROL STANDARDS.

CONSTRUCTION:

1. REMOVE TEMPORARY PAVEMENT.
2. REMOVE BRIDGE PROTECTIVE SHIELD.
3. CONSTRUCT PROPOSED CURB AND GUTTER AND MEDIAN SURFACE FOR IL-38 MEDIAN.
4. REMOVE TEMPORARY PAVEMENT (VARIABLE DEPTH) AND CONSTRUCT BUTT JOINTS AND HMA PAVEMENT OVERLAY.
5. INSTALL FINAL PAVEMENT MARKINGS.

IL-53 COMPLETE INDEPENDENTLY DURING IL-38 STAGES

MAINTENANCE OF TRAFFIC:

1. CLOSE OUTSIDE LANES UNDER BRIDGE AS SHOWN IN PLANS.

CONSTRUCTION:

1. REPAIR EAST ABUTMENT AS SHOWN IN PLANS.
2. REPAIR WEST ABUTMENT AS SHOWN IN PLANS.

MAINTENANCE OF TRAFFIC:

1. USE STANDARD701606 FOR DAILY LANE CLOSURES ON THE OUTISIDE SOUTHBOUND LANE.

CONSTRUCTION:

1. PERFORM WALL DRAINAGE IMPROVEMENTS TO RETAINING WALL.

ADVANCE WIDTH RESTRICTION SIGNING MAP

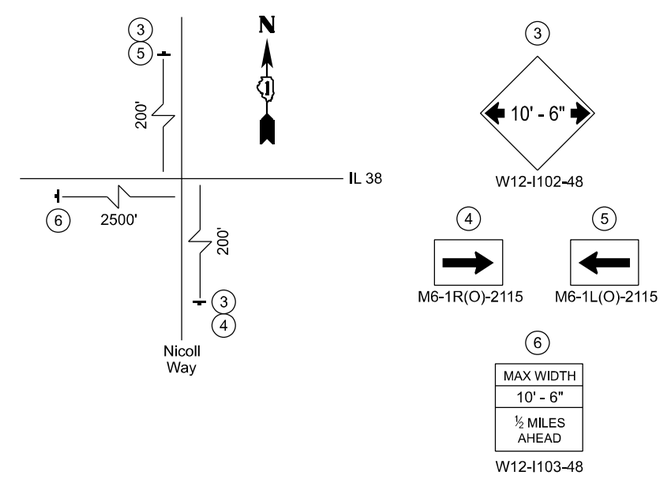

1 REVISED SHEET 10/24/2024

MODEL: MOT_NOTES [Sheet]
FILE NAME: pw://mb-us-pw.bentley.com:mb-us-pw-03/Documents/Chicago_IL/01_Projects/D1_IDOT_Var_DEservs_PTB208_005/W01 - 1982943.0 Deliverables/3.3 CADD Data/Sheets/D162117-sht-MOTnotes.dgn

Michael Baker INTERNATIONAL
200 West Adams Street, Suite 1800, Chicago, IL 60606
Phone: (312) 707-6770 - MBAKERINTL.COM

USER NAME = Zach.Tanner	DESIGNED - ZJT	REVISED - 10/21/2024 1	STATE OF ILLINOIS DEPARTMENT OF TRANSPORTATION	MAINTENANCE OF TRAFFIC-NOTES & SEQUENCE OF CONSTRUCTION IL 38 (ROOSEVELT ROAD) OVER IL 53	F.A.P. RTE.	SECTION	COUNTY	TOTAL SHEETS	SHEET NO.
	DRAWN - JR	REVISED -			0347	0347 22 BJ3	DUPAGE	98	10
PLOT SCALE = 0.16666633 ' / in.	CHECKED - RBB	REVISED -					CONTRACT NO. 62T17		
PLOT DATE = 10/21/2024	DATE - 08/09/2024	REVISED -		SCALE: Full Size 1 = 1 SHEET 1 OF 1 SHEETS STA. TO STA.		ILLINOIS	FED. AID PROJECT		

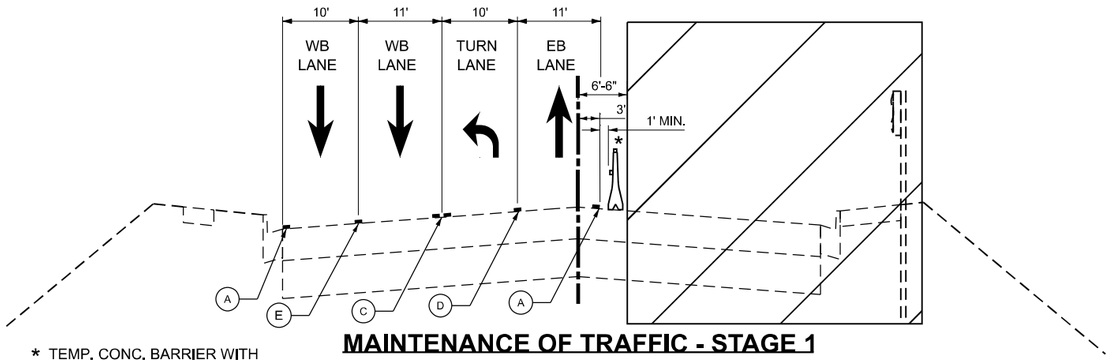

MAINTENANCE OF TRAFFIC - STAGE 1

IL 38 (ROOSEVELT ROAD) WEST OF IL 53

* TEMP. CONC. BARRIER WITH MONODIRECTIONAL CRYSTAL TYPE C REFLECTORS PER STDS. 704001 AND 782006.

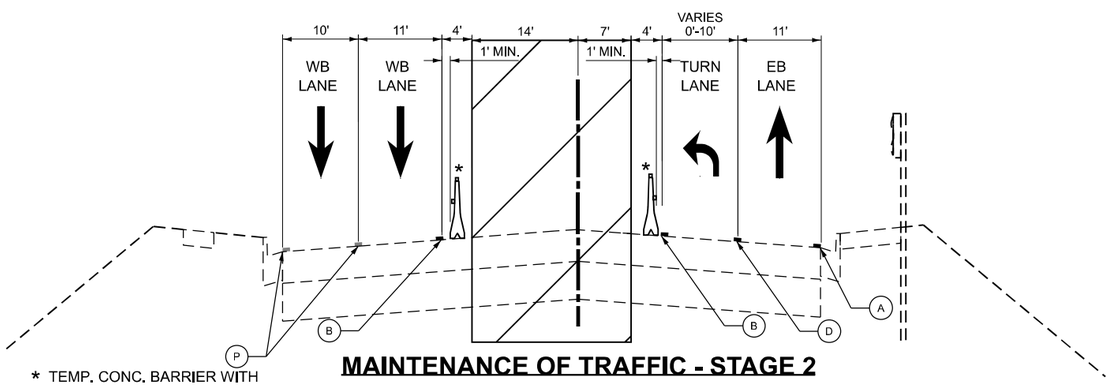

MAINTENANCE OF TRAFFIC - STAGE 2

IL 38 (ROOSEVELT ROAD) WEST OF IL 53

* TEMP. CONC. BARRIER WITH MONODIRECTIONAL AMBER TYPE C REFLECTORS PER STDS. 704001 AND 782006.

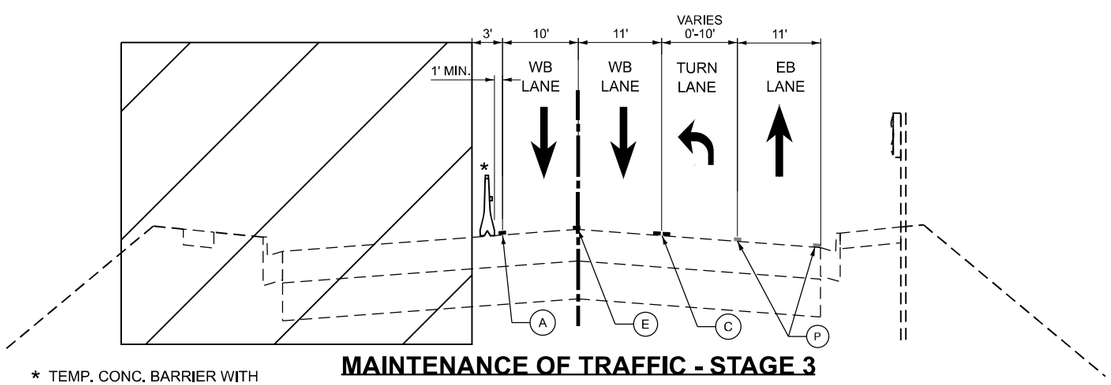

MAINTENANCE OF TRAFFIC - STAGE 3

IL 38 (ROOSEVELT ROAD) WEST OF IL 53

* TEMP. CONC. BARRIER WITH MONODIRECTIONAL CRYSTAL TYPE C REFLECTORS PER

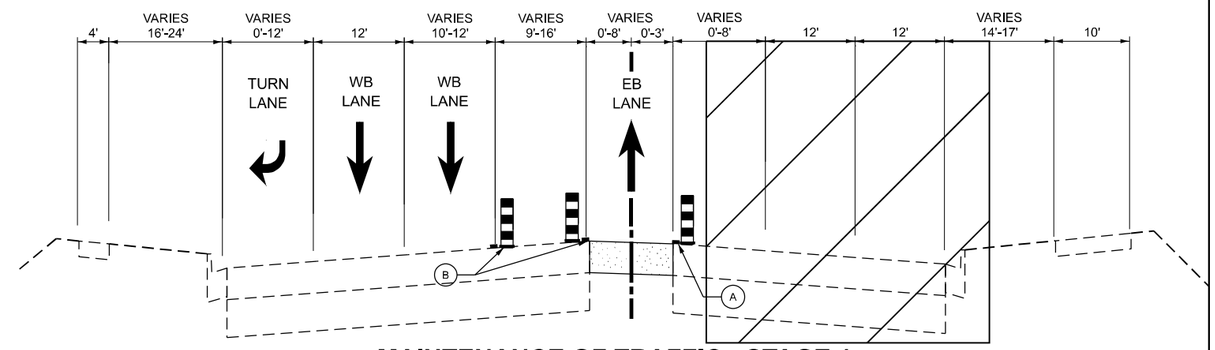

MAINTENANCE OF TRAFFIC - STAGE 1

IL 38 (ROOSEVELT ROAD) EAST OF IL 53

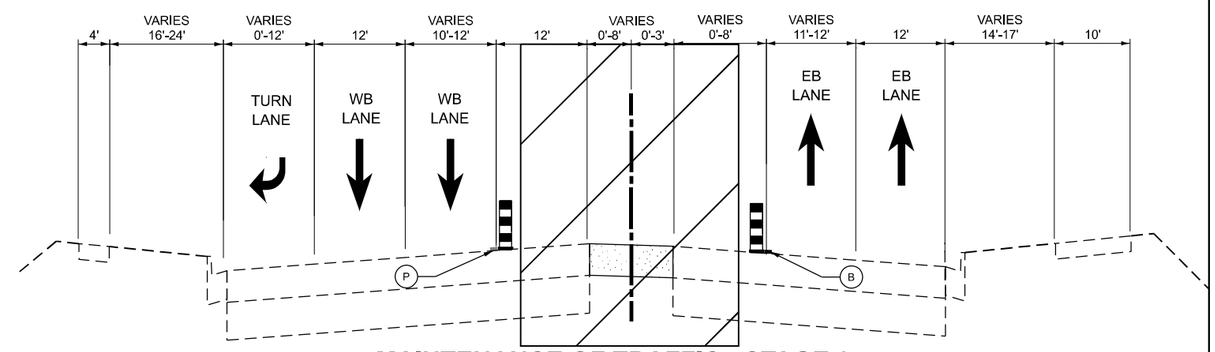

MAINTENANCE OF TRAFFIC - STAGE 2

IL 38 (ROOSEVELT ROAD) EAST OF IL 53

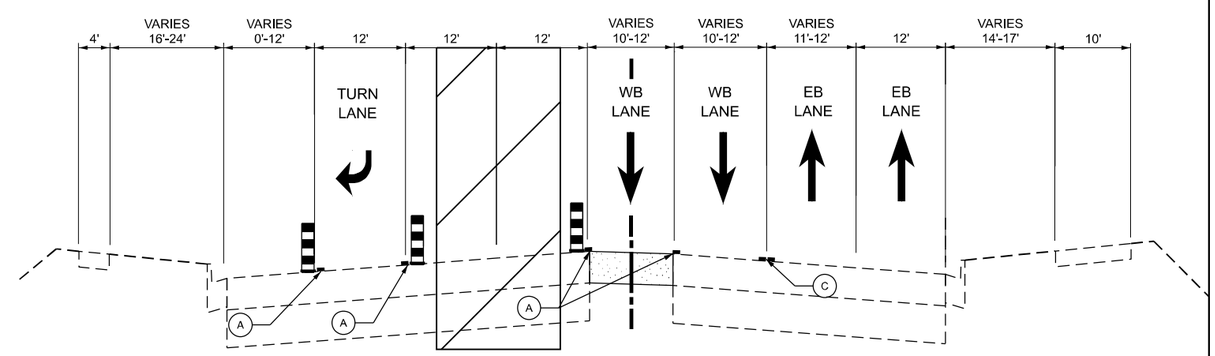

MAINTENANCE OF TRAFFIC - STAGE 3

IL 38 (ROOSEVELT ROAD) EAST OF IL 53

LEGEND

- (A) TEMPORARY PAVEMENT MARKING - LINE 4" - TYPE 4 TAPE (WHITE) (SOLID)
- (B) TEMPORARY PAVEMENT MARKING - LINE 4" - TYPE 4 TAPE (YELLOW) (SOLID)
- (C) TEMPORARY PAVEMENT MARKING - LINE 4" - TYPE 4 TAPE (DOUBLE YELLOW) (@ 11" C-C)
- (D) TEMPORARY PAVEMENT MARKING - LINE 6" -TYPE 6 TAPE (WHITE) (SOLID)
- (E) TEMPORARY PAVEMENT MARKING - LINE 4" - TYPE 4 TAPE (WHITE) (10' DASH, 30' SKIP)
- (P) PLACED IN PREVIOUS STAGE
- DRUM BARRICADE
- TEMPORARY CONCRETE BARRIER
- TEMPORARY PAVEMENT

Michael Baker INTERNATIONAL
200 West Adams Street, Suite 1800, Chicago, IL 60606
Phone: (312) 707-8770 • MBAKERINTL.COM

USER NAME = Connor.Liss	DESIGNED - ZJT	REVISED -	
	DRAWN - YK	REVISED -	
PLOT SCALE = 0.16666633 ' / in.	CHECKED - RBB	REVISED -	
PLOT DATE = 8/9/2024	DATE - 08/09/2024	REVISED -	

STATE OF ILLINOIS
DEPARTMENT OF TRANSPORTATION

MAINTENANCE OF TRAFFIC-TYPICAL SECTIONS
IL 38 (ROOSEVELT ROAD) OVER IL 53

SCALE: NTS | SHEET 1 OF 2 SHEETS | STA. TO STA.

F.A.P. RTE.	SECTION	COUNTY	TOTAL SHEETS	SHEET NO.
0347	0347 22 BJ3	DUPAGE	98	11
		CONTRACT NO. 62T17		
		ILLINOIS	FED. AID PROJECT	

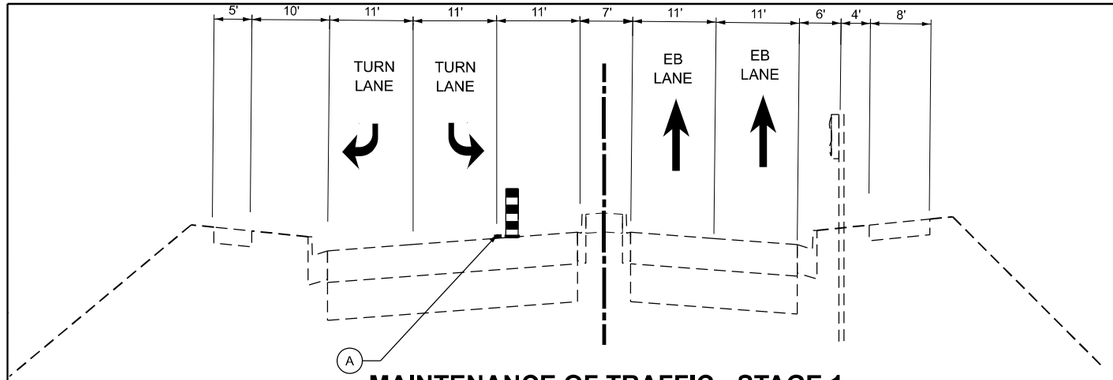

MAINTENANCE OF TRAFFIC - STAGE 1

BAKER HILL DRIVE

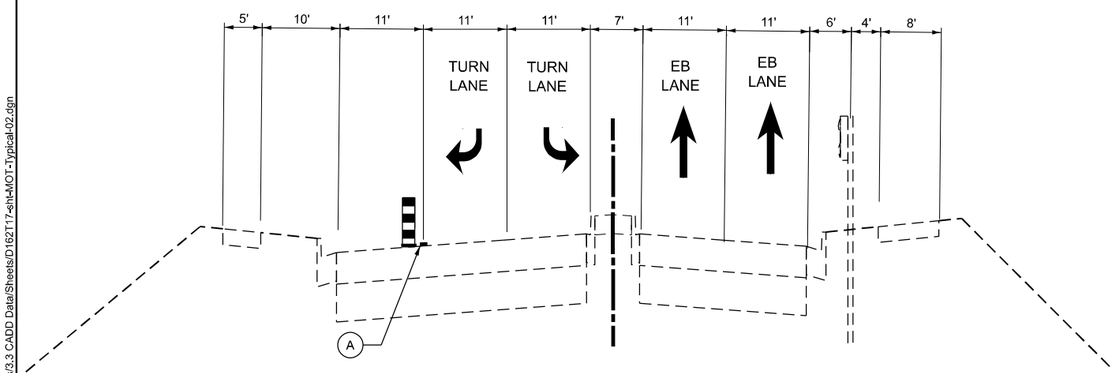

MAINTENANCE OF TRAFFIC - STAGE 2

BAKER HILL DRIVE

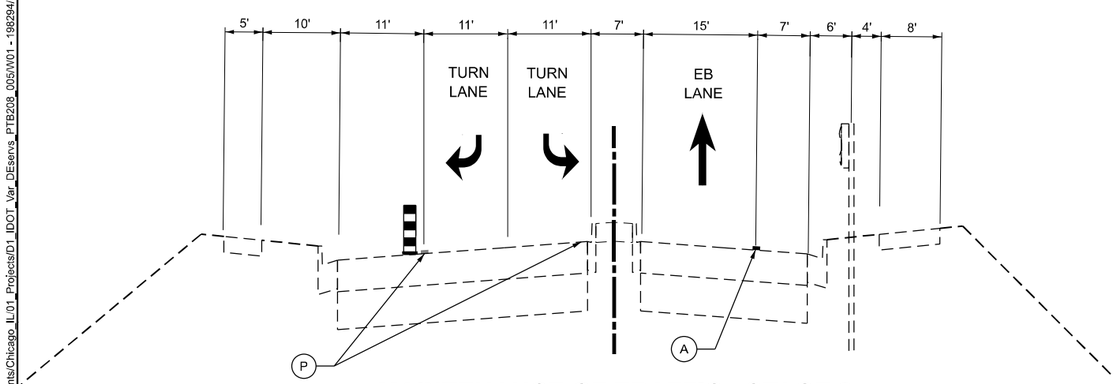

MAINTENANCE OF TRAFFIC - STAGE 3

BAKER HILL DRIVE

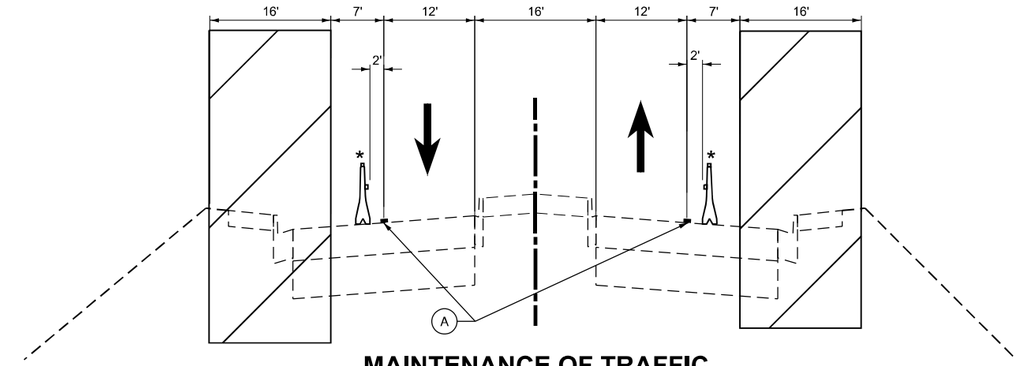

* TEMP. CONC. BARRIER WITH MONODIRECTIONAL CRYSTAL TYPE C REFLECTORS PER STDS. 704001 AND 782006.

MAINTENANCE OF TRAFFIC

IL 53
TEMP CONCRETE BARRIER - STA 118+93.00 TO STA 120+55.00 (NB)
TEMP CONCRETE BARRIER - STA 119+45.00 TO STA 121+06.00 (SB)

LEGEND

- (A) TEMPORARY PAVEMENT MARKING - LINE 4" - TYPE 4 TAPE (WHITE) (SOLID)
- (B) TEMPORARY PAVEMENT MARKING - LINE 4" - TYPE 4 TAPE (YELLOW) (SOLID)
- (C) TEMPORARY PAVEMENT MARKING - LINE 4" - TYPE 4 TAPE (DOUBLE YELLOW) (@ 11" C-C)
- (D) TEMPORARY PAVEMENT MARKING - LINE 6" -TYPE 6 TAPE (WHITE) (SOLID)
- (E) TEMPORARY PAVEMENT MARKING - LINE 4" - TYPE 4 TAPE (WHITE) (10' DASH, 30' SKIP)
- (P) PLACED IN PREVIOUS STAGE
- DRUM BARRICADE
- TEMPORARY CONCRETE BARRIER
- TEMPORARY PAVEMENT

MODEL: MOT TS-2 [Sheet]
FILE NAME: pw://mb-us-pw.bentley.com:mb-us-pw-03/Documents/Chicago_IL/01_Projects/D1_IDOT_Var_DEservs_PTB208_005/W01 - 198294/3.0 Deliverables/3.3 CADD Data/Sheets/D162117-eIH-MOT-Typical-02.dgn

Michael Baker INTERNATIONAL
200 West Adams Street, Suite 1800, Chicago, IL 60606
Phone: (312) 707-8770 · MBAKERINTL.COM

USER NAME = Connor.Liss	DESIGNED - ZJT	REVISED -	
	DRAWN - JR	REVISED -	
PLOT SCALE = 0.16666633 ' / in.	CHECKED - RBB	REVISED -	
PLOT DATE = 8/9/2024	DATE - 08/09/2024	REVISED -	

STATE OF ILLINOIS
DEPARTMENT OF TRANSPORTATION

MAINTENANCE OF TRAFFIC-TYPICAL SECTIONS
IL 38 (ROOSEVELT ROAD) OVER IL 53

SCALE: NTS | SHEET 2 OF 2 SHEETS | STA. TO STA.

F.A.P. RTE.	SECTION	COUNTY	TOTAL SHEETS	SHEET NO.
0347	0347 22 BJ3	DUPAGE	98	12
		CONTRACT NO. 62T17		
		ILLINOIS	FED. AID PROJECT	

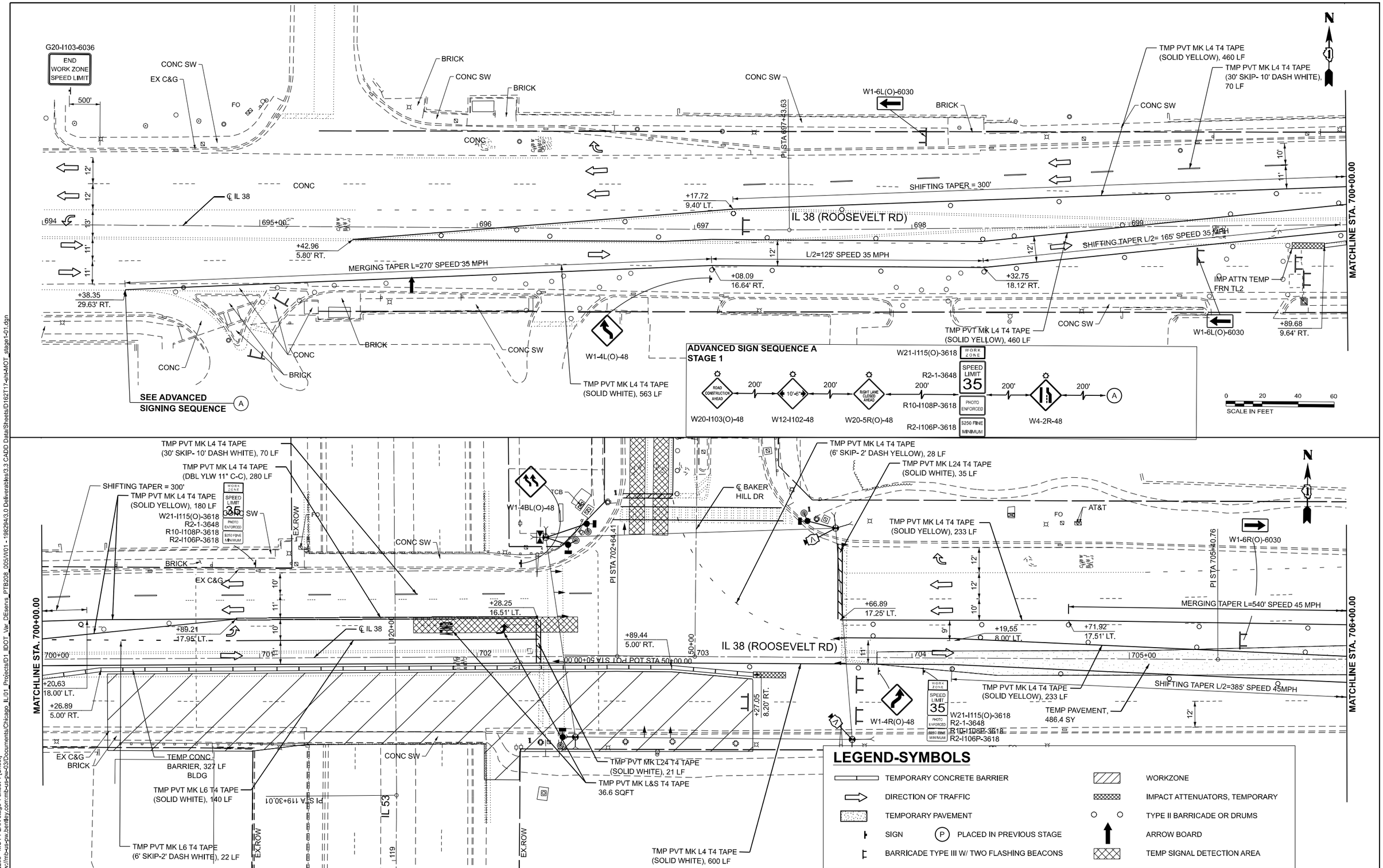

MODEL: PrCL IL38 - MOT PLAN stage 1 sheet 1 [Sheet]
FILE NAME: pw://mb-us-pw.bentley.com:mb-us-pw-03/Documents/Chicago_IL/01_Projects/D1_IDOT_Var_DEservs_PTB208_005/W01 - 198294/3.0 Deliverables/3.3 CADD Data/Sheets/D162T17-eht-MOT_stage1-01.dgn

Michael Baker INTERNATIONAL
200 West Adams Street, Suite 1800, Chicago, IL 60606
Phone: (312) 707-8770 • MBAKERINTL.COM

USER NAME = Connor.Liss	DESIGNED - ZJT	REVISED -	
	DRAWN - JR	REVISED -	
PLOT SCALE = 0.16666633 ' / in.	CHECKED - RBB	REVISED -	
PLOT DATE = 8/9/2024	DATE - 08/09/2024	REVISED -	

STATE OF ILLINOIS
DEPARTMENT OF TRANSPORTATION

SUGGESTED TRAFFIC CONTROL PLAN-IL 38 (STAGE 1)
IL 38 (ROOSEVELT ROAD) OVER IL 53

SCALE: 1"=20' | SHEET 1 OF 7 SHEETS | STA. | TO STA.

F.A.P. RTE.	SECTION	COUNTY	TOTAL SHEETS	SHEET NO.
0347	0347 22 BJ3	DUPAGE	98	13
		CONTRACT NO. 62T17		
	ILLINOIS	FED. AID PROJECT		

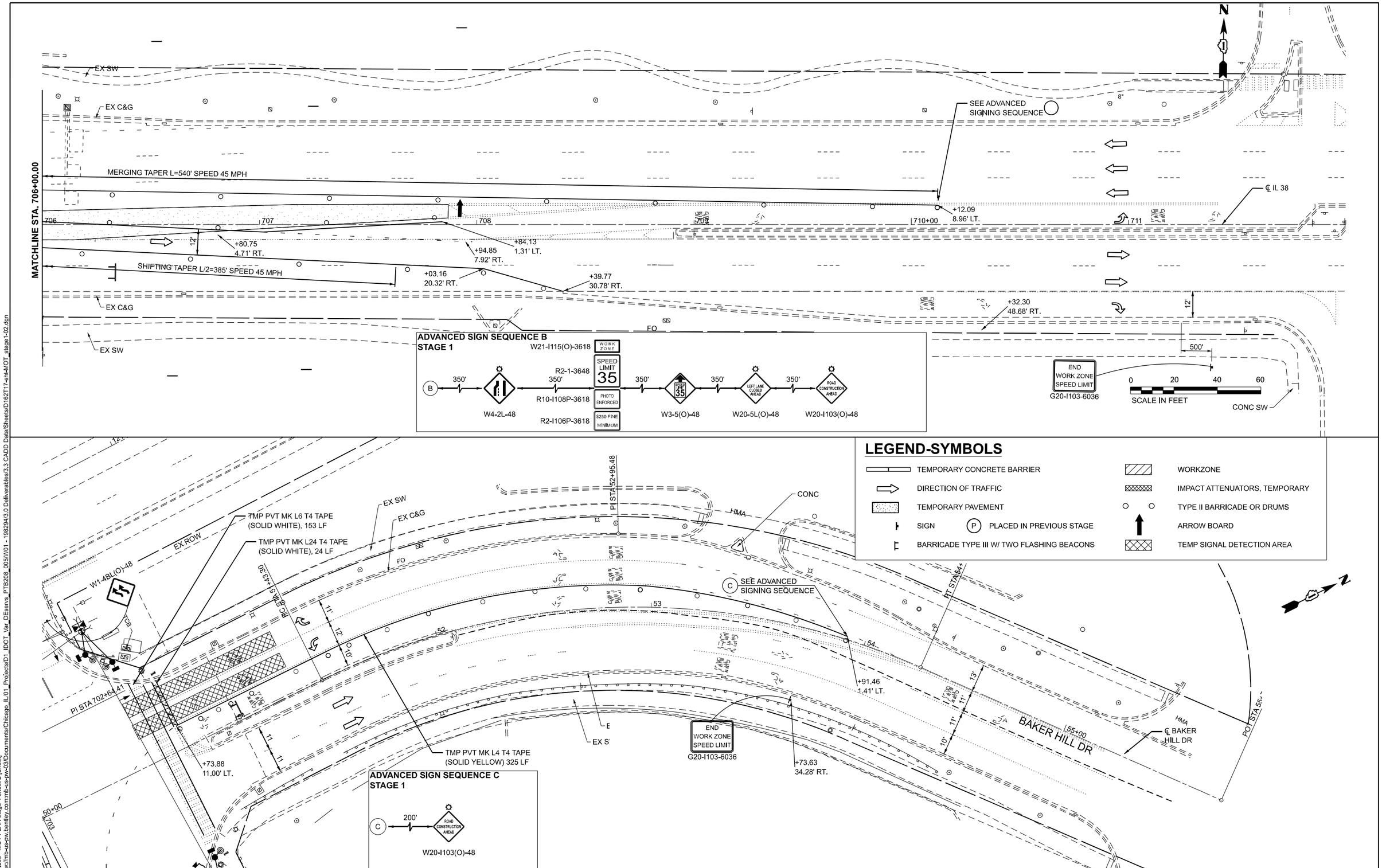

MODEL: PCL IL38 - MOT PLAN stage 1 sheet 2 [Sheet]
FILE NAME: pw://mb-us-pw.bentley.com:mb-us-pw-03/Documents/Chicago_IL/01_Projects/D1_IDOT_Var_DEservs_PTB208_005/W01 - 198294/3.0 Deliverables/3.3 CADD Data/Sheets/D162T17-eIH-MOT_stage1-02.dgn

Michael Baker INTERNATIONAL
200 West Adams Street, Suite 1800, Chicago, IL 60606
Phone: (312) 707-8770 • MBAKERINTL.COM

USER NAME = Connor.Liss	DESIGNED - ZJT	REVISED -	
	DRAWN - JR	REVISED -	
PLOT SCALE = 0.16666633 ' / in.	CHECKED - RBB	REVISED -	
PLOT DATE = 8/9/2024	DATE - 08/09/2024	REVISED -	

STATE OF ILLINOIS
DEPARTMENT OF TRANSPORTATION

SUGGESTED TRAFFIC CONTROL PLAN-IL 38 (STAGE 1)
IL 38 (ROOSEVELT ROAD) OVER IL 53

SCALE: 1"=20' | SHEET 2 OF 7 SHEETS | STA. | TO STA.

F.A.P. RTE.	SECTION	COUNTY	TOTAL SHEETS	SHEET NO.
0347	0347 22 BJ3	DUPAGE	98	14

CONTRACT NO. 62T17
ILLINOIS | FED. AID PROJECT

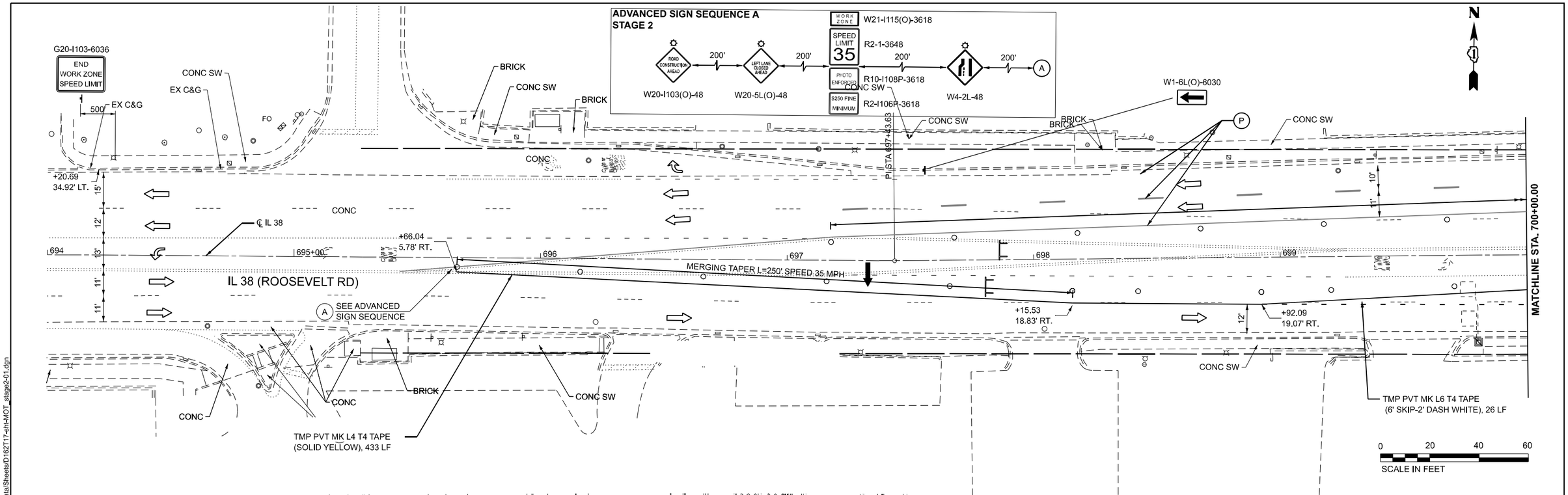

MODEL: PrCL IL38 - MOT PLAN stage 2 sheet 1
FILE NAME: pw://mb-us-pw.bentley.com:mb-us-pw-03/Documents/Chicago_IL/01_Projects/D1_IDOT_Var_DEserve_PTB208_005/W01 - 198294/3.0 Deliverables/3.3 CADD Data/Sheets/D162117-sht-MOT_stage2-01.dgn

Michael Baker INTERNATIONAL
200 West Adams Street, Suite 1800, Chicago, IL 60606
Phone: (312) 707-8770 • MBAKERINTL.COM

USER NAME = Connor.Liss	DESIGNED - ZJT	REVISED -	
	DRAWN - JR	REVISED -	
PLOT SCALE = 0.16666633 ' / in.	CHECKED - RBB	REVISED -	
PLOT DATE = 8/9/2024	DATE - 08/09/2024	REVISED -	

STATE OF ILLINOIS
DEPARTMENT OF TRANSPORTATION

SUGGESTED TRAFFIC CONTROL PLAN-IL 38 (STAGE 2)
IL 38 (ROOSEVELT ROAD) OVER IL 53

SCALE: 1"=20' | SHEET 3 OF 7 SHEETS | STA. TO STA.

F.A.P. RTE.	SECTION	COUNTY	TOTAL SHEETS	SHEET NO.
0347	0347 22 BJ3	DUPAGE	98	15
		CONTRACT NO. 62T17		
		ILLINOIS	FED. AID PROJECT	

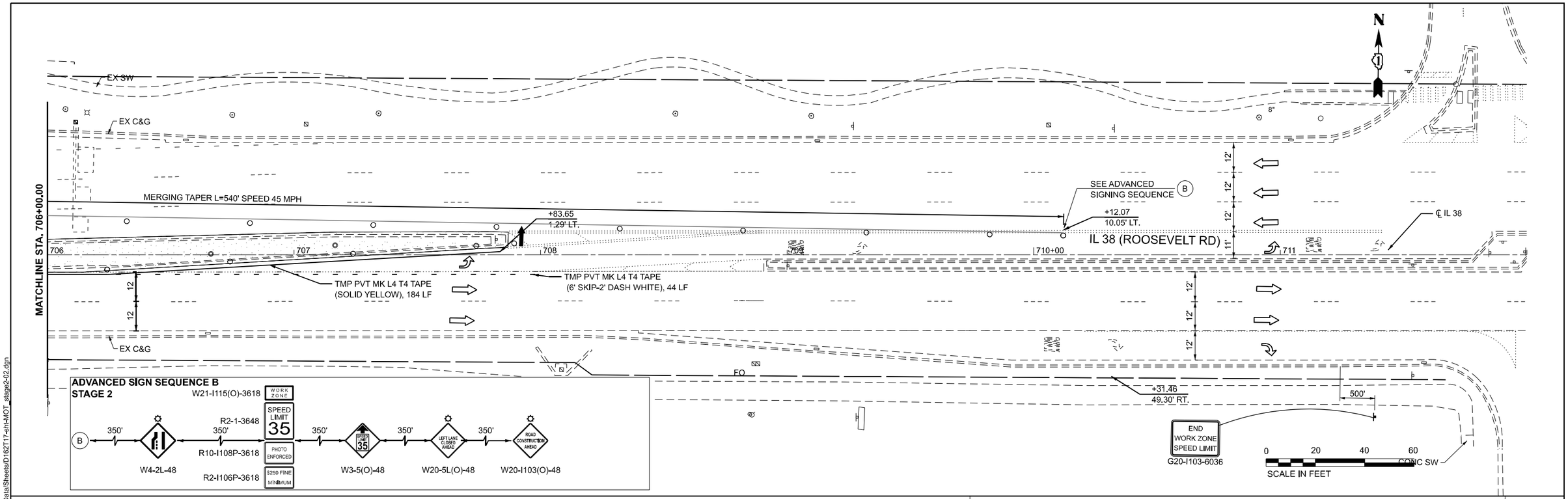

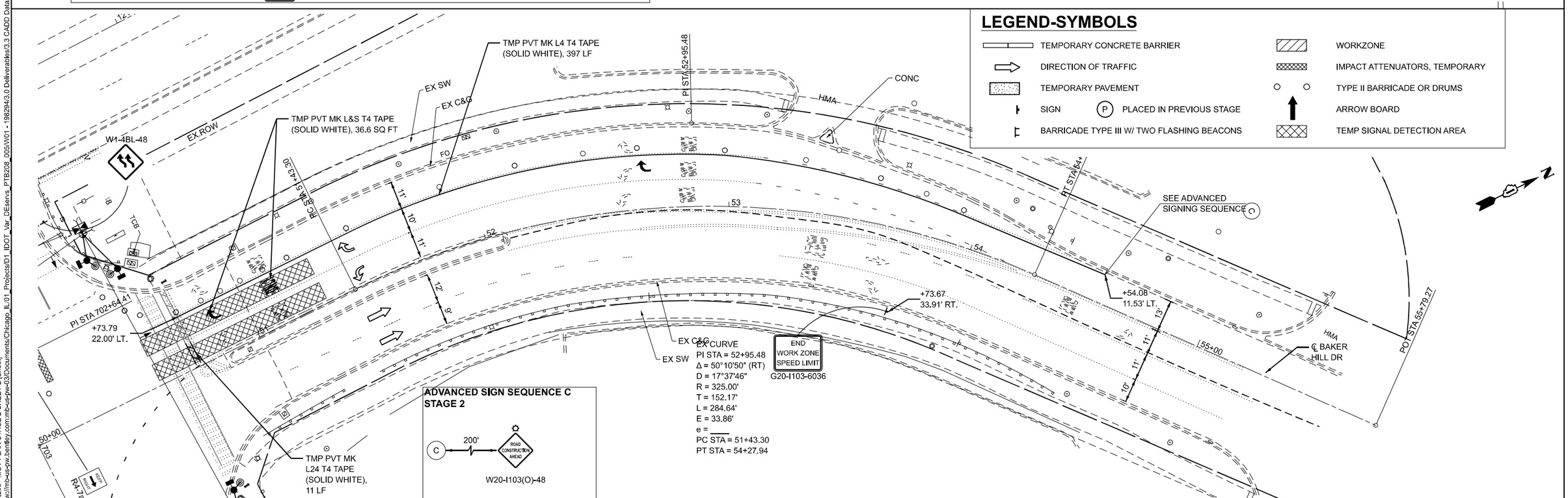

LEGEND-SYMBOLS

- TEMPORARY CONCRETE BARRIER
- DIRECTION OF TRAFFIC
- TEMPORARY PAVEMENT
- SIGN (P) PLACED IN PREVIOUS STAGE
- BARRICADE TYPE III W/ TWO FLASHING BEACONS
- WORKZONE
- IMPACT ATTENUATORS, TEMPORARY
- TYPE II BARRICADE OR DRUMS
- ARROW BOARD
- TEMP SIGNAL DETECTION AREA

MODEL: PrCL IL38 - MOT PLAN STAGE 2 SHEET-2 [Sheet]
FILE NAME: pw://mb-us-pw.bentley.com:mb-us-pw-03/Documents/Chicago_IL/01_Projects/D1_IDOT_Var_DEserve_PTB208_005/W01 - 198294/3.0 Deliverables/3.3 CADD Data/Sheets/D162T17-eIM-MOT_stage2-02.dgn

Michael Baker
INTERNATIONAL
200 West Adams Street, Suite 1800, Chicago, IL 60606
Phone: (312) 707-6770 • MBAKERINTL.COM

USER NAME = Connor.Liss	DESIGNED - ZJT	REVISED -	
	DRAWN - JR	REVISED -	
PLOT SCALE = 0.16666633 ' / in.	CHECKED - RBB	REVISED -	
PLOT DATE = 8/9/2024	DATE - 08/09/2024	REVISED -	

STATE OF ILLINOIS
DEPARTMENT OF TRANSPORTATION

SUGGESTED TRAFFIC CONTROL PLAN-IL 38 (STAGE 2)
IL 38 (ROOSEVELT ROAD) OVER IL 53

SCALE: 1"=20' | SHEET 4 OF 7 SHEETS | STA. TO STA.

F.A.P. RTE.	SECTION	COUNTY	TOTAL SHEETS	SHEET NO.
0347	0347 22 BJ3	DUPAGE	98	16
		CONTRACT NO. 62T17		
		ILLINOIS	FED. AID PROJECT	

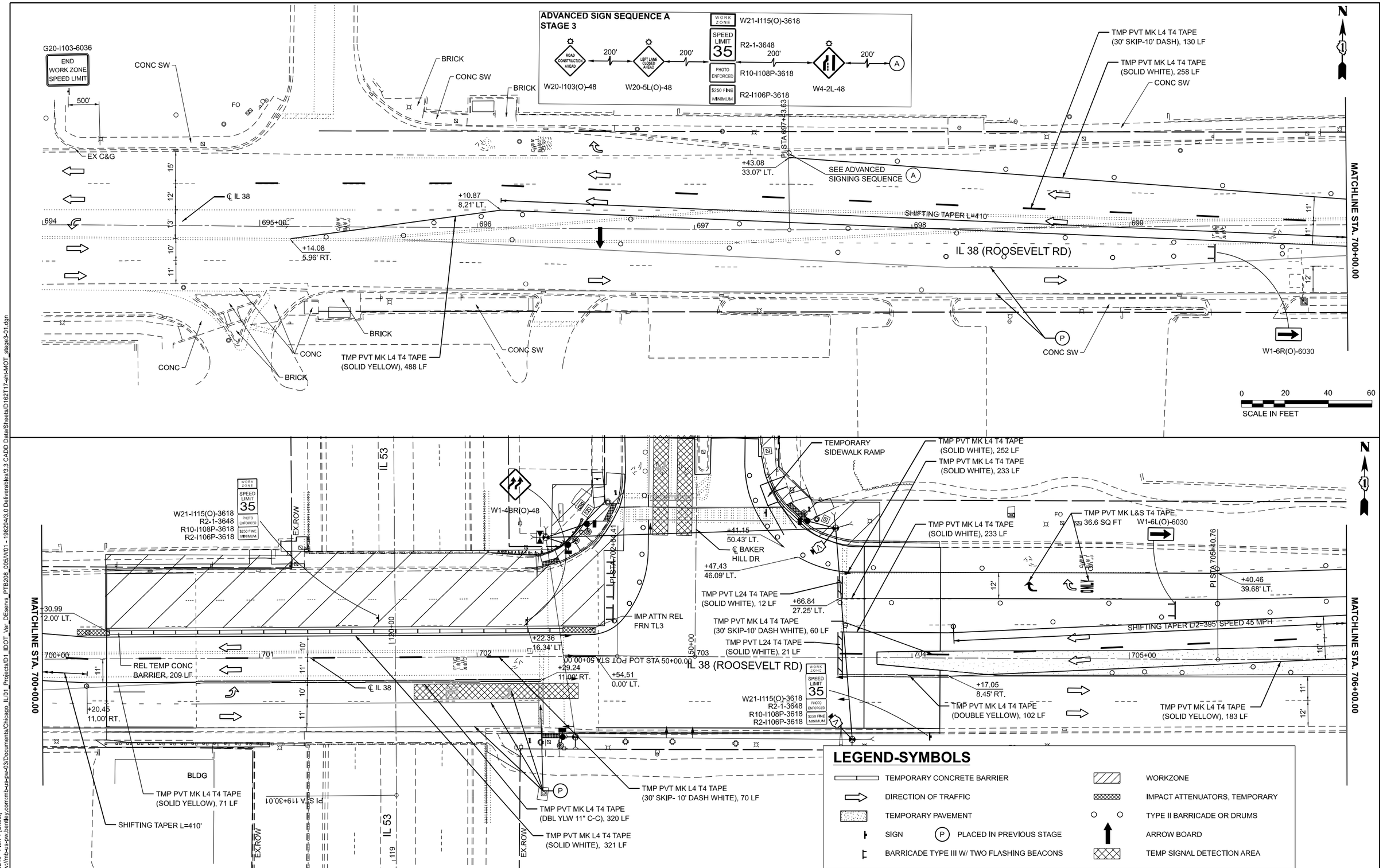

MODEL: PrCL IL40 - Plan 1 [Sheet]
FILE NAME: pw://mb-us-pw.bentley.com:mb-us-pw-03/Documents/Chicago_IL/01_Projects/D1_IDOT_Var_DEserv_PTB208_005/W01 - 1982943.0 Deliverables/3.3 CADD Data/Sheets/D162717-sht-MOT_stage3-01.dgn

Michael Baker INTERNATIONAL
200 West Adams Street, Suite 1800, Chicago, IL 60606
Phone: (312) 707-8770 • MBAKERINTL.COM

USER NAME = Connor.Liss	DESIGNED - ZJT	REVISED -	
	DRAWN - JR	REVISED -	
PLOT SCALE = 0.16666633 ' / in.	CHECKED - RBB	REVISED -	
PLOT DATE = 8/9/2024	DATE - 08/09/2024	REVISED -	

STATE OF ILLINOIS
DEPARTMENT OF TRANSPORTATION

SUGGESTED TRAFFIC CONTROL PLAN-IL 38 (STAGE 3)
IL 38 (ROOSEVELT ROAD) OVER IL 53

SCALE: 1" = 20' | SHEET 5 OF 7 SHEETS | STA. 694+00.00 TO STA. 706+00.00

F.A.P. RTE.	SECTION	COUNTY	TOTAL SHEETS	SHEET NO.
0347	0347 22 BJ3	DUPAGE	98	17
		CONTRACT NO. 62T17		
		ILLINOIS	FED. AID PROJECT	

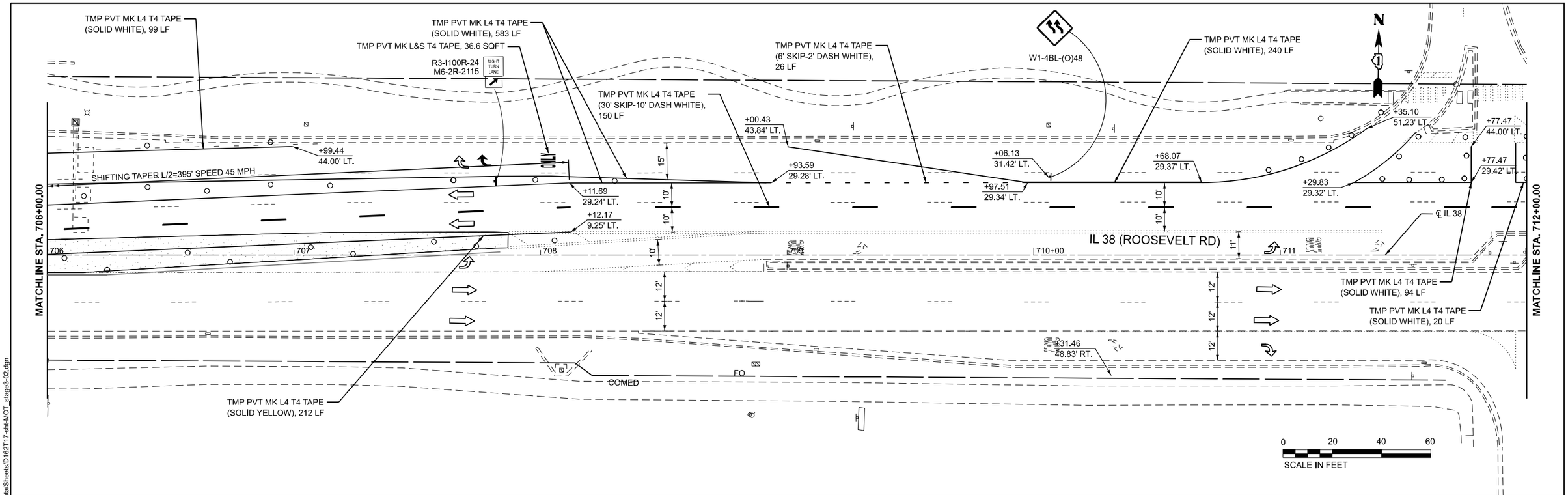

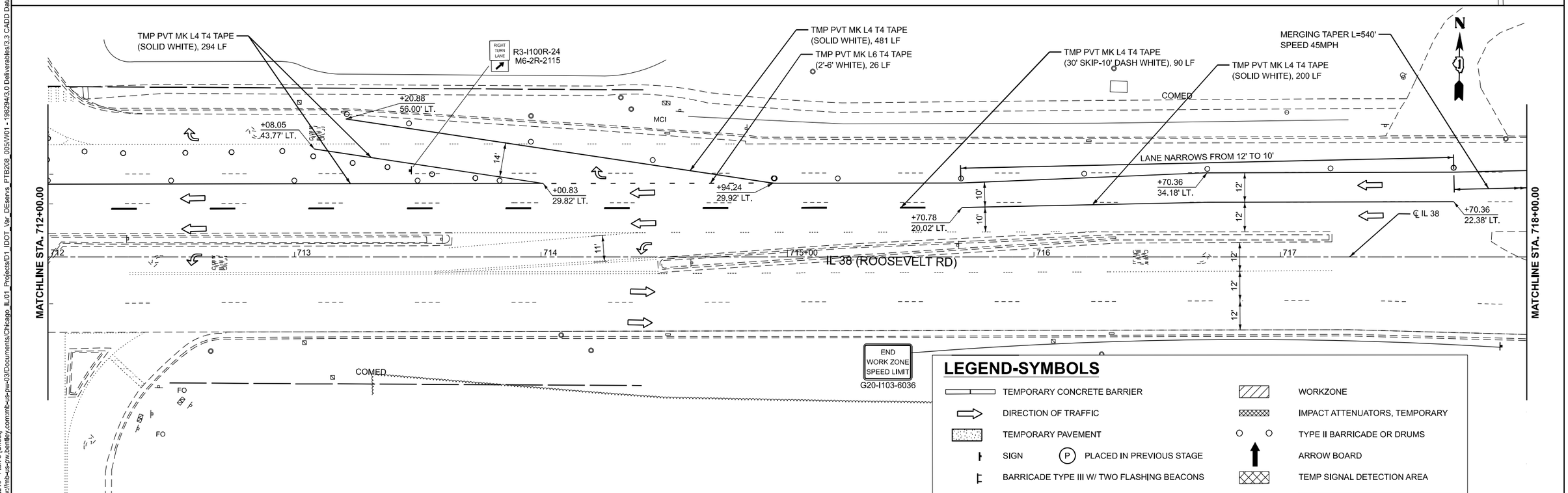

LEGEND-SYMBOLS

- TEMPORARY CONCRETE BARRIER
- DIRECTION OF TRAFFIC
- TEMPORARY PAVEMENT
- SIGN (P) PLACED IN PREVIOUS STAGE
- BARRICADE TYPE III W/ TWO FLASHING BEACONS
- WORKZONE
- IMPACT ATTENUATORS, TEMPORARY
- TYPE II BARRICADE OR DRUMS
- ARROW BOARD
- TEMP SIGNAL DETECTION AREA

MODEL: PrCL IL40 - Plan 3 [Sheet]
FILE NAME: pw://mb-us-pw.bentley.com:mb-us-pw-03/Documents/Chicago_IL/01_Projects/D1_IDOT_Var_DEserv_PTB208_005/W01 - 198294.3.0 Deliverables/3.3 CADD Data/Sheets/D162117-eIH-MOT_stage3-02.dgn

Michael Baker INTERNATIONAL
200 West Adams Street, Suite 1800, Chicago, IL 60606
Phone: (312) 707-8770 • MBAKERINTL.COM

USER NAME = Connor.Liss	DESIGNED - ZJT	REVISED -	
	DRAWN - JR	REVISED -	
PLOT SCALE = 0.16666633 ' / in.	CHECKED - RBB	REVISED -	
PLOT DATE = 8/9/2024	DATE - 08/09/2024	REVISED -	

STATE OF ILLINOIS
DEPARTMENT OF TRANSPORTATION

SUGGESTED TRAFFIC CONTROL PLAN-IL 38 (STAGE 3)
IL 38 (ROOSEVELT ROAD) OVER IL 53

SCALE: 1" = 20' | SHEET 6 OF 7 SHEETS | STA. 706+00.00 TO STA. 718+00.00

F.A.P. RTE.	SECTION	COUNTY	TOTAL SHEETS	SHEET NO.
0347	0347 22 BJ3	DUPAGE	98	18
		CONTRACT NO. 62T17		
		ILLINOIS	FED. AID PROJECT	

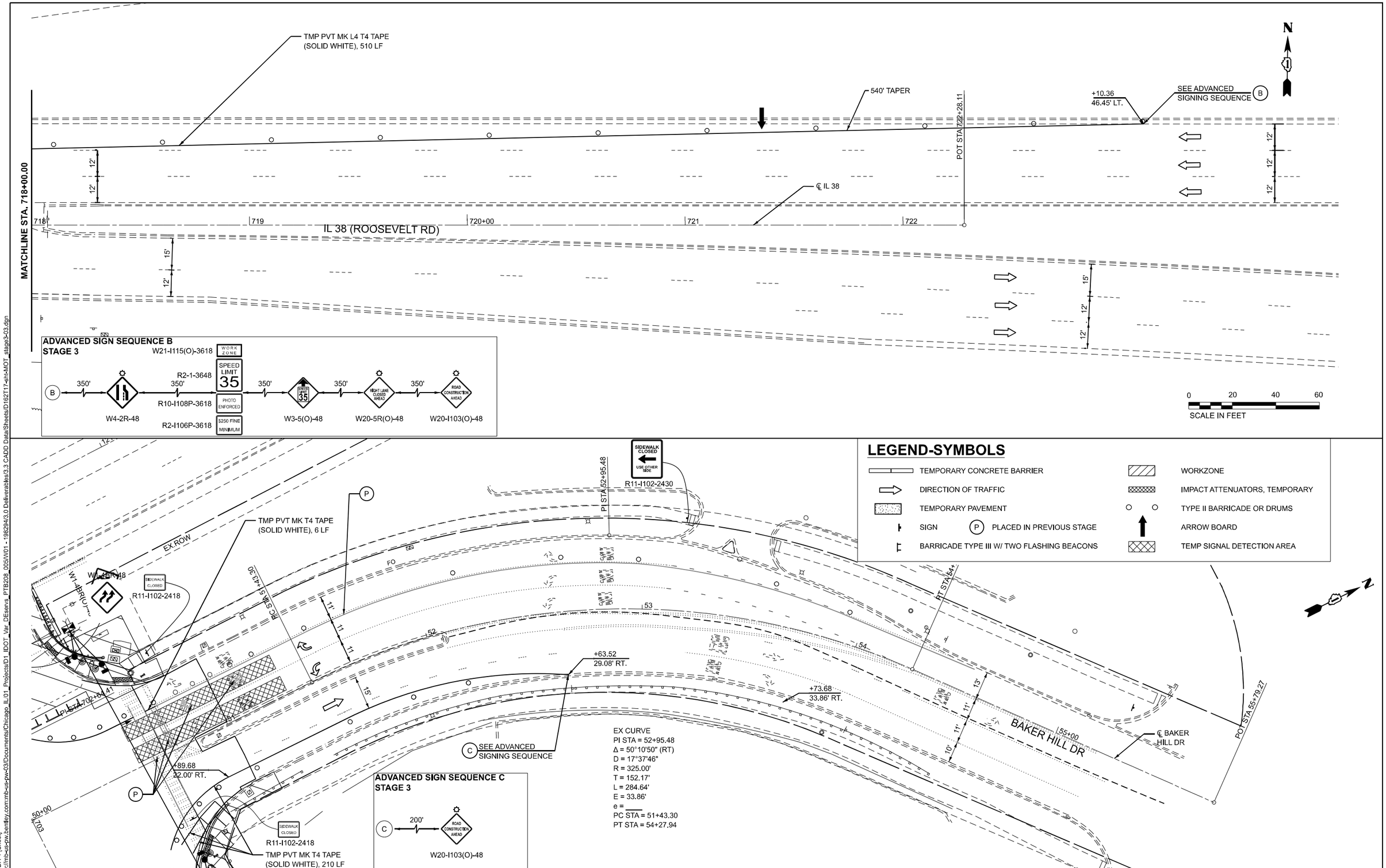

MODEL: STG3-BH-1 [Sheet]
FILE NAME: pw://mb-us-pw.bentley.com:mb-us-pw-03/Documents/Chicago_IL/01_Projects/D1_IDOT_Var_DEserve_PTB208_005/W01 - 198294/3.0 Deliverables/3.3 CADD Data/Sheets/D162T17-eh-MOT_stage3-03.dgn

Michael Baker
INTERNATIONAL
200 West Adams Street, Suite 1800, Chicago, IL 60606
Phone: (312) 707-8770 • MBAKERINTL.COM

USER NAME = Connor.Liss	DESIGNED - ZJT	REVISED -	
	DRAWN - JR	REVISED -	
PLOT SCALE = 0.16666633 ' / in.	CHECKED - RBB	REVISED -	
PLOT DATE = 8/9/2024	DATE - 08/09/2024	REVISED -	

STATE OF ILLINOIS
DEPARTMENT OF TRANSPORTATION

SUGGESTED TRAFFIC CONTROL PLAN-IL 38 (STAGE 3)
IL 38 (ROOSEVELT ROAD) OVER IL 53

SCALE: 1"=20' | SHEET 7 OF 7 SHEETS | STA. 50+00.00 TO STA. 56+00.00

F.A.P. RTE.	SECTION	COUNTY	TOTAL SHEETS	SHEET NO.
0347	0347 22 BJ3	DUPAGE	98	19
		CONTRACT NO. 62T17		
		ILLINOIS	FED. AID PROJECT	

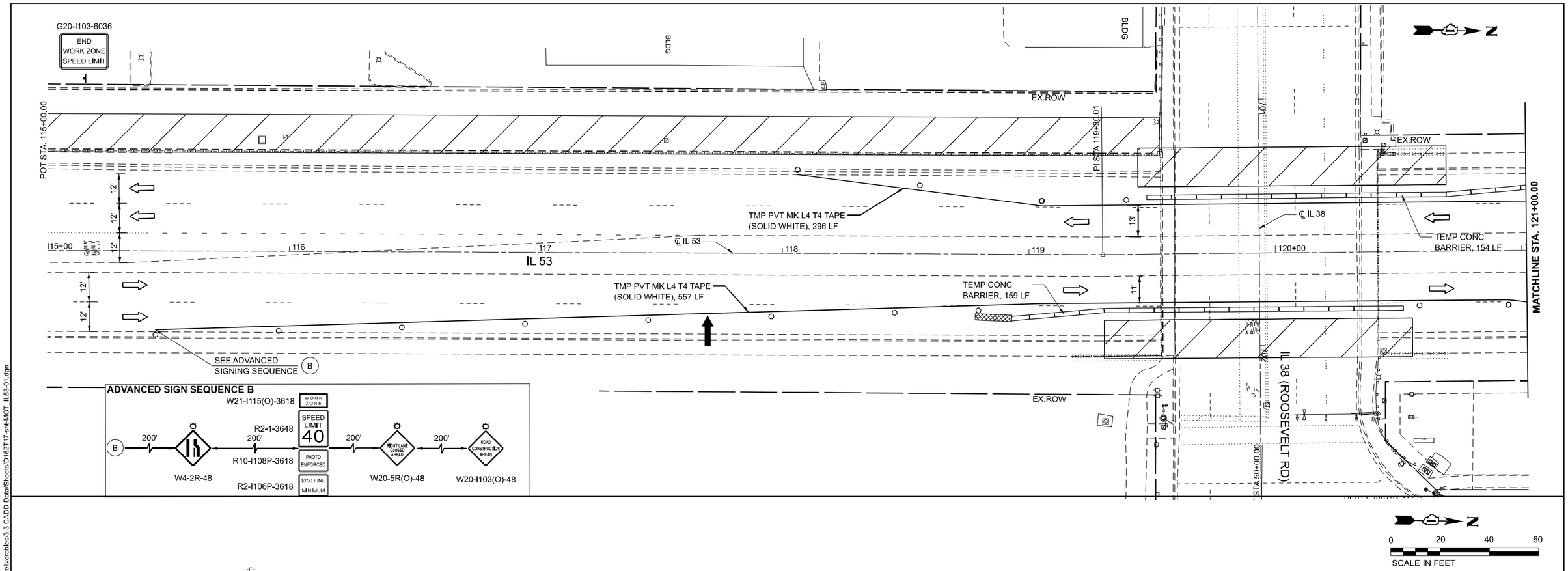

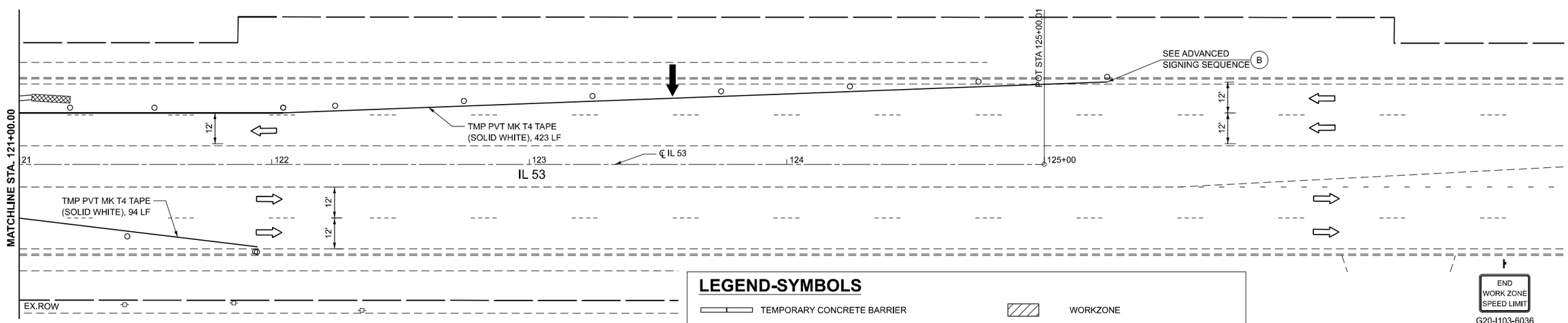

LEGEND-SYMBOLS

- TEMPORARY CONCRETE BARRIER
- DIRECTION OF TRAFFIC
- TEMPORARY PAVEMENT
- SIGN (P) PLACED IN PREVIOUS STAGE
- BARRICADE TYPE III W/ TWO FLASHING BEACONS
- WORKZONE
- IMPACT ATTENUATORS, TEMPORARY
- TYPE II BARRICADE OR DRUMS
- ARROW BOARD
- TEMP SIGNAL DETECTION AREA

MODEL: PrCL IL53 - MOT - IL 53-01 [Sheet]
FILE NAME: pw://mb-us-pw.bentley.com:mb-us-pw-03/Documents/Chicago_IL/01_Projects/D1_IDOT_Var_DEservs_PTB208_005/W01 - 1982943.0 Deliverables/3.3 CADD Data/Sheets/D162T17-eIH-MOT_IL53-01.dgn

Michael Baker INTERNATIONAL
200 West Adams Street, Suite 1800, Chicago, IL 60606
Phone: (312) 707-8770 • MBAKERINTL.COM

USER NAME = Connor.Liss	DESIGNED - ZJT	REVISED -	
	DRAWN - JR	REVISED -	
PLOT SCALE = 0.16666667 ' / in.	CHECKED - RBB	REVISED -	
PLOT DATE = 8/9/2024	DATE - 08/09/2024	REVISED -	

STATE OF ILLINOIS
DEPARTMENT OF TRANSPORTATION

SUGGESTED TRAFFIC CONTROL PLAN-IL 53
IL 38 (ROOSEVELT ROAD) OVER IL 53

SCALE: 1"=20' | SHEET 1 OF 1 SHEETS | STA. 115+00.00 TO STA. 127+00.00

F.A.P. RTE.	SECTION	COUNTY	TOTAL SHEETS	SHEET NO.
0347	0347 22 BJ3	DUPAGE	98	20
		CONTRACT NO. 62T17		
		ILLINOIS	FED. AID PROJECT	

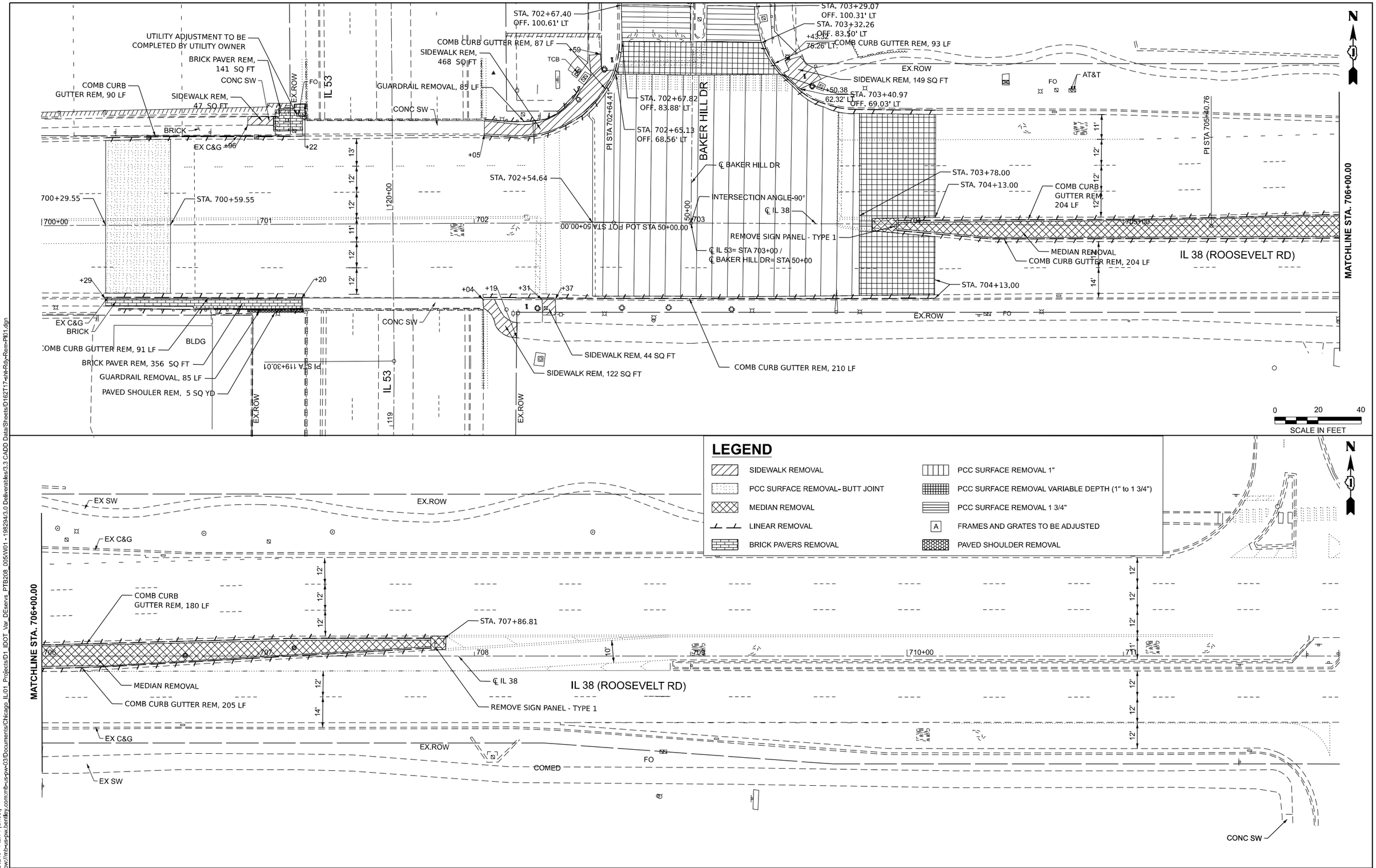

LEGEND

SIDEWALK REMOVAL	PCC SURFACE REMOVAL 1"
PCC SURFACE REMOVAL- BUTT JOINT	PCC SURFACE REMOVAL VARIABLE DEPTH (1" to 1 3/4")
MEDIAN REMOVAL	PCC SURFACE REMOVAL 1 3/4"
LINEAR REMOVAL	FRAMES AND GRATES TO BE ADJUSTED
BRICK PAVERS REMOVAL	PAVED SHOULDER REMOVAL

MODEL: PrCL IL40 - Plan 1 [Sheet]
FILE NAME: pw://mb-us-pw.bentley.com:mb-us-pw-03/Documents/Chicago_IL/01_Projects/D1_IDOT_Var_DEservs_PTB208_005/W01 - 198294/3.0 Deliverables/3.3 CADD Data/Sheets/D162T17-eIt-Rdy-Rem-Pl01.dgn

Michael Baker INTERNATIONAL
200 West Adams Street, Suite 1800, Chicago, IL 60606
Phone: (312) 707-8770 • MBAKERINTL.COM

USER NAME = Connor.Liss	DESIGNED - ZJT	REVISED -	
	DRAWN - JR	REVISED -	
PLOT SCALE = 0.16666667 ' / in.	CHECKED - RBB	REVISED -	
PLOT DATE = 8/9/2024	DATE - 08/09/2024	REVISED -	

STATE OF ILLINOIS
DEPARTMENT OF TRANSPORTATION

ROADWAY REMOVAL PLAN
IL 38 (ROOSEVELT ROAD) OVER IL 53

SCALE: 1"=20' | SHEET 1 OF 1 SHEETS | STA. 700+00.00 TO STA. 712+00.00

F.A.P. RTE.	SECTION	COUNTY	TOTAL SHEETS	SHEET NO.
0347	0347 22 BJ3	DUPAGE	98	21
		CONTRACT NO. 62T17		
		ILLINOIS	FED. AID PROJECT	

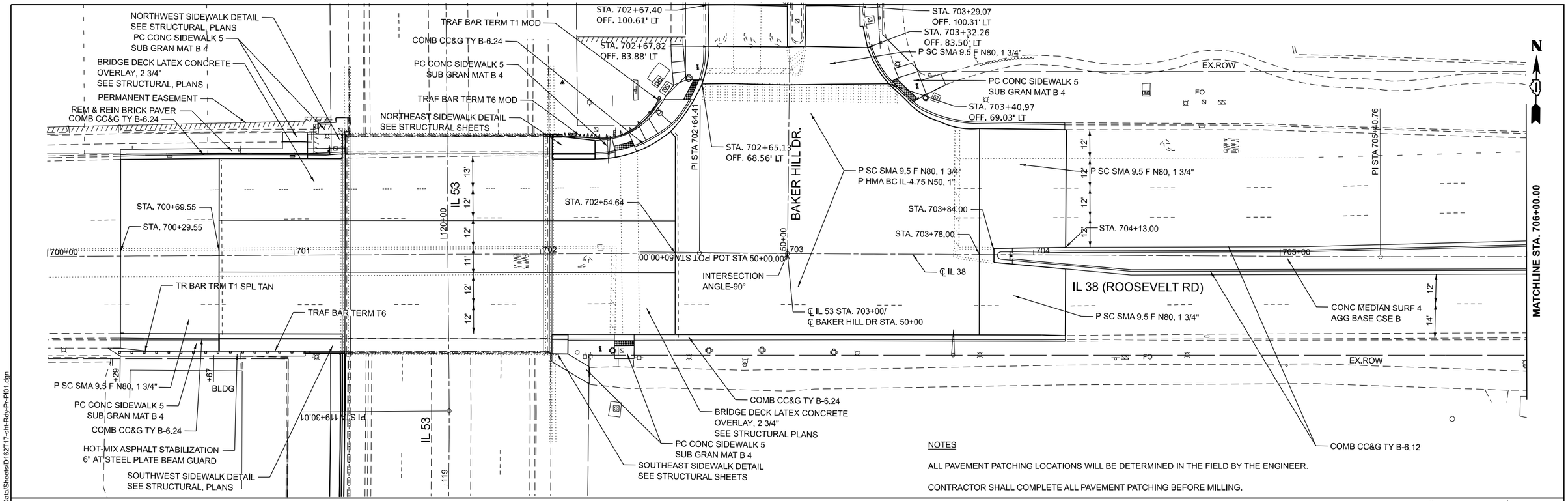

NOTES

ALL PAVEMENT PATCHING LOCATIONS WILL BE DETERMINED IN THE FIELD BY THE ENGINEER.

CONTRACTOR SHALL COMPLETE ALL PAVEMENT PATCHING BEFORE MILLING.

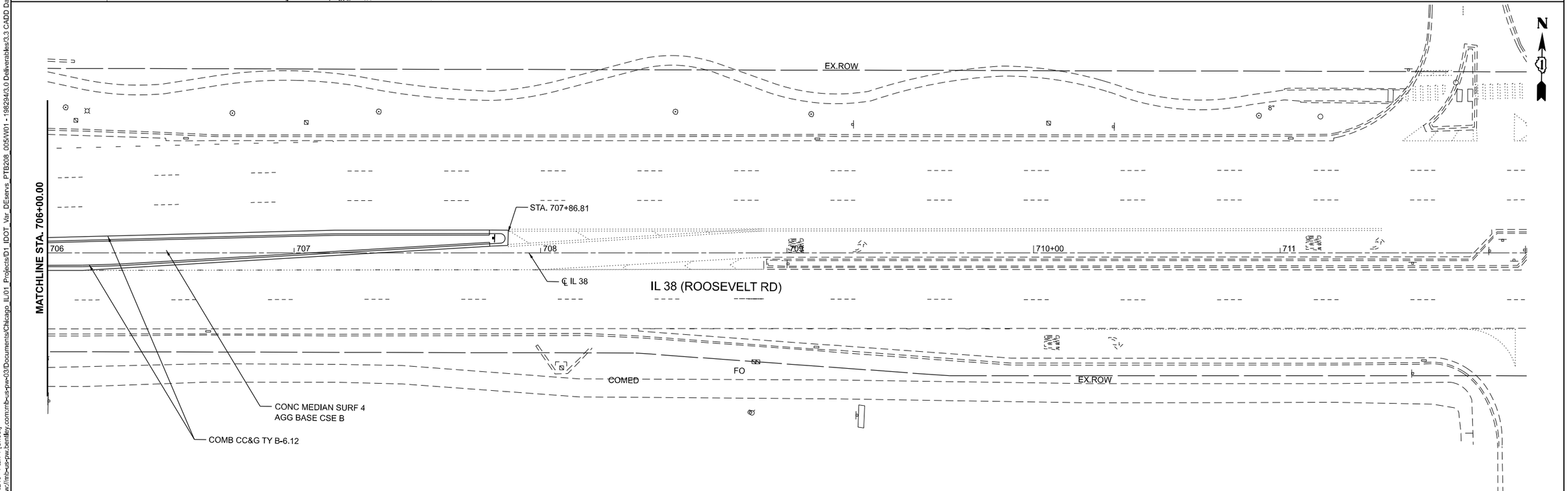

Michael Baker INTERNATIONAL 200 West Adams Street, Suite 1800, Chicago, IL 60606 Phone: (312) 707-8770 • MBAKERINTL.COM	USER NAME = Winson.Teng	DESIGNED - ZJT	REVISED -	STATE OF ILLINOIS DEPARTMENT OF TRANSPORTATION	PROPOSED ROADWAY PLAN IL 38 (ROOSEVELT ROAD) OVER IL 53	F.A.P. RTE.	SECTION	COUNTY	TOTAL SHEETS / SHEET NO.
		DRAWN - ZJT	REVISED -			0347	0347 22 BJ3	DUPAGE	98 / 22
	PLOT SCALE = 0.16666667 ' / in.	CHECKED - RBB	REVISED -					CONTRACT NO. 62T17	
	PLOT DATE = 9/20/2024	DATE - 08/09/2024	REVISED -		SCALE: 1"=20' SHEET 1 OF 1 SHEETS STA. 700+00.00 TO STA. 712+00.00			ILLINOIS FED. AID PROJECT	

MODEL: PrCL IL40 - Plan 1 [Sheet]
FILE NAME: pw://mb-us-pw.bentley.com:mb-us-pw-03/Documents/Chicago_IL/01_Projects/D1_IDOT_Var_DEservs_PTB208_005/W01 - 198294/3.0 Deliverables/3.3 CADD Data/Sheets/D162T17-eh-Rdy-Pr-P01.dgn

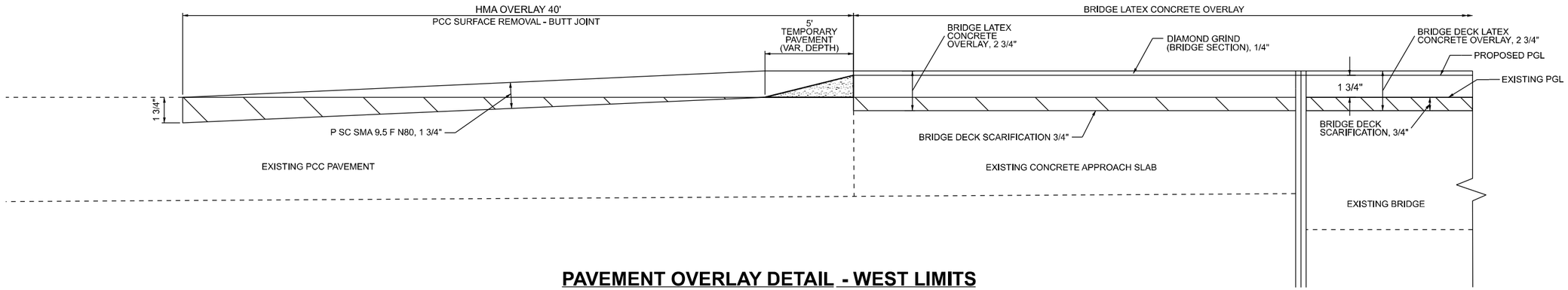

PAVEMENT OVERLAY DETAIL - WEST LIMITS

STA. 700+50 TO STA. 701+20
BRIDGE OMMISSION ST. 701+20 TO STA. 702+04

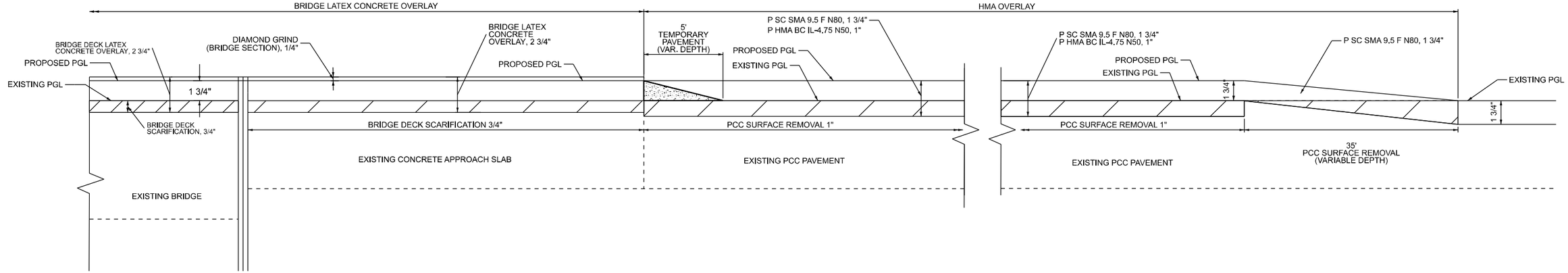

PAVEMENT OVERLAY DETAIL - EAST LIMITS

BRIDGE OMMISSION ST. 701+20 TO STA. 702+04
STA. 702+04 TO STA. 704+13

NOTES
1. THE FINAL PROFILE GRADE LINE WILL BE RAISED BY 1 3/4 INCHES

MODEL: DETAILS_SHEET [Sheet]
FILE NAME: pw://mb-us-pw.bentley.com:mb-us-pw-03/Documents/Chicago_IL/01_Projects/D1_IDOT_Var_DEservs_PTB208_005/W01 - 1982943.0 Deliverables/3.3 CADD Data/Sheets/D162117-eIH-RoadwayDetails-01.dgn

Michael Baker INTERNATIONAL
200 West Adams Street, Suite 1800, Chicago, IL 60606
Phone: (312) 707-8770 • MBAKERINTL.COM

USER NAME = Winson.Teng	DESIGNED - ZJT	REVISED -	
	DRAWN - MFK	REVISED -	
PLOT SCALE = 0.16666633 ' / in.	CHECKED - RBB	REVISED -	
PLOT DATE = 9/20/2024	DATE - 02/09/2024	REVISED -	

STATE OF ILLINOIS
DEPARTMENT OF TRANSPORTATION

ROADWAY DETAILS
IL 38 (ROOSEVELT ROAD) OVER IL 53

SCALE: Full Size 1 = 1 | SHEET 1 OF 2 SHEETS | STA. TO STA.

F.A.P. RTE.	SECTION	COUNTY	TOTAL SHEETS	SHEET NO.
0347	0347 22 BJ3	DUPAGE	98	23
		CONTRACT NO. 62T17		
	ILLINOIS	FED. AID PROJECT		

TEMPORARY SIDEWALK RAMP DETAIL

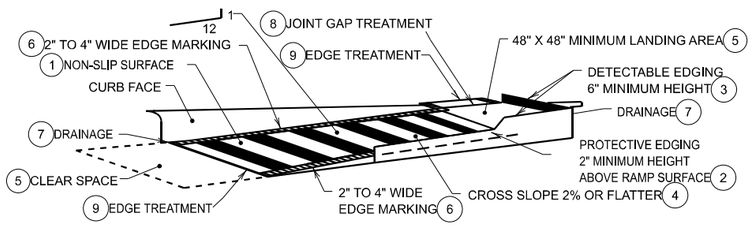

TEMPORARY CURB RAMP

PARALLEL TO CURB

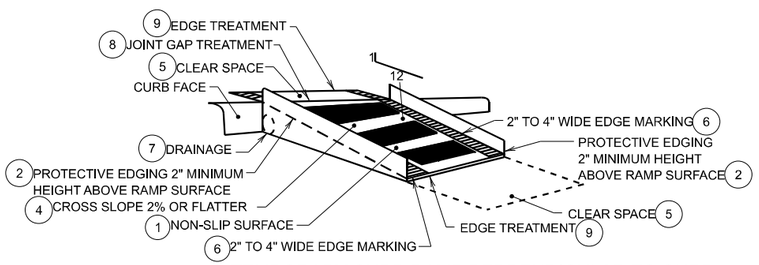

TEMPORARY CURB RAMP PERPENDICULAR TO CURB

SHOWN WITH PROTECTIVE EDGE

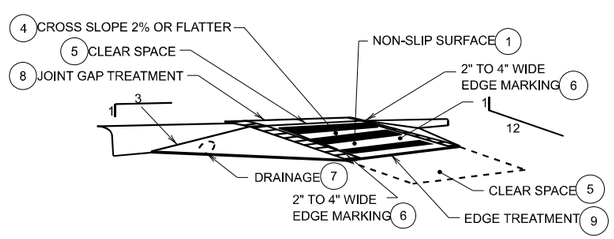

TEMPORARY CURB RAMP PERPENDICULAR TO CURB

SHOWN WITH SIDE APRON

CONSTRUCTION REQUIREMENTS:

THIS WORK SHALL BE IN ACCORDANCE WITH STANDARD 701801. TEMPORARY SIDEWALK RAMPS TO MAINTAIN ACCESS SHALL BE COMPLIANT WITH THE ADA REQUIREMENTS AND SHALL BE USED AT LOCATIONS TO MAINTAIN A MINIMUM OF ONE ADA COMPLIANT PEDESTRIAN ACCESS PATH AROUND CONSTRUCTIONACTIVITIES AT ALL TIMES.

CONSTRUCT SLOPES AS INDICATED OR FLATTER, BUT NOT STEEPER.

TPAR SHOULD BE KEPT FREE OF TRASH, SEDIMENT, AND DEBRIS.

1. CONSTRUCT CURB RAMPS AT LEAST 5 FEET WIDE WITH A FIRM, STABLE, AND SLIP-RESISTANT SURFACE.
2. PLACE PROTECTIVE EDGING WITH A 2" MINIMUM HEIGHT WHEN A CURB RAMP OR LANDING PLATFORM HAS A VERTICAL DROP OF 6" OR GREATER OR HAS A SIDE APRON SLOPE STEEPER THAN 1V:3H. CONSIDER PROTECTIVE EDGING WHEN CURB RAMPS OR LANDING PLATFORMS HAVE A VERTICAL DROP OF 3" OR MORE.
3. PLACE DETECTABLE EDGING WITH 6" MINIMUM HEIGHT AND CONTRASTING COLOR ON ALL CURB RAMP LANDINGS WHERE THE WALKWAY CHANGES DIRECTION.
4. CONSTRUCT CURB RAMPS AND LANDINGS WITH A 2% OR FLATTER CROSS SLOPE.
5. PROVIDE A CLEAR SPACE OF AT LEAST 5 FT X 5 FT ABOVE AND BELOW THE CURB RAMP.
6. MARK THE CURB RAMP WALKWAY EDGE WITH A 2" TO 4" WIDE MARKING OF CONTRASTING COLOR. THE MARKING IS OPTIONAL WHERE COLOR-CONTRASTING EDGING IS USED.
7. DO NOT IMPEDE WATER FLOW IN THE GUTTER SYSTEM.
8. NO LATERAL JOINTS OR GAPS BETWEEN SURFACES SHALL EXCEED 0.5" WIDTH.
9. CHANGES BETWEEN SURFACE HEIGHTS SHALL NOT EXCEED 0.5". USE VERTICAL LATERAL EDGES UP TO 0.25" HIGH, AND BEVELED AT 1V:2H FOR LATERAL EDGES BETWEEN 0.25" AND 0.5" HEIGHT.
10. BEVEL THE EDGE OF TEMPORARY WALKWAY SURFACES $^{59}/_{64}$" OR THINNER AT 1V:2H. FOR THICKER WALKWAY SURFACE BEVEL EDGE 1V:20H OR FLATTER.

PARAPET OR WINGWALL

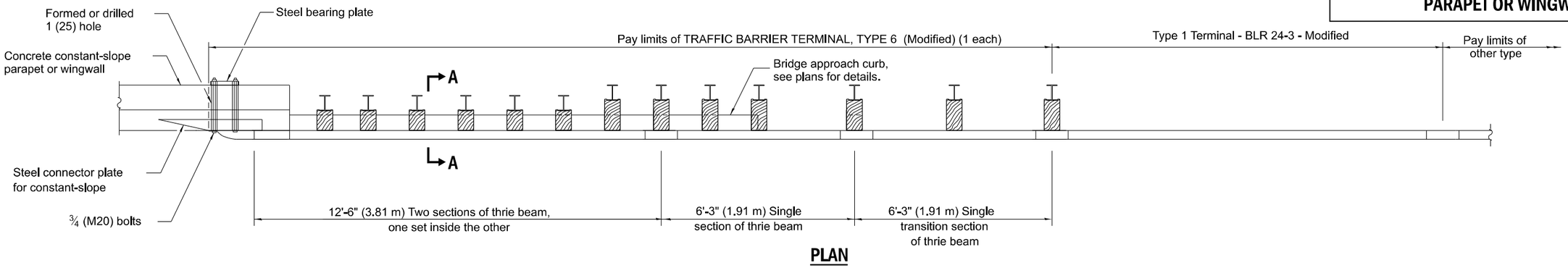

PLAN

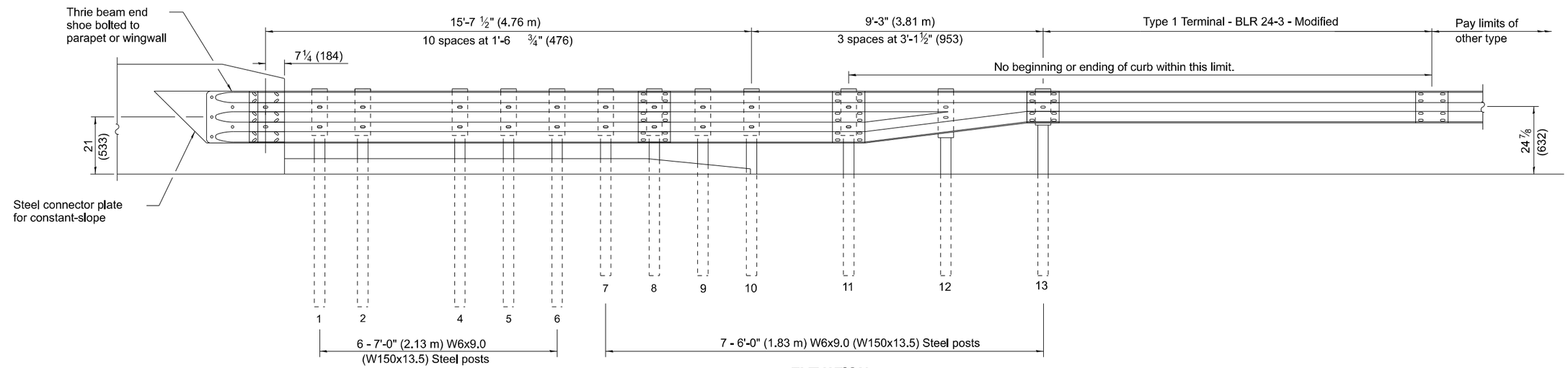

ELEVATION

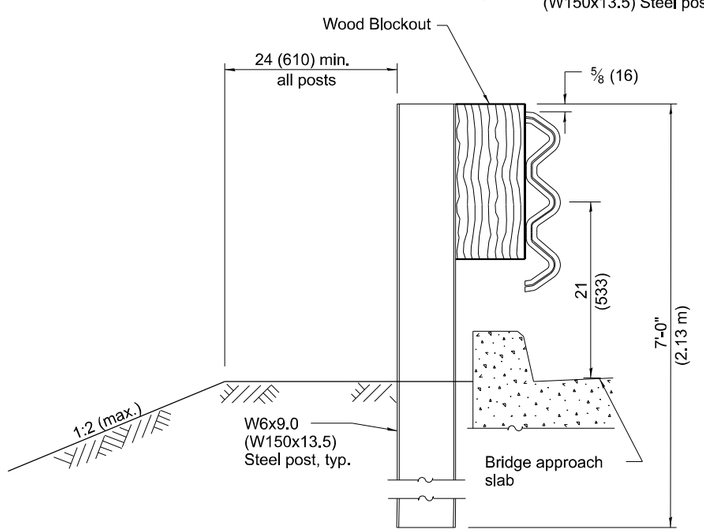

SECTION A-A

GENERAL NOTES

See Standard 630001 for details of guardrail not shown.

Thrie beam rail shall be bolted to block-out at all posts.

All slope ratios are expressed as units of vertical displacement to units of horizontal displacement (V:H).

All dimensions are in inches (millimeters) unless otherwise shown.

MODEL: TS-05a [Sheet]
FILE NAME: pw://mb-us-pw.bentley.com:mb-us-pw-03/Documents/Chicago_IL/01_Projects/D1_IDOT_Var_DEservs_PTB208_005/W01 - 198294.3.0 Deliverables/3.3 CADD Data/Sheets/D162117-sht-tb 6.dgn

Michael Baker
INTERNATIONAL
200 West Adams Street, Suite 1800, Chicago, IL 60606
Phone: (312) 707-8770 · MBAKERINTL.COM

USER NAME = Connor.Liss	DESIGNED - ZT	REVISED -	
	DRAWN - ZT	REVISED -	
PLOT SCALE = 0.16666633 ' / in.	CHECKED - ML	REVISED -	
PLOT DATE = 8/9/2024	DATE - 08/09/2024	REVISED -	

STATE OF ILLINOIS
DEPARTMENT OF TRANSPORTATION

TRAFFIC BARRIER TERMINAL
TYPE 6 (MODIFIED)

SCALE: NONE | SHEET 1 OF 1 SHEETS | STA. | TO STA.

F.A.P RTE.	SECTION	COUNTY	TOTAL SHEETS	SHEET NO.
0347	0347 22 BJ3	DUPAGE	98	25
		CONTRACT NO. 62T17		
		ILLINOIS	FED. AID PROJECT	

OFFSETS TO FACE OF RAIL		
Post	X ft (m)	Y ft (m)
1	37.22 (11.345)	4.0 (1.22)
2	31.09 (9.475)	2.79 (0.850)
3	24.92 (7.595)	1.79 (0.545)
4	20.79 (6.335)	1.25 (0.380)
5	16.64 (5.070)	0.80 (0.245)
6	12.49 (3.805)	0.45 (0.135)
7	6.25 (1.905)	0.11 (0.035)
8	0.00 (0.00)	0.00 (0.00)

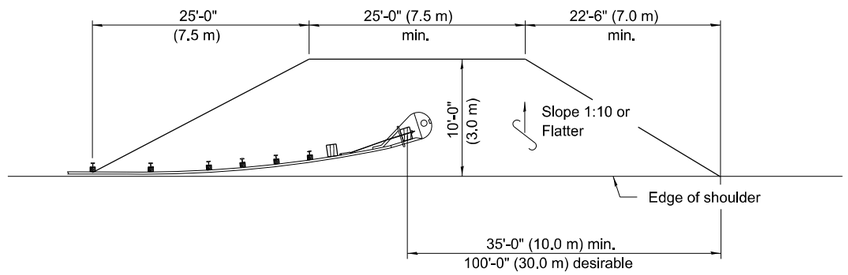

SHOULDER WIDENING TRANSITION

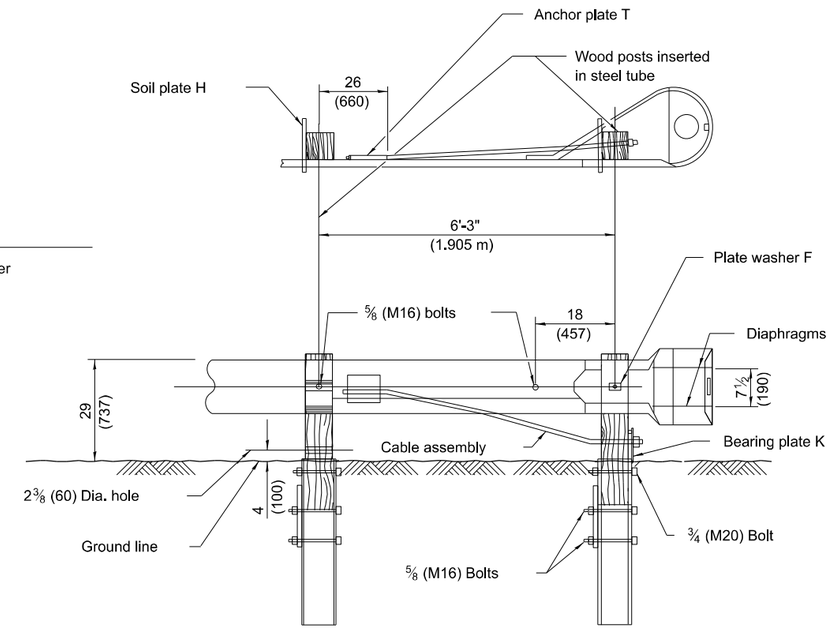

WOOD BREAKAWAY POSTS
TUBULAR STEEL FOUNDATIONS

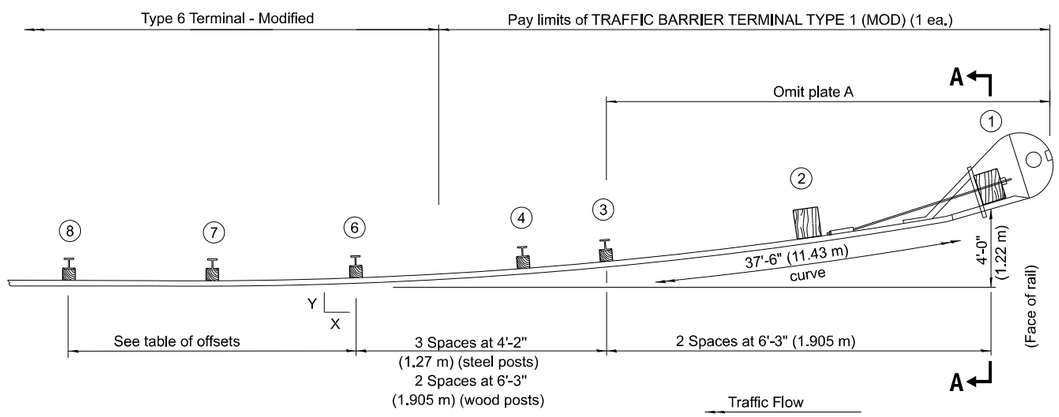

PLAN

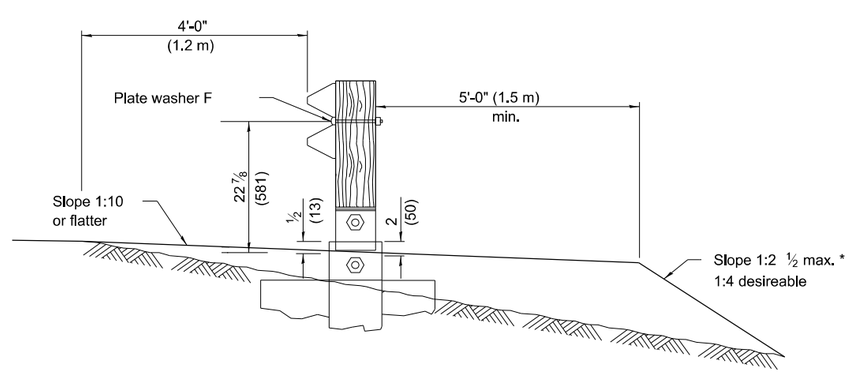

SECTION A-A

* If fill height exceeds 5'-0" (1.5 m) use 1:3 max.

GENERAL NOTES

See Standard B.L.R. 26 for details of guardrail not shown.

Posts at location 1 & 2 shall be wood breakaway posts. Posts other than 1 & 2 may be either standard wood posts or steel posts, at the option of the Contractor. If standard wood posts are used, one post shall be located midway between and in lieu of posts 4 & 5. The offset (Y) for this post shall be 12 (300).

A two-piece assembly may be substituted for the one piece nose shown above.

The bearing plate K shall be held in position by (2) two eightpenny nails driven into the post and bent over the top of the plate.

When this terminal is used with Standard 630001, the guardrail shall transition down to the height of the terminal prior to post 8.

All slope ratios are expressed as units of vertical displacement to units of horizontal displacement (V:H).

All dimensions are in inches (millimeters) unless otherwise shown.

MODEL: TS-05a [Sheet]
FILE NAME: pw://mb-us-pw.bentley.com:mb-us-pw-03/Documents/Chicago_IL/01_Projects/D1_IDOT_Var_DEservs_PTB208_005/W01 - 182294/3.0 Deliverables/3.3 CADD Data/Sheets/D162117-eht-b 1.dgn

Michael Baker INTERNATIONAL
200 West Adams Street, Suite 1800, Chicago, IL 60606
Phone: (312) 707-8770 • MBAKERINTL.COM

USER NAME = Connor.Liss	DESIGNED - ZT	REVISED -	
	DRAWN - JR	REVISED -	
PLOT SCALE = 0.16666633 ' / in.	CHECKED - ML	REVISED -	
PLOT DATE = 8/9/2024	DATE - 08/09/2024	REVISED -	

STATE OF ILLINOIS
DEPARTMENT OF TRANSPORTATION

TRAFFIC BARRIER TERMINAL
TYPE 1 (MODIFIED)

SCALE: NONE | SHEET 1 OF 1 SHEETS | STA. | TO STA.

F.A.P RTE.	SECTION	COUNTY	TOTAL SHEETS	SHEET NO.
0347	0347 22 BJ3	DUPAGE	98	26
		CONTRACT NO. 62T17		
		ILLINOIS	FED. AID PROJECT	

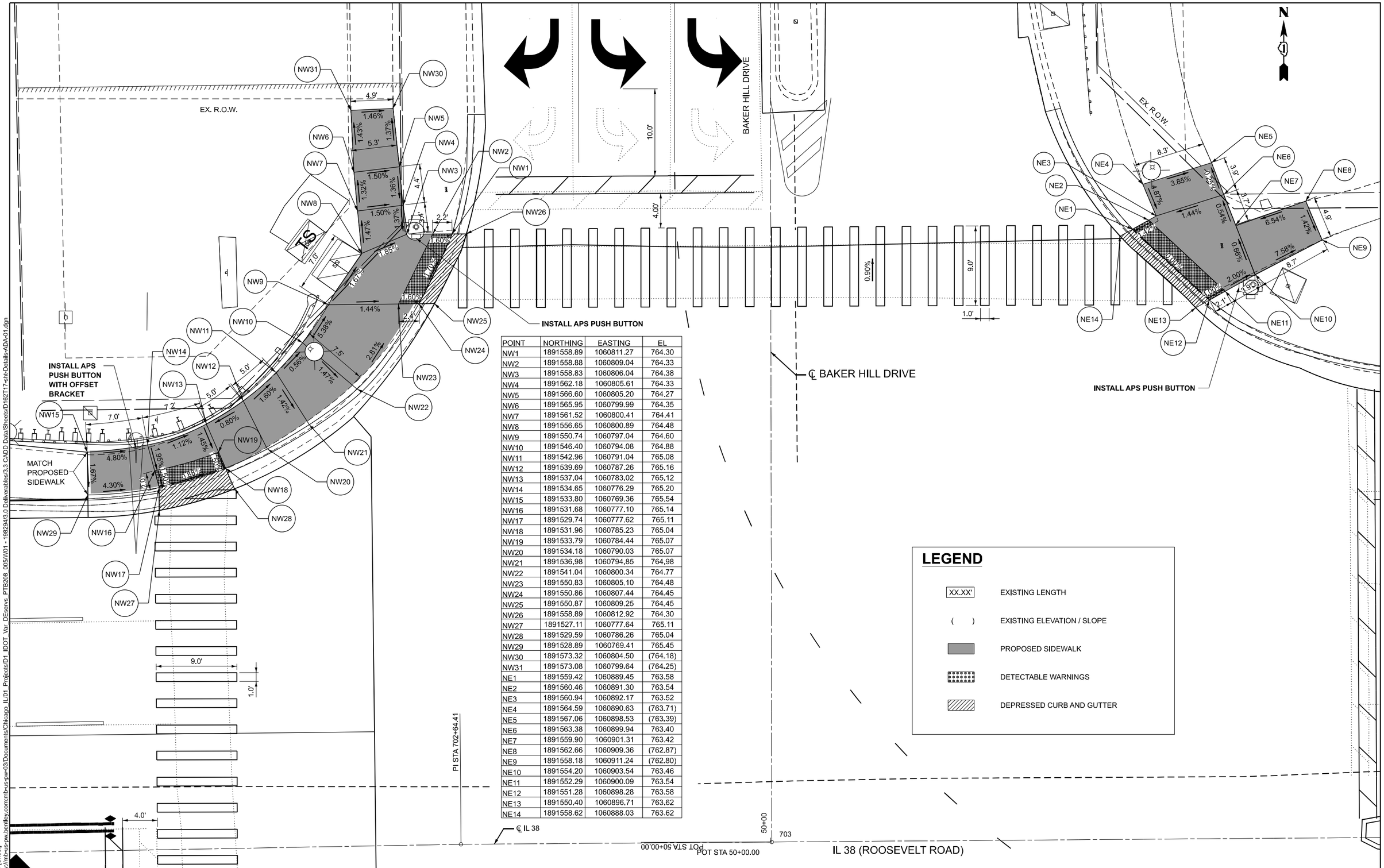

POINT	NORTHING	EASTING	EL
NW1	1891558.89	1060811.27	764.30
NW2	1891558.88	1060809.04	764.33
NW3	1891558.83	1060806.04	764.38
NW4	1891562.18	1060805.61	764.33
NW5	1891566.60	1060805.20	764.27
NW6	1891565.95	1060799.99	764.35
NW7	1891561.52	1060800.41	764.41
NW8	1891556.65	1060800.89	764.48
NW9	1891550.74	1060797.04	764.60
NW10	1891546.40	1060794.08	764.88
NW11	1891542.96	1060791.04	765.08
NW12	1891539.69	1060787.26	765.16
NW13	1891537.04	1060783.02	765.12
NW14	1891534.65	1060776.29	765.20
NW15	1891533.80	1060769.36	765.54
NW16	1891531.68	1060777.10	765.14
NW17	1891529.74	1060777.62	765.11
NW18	1891531.96	1060785.23	765.04
NW19	1891533.79	1060784.44	765.07
NW20	1891534.18	1060790.03	765.07
NW21	1891536.98	1060794.85	764.98
NW22	1891541.04	1060800.34	764.77
NW23	1891550.83	1060805.10	764.48
NW24	1891550.86	1060807.44	764.45
NW25	1891550.87	1060809.25	764.45
NW26	1891558.89	1060812.92	764.30
NW27	1891527.11	1060777.64	765.11
NW28	1891529.59	1060786.26	765.04
NW29	1891528.89	1060769.41	765.45
NW30	1891573.32	1060804.50	(764.18)
NW31	1891573.08	1060799.64	(764.25)
NE1	1891559.42	1060889.45	763.58
NE2	1891560.46	1060891.30	763.54
NE3	1891560.94	1060892.17	763.52
NE4	1891564.59	1060890.63	(763.71)
NE5	1891567.06	1060898.53	(763.39)
NE6	1891563.38	1060899.94	763.40
NE7	1891559.90	1060901.31	763.42
NE8	1891562.66	1060909.36	(762.87)
NE9	1891558.18	1060911.24	(762.80)
NE10	1891554.20	1060903.54	763.46
NE11	1891552.29	1060900.09	763.54
NE12	1891551.28	1060898.28	763.58
NE13	1891550.40	1060896.71	763.62
NE14	1891558.62	1060888.03	763.62

LEGEND

XX.XX'	EXISTING LENGTH
( )	EXISTING ELEVATION / SLOPE
	PROPOSED SIDEWALK
	DETECTABLE WARNINGS
	DEPRESSED CURB AND GUTTER

MODEL: ADA-1 [Sheet]
FILE NAME: pw://mb-us-pw.bentley.com:mb-us-pw-03/Documents/Chicago_IL/01_Projects/D1_IDOT_Var_DEservs_PTB208_005/W01 - 198294.0 Deliverables/3.3 CADD Data/Sheets/D162T17-eIH-Details-ADA-01.dgn

Michael Baker INTERNATIONAL
200 West Adams Street, Suite 1800, Chicago, IL 60606
Phone: (312) 707-8770 • MBAKERINTL.COM

USER NAME = Connor.Liss	DESIGNED - ZJT	REVISED -	
	DRAWN - JR	REVISED -	
PLOT SCALE = 0.16666667 ' / in.	CHECKED - RBB	REVISED -	
PLOT DATE = 8/9/2024	DATE - 08/09/2024	REVISED -	

STATE OF ILLINOIS
DEPARTMENT OF TRANSPORTATION

ADA DETAILS
IL 38 (ROOSEVELT ROAD) OVER IL 53

SCALE: 1"=5' | SHEET 1 OF 2 SHEETS | STA. TO STA.

F.A.P. RTE.	SECTION	COUNTY	TOTAL SHEETS	SHEET NO.
0347	0347 22 BJ3	DUPAGE	98	27
		CONTRACT NO. 62T17		
		ILLINOIS	FED. AID PROJECT	

POINT	NORTHING	EASTING	EL
SW1	1891455.40	1060778.19	765.25
SW2	1891455.49	1060786.19	765.32
SW3	1891452.82	1060778.25	(765.29)
SW4	1891452.91	1060786.25	(765.26)
SW5	1891445.58	1060778.4	(765.21)
SW6	1891445.66	1060786.4	(765.27)
SW7	1891441.89	1060768.27	(765.68)
SW8	1891434.92	1060768.3	(765.6)
SW9	1891447.19	1060759.47	765.73
SW10	1891443.97	1060753.03	765.78
SW11	1891447.11	1060752.98	765.83

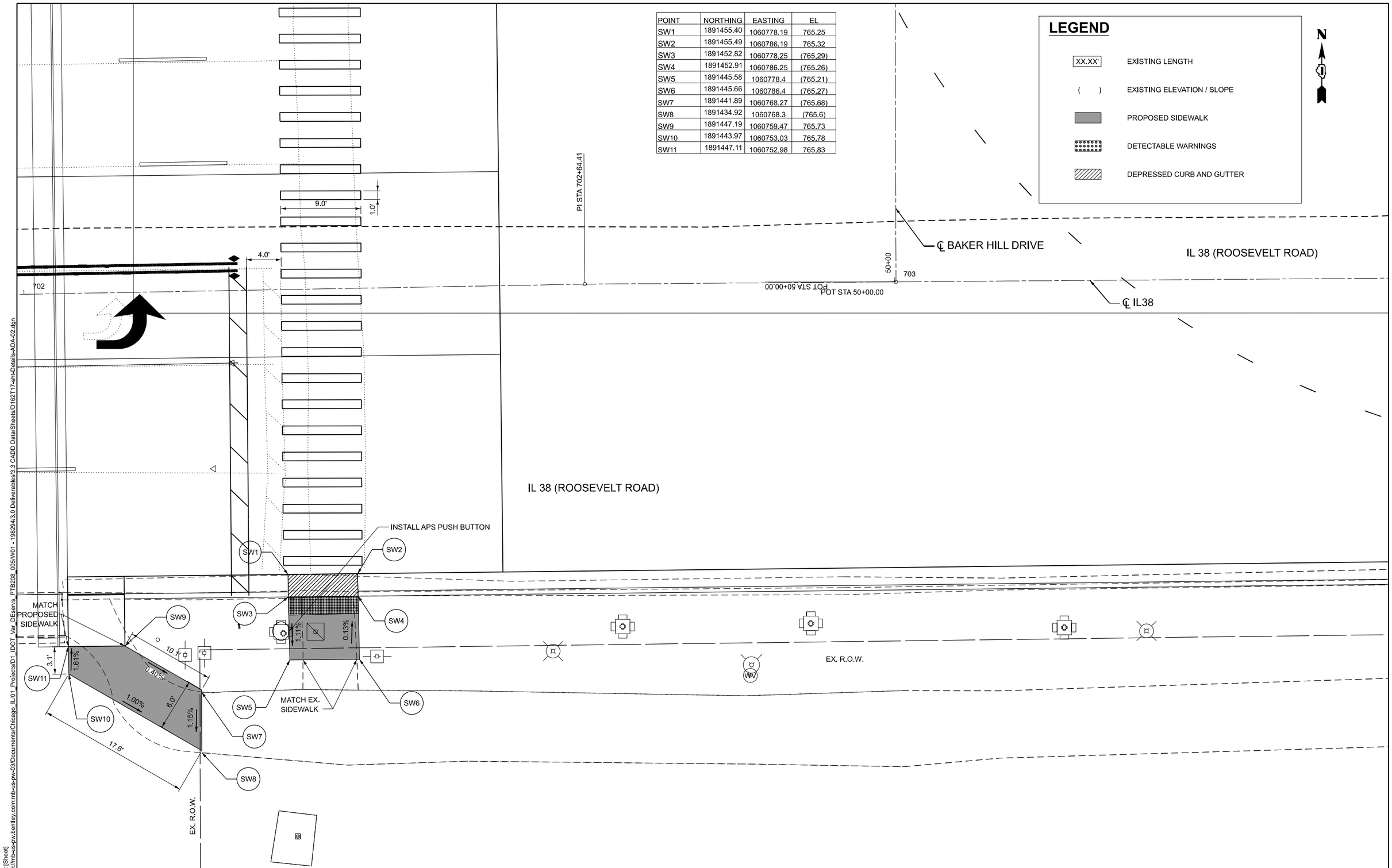

MODEL: ADA-2 [Sheet]
FILE NAME: pw://mb-us-pw.bentley.com:mb-us-pw-03/Documents/Chicago_IL/01_Projects/D1_IDOT_Var_DEservs_PTB208_005/W01 - 198294/3.0 Deliverables/3.3 CADD Data/Sheets/D162717-eht-Details-ADA-02.dgn

Michael Baker INTERNATIONAL
200 West Adams Street, Suite 1800, Chicago, IL 60606
Phone: (312) 707-8770 • MBAKERINTL.COM

USER NAME = Connor.Liss	DESIGNED - ZJT	REVISED -	
	DRAWN - JR	REVISED -	
PLOT SCALE = $SCALE$	CHECKED - RBB	REVISED -	
PLOT DATE = 8/9/2024	DATE - 08/09/2024	REVISED -	

STATE OF ILLINOIS
DEPARTMENT OF TRANSPORTATION

ADA DETAILS
IL 38 (ROOSEVELT ROAD) OVER IL 53

SCALE: 1"=5' | SHEET 2 OF 2 SHEETS | STA. TO STA.

F.A.P. RTE.	SECTION	COUNTY	TOTAL SHEETS	SHEET NO.
0347	0347 22 BJ3	DUPAGE	98	28
		CONTRACT NO. 62T17		
		ILLINOIS	FED. AID PROJECT	

NOTE: PREFORMED PAVEMENT MARKINGS TYPE D AND GROOVING FOR RECESSED PAVEMENT MARKINGS SHALL BE USED FOR ALL LANE LINE PAVEMENT MARKINGS WITHIN PCC AND JOB LIMITS.

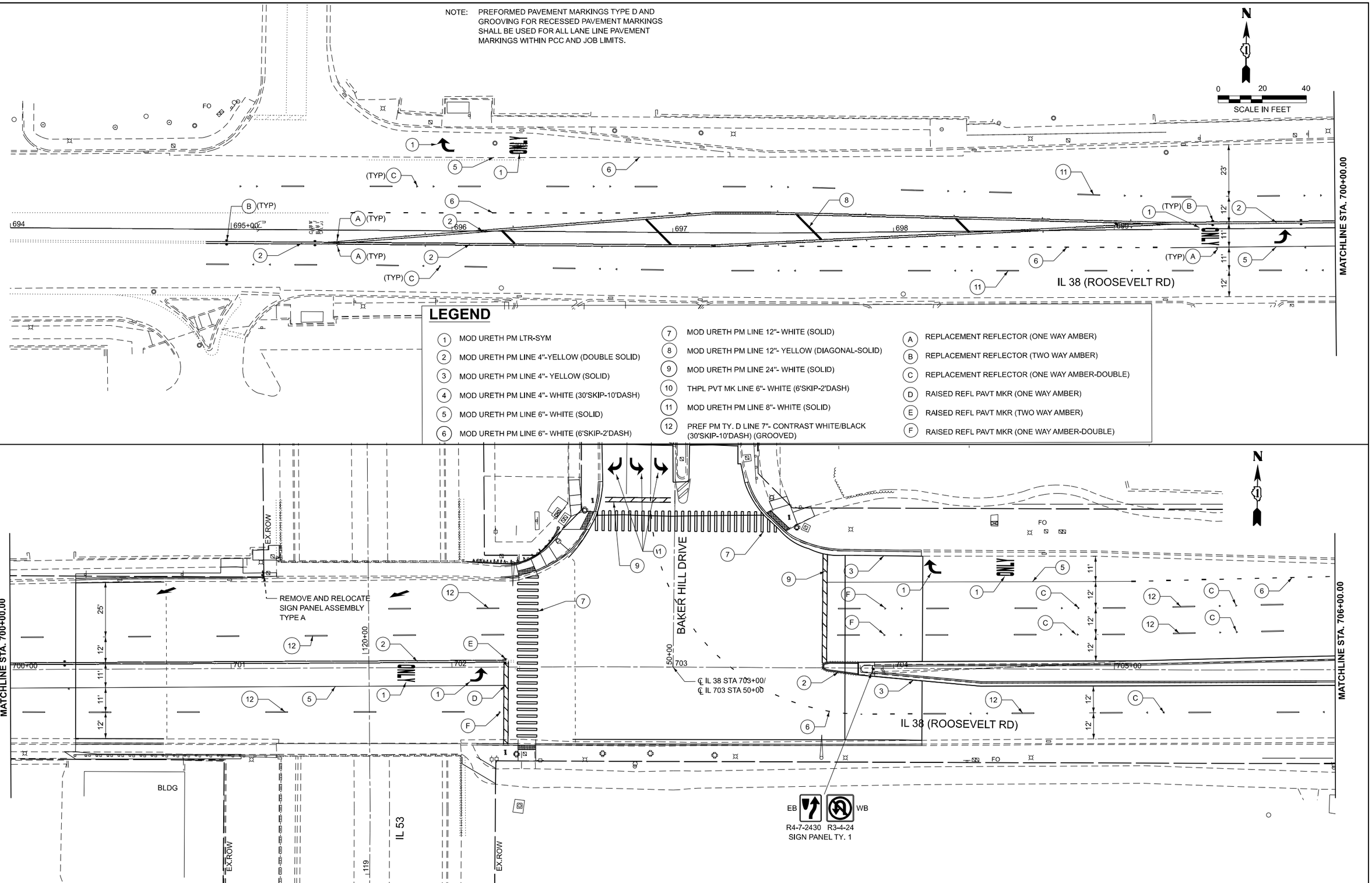

LEGEND

1. MOD URETH PM LTR-SYM
2. MOD URETH PM LINE 4"-YELLOW (DOUBLE SOLID)
3. MOD URETH PM LINE 4"- YELLOW (SOLID)
4. MOD URETH PM LINE 4"- WHITE (30'SKIP-10'DASH)
5. MOD URETH PM LINE 6"- WHITE (SOLID)
6. MOD URETH PM LINE 6"- WHITE (6'SKIP-2'DASH)
7. MOD URETH PM LINE 12"- WHITE (SOLID)
8. MOD URETH PM LINE 12"- YELLOW (DIAGONAL-SOLID)
9. MOD URETH PM LINE 24"- WHITE (SOLID)
10. THPL PVT MK LINE 6"- WHITE (6'SKIP-2'DASH)
11. MOD URETH PM LINE 8"- WHITE (SOLID)
12. PREF PM TY. D LINE 7"- CONTRAST WHITE/BLACK (30'SKIP-10'DASH) (GROOVED)

- A REPLACEMENT REFLECTOR (ONE WAY AMBER)
- B REPLACEMENT REFLECTOR (TWO WAY AMBER)
- C REPLACEMENT REFLECTOR (ONE WAY AMBER-DOUBLE)
- D RAISED REFL PAVT MKR (ONE WAY AMBER)
- E RAISED REFL PAVT MKR (TWO WAY AMBER)
- F RAISED REFL PAVT MKR (ONE WAY AMBER-DOUBLE)

MODEL: PrCL IL38 - Plan 1 [Sheet]
FILE NAME: pw://mb-us-pw.bentley.com:mb-us-pw-03/Documents/Chicago_IL/01_Projects/D1_IDOT_Var_DEservs_PTB208_005/W01 - 19829413.0 Deliverables/3.3 CADD Data/Sheets/D162717-sht-pvmk-01.dgn

Michael Baker INTERNATIONAL
200 West Adams Street, Suite 1800, Chicago, IL 60606
Phone: (312) 707-6770 - MBAKERINTL.COM

USER NAME = Winson.Teng	DESIGNED - ZJT	REVISED -	
	DRAWN - JR	REVISED -	
PLOT SCALE = 0.16666633 ' / in.	CHECKED - RBB	REVISED -	
PLOT DATE = 9/20/2024	DATE - 08/09/2024	REVISED -	

STATE OF ILLINOIS
DEPARTMENT OF TRANSPORTATION

PAVEMENT MARKING PLAN
IL 38 (ROOSEVELT ROAD) OVER IL 53

SCALE: 1"=20' | SHEET 1 OF 3 SHEETS | STA. 694+00.00 TO STA. 706+00.00

F.A.P. RTE.	SECTION	COUNTY	TOTAL SHEETS	SHEET NO.
0347	0347 22 BJ3	DUPAGE	98	29

CONTRACT NO. 62T17

ILLINOIS | FED. AID PROJECT

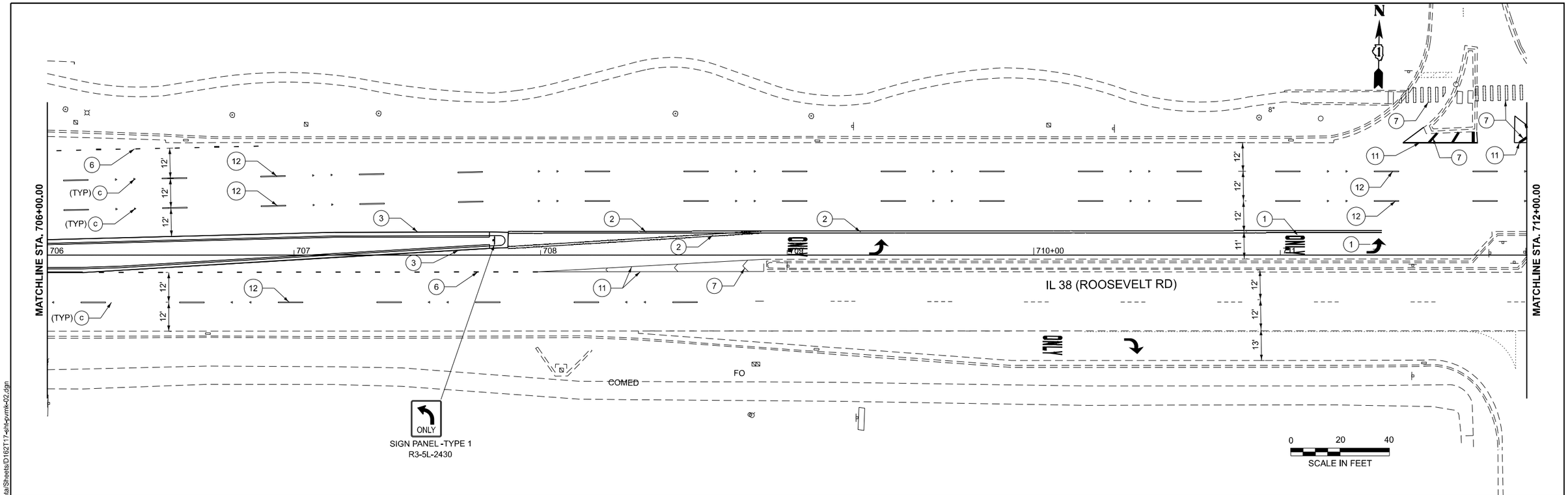

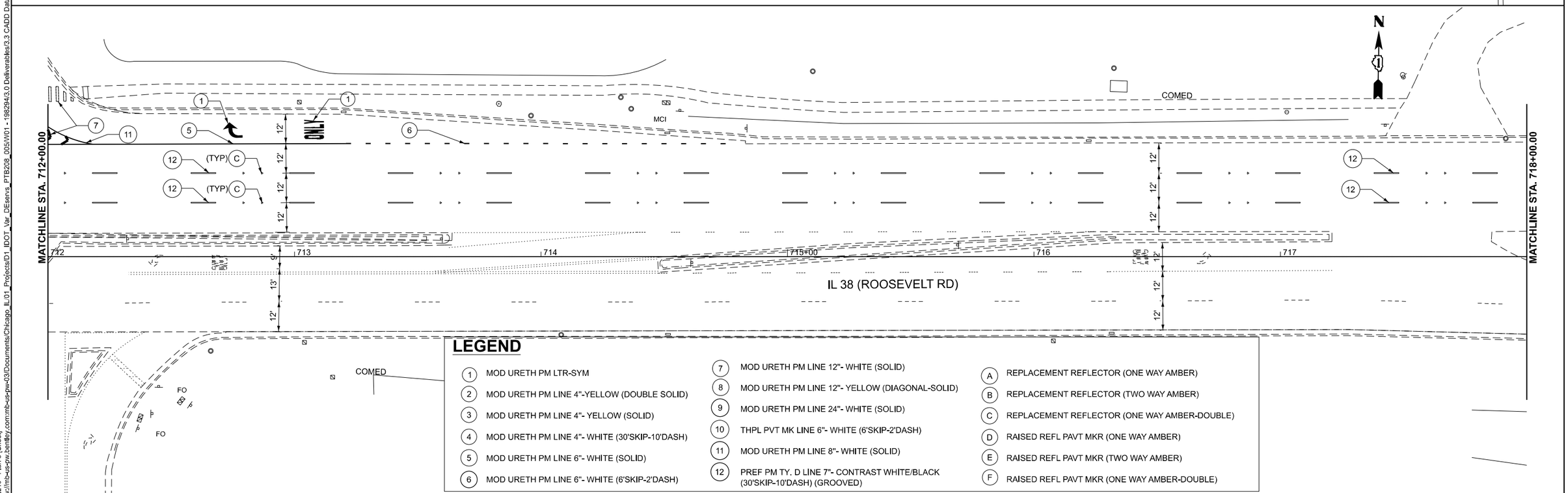

LEGEND

1. MOD URETH PM LTR-SYM
2. MOD URETH PM LINE 4"-YELLOW (DOUBLE SOLID)
3. MOD URETH PM LINE 4"- YELLOW (SOLID)
4. MOD URETH PM LINE 4"- WHITE (30'SKIP-10'DASH)
5. MOD URETH PM LINE 6"- WHITE (SOLID)
6. MOD URETH PM LINE 6"- WHITE (6'SKIP-2'DASH)
7. MOD URETH PM LINE 12"- WHITE (SOLID)
8. MOD URETH PM LINE 12"- YELLOW (DIAGONAL-SOLID)
9. MOD URETH PM LINE 24"- WHITE (SOLID)
10. THPL PVT MK LINE 6"- WHITE (6'SKIP-2'DASH)
11. MOD URETH PM LINE 8"- WHITE (SOLID)
12. PREF PM TY. D LINE 7"- CONTRAST WHITE/BLACK (30'SKIP-10'DASH) (GROOVED)

A. REPLACEMENT REFLECTOR (ONE WAY AMBER)
B. REPLACEMENT REFLECTOR (TWO WAY AMBER)
C. REPLACEMENT REFLECTOR (ONE WAY AMBER-DOUBLE)
D. RAISED REFL PAVT MKR (ONE WAY AMBER)
E. RAISED REFL PAVT MKR (TWO WAY AMBER)
F. RAISED REFL PAVT MKR (ONE WAY AMBER-DOUBLE)

MODEL: PrCL IL40 - Plan 3 [Sheet]
FILE NAME: pw://mb-us-pw.bentley.com:mb-us-pw-03/Documents/Chicago_IL/01_Projects/D1_IDOT_Var_DEserv_PTB208_005/W01 - 198294.3.0 Deliverables/3.3 CADD Data/Sheets/D162T17-sht-pvmk-02.dgn

Michael Baker INTERNATIONAL
200 West Adams Street, Suite 1800, Chicago, IL 60606
Phone: (312) 707-8770 • MBAKERINTL.COM

USER NAME = Winson.Teng	DESIGNED - ZJT	REVISED -	
	DRAWN - JR	REVISED -	
PLOT SCALE = 0.16666633 ' / in.	CHECKED - RBB	REVISED -	
PLOT DATE = 9/20/2024	DATE - 08/09/2024	REVISED -	

STATE OF ILLINOIS
DEPARTMENT OF TRANSPORTATION

PAVEMENT MARKING PLAN
IL 38 (ROOSEVELT ROAD) OVER IL 53

SCALE: 1"=20' | SHEET 2 OF 3 SHEETS | STA. 706+00.00 TO STA. 718+00.00

F.A.P. RTE.	SECTION	COUNTY	TOTAL SHEETS	SHEET NO.
0347	0347 22 BJ3	DUPAGE	98	30
		CONTRACT NO. 62T17		
		ILLINOIS	FED. AID PROJECT	

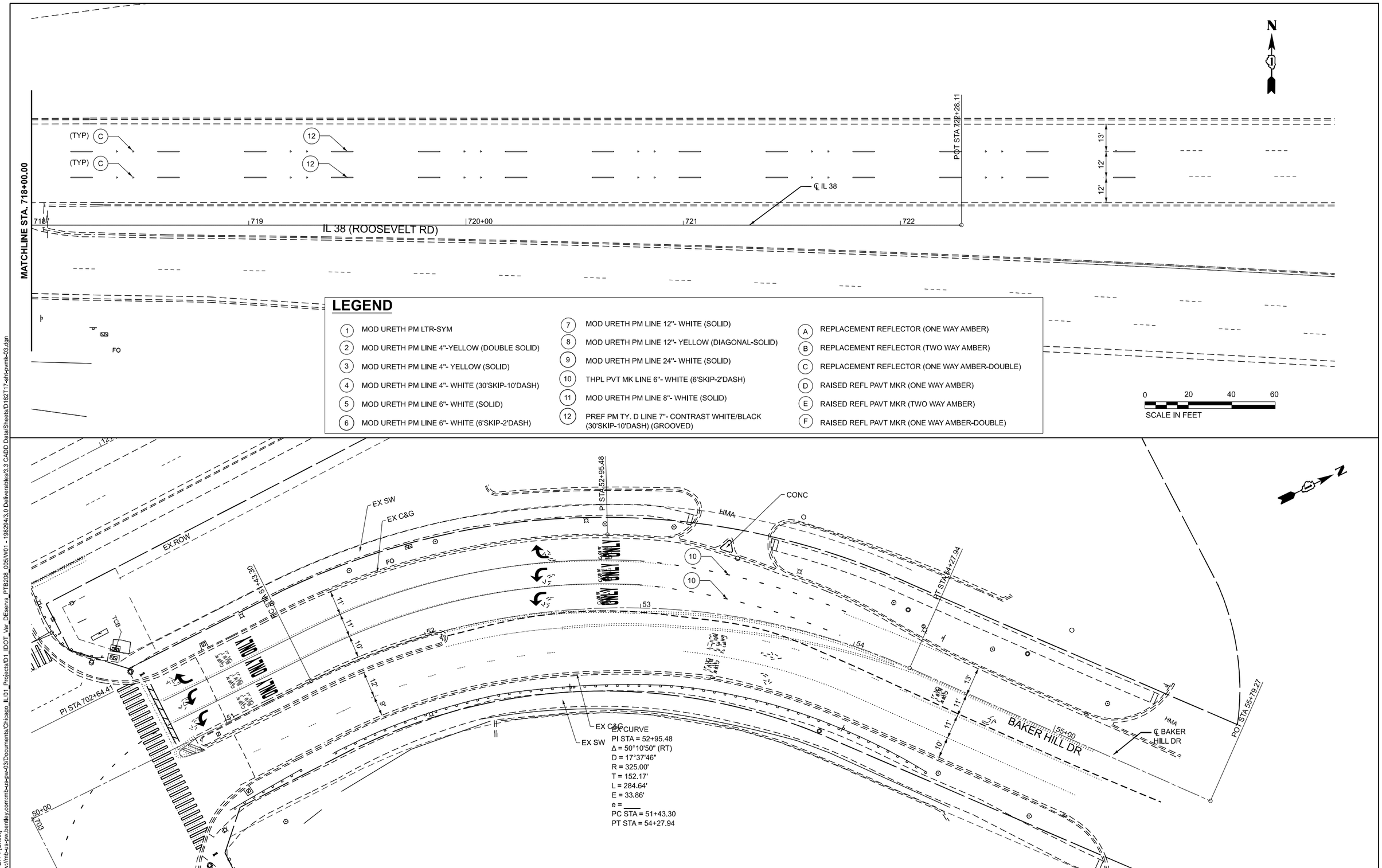

LEGEND

1. MOD URETH PM LTR-SYM
2. MOD URETH PM LINE 4"-YELLOW (DOUBLE SOLID)
3. MOD URETH PM LINE 4"- YELLOW (SOLID)
4. MOD URETH PM LINE 4"- WHITE (30'SKIP-10'DASH)
5. MOD URETH PM LINE 6"- WHITE (SOLID)
6. MOD URETH PM LINE 6"- WHITE (6'SKIP-2'DASH)
7. MOD URETH PM LINE 12"- WHITE (SOLID)
8. MOD URETH PM LINE 12"- YELLOW (DIAGONAL-SOLID)
9. MOD URETH PM LINE 24"- WHITE (SOLID)
10. THPL PVT MK LINE 6"- WHITE (6'SKIP-2'DASH)
11. MOD URETH PM LINE 8"- WHITE (SOLID)
12. PREF PM TY. D LINE 7"- CONTRAST WHITE/BLACK (30'SKIP-10'DASH) (GROOVED)

- (A) REPLACEMENT REFLECTOR (ONE WAY AMBER)
- (B) REPLACEMENT REFLECTOR (TWO WAY AMBER)
- (C) REPLACEMENT REFLECTOR (ONE WAY AMBER-DOUBLE)
- (D) RAISED REFL PAVT MKR (ONE WAY AMBER)
- (E) RAISED REFL PAVT MKR (TWO WAY AMBER)
- (F) RAISED REFL PAVT MKR (ONE WAY AMBER-DOUBLE)

MODEL: STG3-BH-1 [Sheet]
FILE NAME: pw://mb-us-pw.bentley.com:mb-us-pw-03/Documents/Chicago_IL/01_Projects/D1_IDOT_Var_DEservs_PTB208_005/W01 - 198294/3.0 Deliverables/3.3 CADD Data/Sheets/D162117-sht-pvmk-03.dgn

Michael Baker INTERNATIONAL
200 West Adams Street, Suite 1800, Chicago, IL 60606
Phone: (312) 707-8770 • MBAKERINTL.COM

USER NAME = Connor.Liss	DESIGNED - ZJT	REVISED -	
	DRAWN - JR	REVISED -	
PLOT SCALE = 0.16666633 ' / in.	CHECKED - RBB	REVISED -	
PLOT DATE = 8/9/2024	DATE - 08/09/2024	REVISED -	

STATE OF ILLINOIS
DEPARTMENT OF TRANSPORTATION

PAVEMENT MARKING PLAN
IL 38 (ROOSEVELT ROAD) OVER IL 53

SCALE: 1"=20' | SHEET 3 OF 3 SHEETS | STA. 00+00.00 TO STA. 00+00.00

F.A.P RTE.	SECTION	COUNTY	TOTAL SHEETS	SHEET NO.
0347	0347 22 BJ3	DUPAGE	98	31

CONTRACT NO. 62T17

ILLINOIS | FED. AID PROJECT

TRAFFIC SIGNAL LEGEND

(NOT TO SCALE)

ITEM	EXISTING	PROPOSED
CONTROLLER CABINET		
COMMUNICATION CABINET	CC	CC
MASTER CONTROLLER	MC	MC
MASTER MASTER CONTROLLER	MMC	MMC
UNINTERRUPTABLE POWER SUPPLY		
SERVICE INSTALLATION -(P) POLE MOUNTED	P	P
SERVICE INSTALLATION -(G) GROUND MOUNTED -(GM) GROUND MOUNTED METERED	G GM	G GM
TELEPHONE CONNECTION	T	T
STEEL MAST ARM ASSEMBLY AND POLE		
ALUMINUM MAST ARM ASSEMBLY AND POLE		
STEEL COMBINATION MAST ARM ASSEMBLY AND POLE WITH LUMINAIRE		
SIGNAL POST -(BM) BARREL MOUNTED - TEMPORARY		BM
WOOD POLE		
GUY WIRE		
SIGNAL HEAD		
SIGNAL HEAD WITH BACKPLATE		
SIGNAL HEAD OPTICALLY PROGRAMMED	P P	P P
FLASHER INSTALLATION -(FS) SOLAR POWERED	F FS F FS	F FS F FS
PEDESTRIAN SIGNAL HEAD		
PEDESTRIAN PUSH BUTTON -(APS) ACCESSIBLE PEDESTRIAN PUSH BUTTON	APS	APS
RADAR DETECTION SENSOR	R	R
VIDEO DETECTION CAMERA	V	V
RADAR/VIDEO DETECTION ZONE		
PAN, TILT, ZOOM (PTZ) CAMERA	PTZ	PTZ
EMERGENCY VEHICLE LIGHT DETECTOR		
CONFIMATION BEACON		
WIRELESS INTERCONNECT		
WIRELESS INTERCONNECT RADIO REPEATER	ERR	RR

ITEM	EXISTING	PROPOSED
HANDHOLE -SQUARE -ROUND		
HEAVY DUTY HANDHOLE -SQUARE -ROUND	H H	H H
DOUBLE HANDHOLE		
JUNCTION BOX		
RAILROAD CANTILEVER MAST ARM		
RAILROAD FLASHING SIGNAL		
RAILROAD CROSSING GATE		
RAILROAD CROSSBUCK		
RAILROAD CONTROLLER CABINET		
UNDERGROUND CONDUIT (UC), GALVANIZED STEEL		
TEMPORARY SPAN WIRE, TETHER WIRE, AND CABLE		
SYSTEM ITEM	S	SP
INTERSECTION ITEM	I	IP
REMOVE ITEM		R
RELOCATE ITEM		RL
ABANDON ITEM		A
CONTROLLER CABINET AND FOUNDATION TO BE REMOVED		RCF
MAST ARM POLE AND FOUNDATION TO BE REMOVED		RMF
SIGNAL POST AND FOUNDATION TO BE REMOVED		RPF
DETECTOR LOOP, TYPE I		
PREFORMED DETECTOR LOOP	P P	P P
SAMPLING (SYSTEM) DETECTOR	S S	S S
INTERSECTION AND SAMPLING (SYSTEM) DETECTOR	IS IS	IS IS
QUEUE AND SAMPLING (SYSTEM) DETECTOR	QS QS	QS QS
WIRELESS DETECTOR SENSOR	W	W
WIRELESS ACCESS POINT		

ITEM	EXISTING	PROPOSED
SIGNAL HEAD -(P) PROGRAMMABLE SIGNAL HEAD	P	P
SIGNAL HEAD WITH BACKPLATE -(P) PROGRAMMABLE SIGNAL HEAD -(RB) RETROREFLECTIVE BACKPLATE	P RB	P RB
PEDESTRIAN SIGNAL HEAD AT RAILROAD INTERSECTIONS		
PEDESTRIAN SIGNAL HEAD WITH COUNTDOWN TIMER	C D	C D
ILLUMINATED SIGN "NO LEFT TURN"/"NO RIGHT TURN"		
NUMBER OF CONDUCTORS, ELECTRIC CABLE NO. 14, UNLESS NOTED OTHERWISE. ALL DETECTOR LOOP CABLE TO BE SHIELDED	5	5
GROUND CABLE IN CONDUIT, NO. 6 SOLID COPPER (GREEN)	1#6	1#6
ELECTRIC CABLE IN CONDUIT, TRACER NO. 14 1/C	1	1
COAXIAL CABLE	C	C
VENDOR CABLE	V	V
COPPER INTERCONNECT CABLE, NO. 18, 3 PAIR TWISTED, SHIELDED	6#18	6#18
FIBER OPTIC CABLE -NO. 62.5/125, MM12F -NO. 62.5/125, MM12F SM12F -NO. 62.5/125, MM12F SM24F	12F 24F 36F	12F 24F 36F
GROUND ROD -(C) CONTROLLER -(M) MAST ARM -(P) POST -(S) SERVICE	C M P S	C M P S

TS SHT NO. 1

MODEL: TS-05a [Sheet]
FILE NAME: pw://mb-us-pw.bentley.com:mb-us-pw-03/Documents/Chicago_IL/01_Projects/D1_IDOT_Var_DEservs_PTB208_005/W01 - 198294/3.0 Deliverables/3.3 CADD Data/Sheets/D162117-eht-ts05a.dgn

Michael Baker INTERNATIONAL
200 West Adams Street, Suite 1800, Chicago, IL 60606
Phone: (312) 707-8770 • MBAKERINTL.COM

USER NAME = Connor.Liss	DESIGNED - IP	REVISED -	
	DRAWN - IP	REVISED -	
PLOT SCALE = 0.16666633 ' / in.	CHECKED - LP	REVISED -	
PLOT DATE = 8/9/2024	DATE - 09/29/2016	REVISED -	

STATE OF ILLINOIS
DEPARTMENT OF TRANSPORTATION

DISTRICT ONE
STANDARD TRAFFIC SIGNAL DESIGN DETAILS

SCALE: NONE | SHEET 1 OF 7 SHEETS | STA. TO STA.

F.A.P. RTE.	SECTION	COUNTY	TOTAL SHEETS	SHEET NO.
0347	0347 22 BJ3	DUPAGE	98	32
		CONTRACT NO. 62T17		
TS-05	ILLINOIS	FED. AID PROJECT		

LOOP DETECTOR NOTES

1. EACH PAIR OF LOOP WIRES SHALL BE PLACED IN A SEPARATE EMPTY COILABLE NONMETALLIC CONDUIT FROM THE EDGE OF PAVEMENT TO THE HANDHOLE. SPACING BETWEEN THE HOLES DRILLED IN THE PAVEMENT SHALL NOT BE LESS THAN 6" (150 mm). EMPTY COILABLE NONMETALLIC CONDUIT SHALL BE INCLUDED IN THE COST OF THE LOOP WIRE.

2. THE NUMBER OF LOOP TURNS SHALL BE AS RECOMMENDED BY THE AMPLIFIER MANUFACTURER. ALL ADJACENT SIDES OF THE LOOPS SHALL BE INSTALLED IN SUCH A WAY THAT THE CURRENT FLOW IS IN THE SAME DIRECTION TO REINFORCE ITS MAGNETIC FIELDS FOR SMALL VEHICLE DETECTION.

3. EACH LOOP LEAD-IN SHALL BE IDENTIFIED AND PERMANENTLY TAGGED IN THE HANDHOLE. EACH LEAD-IN CABLE TAG SHALL INDICATE THE LOCATION OF THE LOOP, LOOP ROTATION (CLOCKWISE/COUNTERCLOCKWISE), LOOP LEAD-IN DIRECTION (IN OR OUT), LOOP CABLE NUMBER AND LOCATION IN CABINET, AND NUMBER OF TURNS IN THE DETECTOR LOOPS IN WATER PROOF INK AS INDICATED ON THE DISTRICT 1 STANDARD TRAFFIC SIGNAL DESIGN DETAIL. THE CONTRACTOR SHALL MARK LOOP LOCATIONS ON RECORD DRAWINGS AND PRESENT TO THE ENGINEER AFTER FINAL INSPECTION. LOOPS SHALL BE MARKED BY LANE AND LOOP NUMBER. SEE DETAIL BELOW.

4. ALL LOOP CABLE SHALL BE FASTENED WITH PLASTIC TIE WRAP TO THE HANDHOLE HOOKS.

5. IN ASPHALT PAVEMENT, LOOPS SHOULD BE PLACED IN THE BINDER AND DIVEHOLES MARKED AT THE CURB WITH A SAW-CUT. THE SAW-CUT SHALL BE CUT IN ACCORDANCE WITH LOCAL AND E.P.A. DUST CONTROL REQUIREMENTS. DETECTOR LOOP(S) SHALL NOT BE INSTALLED IN WET CONDITIONS AND THE SAW-CUTS MUST BE FREE OF DEBRIS AND RESIDUE SUCH AS DUST AND WATER WHICH IS TO BE ACHIEVED BY THE USE OF COMPRESSED AIR, WIRE BRUSHING AND HEAT DRYING ACCORDING TO SEALANT MANUFACTURER REQUIREMENTS. THE DETECTOR WIRE SHALL BE HELD IN PLACE BY THE USE OF FORM WEDGES. WEDGES SHALL BE SPACED NO MORE THAN 18" (450 mm) APART.

6. LOOP SPLICES SHALL BE SOLDERED USING A SOLDERING IRON. BLOW TORCHES OR OTHER DEVICES WHICH OXIDIZE COPPER CABLE SHALL NOT BE ALLOWED FOR SOLDERING OPERATIONS. SEE DETAIL BELOW RIGHT.

7. PREFORMED DETECTOR LOOPS SHALL BE USED, AS SHOWN ON THE PLANS, WHERE NEW CONCRETE PAVEMENT IS PROPOSED. THE INSTALLATION OF PREFORMED LOOPS SHALL BE IN ACCORDANCE WITH THE DISTRICT 1 SPECIFICATIONS OR AS DIRECTED BY THE ENGINEER.

LOOP LEAD-IN CABLE TAG

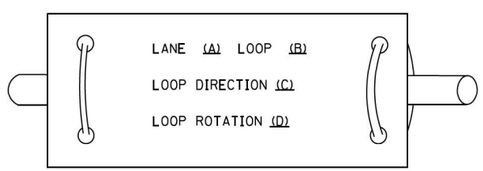

A. LANE 1 IS THE LANE CLOSEST TO THE CENTERLINE OF THE ROADWAY

B. LOOP #1 IS THE LOOP IN THE LANE CLOSEST TO THE INTERSECTION.

C. LABEL LOOP CABLE "IN" OR LOOP CABLE "OUT".

D. LABEL LOOP CABLE CLOCKWISE OR LOOP CABLE COUNTERCLOCKWISE.

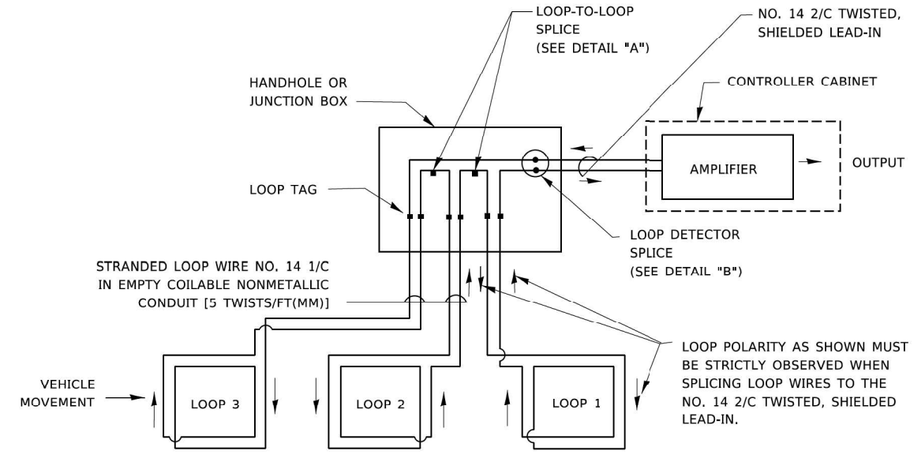

DETECTOR LOOP WIRING SCHEMATIC

- LOOPS SHALL BE SPLICED IN SERIES. SAW-CUTS SHALL BE A MINIMUM WIDTH OF 5/16" (8 mm).
- SAW-CUT DEPTHS SHALL BE 3" (75 mm). IF IN CONCRETE,
- THE SAW-CUT DEPTH SHALL BE TO THE TOP OF THE REINFORCEMENT.
- LOOP CORNERS SHALL BE DRILLED WITH A 2" (50 mm) DIAMETER CORE.

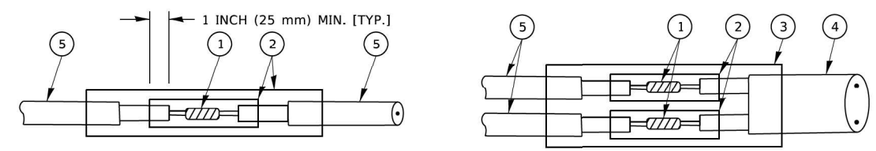

DETAIL "A"
LOOP-TO-LOOP SPLICE

DETAIL "B"
LOOP-TO-CONTROLLER SPLICE

TYPE I LOOP

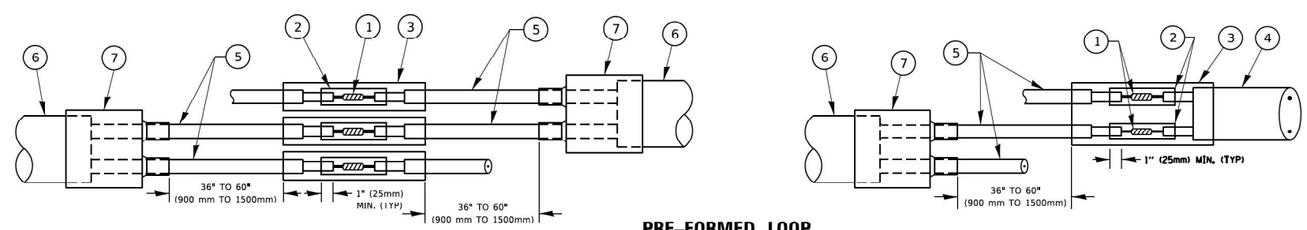

DETAIL "A"
LOOP-TO-LOOP SPLICE

PRE-FORMED LOOP

DETAIL "B"
LOOP-TO-CONTROLLER SPLICE

LOOP DETECTOR SPLICE

1. WESTERN UNION SPLICE SOLDERED WITH ROSIN CORE FLUX. ALL EXPOSED SURFACES OF THE SOLDER SHALL BE SMOOTH. THE WESTERN UNION SPLICES SHALL BE STAGGERED.
2. WCSMW 30/100 HEAT SHRINK TUBE, MINIMUM LENGTH 3" (75 mm), UNDERWATER GRADE.
3. WCS 200/750 HEAT SHRINK TUBE, MINIMUM LENGHT 6" (150 mm), UNDERWATER GRADE.
4. NO. 14 2/C TWISTED, SHIELDED CABLE.
5. LOOP CONDUCTOR WITH FLEXIBLE PLASTIC TUBE. PRE-FORMED LOOP
6. XL POLYOLEFIN 2 CONDUCTOR
7. BREAKOUT SEALS, TYCO CBR-2 OR APPROVED EQUAL

TS SHT NO. 2

MODEL: TS-05b [Sheet]
FILE NAME: pw://mb-us-pw.bentley.com:mb-us-pw-03/Documents/Chicago_IL/01_Projects/D1_IDOT_Var_DEservs_PTB208_005/W01 - 198294/3.0 Deliverables/3.3 CADD Data/Sheets/D162717-sht-ts05b.dgn

Michael Baker INTERNATIONAL
200 West Adams Street, Suite 1800, Chicago, IL 60606
Phone: (312) 707-8770 · MBAKERINTL.COM

USER NAME = Connor.Liss	DESIGNED -	REVISED -	
	DRAWN -	REVISED -	
PLOT SCALE = 0.16666633 ' / in.	CHECKED -	REVISED -	
PLOT DATE = 8/9/2024	DATE -	REVISED -	

STATE OF ILLINOIS
DEPARTMENT OF TRANSPORTATION

DISTRICT ONE
STANDARD TRAFFIC SIGNAL DESIGN DETAILS

SCALE: NONE | SHEET 2 OF 7 SHEETS | STA. | TO STA.

F.A.P. RTE.	SECTION	COUNTY	TOTAL SHEETS	SHEET NO.
0347	0347 22 BJ3	DUPAGE	98	33
		CONTRACT NO. 62T17		
TS-05	ILLINOIS	FED. AID PROJECT		

TRAFFIC SIGNAL MAST ARM AND SIGNAL POST

MAST ARM MOUNTED SIGNALS IN EXISTING, PROPOSED OR FUTURE SIDEWALK/BICYCLE PATH AREA. INTERSECTION SHOWN WITH PEDESTRIAN SIGNALS AND PEDESTRIAN PUSHBUTTON DETECTORS.

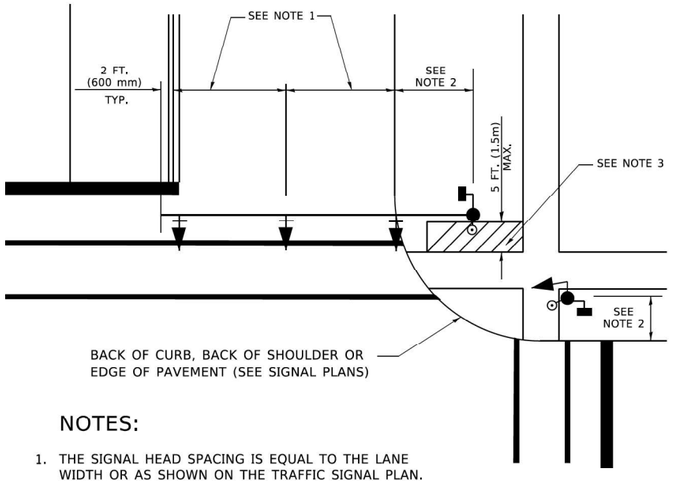

NOTES:

1. THE SIGNAL HEAD SPACING IS EQUAL TO THE LANE WIDTH OR AS SHOWN ON THE TRAFFIC SIGNAL PLAN.
2. REFER TO THE TRAFFIC SIGNAL EQUIPMENT OFFSET TABLE.
3. PROVIDE A LEVEL ALL-WEATHER SURFACE (CONCRETE SIDEWALK, ASPHALT BICYCLE PATH SURFACE OR MATCHING MATERIAL TO THE ADJACENT SURFACE) UP TO THE MAST ARM SHAFT OR THE SIGNAL POST.
4. THE FACE OF THE PEDESTRIAN PUSHBUTTON SHALL BE PARALLEL TO THE CROSSWALK TO BE USED.
5. THE LOCATIONS AND INSTALLATION OF PEDESTRIAN SIGNAL HEADS AND PEDESTRIAN PUSHBUTTONS SHALL MEET THE REQUIREMENTS OF THE MUTCD AND INFORMATION FOUND IN THE "AMERICANS WITH DISABILITIES ACT ACCESSIBILITY GUIDELINES FOR BUILDINGS AND FACILITIES."

PEDESTRIAN SIGNAL POST AND PEDESTRIAN PUSH BUTTON POST

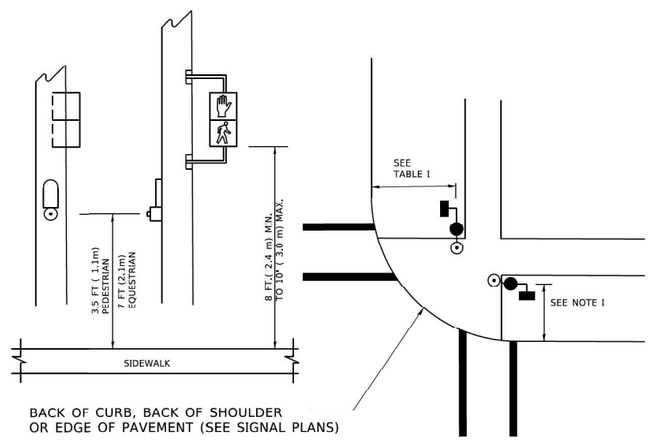

NOTES:

1. REFER TO THE TRAFFIC SIGNAL EQUIPMENT OFFSET TABLE.
2. PROVIDE A LEVEL ALL-WEATHER SURFACE (CONCRETE SIDEWALK, ASPHALT BICYCLE PATH SURFACE OR MATCHING MATERIAL TO THE ADJACENT SURFACE) UP TO THE PEDESTRIAN SIGNAL POST OR THE PEDESTRIAN PUSH BUTTON POST.
3. THE FACE OF THE PEDESTRIAN PUSHBUTTON SHALL BE PARALLEL TO THE CROSSWALK TO BE USED.
4. THE LOCATIONS AND INSTALLATION OF PEDESTRIAN SIGNAL HEADS AND PEDESTRIAN PUSHBUTTONS SHALL MEET THE REQUIREMENTS OF THE MUTCD AND INFORMATION FOUND IN THE "AMERICANS WITH DISABILITIES ACT ACCESSIBILITY GUIDELINES FOR BUILDINGS AND FACILITIES."

RECOMMENDED PUSHBUTTON LOCATIONS

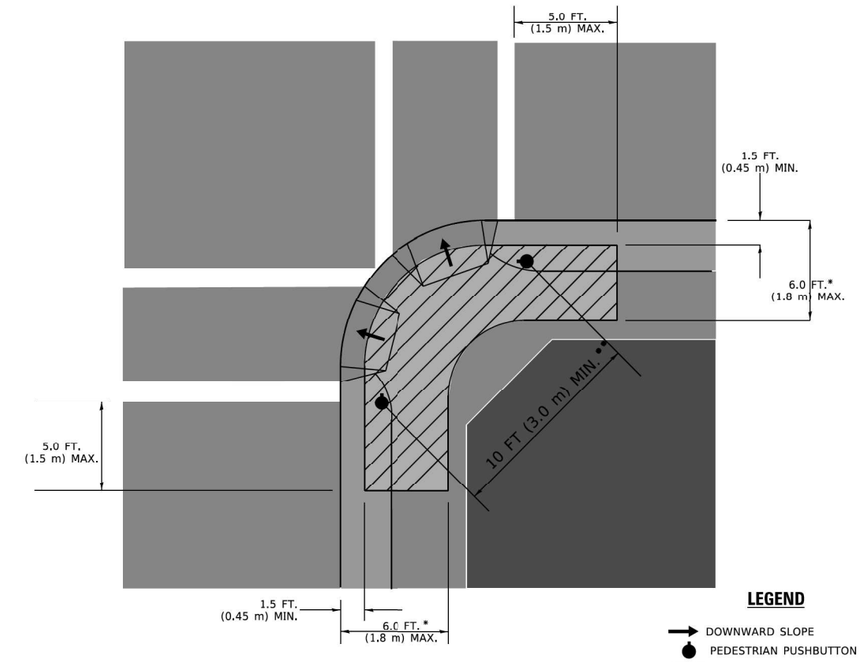

* WHERE THERE ARE CONSTRAINTS THAT MAKE IT IMPRACTICAL TO PLACE THE PEDESTRIAN PUSHBUTTON BETWEEN 1.5 FT (0.45 m) AND 6 FT (1.8 m) FROM THE EDGE OF THE CURB, SHOULDER, OR PAVEMENT, IT SHOULD NOT BE FURTHER THAN 10 FT (3 m) FROM THE EDGE OF CURB, SHOULDER, OR PAVEMENT.

** WHERE THERE ARE CONSTRAINTS ON A PARTICULAR CORNER THAT MAKE IT IMPRACTICAL TO PROVIDE THE 10 FT (3 m) SEPERATION BETWEEN THE TWO PEDESTRIAN PUSHBUTTONS, THE PUSHBUTTONS MAY BE PLACED CLOSER TOGETHER OR ON THE SAME POLE.

NOTES:

1. PEDESTRIAN SIGNAL HEADS SHALL BE MOUNTED WITH THE BOTTOM OF THE SIGNAL HOUSING INCLUDING BRACKETS NOT LESS THAN 8 FT (2.4 m) OR MORE THAN 10 FT (3 m) ABOVE SIDEWALK LEVEL, AND SHALL BE POSITIONED AND ADJUSTED TO PROVIDE MAXIMUM VISIBILITY AT THE BEGINNING OF THE CONTROLLED CROSSWALK.
2. THE BOTTOM OF THE SIGNAL HOUSING (INCLUDING BRACKETS) OF A VEHICULAR SIGNAL FACE THAT IS NOT LOCATED OVER A HIGHWAY SHALL BE AT LEAST 8 FT (2.4 m) BUT NOT MORE THAN 19 FT (5.8 m) ABOVE THE SIDEWALK OR, IF THERE IS NO SIDEWALK, ABOVE THE PAVEMENT GRADE AT THE CENTER OF THE ROADWAY.
3. THE BOTTOM OF THE SIGNAL HOUSING AND ANY RELATED ATTACHMENTS TO A SIGNAL FACE LOCATED OVER ANY PORTION OF A HIGHWAY SHALL BE ACCORDING TO CURRENT STATE STANDARDS 877001, 877002, 877006, 877011 AND 877012 WITH A MINIMUM OF 16 FT (5.0 m) AND A MAXIMUM OF 18 FT. (5.5 m) FROM THE HIGHEST POINT OF PAVEMENT.
4. THE BOTTOM OF THE TEMPORARY SPAN WIRE MOUNTED SIGNAL HOUSING AND ANY RELATED ATTACHMENTS TO A SIGNAL FACE LOCATED OVER ANY PORTION OF A HIGHWAY SHALL BE ACCORDING TO CURRENT STATE STANDARD 880001 WITH A MINIMUM OF 17 FT (5.18 m) FROM THE HIGHEST POINT OF PAVEMENT.
5. THE TOP OF THE SIGNAL HOUSING OF A SIGNAL FACE LOCATED OVER ANY PORTION OF A HIGHWAY SHALL NOT BE MORE THAN 25.6 FT (7.8 m) ABOVE THE PAVEMENT.

TRAFFIC SIGNAL EQUIPMENT OFFSET

TRAFFIC SIGNAL EQUIPMENT	COMBINATION CONCRETE CURB AND GUTTER (MINIMUM DISTANCE FROM BACK OF CURB TO CENTERLINE OF FOUNDATION)	SHOULDER/NON-CURBED AREA (MINIMUM DISTANCE FROM EDGE OF PAVEMENT TO CENTERLINE OF FOUNDATION)
TRAFFIC SIGNAL MAST ARM POLE	6 FT (1.8m)	SHOULDER WIDTH + 2 FT (0.6m), MINIMUM 10 FT (3.0m)
TRAFFIC SIGNAL POST	4 FT (1.2m)	SHOULDER WIDTH + 2 FT (0.6m), MINIMUM 10 FT (3.0m)
PEDESTRIAN SIGNAL POST	4 FT (1.2m)	SHOULDER WIDTH + 2 FT (0.6m), MINIMUM 10 FT (3.0m)
PEDESTRIAN PUSHBUTTON POST	4 FT (1.2m)	SHOULDER WIDTH + 2 FT (0.6m), MINIMUM 10 FT (3.0m)
TEMPORARY WOOD POLE	6 FT (1.8m)	SHOULDER WIDTH + 2 FT (0.6m), MINIMUM 10 FT (3.0m)
CONTROLLER CABINET	6 FT (1.8m) MINIMUM DISTANCE SEE NOTE 2	SHOULDER WIDTH + 6 FT (1.8m), MINIMUM 16 FT (4.9m) SEE NOTE 3.
SERVICE INSTALLATION, GROUND MOUNT	6 FT (1.8m) MINIMUM DISTANCE SEE NOTE 2	SHOULDER WIDTH + 6 FT (1.8m), MINIMUM 16 FT (4.9m) SEE NOTE 3.

NOTES:

1. CONTACT THE "AREA TRAFFIC SIGNAL MAINTENANCE AND OPERATIONS ENGINEER" FOR ASSISTANCE IN LOCATING THE TRAFFIC SIGNAL EQUIPMENT WHEN THERE ARE CONFLICTS WITH DITCHES OR THE MINIMUM OFFSET DISTANCES CANNOT BE MET.
2. MINIMUM DISTANCE FROM THE BACK OF CURB TO THE ROADWAY SIDE OF THE FOUNDATION.
3. MINIMUM DISTANCE FROM THE EDGE OF PAVEMENT TOTHE ROADWAY SIDE OF THE FOUNDATION.
4. ANY CHANGES TO THE OFFSETS OF THE FOUNDATIONS. FROM THE MINIMUM DISTANCES LISTED IN THE "TRAFFIC SIGNAL EQUIPMENT OFFSET" CHART AND THE TRAFFIC SIGNAL INSTALLATION PLAN, COULD EFFECT THE PLACEMENT OF THE SIGNAL HEADS, PEDESTRIAN SIGNAL HEADS AND THE PEDESTRIAN PUSHBUTTONS. THE SIGNAL HEAD PLACEMENT ON THE MAST ARMS SHALL REMAIN AS PER THE TRAFFIC SIGNAL INSTALLATION PLAN AND THE "TRAFFIC SIGNAL MAST ARM AND SIGNAL POST" DETAIL ABOVE. THE PROPOSED MAST ARM LENGTHS MAY NEED TO BE REVISED TO MEET THE ABOVE REQUIREMENTS. THE PEDESTRIAN SIGNAL HEADS AND PEDESTRIAN PUSHBUTTONS MUST MEET THE REQUIREMENTS UNDER THE DETAILS ON THIS SHEET.

TS SHT NO. 3

MODEL: TS-05c [Sheet]
FILE NAME: pw://mb-us-pw.bentley.com:mb-us-pw-03/Documents/Chicago_IL/01_Projects/D1_IDOT_Var_DServs_PTB208_005/W01 - 198294/3.0 Deliverables/3.3 CADD Data/Sheets/D162T17-eht-ts05c.dgn

Michael Baker INTERNATIONAL
200 West Adams Street, Suite 1800, Chicago, IL 60606
Phone: (312) 707-8770 • MBAKERINTL.COM

USER NAME = Connor.Liss	DESIGNED -	REVISED -	
	DRAWN -	REVISED -	
PLOT SCALE = 0.16666633 ' / in.	CHECKED -	REVISED -	
PLOT DATE = 8/9/2024	DATE -	REVISED -	

STATE OF ILLINOIS
DEPARTMENT OF TRANSPORTATION

DISTRICT ONE
STANDARD TRAFFIC SIGNAL DESIGN DETAILS

SCALE: NONE | SHEET 3 OF 7 SHEETS | STA. TO STA.

F.A.P. RTE.	SECTION	COUNTY	TOTAL SHEETS	SHEET NO.
0347	0347 22 BJ3	DUPAGE	98	34
		CONTRACT NO. 62T17		
TS-05	ILLINOIS	FED. AID PROJECT		

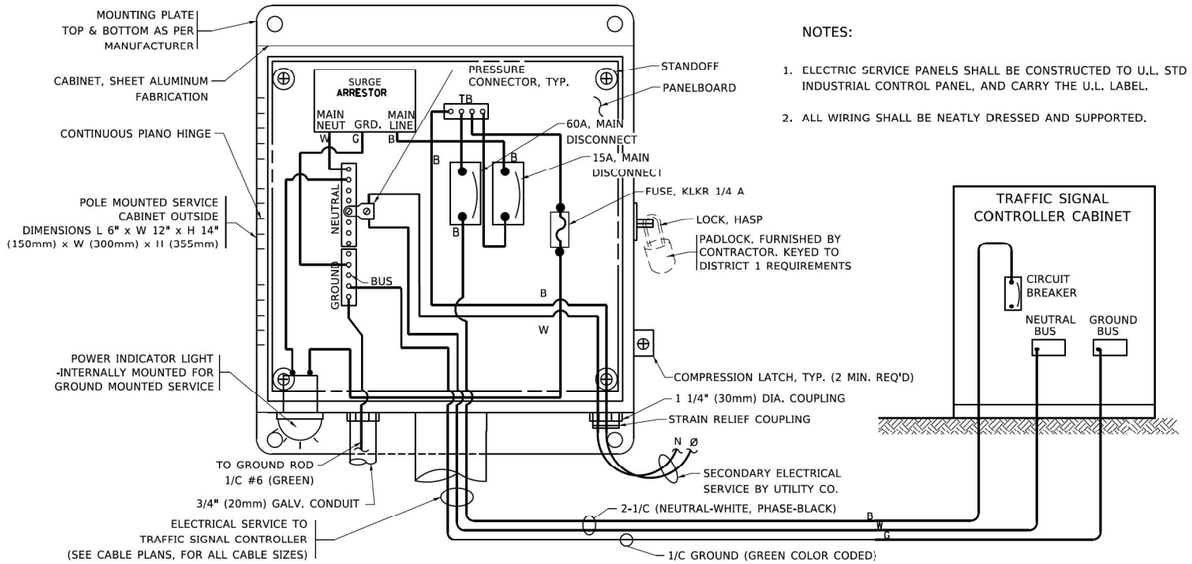

NOTES:

1. ELECTRIC SERVICE PANELS SHALL BE CONSTRUCTED TO U.L. STD 508, INDUSTRIAL CONTROL PANEL, AND CARRY THE U.L. LABEL.
2. ALL WIRING SHALL BE NEATLY DRESSED AND SUPPORTED.

ELECTRICAL SERVICE – PANEL DIAGRAM (TYPICAL FOR POLE AND GROUND MOUNTED SERVICE)

SERVICE INSTALLATION POLE MOUNT (SHOWN)

(NOT TO SCALE)

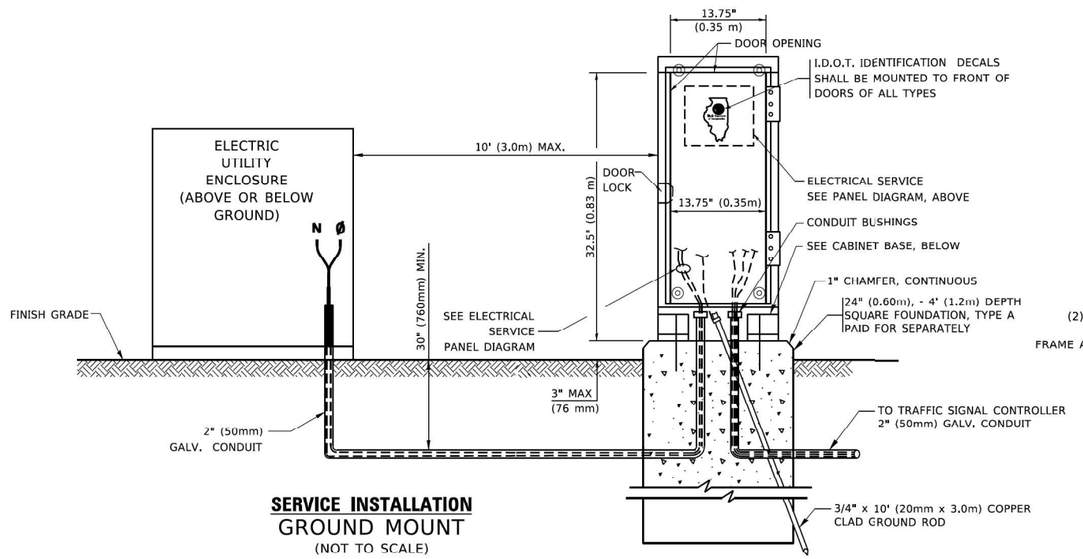

SERVICE INSTALLATION

GROUND MOUNT

(NOT TO SCALE)

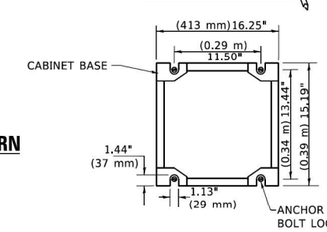

CABINET – BASE BOLT PATTERN

(NOT TO SCALE)

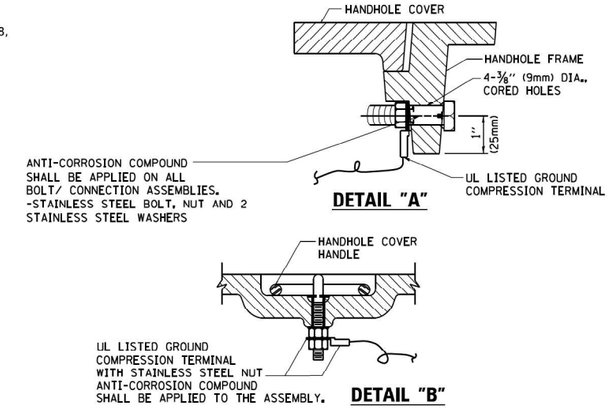

NOTES:

GROUNDING SYSTEM

1. THE GROUNDING SYSTEM SHALL CONSIST OF AN INSULATED CONDUCTOR TYPE XLP, NO. 6 A.W.G., STRANDED COPPER TO BE INSTALLED IN RACEWAYS. THE GROUNDING CABLE SHALL BE INSTALLED IN A CONTINUOUS MANNER AS SHOWN ON THE CABLE PLAN PROVIDED. ALL GROUNDING CONDUCTORS SHALL BE BONDED TO METAL ENCLOSURE (HANDHOLE, POST, MAST ARM, CONTROLLER, ETC,). GROUND ROD SHALL BE 3/4" DIA. x 10'-0" (20mm x 3.0m) LONG, COPPER CLAD. ONE GROUND ROD SHALL BE INSTALLED AT ALL POST FOUNDATIONS, POLE FOUNDATIONS, CONTROLLER CABINET FOUNDATION AND ELECTRICAL SERVICE INSTALLATION AS INDICATED ON THE CABLE PLAN. IF THERE ARE ANY SPECIAL CONDITIONS SUCH AS SUB-SURFACE CONDITIONS OR INSTALLATION PROBLEMS, THE RESIDENT ENGINEER SHALL BE NOTIFIED OR CONTACT THE BUREAU OF TRAFFIC, ILLINOIS DEPARTMENT OF TRANSPORTATION DISTRICT ONE AT (847) 705-4139.
2. THE NEUTRAL CONDUCTOR AND THE GROUND CONDUCTOR SHALL BE CONNECTED IN THE SERVICE INSTALLATION. AT NO OTHER POINT IN THE TRAFFIC SIGNAL SYSTEM SHALL THE NEUTRAL AND GROUND CONDUCTORS BE CONNECTED.
3. ALL EQUIPMENT GROUNDING CONDUCTORS SHALL TERMINATE AT THE GROUND BUS IN THE CONTROLLER CABINET.
4. THE CONTRACTOR SHALL PROVIDE A GROUND CABLE WITH CONNECTORS BETWEEN THE HANDHOLE COVER AND HANDHOLE FRAME.

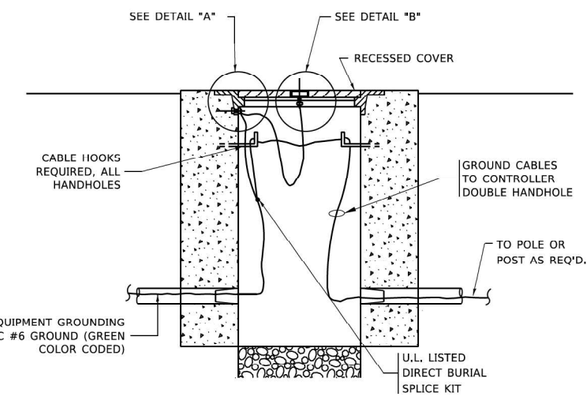

HANDHOLE COVER & FRAME – GROUNDING DETAIL

(NOT TO SCALE)

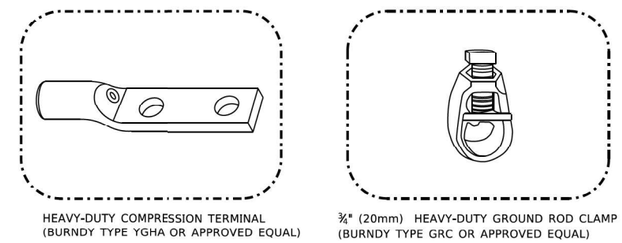

NOTES:

- ALL CLAMPS SHALL BE BRONZE OR COPPER, UL APPROVED.
- GROUND CABLE SHALL BE LOOPED OVER HOOKS IN THE HANDHOLES
  6.5' (2.0m) SLACK SHALL BE PROVIDED IN SINGLE HANDHOLES
  13' (4.0m) OF SLACK SHALL BE PROVIDED IN DOUBLE HANDHOLES.
  5' (1.4m) OF SLACK SHALL BE PROVIDED BETWEEN FRAME AND COVER.

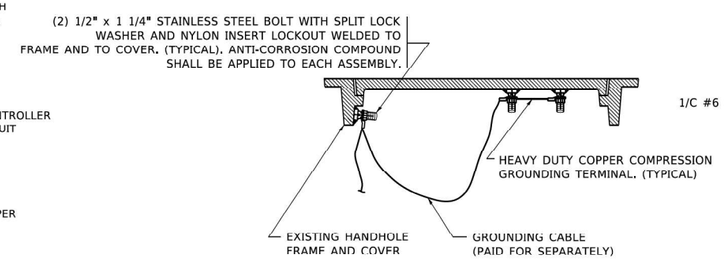

EXISTING HANDHOLE COVER & FRAME – GROUNDING DETAIL

(NOT TO SCALE)

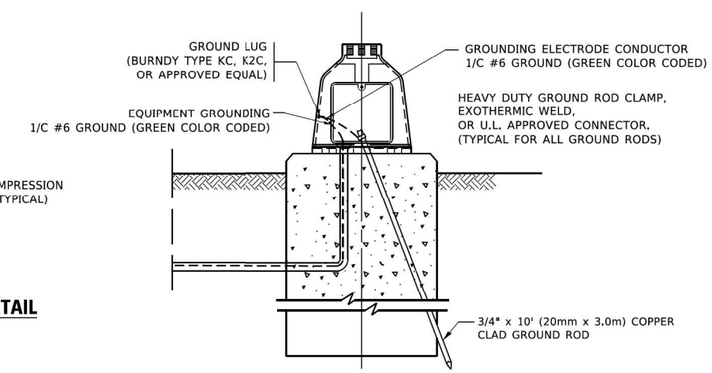

MAST ARM POLE /POST–GROUNDING DETAIL

(NOT TO SCALE)

TS SHT NO. 4

MODEL: TS-05d [Sheet]
FILE NAME: pw://mb-us-pw.bentley.com:mb-us-pw-03/Documents/Chicago_IL/01_Projects/D1_IDOT_Var_DServs_PTB208_005/W01 - 1982943.0 Deliverables/3.3 CADD Data/Sheets/D162117-eht-ts05d.dgn

Michael Baker INTERNATIONAL
200 West Adams Street, Suite 1800, Chicago, IL 60606
Phone: (312) 707-8770 • MBAKERINTL.COM

USER NAME = Connor.Liss	DESIGNED -	REVISED -	
	DRAWN -	REVISED -	
PLOT SCALE = 0.16666633 ' / in.	CHECKED -	REVISED -	
PLOT DATE = 8/9/2024	DATE -	REVISED -	

STATE OF ILLINOIS
DEPARTMENT OF TRANSPORTATION

DISTRICT ONE
STANDARD TRAFFIC SIGNAL DESIGN DETAILS

SCALE: NONE | SHEET 4 OF 7 SHEETS | STA. | TO STA.

F.A.P. RTE.	SECTION	COUNTY	TOTAL SHEETS	SHEET NO.
0347	0347 22 BJ3	DUPAGE	98	35
		CONTRACT NO. 62T17		
TS-05	ILLINOIS	FED. AID PROJECT		

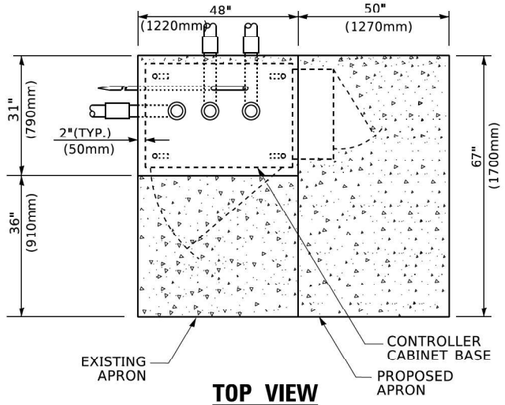

TOP VIEW

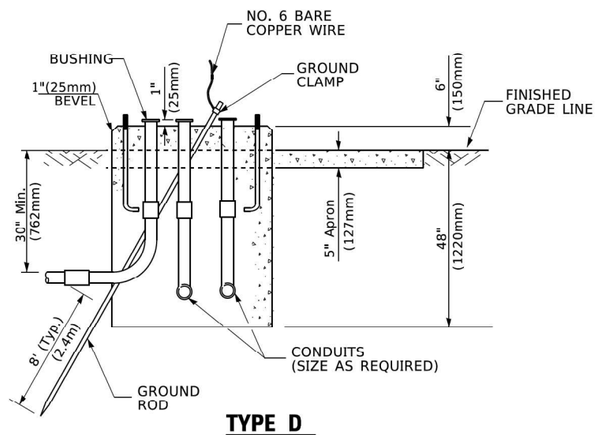

TYPE D
FOR GROUND MOUNTED CONTROLLER CABINET AND UPS BATTERY CABINET

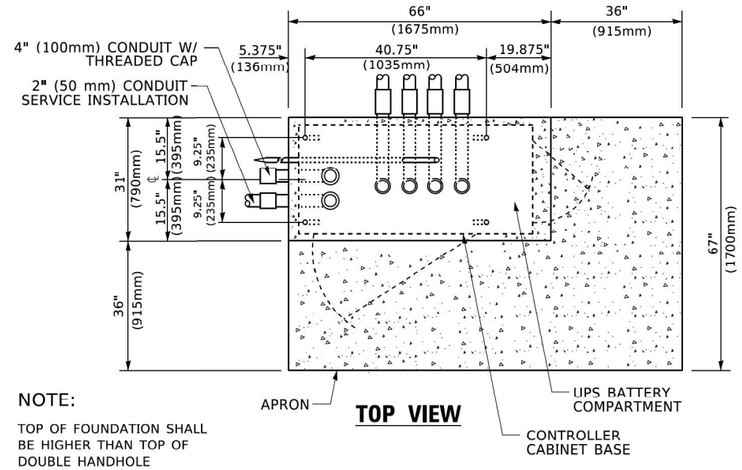

NOTE:

TOP OF FOUNDATION SHALL BE HIGHER THAN TOP OF DOUBLE HANDHOLE

TOP VIEW

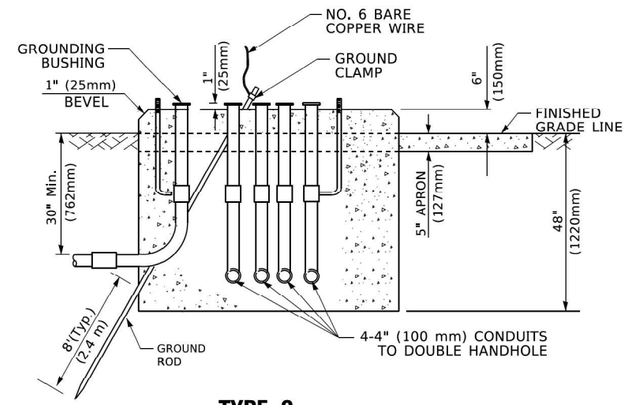

TYPE C
FOR GROUND MOUNTED SUPER P (TYPE IV) AND SUPER R (TYPE V) CONTROLLER CABINETS

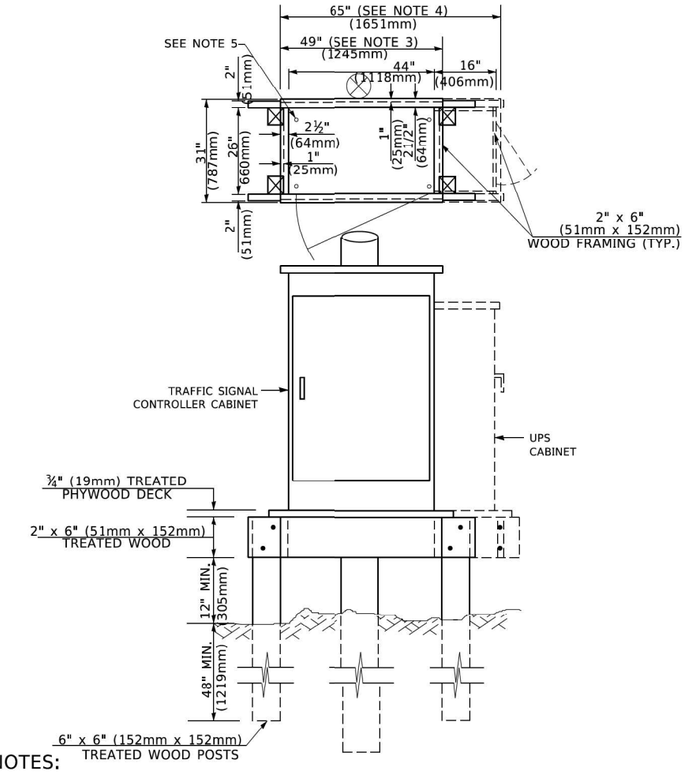

NOTES:

1. BASED ON CONTROLLER CABINET TYPE IV WITH BASE DIMENSIONS OF 26" x 44" (660mm x 1118mm). ADJUST PLATFORM SIZE TO FIT CABINET BASE DIMENSIONS BEING SUPPLIED
2. BASED ON UNINTERRUPTIBLE POWER SUPPLY CABINET WITH BASE DIMENSIONS OF 16" x 25" (406mm x 635mm). ADJUST PLATFORM SIZE TO FIT CABINET BASE DIMENSIONS BEING SUPPLIED.
3. PLATFORM SIZE FOR CONTROLLER CABINET TYPE IV.
4. PLATFORM SIZE FOR CONTROLLER CABINET TYPE IV AND UNINTERRUPTIBLE POWER SUPPLY CABINET.
5. DRILLED HOLES THROUGH THE PLATFORM BASE TO MATCH THE CONTROLLER CABINET BOLT TEMPLATE. FASTEN THE CONTROLLER CABINET TO THE PLATFORM WITH CARRIAGE BOLTS, WASHERS AND NUTS.
6. FASTEN ALL SUPPORT WOOD FRAMING TO THE WOOD POSTS WITH 2 LAG SCREWS FOR EACH CONNECTION..

TEMPORARY SIGNAL CONTROLLER WOOD SUPPORT PLATFORM

CABLE SLACK LENGTH	FEET	METER
HANDHOLE	6.5	2.0
DOUBLE HANDHOLE	13.0	4.0
SIGNAL POST	2.0	0.6
MAST ARM	2.0	0.6
CONTROLLER CABINET	1.5	0.5
FIBER OPTIC AT CABINET	13.0	4.0
ELECTRIC SERVICE AT (CABINET OR SERVICE LOCATION)	1.5	0.5
GROUND CABLE (SIGNAL POST, MAST ARM, CABINET)	1.5	0.5
GROUND CABLE (BETWEEN FRAME AND COVER)	5.0	1.6

CABLE SLACK

VERTICAL CABLE LENGTH	FEET	METER
MAST ARM POLE (MAST ARM MOUNTED SIGNAL HEAD) (L = MAST ARM LENGTH - DISTANCE TO SIGNAL HEAD FROM END OF ARM)	20.0+L	6.0+L
BRACKET MOUNTED (MAST ARM POLE OR SIGNAL POLE)	13.0	4.0
PEDESTRIAN PUSH BUTTON	6.0	2.0
SERVICE INSTALLATION POLE MOUNT TO SERVICE DROP	13.5	4.1
SERVICE INSTALLATION POLE MOUNT TO GROUND	13.5	4.1
SERVICE INSTALLATION GROUND MOUNT	6.0	2.0
FOUNDATION (SIGNAL POST, MAST ARM POLE, CONTROLLER CABINET, SERVICE-GROUND MOUNT)	3.0	1.0

VERTICAL CABLE LENGTH

FOUNDATION	DEPTH
TYPE A - Signal Post	4'-0" (1.2m)
TYPE C - CONTROLLER W/ UPS	4'-0" (1.2m)
TYPE D - CONTROLLER	4'-0" (1.2m)
SERVICE INSTALLATION, GROUND MOUNT, TYPE A - SQUARE	4'-0" (1.2m)

DEPTH OF FOUNDATION

Mast Arm Length	① Foundation Depth	Foundation Diameter	Spiral Diameter	Quantity of Rebars	Size of Rebars
Less than 30' (9.1 m)	10'-0" (3.0 m)	30" (750mm)	24" (600mm)	8	6(19)
Greater than or equal to 30' (9.1 m) and less than 40' (12.2 m)	13'-6" (4.1 m)	30" (750mm)	24" (600mm)	8	6(19)
	11'-0" (3.4 m)	36" (900mm)	30" (750mm)	12	7(22)
Greater than or equal to 40' (12.2 m) and less than 50' (15.2 m)	13'-0" (4.0 m)	36" (900mm)	30" (750mm)	12	7(22)
Greater than or equal to 50' (15.2 m) and up to 55' (16.8 m)	15'-0" (4.6 m)	36" (900mm)	30" (750mm)	12	7(22)
Greater than or equal to 56' (16.8 m) and less than 65' (19.8 m)	21'-0" (6.4 m)	42" (1060mm)	36" (900mm)	16	8(25)
Greater than or equal to 65' (19.8 m) and up to 75' (22.9 m)	25'-0" (7.6 m)	42" (1060mm)	36" (900mm)	16	8(25)

NOTES:

1. These foundation depths are for sites which have cohesive soils (clayey silt, sandy clay, etc.) along the length of the shaft, with an average Unconfined Compressive Strength (Qu) > 1.0 tsf (100 kpa). This strength shall be verified by boring data prior to construction or with testing by the Engineer during foundation drilling. The Bureau of Bridges & structures should be contacted for a revised design if other conditions are encountered.
2. Combination mast arm assemblies under 55 feet (16.8 m) shall use 36" (900 mm) diameter foundations.
3. Combination mast arm assemblies under 56 feet (16.8 m) through 75 feet (22.9 m) shall use 42" (1060 mm) diameter foundations
4. For mast arm assemblies with dual arms refer to state standard 878001..

DEPTH OF MAST ARM FOUNDATIONS, TYPE E

TS SHT NO. 5

MODEL: TS-05e [Sheet]
FILE NAME: pw://mb-us-pw.bentley.com:mb-us-pw-03/Documents/Chicago_IL/01_Projects/D1_IDOT_Var_DEservs_PTB208_005/W01 - 19829413.0 Deliverables/3.3 CADD Data/Sheets/D162T17-eht-ts05e.dgn

Michael Baker
INTERNATIONAL
200 West Adams Street, Suite 1800, Chicago, IL 60606
Phone: (312) 707-8770 · MBAKERINTL.COM

USER NAME = Connor.Liss	DESIGNED -	REVISED -	
	DRAWN -	REVISED -	
PLOT SCALE = 0.16666633 ' / in.	CHECKED -	REVISED -	
PLOT DATE = 8/9/2024	DATE -	REVISED -	

STATE OF ILLINOIS
DEPARTMENT OF TRANSPORTATION

DISTRICT ONE
STANDARD TRAFFIC DESIGN DETAILS

SCALE: NONE | SHEET 5 OF 7 SHEETS | STA. | TO STA.

F.A.P. RTE.	SECTION	COUNTY	TOTAL SHEETS	SHEET NO.
0347	0347 22 BJ3	DUPAGE	98	36
		CONTRACT NO. 62T17		
TS-05	ILLINOIS	FED. AID PROJECT		

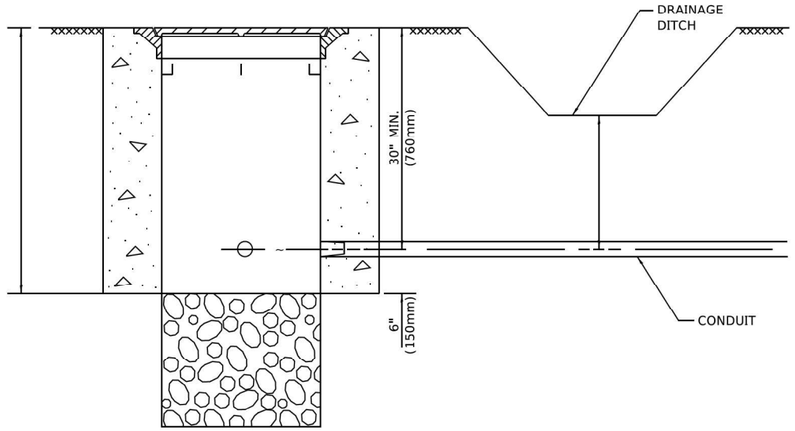

NOTES:

1. CONDUIT DEPTH SHALL BE A MINIMUM OF 30" (760mm) BELOW THE BOTTOM OF THE DRAINAGE DITCH OR ANY SLOPING GROUND
2. THE MINIMUM CONDUIT DEPTH APPLIES TO ALL CONDUIT PLACED UNDER ROADWAY PAVEMENT, MULTI-USE PATHS, SIDEWALKS AND SOIL SURFACES.
3. THE MINIMUM CONDUIT DEPTH APPLIES TO ALL HANDHOLES, HEAVY DUTY HANDHOLES AND DOUBLE HANDHOLES.

HANDHOLE WITH MINIMUM CONDUIT DEPTH

(NOT TO SCALE)

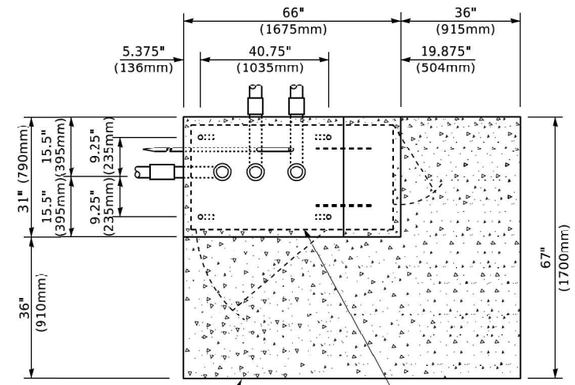

TOP VIEW

(NOT TO SCALE)

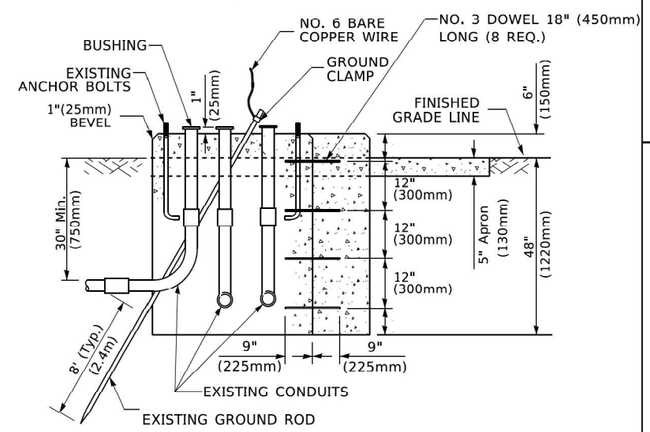

MODIFY EXISTING TYPE "D" FOUNDATION TO TYPE "C" FOUNDATION

(NOT TO SCALE)

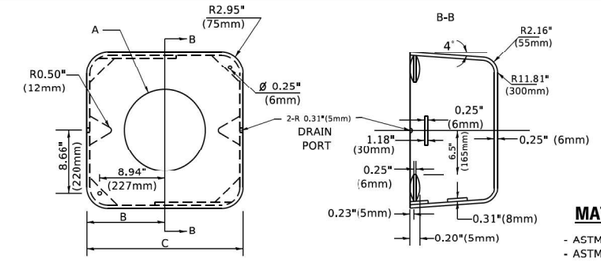

MATERIAL

- ASTM A36 STEEL
- ASTM A-123 HOT DIPPED GALVANIZED

A	B	C	HEIGHT	WEIGHT
VARIES	9.5"(241mm)	19"(483mm)	7" (178mm) - 12" (300mm)	53 lbs (24kg)
VARIES	10.75"(273mm)	21.5"(546mm)	7" (178mm) - 12" (300mm)	68 lbs (31 kg)
VARIES	13.0"(330mm)	26"(660mm)	7" (178mm) - 12" (300mm)	81 lbs (37 kg)
VARIES	18.5"(470mm)	37"(940mm)	7" (178mm) - 12" (300mm)	126 lbs (57 kg)

SHROUD

NOTES:

1. DIMENSION "A" IS EQUAL TO THE DIAMETER OF THE MAST ARM POLE AT THE TOP OF THE SHROUD. THE SHROUD SHALL BE TIGHT TO THE MAST ARM POLE.
2. THE SUPPLIER SHALL VERIFIED THE ABOVE DIMENSIONS BASED ON MAST ARM REQUIREMENTS.
3. THE HEIGHT OF THE SHROUD SHALL COVER THE ANCHOR BOLTS, NUTS AND MAST ARM POLE BASE.

NOTE:

SUPPORT EXISTING CABINET AND CONTROL EQUIPMENT ABOVE FOUNDATION TO KEEP TRAFFIC SIGNAL FUNCTIONING WHILE FOUNDATION MODIFICATION WORK IS PROCEEDING.

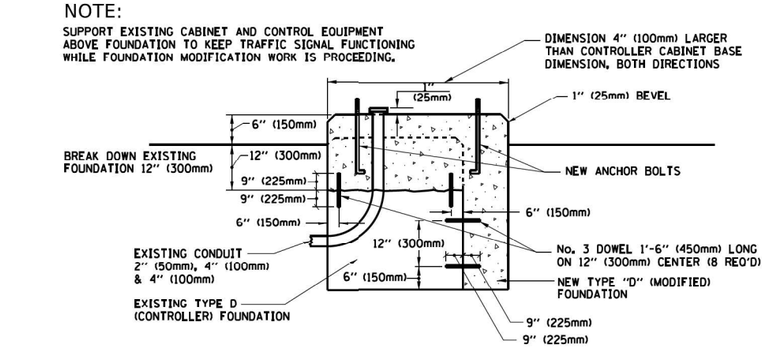

MODIFY EXISTING TYPE "D" FOUNDATION

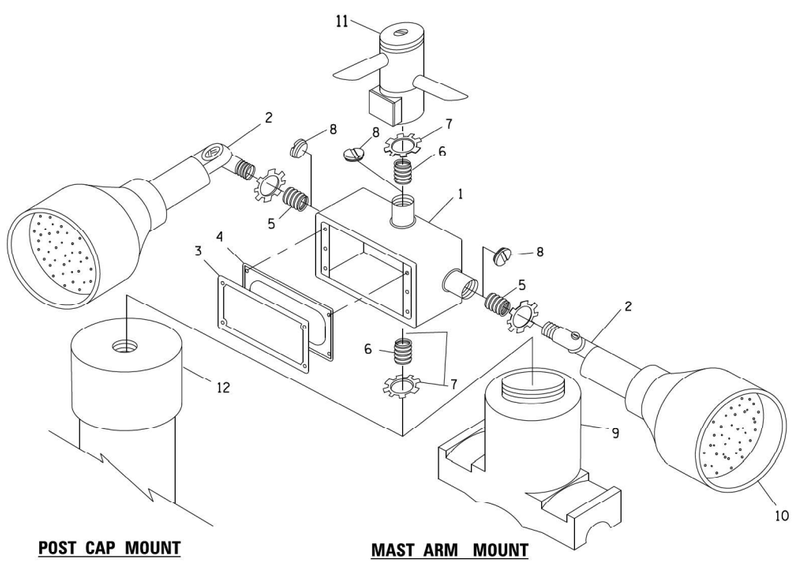

POST CAP MOUNT

MAST ARM MOUNT

EMERGENCY VEHICLE DETECTOR WITH CONFIRMATION BEACON MOUNTING DETAIL

ITEM NO.	IDENTIFICATION
1	OUTLET BOX- GALV. 21 CU.IN. (0.000344 CU-M)
2	LAMP HOLDER AND COVER
3	OUTLET BOX COVER
4	RUBBER COVER GASKET
5	REDUCING BUSHING
6	¾"(19 mm) CLOSE NIPPLE
7	¾"(19 mm) LOCKNUT
8	¾"(19 mm) HOLE PLUG
9	SADDLE BRACKET - GALV.
10	6 WATT PAR 38 LED FLOOD LAMP
11	DETECTOR UNIT
12	POST CAP [18 FT. (5.4 m) POST MIN.]

NOTES:

1. ALL ELECTRICAL ITEMS, EXCEPT ITEMS #2 AND #11 SHALL BE ALUMINUM OR GALVANIZED
2. ITEM #1- OZ/GEDNEY FSX-1-50 OR EQUIVALENT
   ITEM #2- MULBERRY CON-O-SHADE LAMP SHIELD OR EQUIVALENT
   ITEM #9- "BAND-IT" SADDLE BRACKET OR EQUIVALENT
3. WHEN POST MOUNTING IS SPECIFIED, ITEM #9 SHALL NOT BE REQUIRED. THE DETECTION UNIT SHALL BE MOUNTED DIRECTLY ON TOP OF THE CAP BY DRILLING AND TAPPING A 3/4 "(19 mm) HOLE WITH PIPE THREADS. THE POST CAP SHALL EITHER BE SCREWED TO THE TOP OF THE POST OR A MINIMUM OF 3 TIGHTENING SCREWS SHALL BE REQUIRED ON EACH CAP.

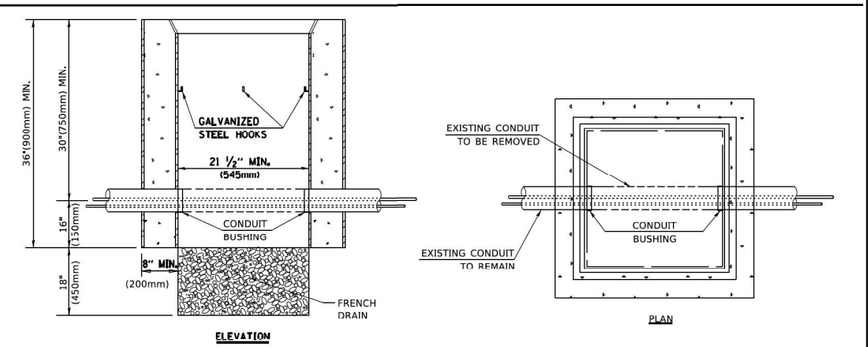

NOTES:

1. HANDHOLE CONSTRUCTED PER STATE STANDARD 814001.
2. REMOVAL OF THE EXISTING CONDUIT FROM THE HANDHOLE AND THE INSTALLATION OF THE CONDUIT BUSHINGS SHALL BE INCLUDED WITH THE COST OF THE HANDHOLE.

HANDHOLE TO INTERCEPT EXISTING CONDUIT

TS SHT NO. 6

MODEL: TS-05f [Sheet]
FILE NAME: pw://mb-us-pw.bentley.com:mb-us-pw-03/Documents/Chicago_IL/01_Projects/D1_IDOT_Var_DEserv's_PTB208_005/V01 - 198294/3.0 Deliverables/3.3 CADD Data/Sheets/D162T17-eht-ts05f.dgn

Michael Baker INTERNATIONAL
200 West Adams Street, Suite 1800, Chicago, IL 60606
Phone: (312) 707-8770 • MBAKERINTL.COM

USER NAME = Connor.Liss	DESIGNED -	REVISED -	
	DRAWN -	REVISED -	
PLOT SCALE = 0.16666633 ' / in.	CHECKED -	REVISED -	
PLOT DATE = 8/9/2024	DATE -	REVISED -	

STATE OF ILLINOIS
DEPARTMENT OF TRANSPORTATION

DISTRICT ONE
STANDARD TRAFFIC DESIGN DETAILS

SCALE: NONE | SHEET 6 OF 7 SHEETS | STA. | TO STA.

F.A.P. RTE.	SECTION	COUNTY	TOTAL SHEETS	SHEET NO.
0347	0347 22 BJ3	DUPAGE	98	37
		CONTRACT NO. 62T17		
TS-05	ILLINOIS	FED. AID PROJECT		

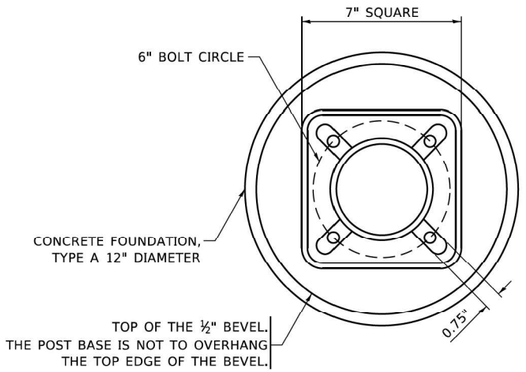

BOLT PATTERN

NOTE:

1. IF THE PEDESTRIAN SIGNAL POST FOUNDATION IS INSTALLED WITHIN OR BEHIND A BARRIER CURB, THE TOP OF THE FOUNDATION SHALL BE INSTALLED FLUSH WITH THE TOP OF THE BARRIER CURB.

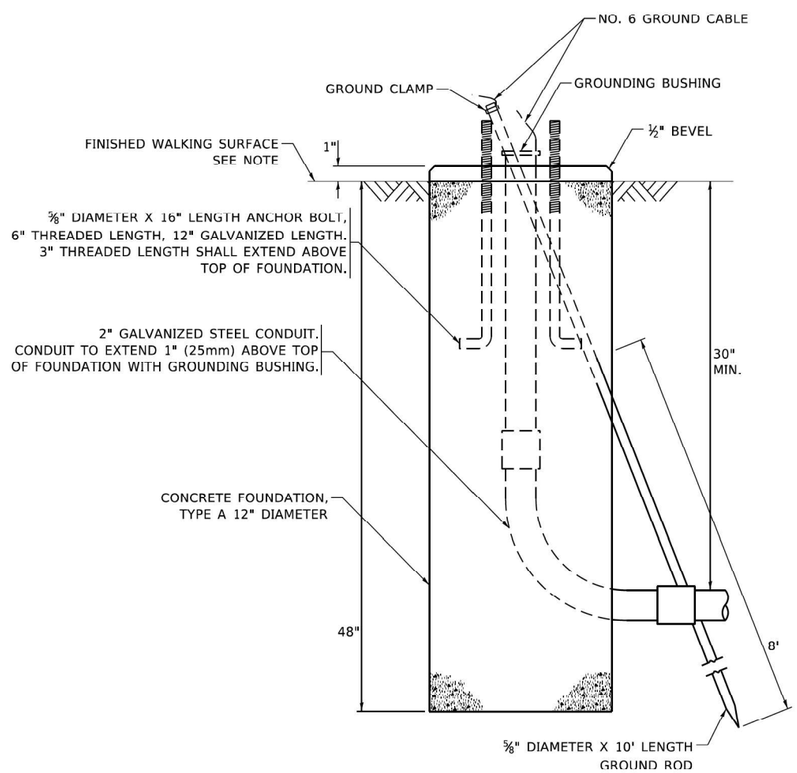

CONCRETE FOUNDATION, TYPE A 12–INCH DIAMETER

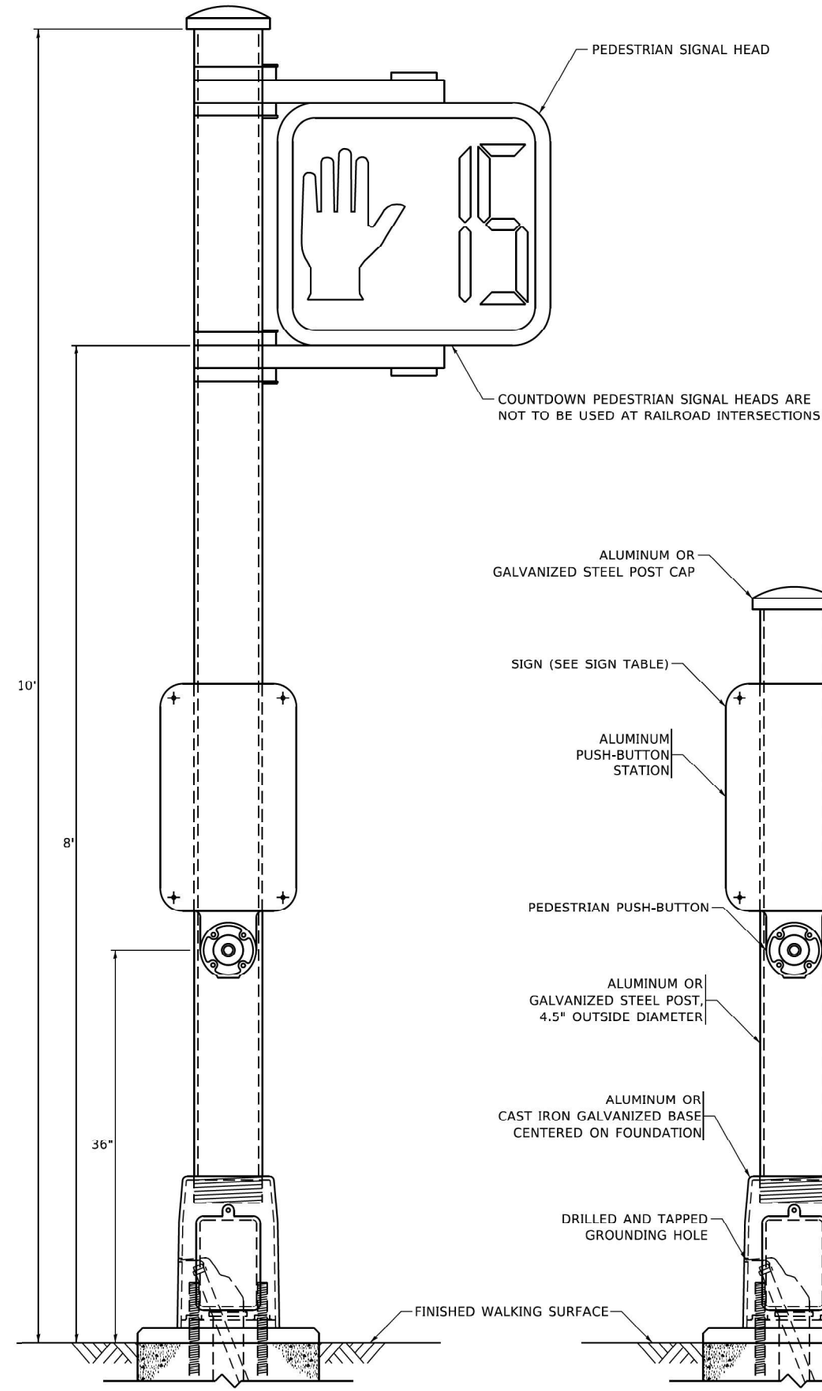

PEDESTRIAN SIGNAL POST, 10 FT.

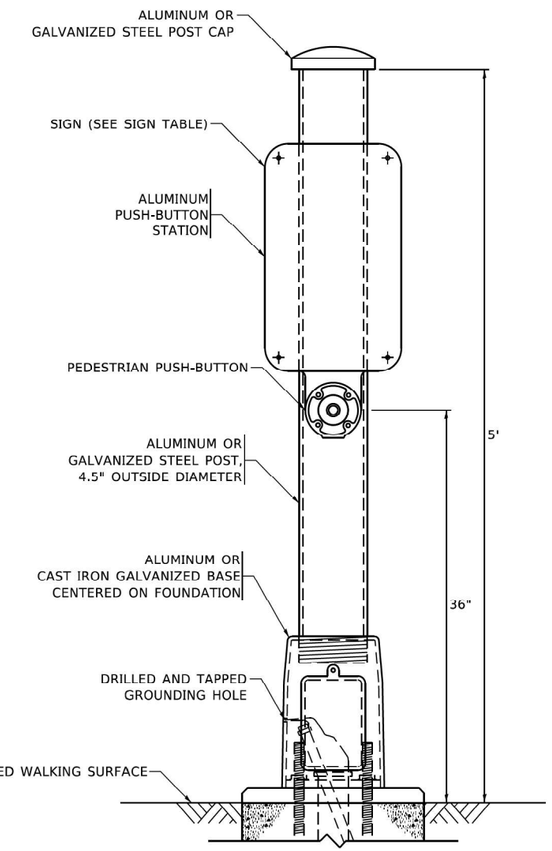

PEDESTRIAN SIGNAL POST, 5 FT.

R10–3b **R10–3d** **R10–3e**

SIGN TABLE

SIGN	DIMENSIONS
R10-3b (RAILROAD ONLY)	9" X 12"
R10-3d (RAILROAD ONLY)	9" X 12"
R10-3e	9" X 12"

NOTES:

1. THE SIGN PANELS SHALL BE TYPE AP SHEETING.
2. THE ARROW ON SIGNS FOR PUSH-BUTTONS SERVING TWO DIRECTIONS ON THE SAME PHASE SHALL BE BI-DIRECTIONAL.
3. THE SIGN FOR DUAL-CALL PUSH-BUTTONS SHALL HAVE NO ARROW.

TS SHT NO. 7

MODEL: TS-05g [Sheet]
FILE NAME: pw://mb-us-pw.bentley.com:mb-us-pw-03/Documents/Chicago_IL/01_Projects/D1_IDOT_Var_DEserv's_PTB208_005/W01 - 198294.3.0 Deliverables/3.3 CADD Data/Sheets/D162T17-eht-ts05g.dgn

Michael Baker INTERNATIONAL
200 West Adams Street, Suite 1800, Chicago, IL 60606
Phone: (312) 707-8770 • MBAKERINTL.COM

USER NAME = Connor.Liss	DESIGNED - IP	REVISED - 10/15/2020	
	DRAWN - IP	REVISED -	
PLOT SCALE = 0.16666633 ' / in.	CHECKED - LP	REVISED -	
PLOT DATE = 8/9/2024	DATE - 10/15/2018	REVISED -	

STATE OF ILLINOIS
DEPARTMENT OF TRANSPORTATION

DISTRICT ONE
STANDARD TRAFFIC DESIGN DETAILS

SCALE: NONE | SHEET 7 OF 7 SHEETS | STA. TO STA.

F.A.P. RTE.	SECTION	COUNTY	TOTAL SHEETS	SHEET NO.
0347	0347 22 BJ3	DUPAGE	98	38
		CONTRACT NO. 62T17		
TS-05	ILLINOIS	FED. AID PROJECT		

REMOVAL AND RELOCATION NOTES:

THE FOLLOWING ITEMS SHALL BE REMOVED BY THE CONTRACTOR AND SHALL BE DISPOSED OF BY THEM OUTSIDE THE RIGHT-OF-WAY AT THEIR EXPENSE. THE SALVAGE VALUE OF THE REMOVED EQUIPMENT SHALL BE REFLECTED IN THE CONTRACTOR BID PRICE.

4 EACH PEDESTRIAN PUSH-BUTTON

CONTRACTOR SHALL PERFORM SIGNAL WORK IN SUCH A WAY AS TO MINIMIZE THE TIME THE EXISTING PEDESTRIAN EQUIPMENT IS INOPERATIONAL

CONTRACTOR SHALL CONFIRM THE FINAL LOCATION OF THE PEDESTRIAN EQUIPMENT BEFORE INSTALLATION WITH THE TRAFFIC SIGNAL AREA ENGINEER.

DIMENSIONS SHOWN ARE FROM CENTER OF POST TO THE BACK OF CURB AND ARE APPROPRIATE.

STATIONING SHOWN ON TRAFFIC SIGNAL PLAN ARE FROM RECORD DRAWINGS AND WILL NOT MATCH OTHER PLANS.

CONTRACTOR SHALL CONFIRM THE FINAL LOCATION OF THE APS EQUIPMENT WITH THE TRAFFIC SIGNAL AREA ENGINEER BEFORE INSTALLATION.

APS BUTTONS SHALL BE PLACED PARALLEL TO THE CORRESPONDING CROSSWALK.

WHERE TRAFFIC SIGNAL EQUIPMENT IS REMOVED, THE EXISTING ELECTRICAL CABLE SHALL BE REMOVED FROM CONDUIT.

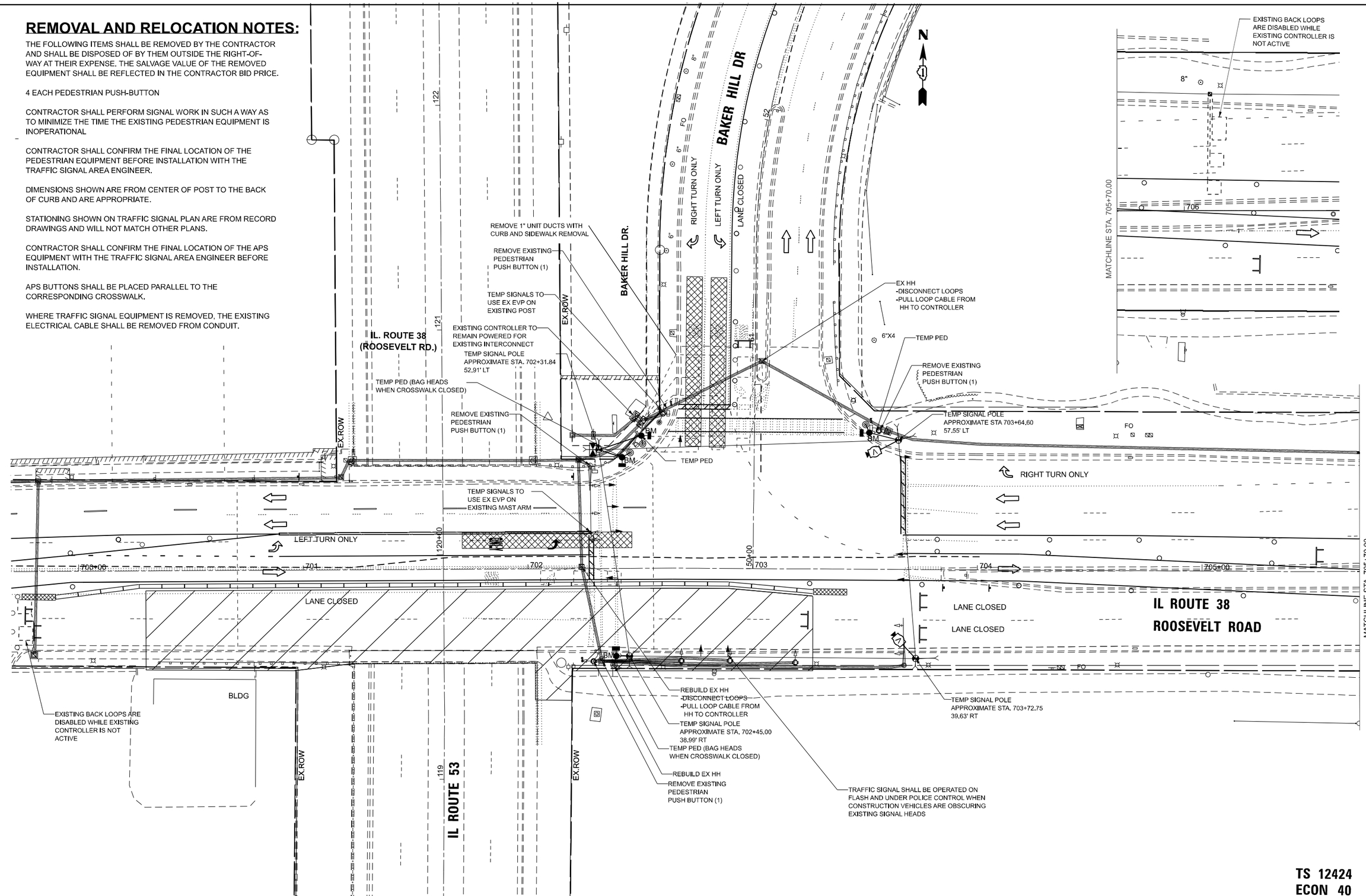

TS 12424
ECON 40

TS SHT NO. 8

MODEL: PrCL IL38 - TS Stage1 [Sheet]
FILE NAME: pw://mb-us-pw.bentley.com:mb-us-pw-03/Documents/Chicago_IL 01_Projects/D1_IDOT_Var_DEservs_PTB208_005/W01 - 198294.0 Deliverables/3.3 CADD Data/Sheets/D162117-eht-ts-stage1-01.dgn

Michael Baker INTERNATIONAL, 200 West Adams Street, Suite 1800, Chicago, IL 60606, Phone: (312) 707-8770 · MBAKERINTL.COM	USER NAME = Connor.Liss	DESIGNED - ZJT	REVISED -
		DRAWN - JR	REVISED -
	PLOT SCALE = $SCALE$	CHECKED - SJS	REVISED -
	PLOT DATE = 8/9/2024	DATE - 08/09/2024	REVISED -

STATE OF ILLINOIS
DEPARTMENT OF TRANSPORTATION

TEMP. TRAFFIC SIGNAL INSTALLATION (STAGE 1) & REMOVAL PLAN
IL 38 (ROOSEVELT ROAD) OVER IL 53

SCALE: 1"=20' | SHEET 1 OF 4 SHEETS | STA. 700+00.00 TO STA. 706+00.00

F.A.P. RTE.	SECTION	COUNTY	TOTAL SHEETS	SHEET NO.
0347	0347 22 BJ3	DUPAGE	98	39
		CONTRACT NO. 62T17		
		ILLINOIS	FED. AID PROJECT	

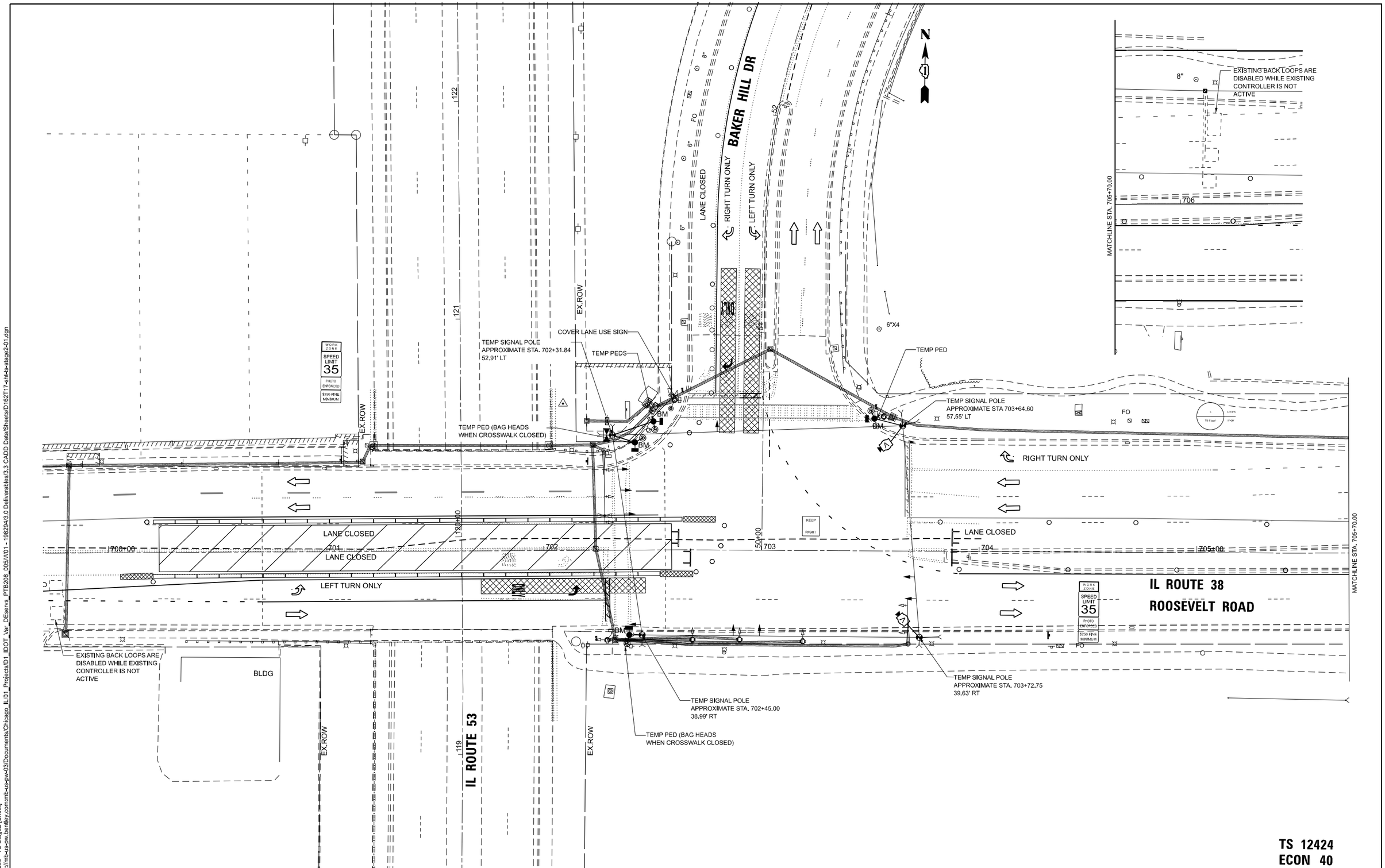

TS SHT NO. 9

TS 12424
ECON 40

MODEL: PrCL IL38 - TS Stage2 [Sheet]
FILE NAME: pw://mb-us-pw.bentley.com:mb-us-pw-03/Documents/Chicago_IL/01_Projects/D1_IDOT_Var_DEservs_PTB208_005/W01 - 1982943.0 Deliverables/3.3 CADD Data/Sheets/D162T17-eht-ts-stage2-01.dgn

Michael Baker
INTERNATIONAL
200 West Adams Street, Suite 1800, Chicago, IL 60606
Phone: (312) 707-6770 - MBAKERINTL.COM

USER NAME = Connor.Liss	DESIGNED - ZJT	REVISED -	
	DRAWN - JR	REVISED -	
PLOT SCALE = 0.16666633 ' / in.	CHECKED - SJS	REVISED -	
PLOT DATE = 8/9/2024	DATE - 08/09/2024	REVISED -	

STATE OF ILLINOIS
DEPARTMENT OF TRANSPORTATION

TEMPORARY TRAFFIC SIGNAL PLAN (STAGE 2)
IL 38 (ROOSEVELT ROAD) OVER IL 53

SCALE: 1"=20' | SHEET 2 OF 4 SHEETS | STA. 700+00.00 TO STA. 706+00.00

F.A.P. RTE.	SECTION	COUNTY	TOTAL SHEETS	SHEET NO.
0347	0347 22 BJ3	DUPAGE	98	40
		CONTRACT NO. 62T17		
		ILLINOIS	FED. AID PROJECT	

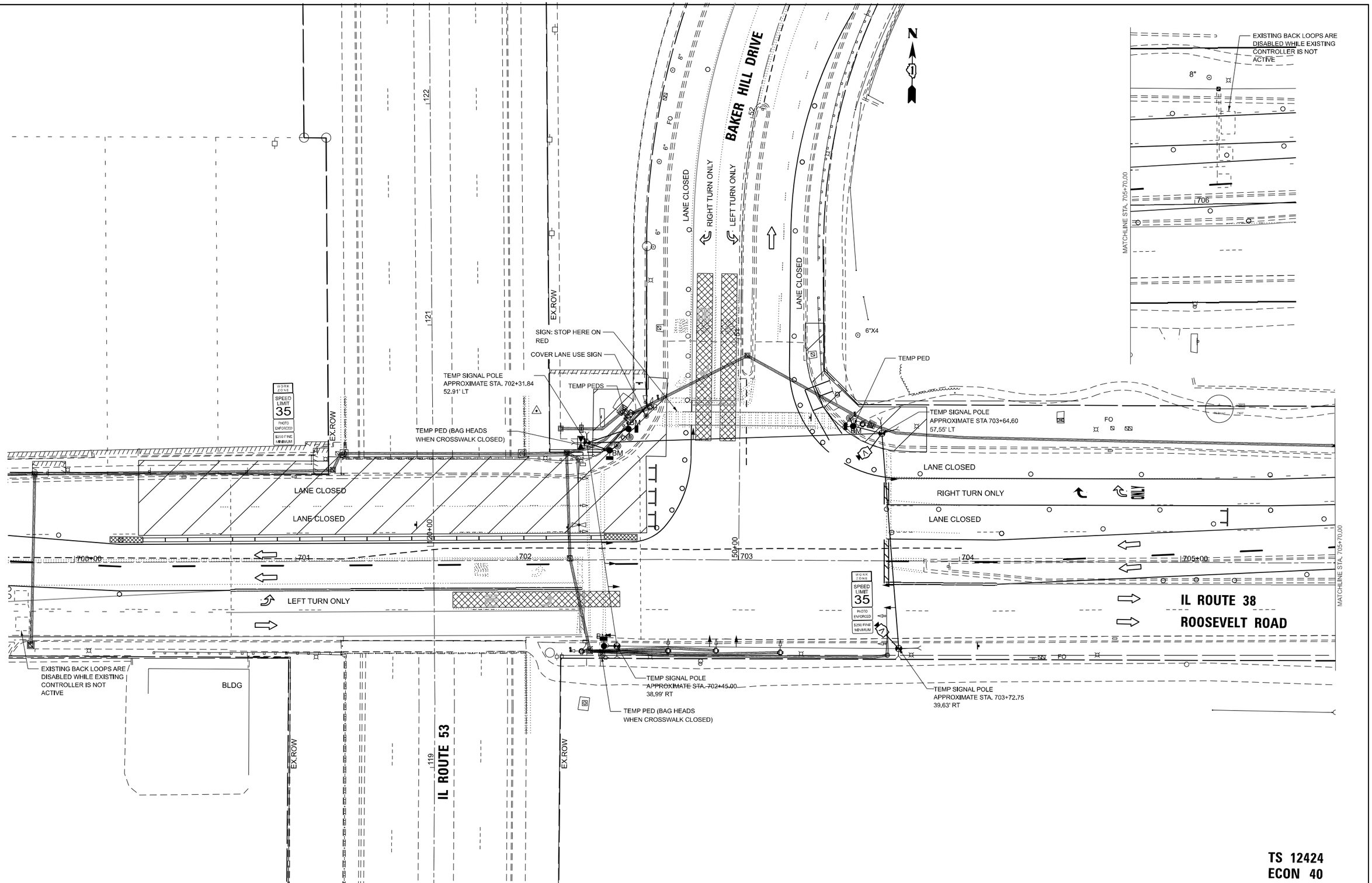

TS 12424
ECON 40

TS SHT NO. 10

MODEL: PrCL IL38 - TS Stage3 [Sheet]
FILE NAME: pw://mb-us-pw.bentley.com:mb-us-pw-03/Documents/Chicago_IL/01_Projects/D1_IDOT_Var_DEservs_PTB208_005/W01 - 1982943.0 Deliverables/3.3 CADD Data/Sheets/D162T17-eIH-ts-stage3-01.dgn

Michael Baker
INTERNATIONAL
200 West Adams Street, Suite 1800, Chicago, IL 60606
Phone: (312) 707-6770 · MBAKERINTL.COM

USER NAME = Connor.Liss	DESIGNED - ZJT	REVISED -	
	DRAWN - JR	REVISED -	
PLOT SCALE = 0.16666633 ' / in.	CHECKED - SJS	REVISED -	
PLOT DATE = 8/9/2024	DATE - 08/09/2024	REVISED -	

STATE OF ILLINOIS
DEPARTMENT OF TRANSPORTATION

TEMPORARY TRAFFIC SIGNAL PLAN (STAGE 3)
IL 38 (ROOSEVELT ROAD) OVER IL 53

SCALE: 1"=20' | SHEET 3 OF 4 SHEETS | STA. 700+00.00 TO STA. 706+00.00

F.A.P. RTE.	SECTION	COUNTY	TOTAL SHEETS	SHEET NO.
0347	0347 22 BJ3	DUPAGE	98	41
		CONTRACT NO. 62T17		
	ILLINOIS	FED. AID PROJECT		

TEMPORARY CONTROLLER SEQUENCE

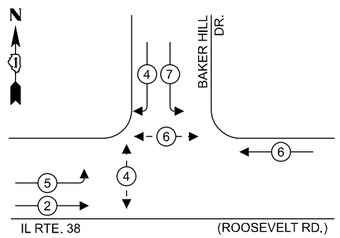

LEGEND:

- PROTECTED PHASE
- PROTECTED/PERMITTED PHASE
- PEDESTRIAN PHASE
- OL — OVERLAP

TEMPORARY EMERGENCY VEHICLE PREEMPTION SEQUENCE

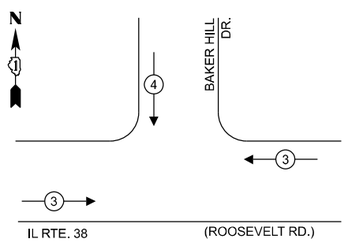

PROPOSED EMERGENCY VEHICLE PREEMPTORS		
EMERGENCY VEHICLE PREEMPTOR	3	4
MOVEMENT	← →	↓

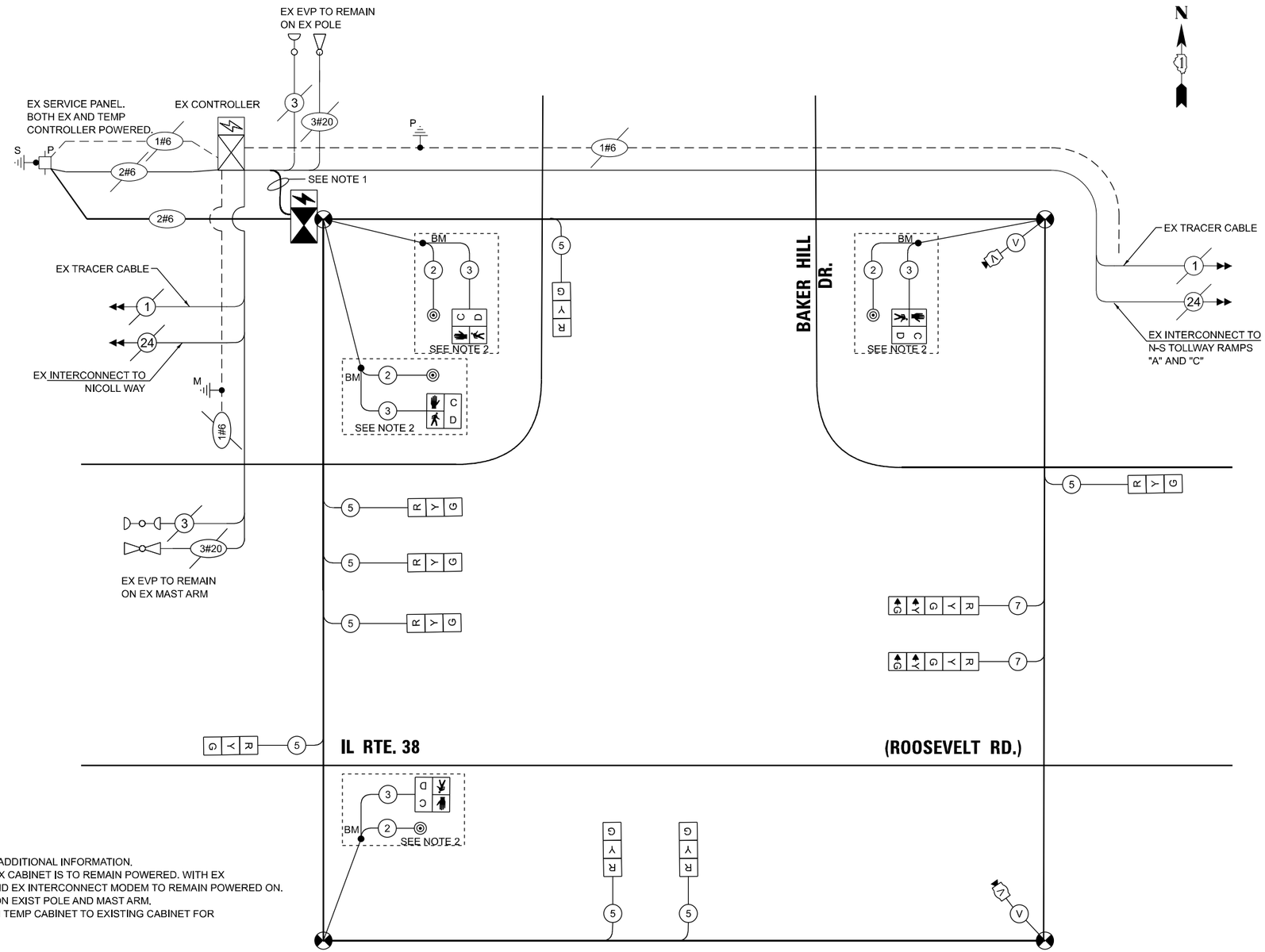

TEMPORARY TRAFFIC SIGNAL ELECTRICAL SERVICE REQUIREMENTS

TYPE	NO. OF LAMPS	LED WATTAGE	% OPERATION	TOTAL WATTAGE
SIGNAL (RED)	10	11	50	55
(YELLOW)	10	20	5	10
(GREEN)	10	12	45	54
PERMISSIVE ARROW	4	10	10	4
PED. SIGNAL	4	20	100	80
CONTROLLER	1	100	100	100
UPS	1	25	100	25
VIDEO SYSTEM	1	150	100	150
BLANK-OUT SIGN	-	25	5	-
FLASHER	-	-	50	-
STREET NAME SIGN	-	120	50	-
LUMINAIRE	-	-	-	-
			TOTAL =	478

ENERGY COSTS TO:
THE VILLAGE OF GLEN ELLYN
535 DUANE STREET
GLEN ELLYN, IL 60137

ENERGY SUPPLY: CONTACT: NEW BUSINESS DEPARTMENT
PHONE: 866-639-3532
COMPANY: COMED
ACCOUNT NUMBER: -

NOTE 1:
-REFER TO EXISTING CABLE PLAN FOR ADDITIONAL INFORMATION.
-FOR TEMP SIGNAL CONDITIONS, THE EX CABINET IS TO REMAIN POWERED. WITH EX CONTROLLER TO BE POWERED OFF, AND EX INTERCONNECT MODEM TO REMAIN POWERED ON.
-EX EVP DETECTOR/LIGHT TO REMAIN ON EXIST POLE AND MAST ARM.
-ADD TEMP WIRING CONNECTION FROM TEMP CABINET TO EXISTING CABINET FOR EVP AND INTERCONNECT.

NOTE 2:
-TEMPORARY PED HEADS
-INSTALL ON BARREL MOUNTED (BM) FOUNDATIONS, WITHIN 10' OF CROSSWALK
-BAG WEST LEG PED HEADS AND BUTTONS DURING STAGES 1,2,3 WHEN ACCPROACH SLAB IS TO BE OVERLAID

TEMPORARY CABLE PLAN
(NOT TO SCALE)

TS #12424
ECON 40

TS SHT NO. 11

MODEL: Traffic Signal Wiring [Sheet]
FILE NAME: pw://mb-us-pw.bentley.com:mb-us-pw-03/Documents/Chicago_IL/01_Projects/D1_IDOT_Var_DEserv's_PTB208_005/W01 - 198294.3.0 Deliverables/3.3 CADD Data/Sheets/D162117-eht-ts-wiring.dgn

Michael Baker INTERNATIONAL
200 West Adams Street, Suite 1800, Chicago, IL 60606
Phone: (312) 707-8770 • MBAKERINTL.COM

USER NAME = Connor.Liss	DESIGNED - ZJT	REVISED -	
	DRAWN - JR	REVISED -	
PLOT SCALE = 0.16666633 ' / in.	CHECKED - SJS	REVISED -	
PLOT DATE = 8/9/2024	DATE - 08/09/2024	REVISED -	

STATE OF ILLINOIS
DEPARTMENT OF TRANSPORTATION

TEMPORARY CABLE PLAN, TEMPORARY PHASE DESIGNATION DIAGRAM, AND TEMPORARY EMERGENCY VEHICLE PREEMPTION SEQUENCE ROOSEVELT RD AND BAKER HILL DR

SCALE: 1"=20' | SHEET 4 OF 4 SHEETS | STA. | TO STA.

F.A.P. RTE.	SECTION	COUNTY	TOTAL SHEETS	SHEET NO.
0347	0347 22 BJ3	DUPAGE	98	42
		CONTRACT NO. 62T17		
		ILLINOIS	FED. AID PROJECT	

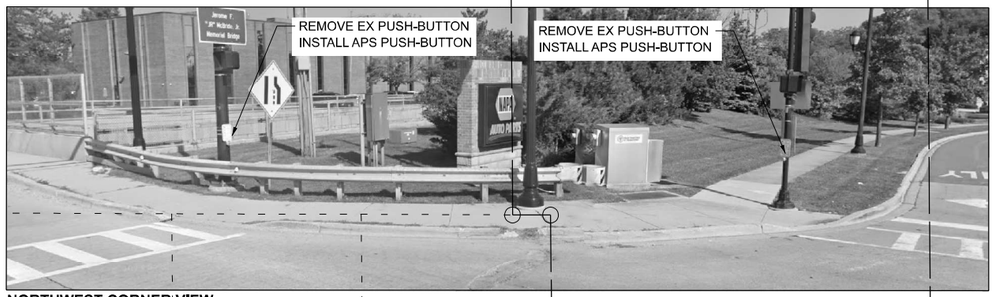

NORTHWEST CORNER VIEW

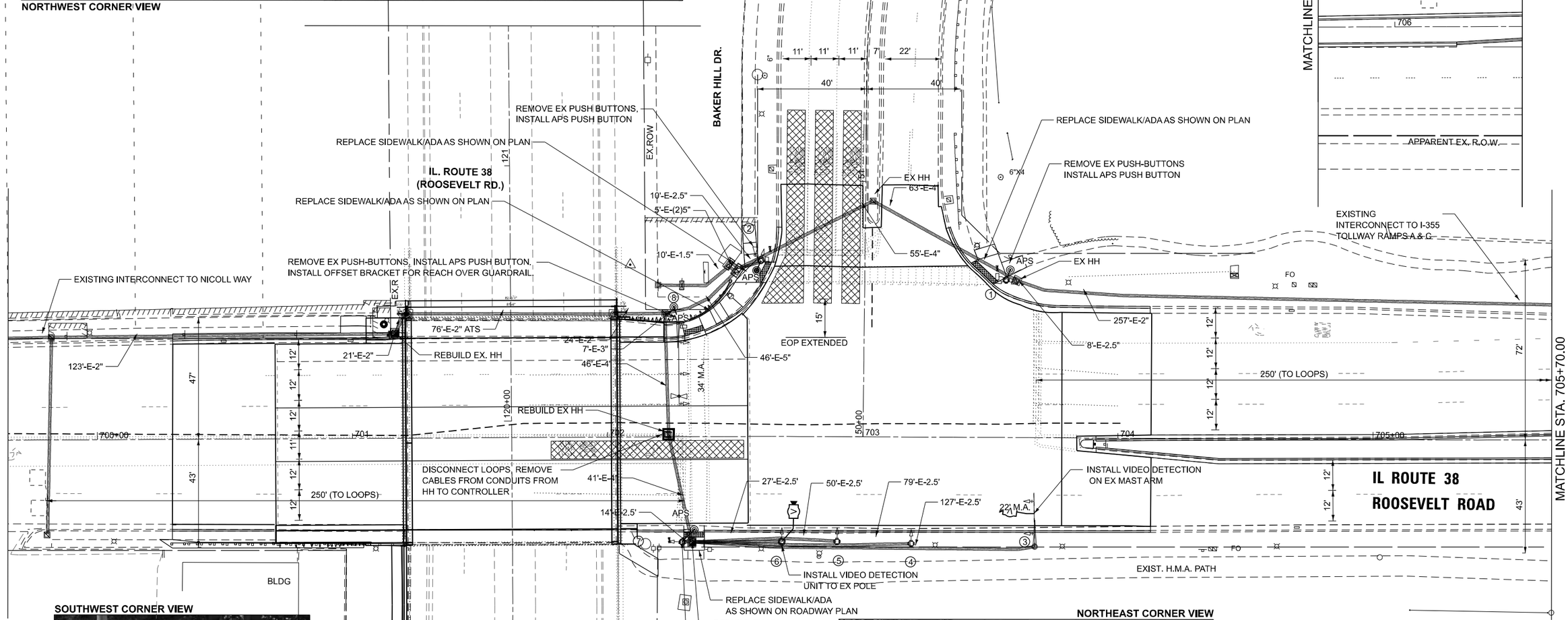

SOUTHWEST CORNER VIEW

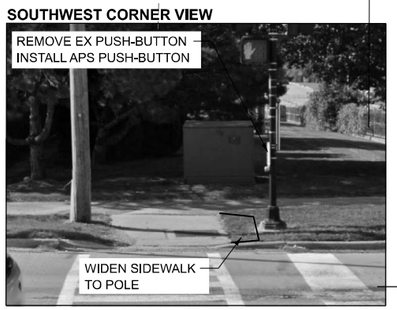

NORTHEAST CORNER VIEW

NOTES:

1) THIS PLAN IS FOR THE PURPOSE OF INSTALLING THE FOLLOWING: APS PEDESTRIAN PUSH-BUTTON, AND TO REPLACE LOOP DETECTION WITH VIDEO/RADAR DETECTION AS SHOWN. ALL OTHER EQUIPMENT SHOWN IS FOR INFORMATION ONLY.

2) THE MOUNTING LOCATIONS OF THE VIDEO DETECTORS WILL BE DETERMINED PER THE MANUFACTURER'S RECOMMENDATION.

3) SEE ADA AND SIDEWALK IMPROVEMENT PLANS FOR DETAILS ON QUADRANT IMPROVEMENTS

DETECTION ZONES

TS #12424

ECON 40

TS SHT NO. 12

MODEL: $MODELNAME$
FILE NAME: pw://mb-us-pw.bentley.com:mb-us-pw-03/Documents/Chicago_IL/01_Projects/D1_IDOT_Var_DEservs_PTB208_005/W01 - 1982943.0 Deliverables/3.3 CADD Data/Sheets/D162117-eh-ts-presignal-plan.dgn

Michael Baker INTERNATIONAL
200 West Adams Street, Suite 1800, Chicago, IL 60606
Phone: (312) 707-6770 · MBAKERINTL.COM

USER NAME = Connor.Liss	DESIGNED - ZJT	REVISED -	
	DRAWN - JB	REVISED -	
PLOT SCALE = 0.16666633 ' / in.	CHECKED - SJS	REVISED -	
PLOT DATE = 8/9/2024	DATE - 02/09/2024	REVISED -	

STATE OF ILLINOIS
DEPARTMENT OF TRANSPORTATION

TRAFFIC SIGNAL PLAN
IL 38 (ROOSEVELT ROAD) OVER IL 53

SCALE: 1"=20' | SHEET 1 OF 2 SHEETS | STA. 700+00.00 TO STA. 706+00.00

F.A.P. RTE.	SECTION	COUNTY	TOTAL SHEETS	SHEET NO.
0347	0347 22 BJ3	DUPAGE	98	43
		CONTRACT NO. 62T17		
		ILLINOIS	FED. AID PROJECT	

EXISTING AND PROPOSED CONTROLLER SEQUENCE

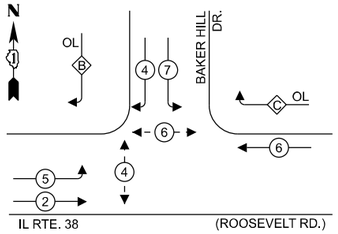

LEGEND:

- PROTECTED PHASE
- PROTECTED/PERMITTED PHASE
- PEDESTRIAN PHASE
- OVERLAP

PHASE DESIGNATION DIAGRAM

OVERLAP LETTER		PERMISSIVE PHASE		PROTECTED PHASE
B	=	4	+	5
C	=	6	+	7

EXISTING AND PROPOSED EMERGENCY VEHICLE PREEMPTION SEQUENCE

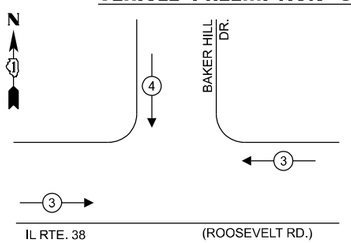

1

TRAFFIC SIGNAL ELECTRICAL SERVICE REQUIREMENTS

TYPE		QUANTITY	UNIT WATTAGE	TOTAL WATTAGE
SIGNAL HEAD	3 - SECTION	7	11	77
	4 - SECTION	0	14	-
	5 - SECTION	6	13	78
PROGRAMMABLE SIGNALS				
	3 - SECTION	-	22	-
	4 - SECTION	-	32	-
	5 - SECTION	-	28	-
PED. SIGNAL		4	15	60
CONTROLLER		1	150	150
MASTER CONTROLLER		-	100	-
UPS		1	25	25
DETECTION	RADAR	-	20	-
	VIDEO	2	20	40
BLANK-OUT SIGN		-	25	-
NETWORK SWITCH II OR III		-	35	-
CELLULAR MODEM		-	15	-
TOTAL UPS SIZING =				430
UPS CHARGING		1	225	225
BATTERY HEATER MAT	1	1	180	180
CABINET HEATER		1	200	200
FLASHER		-	15	-
LED STREET NAME SIGN		-	120	-
LUMINAIRE		-	240	-
TOTAL SERVICE WIRE SIZING =				1035

1

ENERGY COSTS TO: THE VILLAGE OF GLEN ELLYN
535 DUANE STREET
GLEN ELLYN, IL 60137

ENERGY COST SHARE:

ENERGY SUPPLY: CONTACT: NEW BUSINESS DEPARTMENT
PHONE: 866-639-3532
COMPANY: COM ED
ACCOUNT NUMBER: 32544-65000

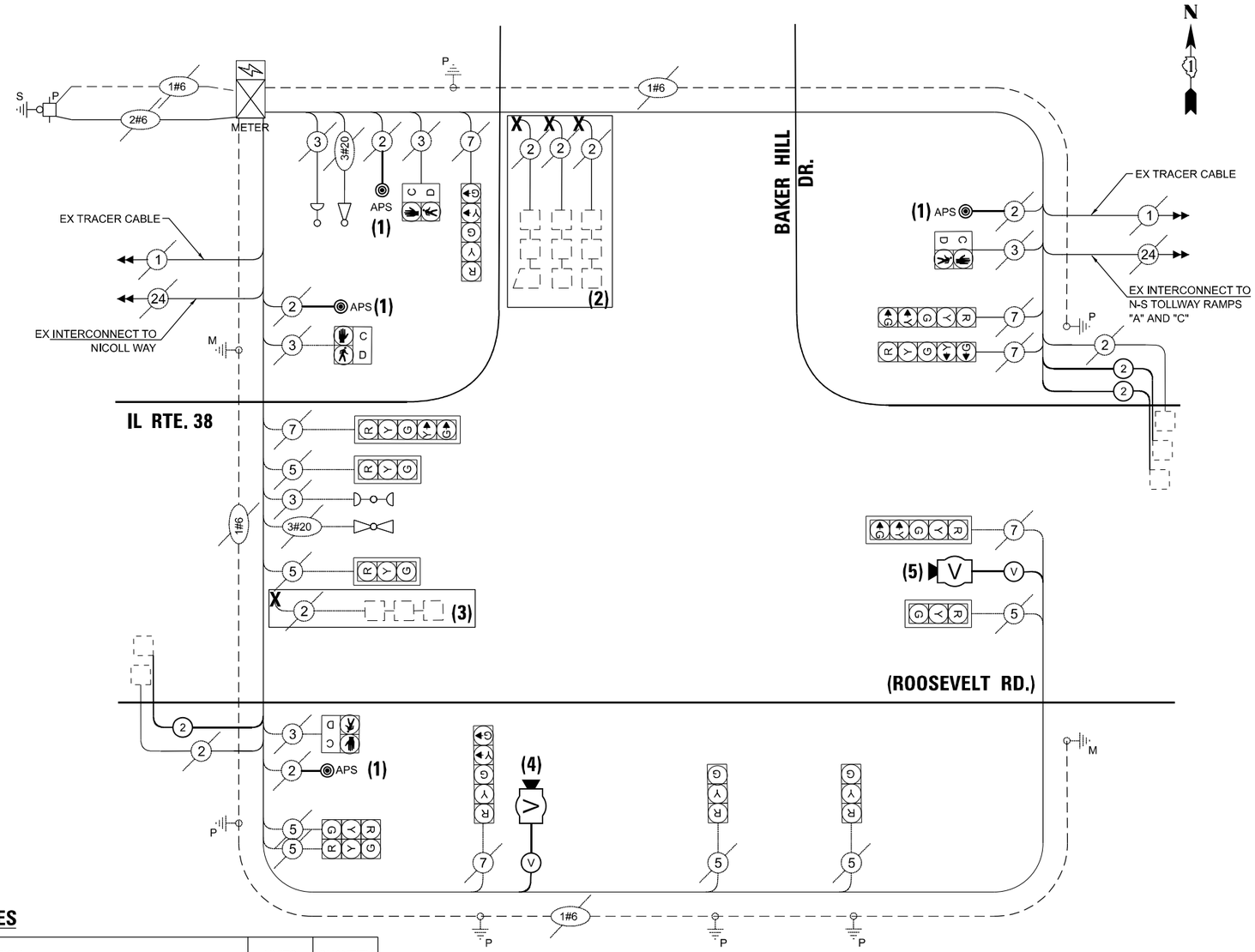

CABLE PLAN

(NOT TO SCALE)

SCHEDULE OF QUANTITIES

ITEM DESCRIPTION	UNITS	QUANTITY
PORTLAND CEMENT CONCRETE SIDEWALK 5 INCH	SQ FT	925
MAINTENANCE OF EXISTING TRAFFIC SIGNAL INSTALLATION	EACH	1
ELECTRIC CABLE IN CONDUIT, LEAD-IN, NO. 14 1 PAIR	FOOT	1266
TEMPORARY TRAFFIC SIGNAL INSTALLATION	EACH	1
MODIFY EXISTING CONTROLLER	EACH	1
REMOVE ELECTRIC CABLE FROM CONDUIT	FOOT	100
INDUCTIVE LOOP DETECTOR	EACH	3
REMOVE EXISTING TRAFFIC SIGNAL EQUIPMENT	EACH	1
REBUILD EXISTING HANDHOLE	EACH	1
VIDEO VEHICLE DETECTION SYSTEM, SINGLE APPROACH	EACH	2
ACCESSIBLE PEDESTRIAN SIGNALS	EACH	4
RE-OPTIMIZE TRAFFIC SIGNAL SYSTEM LEVEL 1	EACH	1
TEMPORARY TRAFFIC SIGNAL TIMING	EACH	1

1

TRAFFIC SIGNAL MODIFICATION NOTES:
(1) REPLACE PEDESTRIAN PUSH BUTTONS WITH APS PUSH BUTTONS
(2) DISCONNECT SB LOOPS, PULL CABLE HH TO CONTROLLER
(3) DISCONNECT EB LOOPS, PULL CABLE HH TO CONTROLLER
(4) INSTALL VIDEO DETECTION FOR SB TURN LANES
(5) INSTALL VIDEO DETECTION FOR EB TURN LANE

TS #12424

ECON 40

1 REVISED SHEET 10/24/2024

TS SHT NO. 13

MODEL: Traffic Signal Wiring [Sheet]
FILE NAME: pw://mb-us-pw.bentley.com:mb-us-pw-03/Documents/Chicago_IL/01_Projects/D1_IDOT_Var_DEservs_PTB208_005/W01 - 1982943.0 Deliverables/3.3 CADD Data/Sheets/D162117-sht-ts-pr-wiring.dgn

Michael Baker INTERNATIONAL
200 West Adams Street, Suite 1800, Chicago, IL 60606
Phone: (312) 707-8770 • MBAKERINTL.COM

USER NAME = Zach.Tanner	DESIGNED - ZJT	REVISED - 10/21/2024 1	
	DRAWN - JR	REVISED -	
PLOT SCALE = 0.16666633 ' / in.	CHECKED - SJS	REVISED -	
PLOT DATE = 10/21/2024	DATE - 08/09/2024	REVISED -	

STATE OF ILLINOIS
DEPARTMENT OF TRANSPORTATION

CABLE PLAN, PHASE DESIGNATION DIAGRAM, EMERGENCY VEHICLE PREEMPTION SEQUENCE, ROOSEVELT ROAD AND BAKER HILL DR

SCALE: 1"=20' | SHEET 2 OF 2 SHEETS | STA. | TO STA.

F.A.P. RTE.	SECTION	COUNTY	TOTAL SHEETS	SHEET NO.
0347	0347 22 BJ3	DUPAGE	98	44
		CONTRACT NO. 62T17		
		ILLINOIS	FED. AID PROJECT	

Existing Structure: S.N. 022-0163 built as F.A.P Route 567 Sec. (CY, CR & 533H) R-4(85) in 1989 and widened in 1997 to 6 lanes and 2 sidewalks. The superstructure consist of simple span composite rolled W36X232 (original) and W33x201 (widened) beams with a total length of 84'-0" back-to-back abutment. The bridge width is 89'-0" out-to-out. The substructure consists of closed abutments on spread footings.

Traffic will be maintained utilizing staged construction.

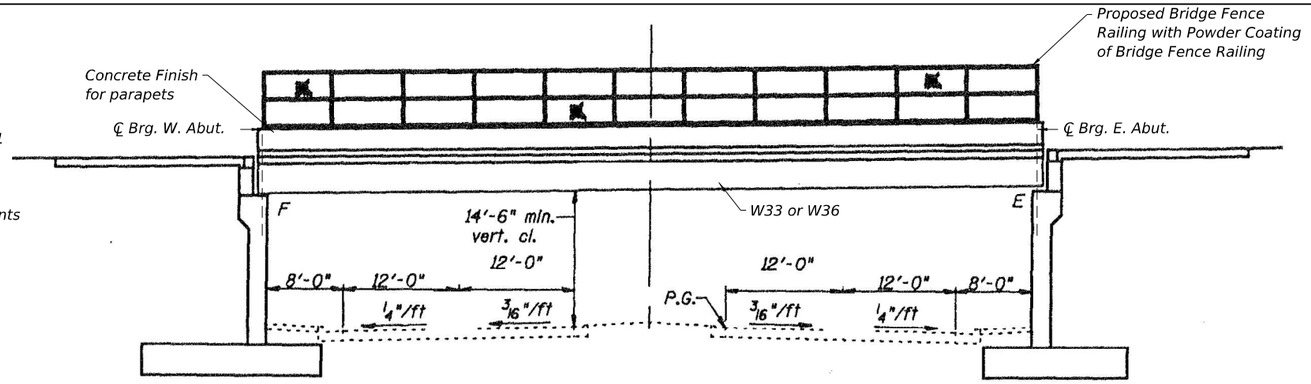

ELEVATION

Note: up to 1/4 inch may be ground off the concrete overlay on bridge deck and bridge approach slabs.

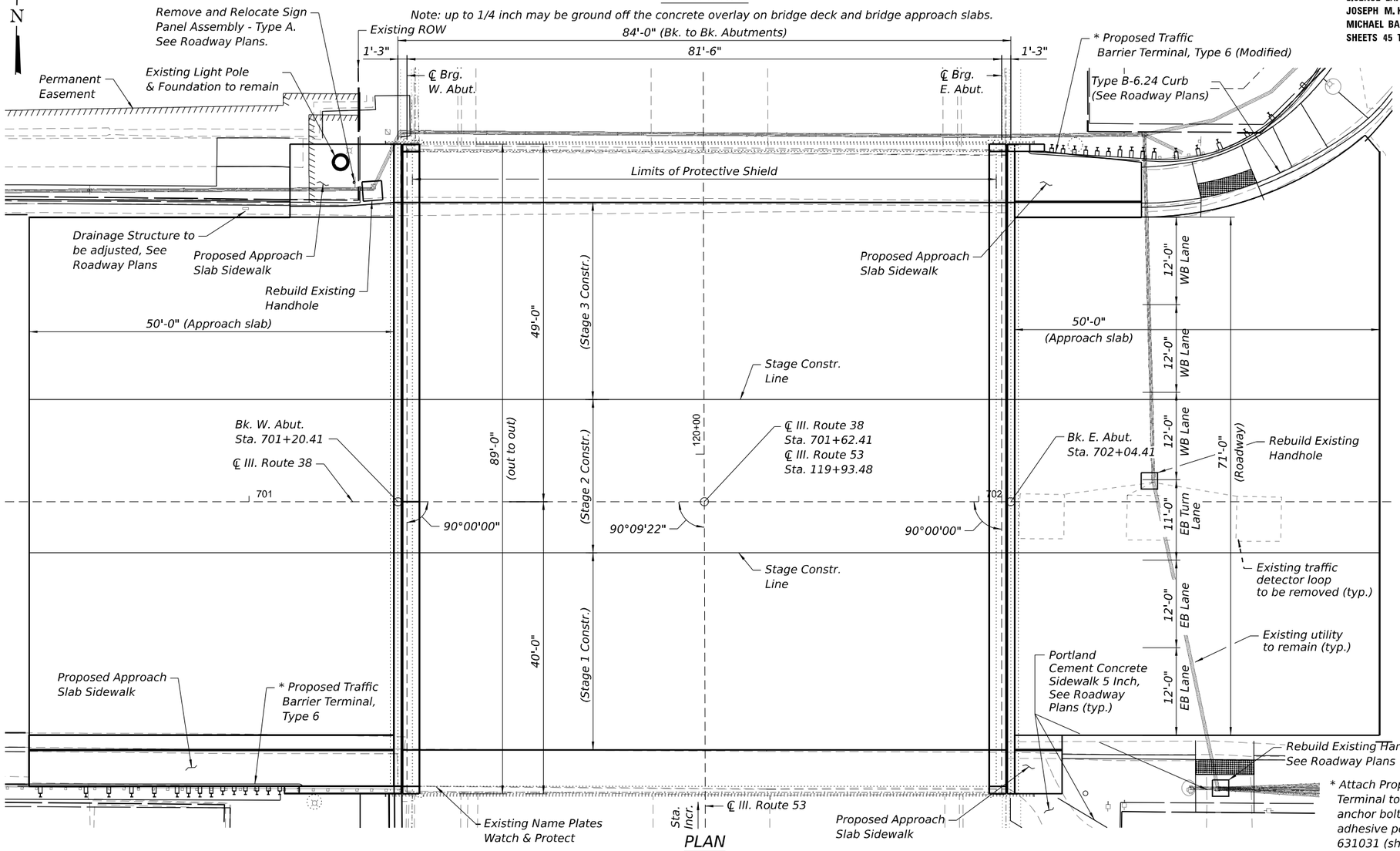

PLAN

DESIGN SPECIFICATIONS

2002 AASHTO Standard Specifications for Highway Bridges, 17th Edition

LOADING HS20-44

No allowance for future wearing surface

EXISTING DESIGN STRESSES

1989 CONSTRUCTION

f'c = 3,500 psi
fy = 60,000 (reinf.)
fy = 36,000 psi (structural steel)

1997 CONSTRUCTION

f'c = 3,500 psi
fy = 60,000 (reinf.)
fy = 36,000 psi (M270 Gr. 36 structural steel)

PROPOSED DESIGN STRESSES

FIELD UNITS:

f'c = 4,000 psi (Superstructure)
fy = 60,000 (reinforcement)

STATE OF ILLINOIS
JOSEPH M. KAUZLARICH
081-007934
ELMHURST
ILLINOIS
LICENSED STRUCTURAL ENGINEER

DATE: 08/09/2024

LICENSE EXPIRES 11-30-2024
JOSEPH M. KAUZLARICH
MICHAEL BAKER INTERNATIONAL
SHEETS 45 TO 88

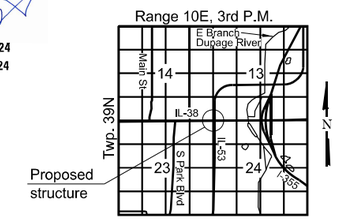

LOCATION SKETCH

SCOPE OF WORK

1. Remove bridge fence railing at appropriate stage. Coordinate with expansion joint parapet construction.
2. Remove sidewalk quadrants adjacent to the bridge and replace with Approach Slab Sidewalk. Dowel into existing adjacent approach slab.
3. Remove and replace expansion joints at both abutments with Preformed Strip Seals.
4. Perform partial and full depth repairs to bridge deck.
5. Replace curb and gutter adjacent to bridge approach slab.
6. Scarify bridge deck and approach slab 3/4" and install Bridge Deck Latex Concrete Overlay, 2 3/4" on bridge and approach slab.
7. Perform 1/4" Diamond Grinding and Longitudinal Grooving on new concrete overlay.
8. Perform Structural Repair of Concrete at abutments and adjacent retaining walls.
9. Prepare the surface of existing parapets and apply Concrete Finish to existing & proposed parapets at appropriate stage.
10. Apply Concrete Sealer to top/inside surfaces of parapets and existing sidewalks.
11. Replace Bridge Fence Railing after Powder Coating at appropriate stage.
12. Apply Protective Coat on the top surface of the deck overlay and on new concrete of the joint replacement.

GENERAL PLAN AND ELEVATION
ILL. RTE. 38 OVER ILL. RTE. 53
F.A.P. 0347
SEC. 0347 22 BJ3
DUPAGE COUNTY
STATION 701+62.41
STRUCTURE NO. 022-0163

MODEL: Default
FILE NAME: pw://mb-us-pw.bentley.com:mb-us-pw-03/Documents/Chicago_IL/01_Projects/D1_IDOT_Var_DEservs_PTB208_005/W01 - 198294/3.0 Deliverables/3.3 CADD Data/Sheets/0220163-62T17-001-GPE.dgn
9/16/2024 4:41:35 PM

Michael Baker INTERNATIONAL

USER NAME = Connor.Liss	DESIGNED MLK	REVISED -	
	CHECKED JMK	REVISED -	
PLOT SCALE =	DRAWN JHJ	REVISED -	
PLOT DATE = 9/16/2024	CHECKED MLK/JMK	REVISED -	

STATE OF ILLINOIS
DEPARTMENT OF TRANSPORTATION

GENERAL PLAN & ELEVATION
STRUCTURE NO. 022-0163

SHEET S-1 OF S-44 SHEETS

F.A.P. RTE.	SECTION	COUNTY	TOTAL SHEETS	SHEET NO.
0347	0347 22 BJ3	DUPAGE	98	45
		CONTRACT NO. 62T17		
	ILLINOIS	FED. AID PROJECT		

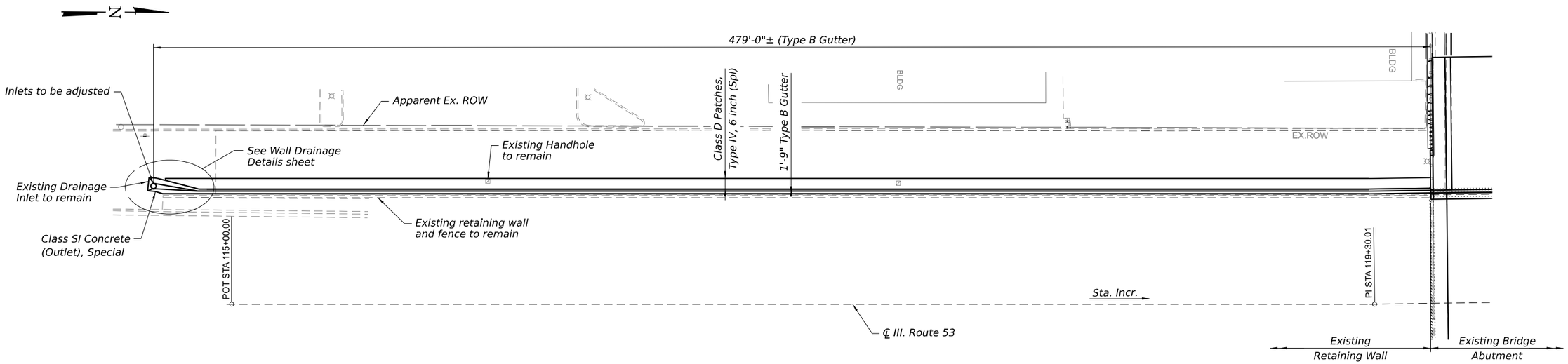

PLAN

MODEL: Default
FILE NAME: pw://mb-us-pw.bentley.com:mb-us-pw-03/Documents/Chicago_IL/01_Projects/D1_IDOT_Var_DEservs_PTB208_005/W01 - 198294/3.0 Deliverables/3.3 CADD Data/Sheets/0220163-62T17-002-GPE2.dgn

9/20/2024 3:45:07 PM

Michael Baker INTERNATIONAL

USER NAME = $USER$	DESIGNED MLK	REVISED -	
	CHECKED JMK	REVISED -	
PLOT SCALE =	DRAWN JHJ	REVISED -	
PLOT DATE = 9/20/2024	CHECKED MLK/JMK	REVISED -	

STATE OF ILLINOIS
DEPARTMENT OF TRANSPORTATION

GENERAL PLAN & ELEVATION
STRUCTURE NO. 022-0163

SHEET S-2 OF S-44 SHEETS

F.A.P. RTE.	SECTION	COUNTY	TOTAL SHEETS	SHEET NO.
0347	0347 22 BJ3	DUPAGE	98	46
		CONTRACT NO. 62T17		
	ILLINOIS	FED. AID PROJECT		

GENERAL NOTES

1. No field welding is permitted except as specified in the contract documents.

2. Reinforcement bars designated (E) shall be epoxy coated.

3. Prior to pouring the new concrete deck, all heavy or loose rust, loose mill scale, and other loose detrimental foreign material shall be removed from the surfaces in contact with concrete (SSPC - SP3 standards). Tightly adhered paint may remain unless otherwise noted. Removal shall be accomplished by methods that will not damage the steel and the cost will be paid for according to Article 109.04 of the Standard Specifications.

4. As directed by the Engineer, existing construction accessories welded to the top flange of beams and girders shall be removed. The weld areas shall be ground flush and inspected for cracks using magnetic particle testing (MT) or dye penetrant testing (PT) by qualified personnel approved by the Engineer. Any cracks that cannot be removed by grinding 1/4" in. deep shall be identified and reported to the Bureau of Bridges & Structures for further disposition. The cost of removing welded accessories, grinding and inspecting weld areas and grinding cracks will be paid for according to Article 109.04 of the Standard Specifications.

5. Plan dimensions and details relative to the existing structure have been taken from the existing plans and are subject to nominal construction variation. The Contractor shall field verifyexisting dimensions and details affecting new construction and make necessary approved adjustments prior to construction or ordering of materials. Such variation shall not be cause for additional compensation for a change in scope of the work, however, the Contractor will be paid for the quantity actually furnished at the unit price bid for the work.

6. Existing reinforcement extending into the removal area shall be cleaned, straightened, and incorporated into the new construction. Any existing reinforcement bars intended for reuse and damaged during the concrete removal operations shall be repaired or replaced using an approved bar splicer or anchorage system to the satisfaction of the Engineer. Cost included with Concrete Removal.

7. The Contractor shall take appropriate measures to assure the Protective Coat is not applied to the drainage inlet.

8. Joint openings shall be adjusted according to Article 520.04 of the Standard Specifications when the deck is poured at an ambient temperature other than 50°F.

9. A film forming Concrete Sealer shall be applied to the top and inside surfaces of the existing parapets and sidewalk.

10. Protective Coat shall be applied to the top surface of the concrete deck overlay and on new concrete at the joint replacements.

INDEX OF SHEETS

TOTAL BILL OF MATERIAL

ITEM	UNIT	SUPER	SUB	TOTAL
Concrete Removal	Cu Yd	27.8	---	27.8
Protective Shield	Sq Yd	818	---	818
Structure Excavation	Cu Yd	---	51	51
Concrete Superstructure	Cu Yd	27.7	---	27.7
Protective Coat	Sq Yd	1,652	---	1,652
Concrete Superstructure (Approach Slab)	Cu Yd	60.5	---	60.5
Reinforcement Bars, Epoxy Coated	Pound	25,940	---	25,940
Bar Splicers	Each	48	---	48
Bridge Fence Railing	Foot	163	---	163
Preformed Joint Strip Seal	Foot	178	---	178
Concrete Sealer	Sq Ft	1,613	---	1,613
Rebuild Existing Handhole	Each	2	---	2
Bridge Deck Latex Concrete Overlay, 2 3/4 Inches	Sq Yd	1,493	---	1,493
Bridge Deck Scarification 3/4"	Sq Yd	1,493	---	1,493
Structural Repair Of Concrete (Depth Equal To Or Less Than 5 Inches)	Sq Ft	---	1,280	1,280
Structural Repair Of Concrete (Depth Greater Than 5 Inches)	Sq Ft	---	60	60
Deck Slab Repair (Full Depth, Type II)	Sq Yd	2	---	2
Drainage Structures To Be Adjusted	Each	1	---	1
Drainage Structures To Be Cleaned	Each	1	---	1
Diamond Grinding (Bridge Section)	Sq Yd	1,427	---	1,427
Temporary Shoring And Cribbing	Each	---	6	6
Clean & Reseal Relief Joint	Foot	154	---	154
Bridge Deck Grooving (Longitudinal)	Sq Yd	1,493	---	1,493
Concrete Finish	L Sum	1	---	1
Powder Coating Of Bridge Fence Railing	L Sum	1	---	1
Steel Railing Removal	Foot	163	---	163

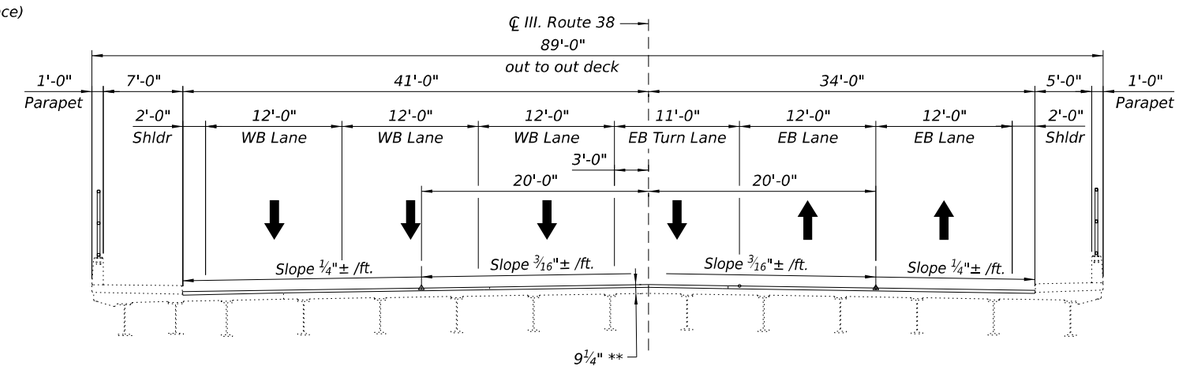

FINAL CROSS SECTION

(Looking East)
** After 1/4" diamond grinding

MODEL: Default
FILE NAME: pw://mb-us-pw.bentley.com:mb-us-pw-03/Documents/Chicago_IL/01_Projects/D1_IDOT_Var_DEservs_PTB208_005/W01 - 198294/3.0 Deliverables/3.3 CADD Data/Sheets/0220163-62T17-003-GenData.dgn

9/16/2024 2:40:23 PM

Michael Baker INTERNATIONAL

USER NAME = Connor.Liss	DESIGNED MLK	REVISED -	
	CHECKED JMK	REVISED -	
PLOT SCALE =	DRAWN JHJ	REVISED -	
PLOT DATE = 9/16/2024	CHECKED MLK/JMK	REVISED -	

STATE OF ILLINOIS
DEPARTMENT OF TRANSPORTATION

GENERAL DATA
STRUCTURE NO. 022-0163

SHEET S-3 OF S-44 SHEETS

F.A.P. RTE.	SECTION	COUNTY	TOTAL SHEETS	SHEET NO.
0347	0347 22 BJ3	DUPAGE	98	47

CONTRACT NO. 62T17

ILLINOIS FED. AID PROJECT

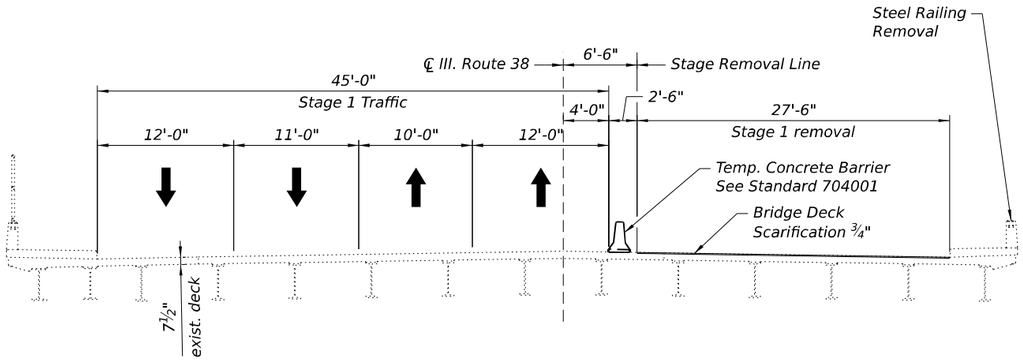

STAGE 1 REMOVAL

(Looking East)

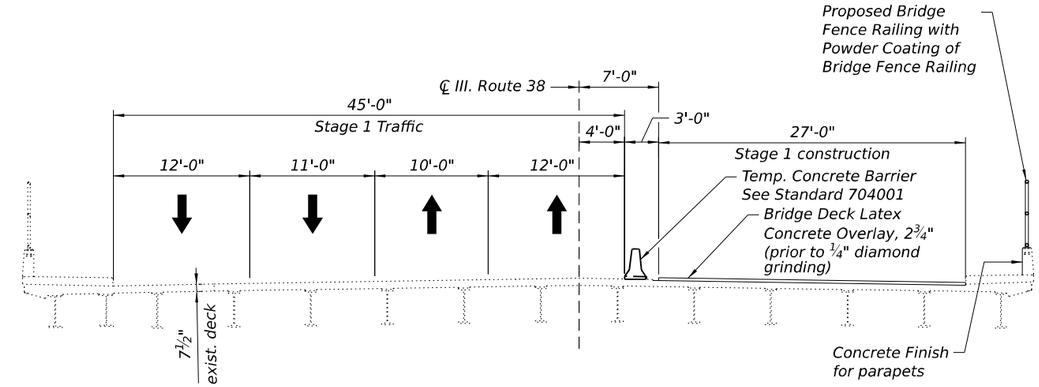

STAGE 1 CONSTRUCTION

(Looking East)

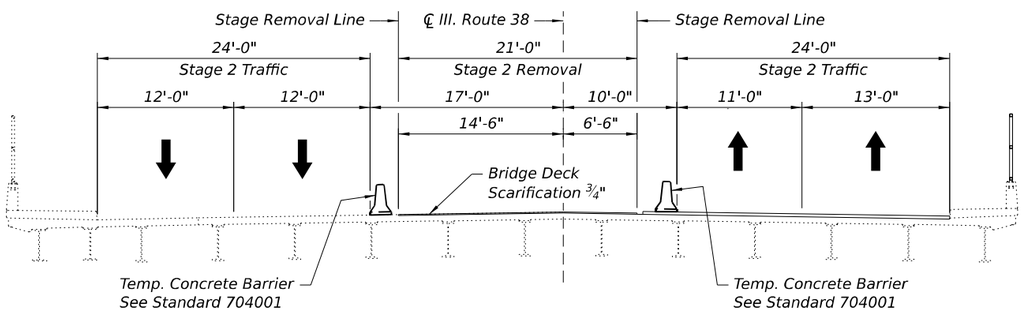

STAGE 2 REMOVAL

(Looking East)

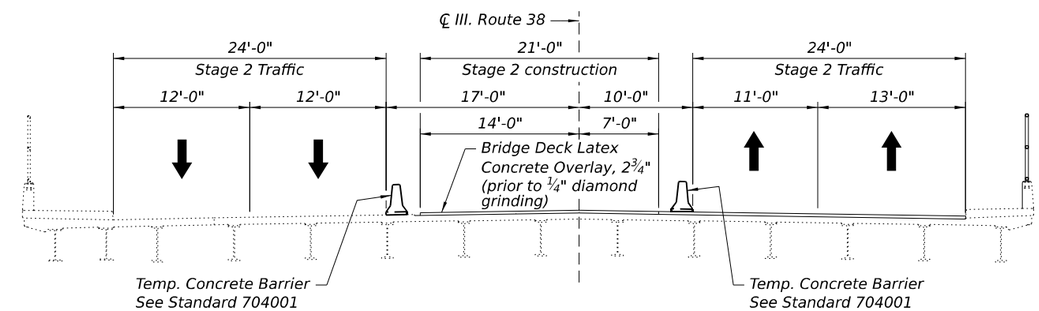

STAGE 2 CONSTRUCTION

(Looking East)

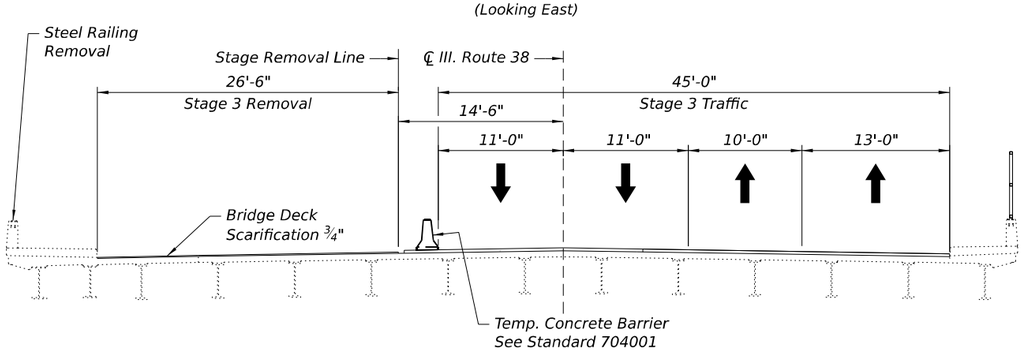

STAGE 3 REMOVAL

(Looking East)

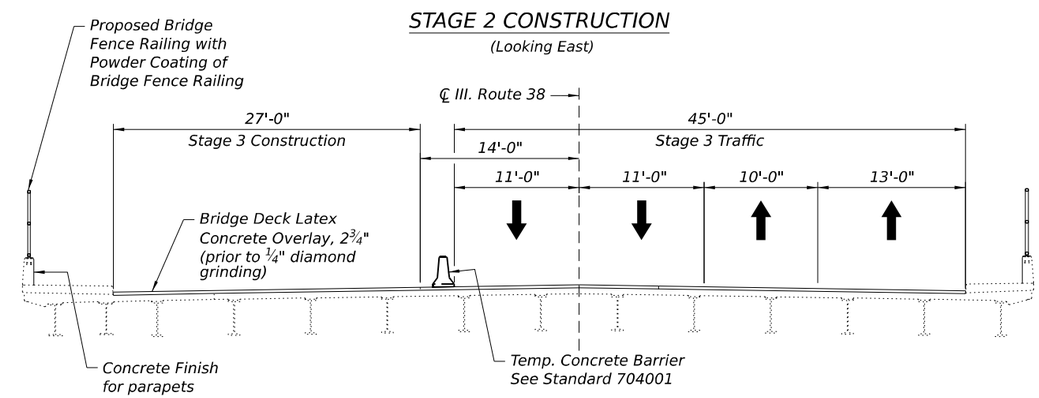

STAGE 3 CONSTRUCTION

(Looking East)

MODEL: Default
FILE NAME: pw://mb-us-pw.bentley.com:mb-us-pw-03/Documents/Chicago_IL/01_Projects/D1_IDOT_Var_DEserve_PTB208_005/W01 - 198294/3.0 Deliverables/3.3 CADD Data/Sheets/0220163-62T17-004-StgConstruct.dgn

9/16/2024 2:40:31 PM

Michael Baker INTERNATIONAL

USER NAME = Connor.Liss	DESIGNED MLK	REVISED -	
	CHECKED JMK	REVISED -	
PLOT SCALE =	DRAWN JHJ	REVISED -	
PLOT DATE = 9/16/2024	CHECKED MLK/JMK	REVISED -	

STATE OF ILLINOIS
DEPARTMENT OF TRANSPORTATION

STAGE CONSTRUCTION
STRUCTURE NO. 022-0163

SHEET S-4 OF S-44 SHEETS

F.A.P. RTE.	SECTION	COUNTY	TOTAL SHEETS	SHEET NO.
0347	0347 22 BJ3	DUPAGE	98	48
		CONTRACT NO. 62T17		
	ILLINOIS	FED. AID PROJECT		

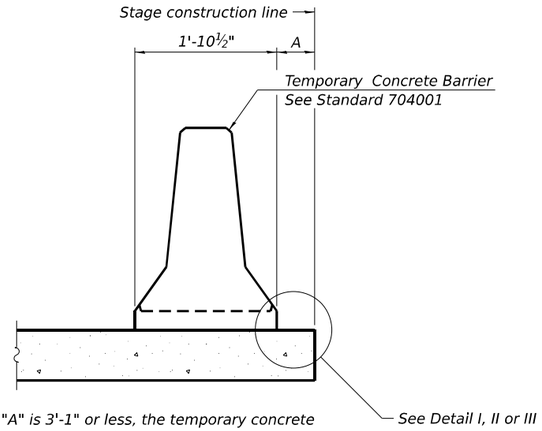

When "A" is 3'-1" or less, the temporary concrete barrier shall be restrained to the new slab according to Detail I, II or III. No restraint is required when "A" is greater than 3'-1".

NEW SLAB OR NEW DECK BEAM

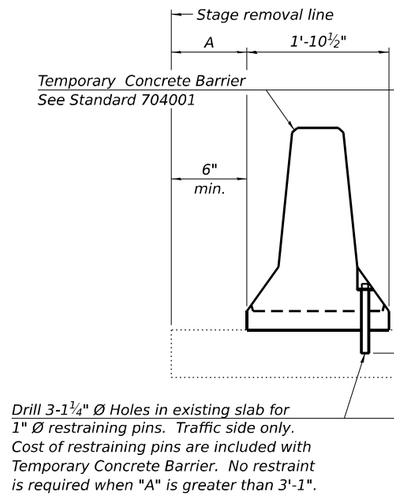

EXISTING SLAB

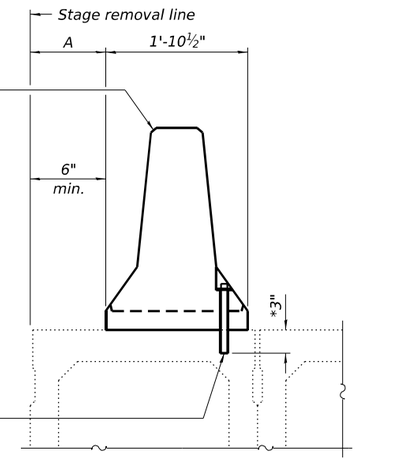

* When hot-mix asphalt wearing surface is present, embedment shall be 3" plus the wearing surface depth.

EXISTING DECK BEAM

SECTIONS THRU SLAB OR DECK BEAM

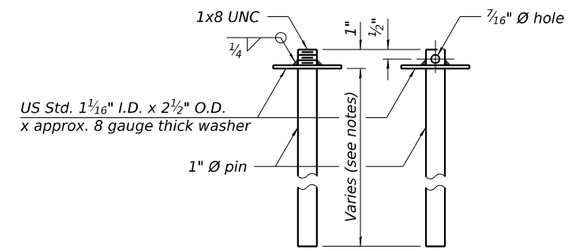

RESTRAINING PIN

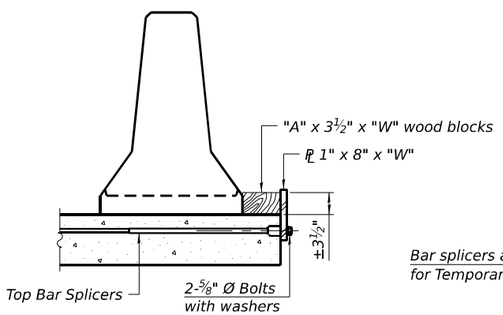

DETAIL I

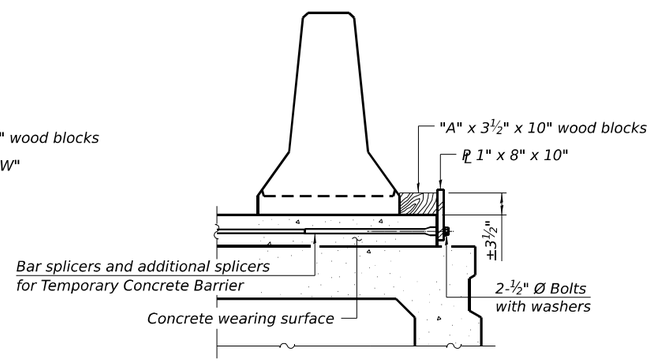

DETAIL II

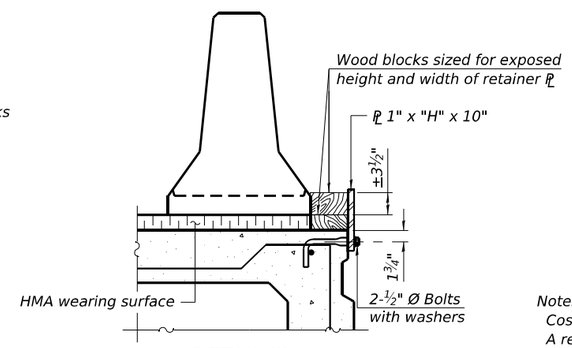

DETAIL III

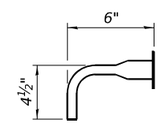

BAR SPLICER FOR #4 BAR - DETAIL III

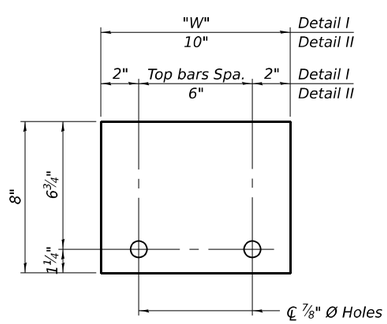

STEEL RETAINER PL 1" x 8" x "W"

(Detail I and II)

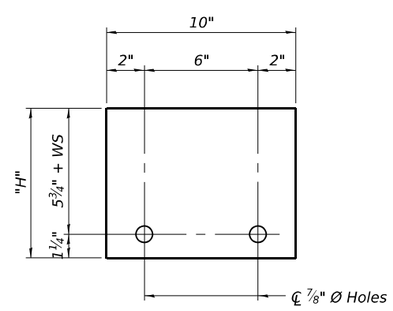

STEEL RETAINER PL 1" x "H" x 10"

(Detail III)

RAILING CRITERIA

NCHRP 350 Test Level	3
Railing Weight (plf)	440

Notes:

Cost of retainer assembly is included with Temporary Concrete Barrier.

A retainer assembly shall be located at the approximate ℄ of each temporary concrete barrier.

The retainer plate shall not be removed until the concrete on the adjacent stage is ready to be poured. For Detail III applications the retainer plate shall not be removed until just prior to placing the adjacent beam.

When the 'A' dimension is less than 1½", the wood block shall be omitted and the barrier shall be placed in direct contact with the steel retainer plate. For deck beam applications the minimum required 'A' distance is 6" to accommodate the shear key clamping device.

Detail I - Installation for a new bridge deck or bridge slab.

Detail II - Installation for a new deck beam with an initial concrete wearing surface. Additional bar splicers shall be provided at 6'-0" centers and paired with the bar splicers of the concrete wearing surface reinforcement to accommodate the installation of the retainer assemblies. The cost of the additional bar splicers is included with the concrete wearing surface.

Detail III - Installation for a new deck beam with no initial wearing surface or with an initial hot-mix asphalt (HMA) wearing surface present. The deck beam directly beneath the temporary concrete barrier shall be fabricated with bar splicer inserts in the side of the beam, as detailed, to accommodate the installation of the retainer assemblies. A pair of bar splicers, 6" apart, shall be placed at 6'-0" centers along the length of the beam. The cost of the bar splicers is included with the deck beam.

R-27

5-15-2023

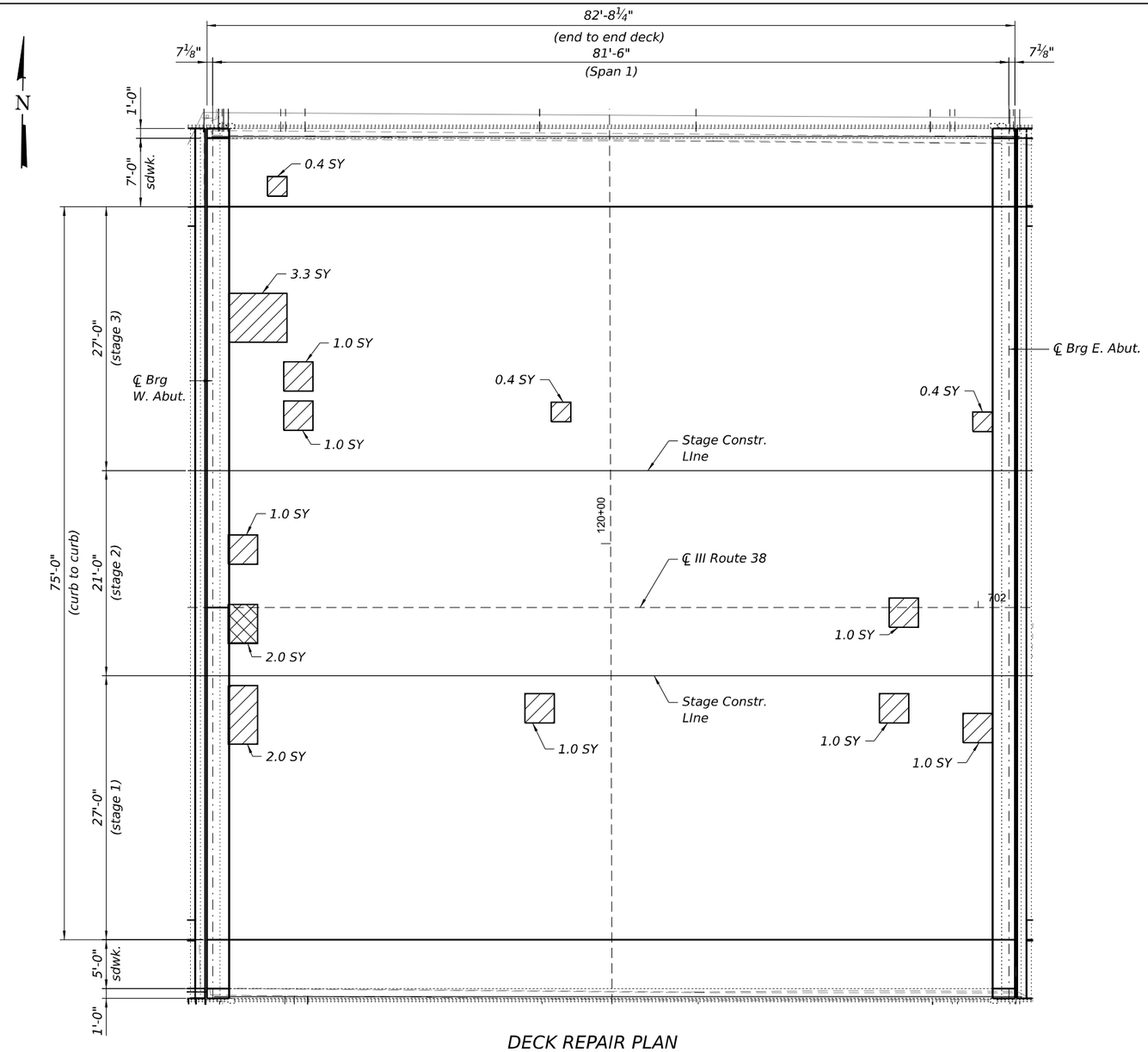

DECK REPAIR PLAN

NOTES:

1. Deck Slab Repair (Partial) locations and quantities are shown for information only and will not be measured for payment but shall be included in the cost of Bridge Deck Latex Concrete Overlay. See special provision for Bridge Deck Latex Concrete Overlay.

BILL OF MATERIAL

Item	Unit	Quantity
Deck Slab Repair (Full Depth, Type II)	Sq. Yd.	2

LEGEND

Deck Slab Repair (Partial)

Deck Slab Repair (Full Depth, Type II)

MODEL: Default
FILE NAME: pw://mb-us-pw.bentley.com:mb-us-pw-03/Documents/Chicago_IL/01_Projects/D1_IDOT_Var_DEserve_PTB208_005/W01 - 198234/3.0 Deliverables/3.3 CADD Data/Sheets/0220163-62T17-006-Deck Repairs.dgn

8/9/2024 3:14:35 PM

Michael Baker INTERNATIONAL

USER NAME = Connor,Liss	DESIGNED MLK	REVISED -	
	CHECKED JMK	REVISED -	
PLOT SCALE =	DRAWN JHJ	REVISED -	
PLOT DATE = 8/9/2024	CHECKED MLK/JMK	REVISED -	

STATE OF ILLINOIS
DEPARTMENT OF TRANSPORTATION

DECK REPAIRS
STRUCTURE NO. 022-0163

SHEET S-6 OF S-44 SHEETS

F.A.P. RTE.	SECTION	COUNTY	TOTAL SHEETS	SHEET NO.
0347	0347 22 BJ3	DUPAGE	98	50
		CONTRACT NO. 62T17		
	ILLINOIS	FED. AID PROJECT		

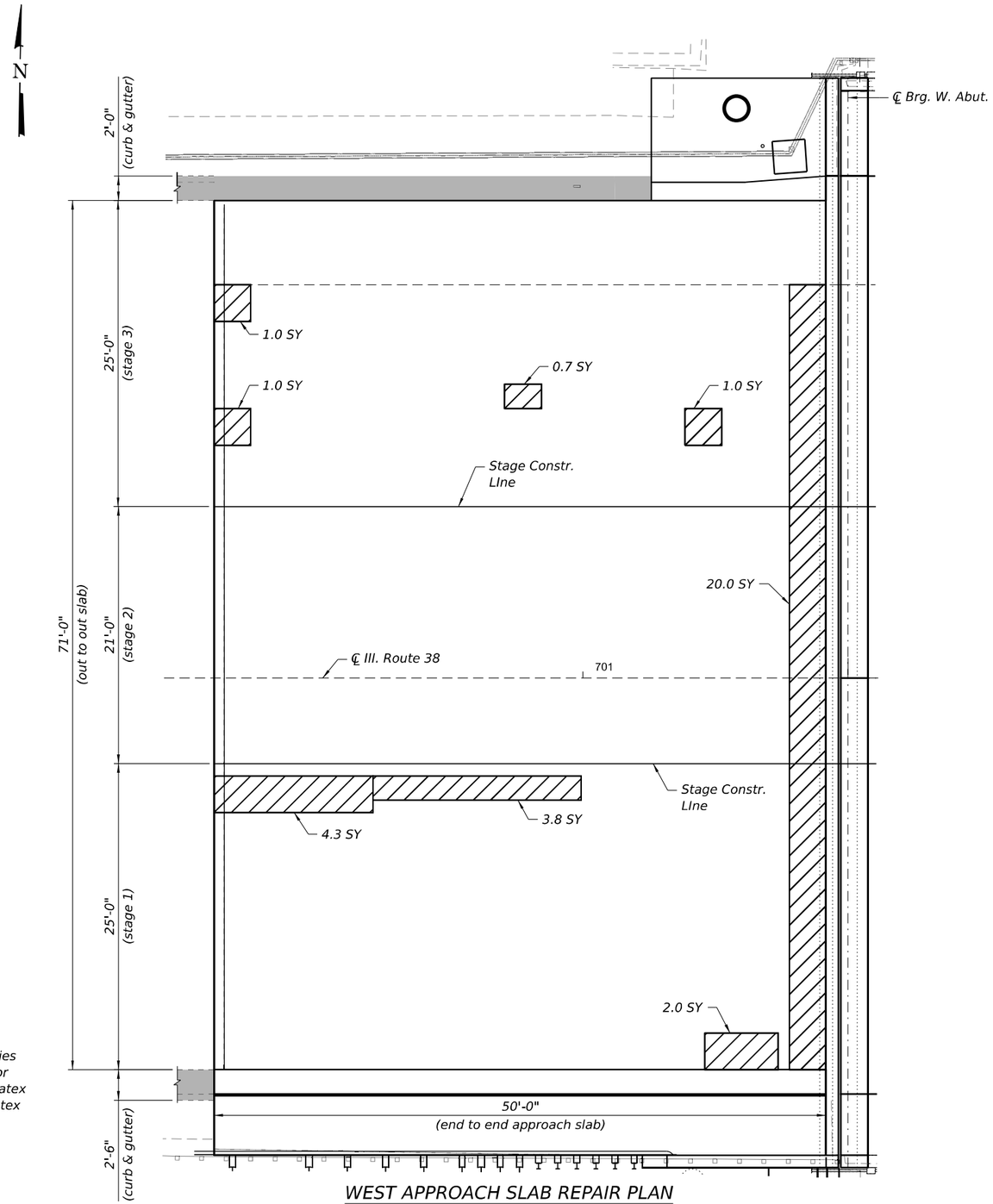

WEST APPROACH SLAB REPAIR PLAN

NOTES:

1. Approach Slab Repair (Partial Depth) locations and quantities are shown for information only and will not be measured for payment but shall be included in the cost of Bridge Deck Latex Concrete Overlay. See special provision for Bridge Deck Latex Concrete Overlay.

LEGEND

Approach Slab Repair (Partial Depth)

Curb and Gutter
Removal and Replacement
(See Roadway Plans)

MODEL: Default
FILE NAME: pw://mb-us-pw.bentley.com:mb-us-pw-03/Documents/Chicago_IL/01_Projects/D1_IDOT_Var_DEservs_PTB208_005/W01 - 198234/3.0 Deliverables/3.3 CADD Data/Sheets/0220163-62T17-007-AppSlabRepairs.dgn
8/9/2024 3:14:51 PM

Michael Baker INTERNATIONAL

USER NAME = Connor.Liss	DESIGNED MLK	REVISED -	
	CHECKED JMK	REVISED -	
PLOT SCALE =	DRAWN JHJ	REVISED -	
PLOT DATE = 8/9/2024	CHECKED MLK/JMK	REVISED -	

STATE OF ILLINOIS
DEPARTMENT OF TRANSPORTATION

APPROACH SLAB REPAIRS
STRUCTURE NO. 022-0163

SHEET S-7 OF S-44 SHEETS

F.A.P. RTE.	SECTION	COUNTY	TOTAL SHEETS	SHEET NO.
0347	0347 22 BJ3	DUPAGE	98	51
		CONTRACT NO. 62T17		
	ILLINOIS	FED. AID PROJECT		

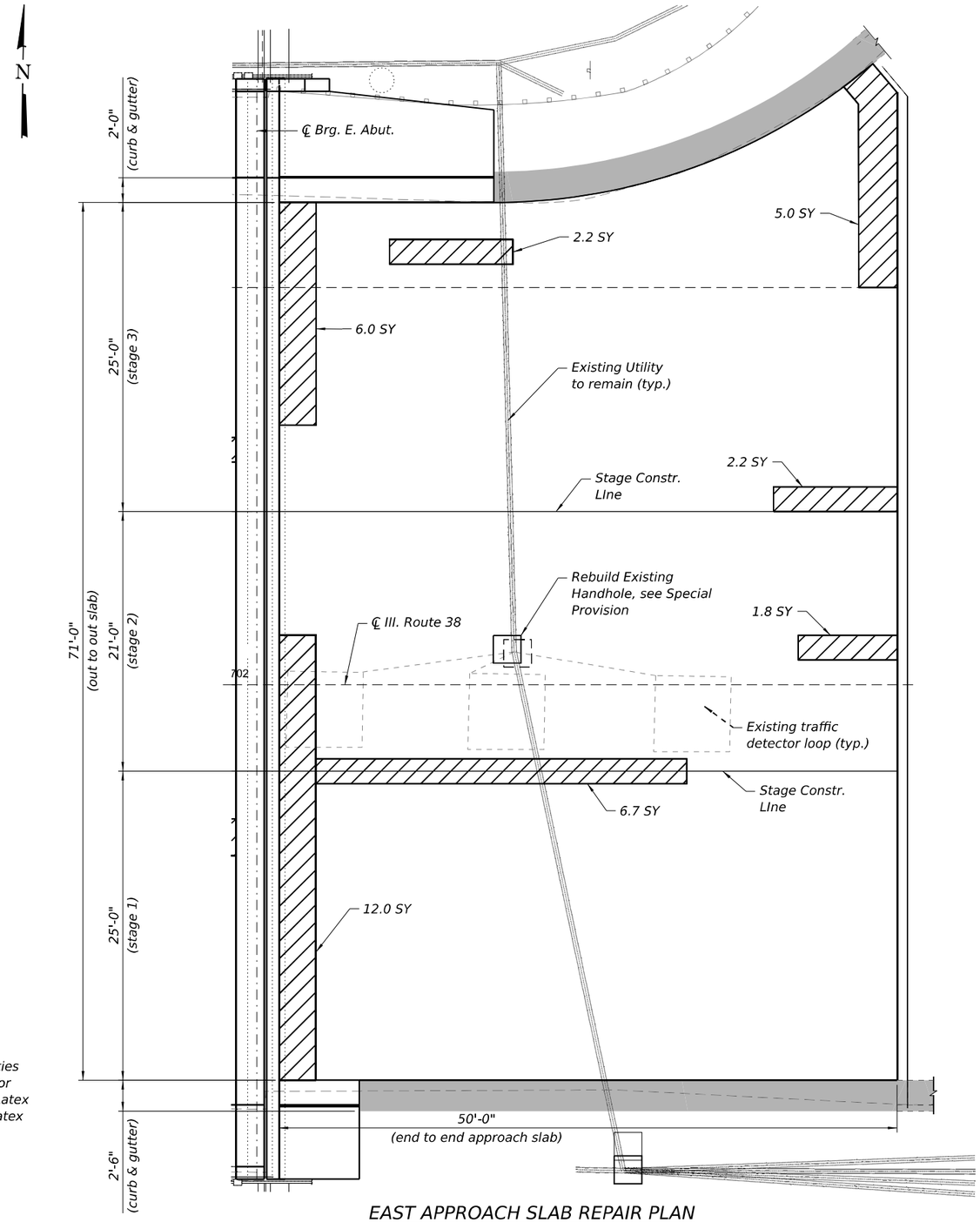

EAST APPROACH SLAB REPAIR PLAN

BILL OF MATERIAL

Item	Unit	Quantity
Approach Slab Repair (Partial Depth)	Sq. Yd.	36
Rebuild Existing Handhole	Each	1

NOTES:

1. Approach Slab Repair (Partial Depth) locations and quantities are shown for information only and will not be measured for payment but shall be included in the cost of Bridge Deck Latex Concrete Overlay. See special provision for Bridge Deck Latex Concrete Overlay.

LEGEND

Approach Slab Repair (Partial Depth)

Curb and Gutter
Removal and Replacement
(See Roadway Plans)

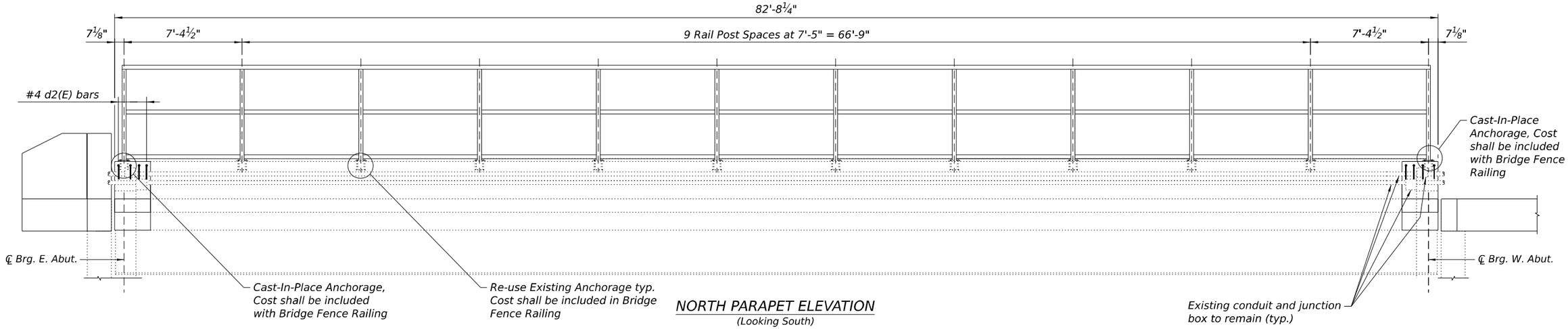

NORTH PARAPET ELEVATION

(Looking South)

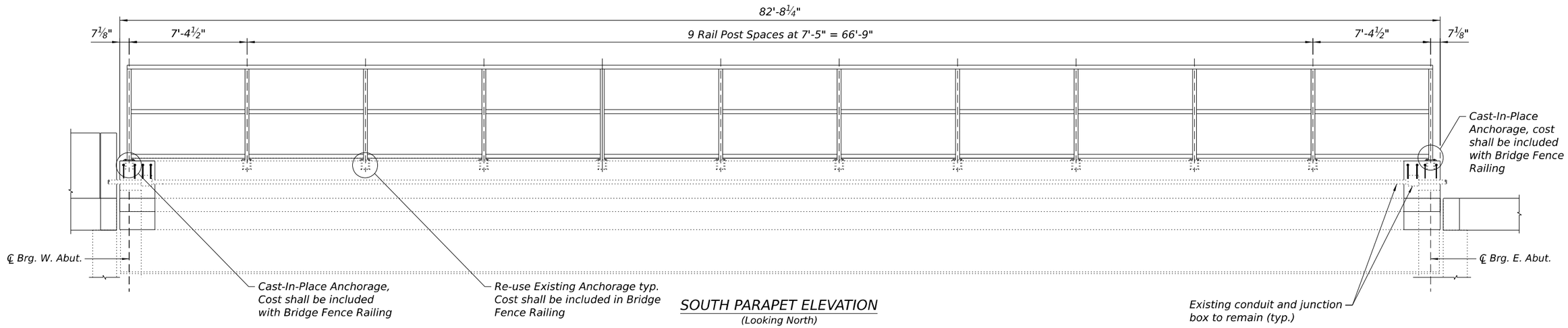

SOUTH PARAPET ELEVATION

(Looking North)

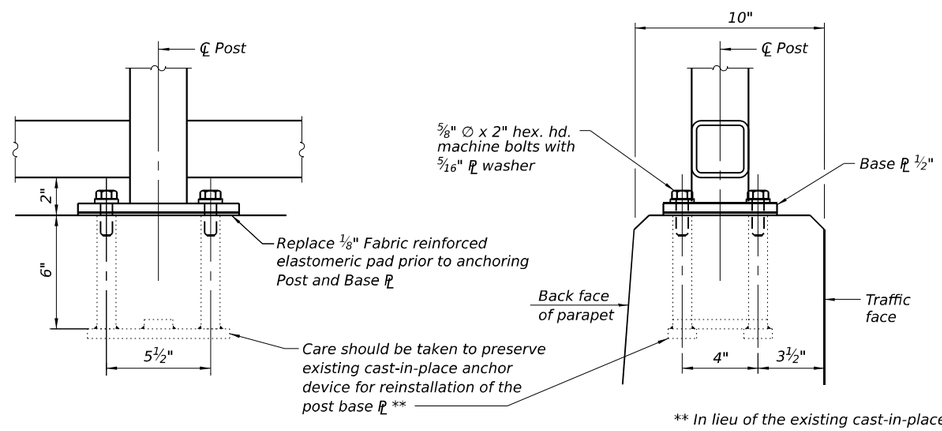

RE-USE EXISTING ANCHORAGE DETAILS

** In lieu of the existing cast-in-place anchor device shown, the Contractor has the option of- drilling and setting ⅝" ∅ anchor rods according to Article 509.06 of the Standard Specifications. Embedment shall be according to the manufacturer's specifications. Place reinforcement bars to miss anchor rod locations. Modify fence post spacing to miss existing anchorage locations.

BILL OF MATERIAL

Item	Unit	Quantity
Steel Railing Removal	Foot	163
Bridge Fence Railing	Foot	163
Concrete Finish	L Sum	1
Powder Coating of Bridge Fence Railing	L Sum	1

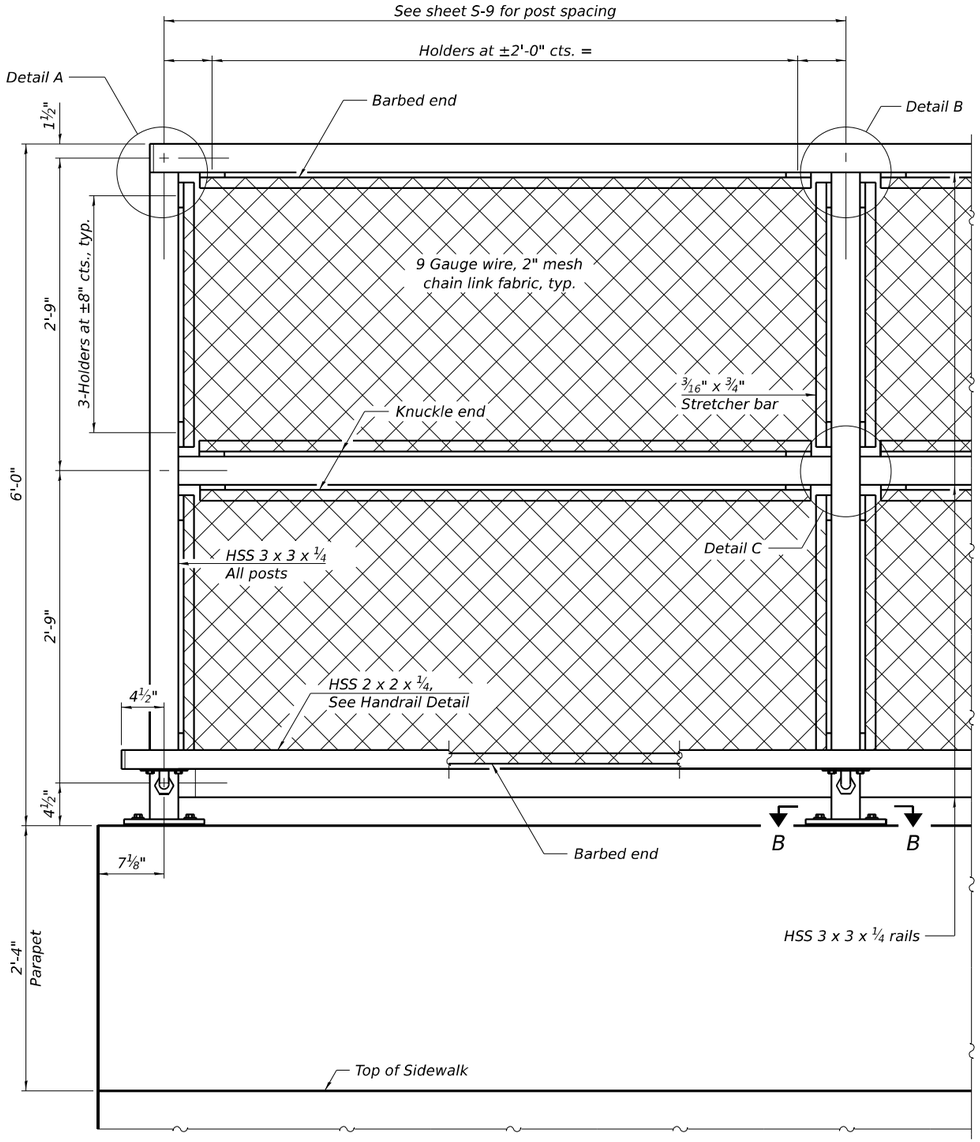

ELEVATION BRIDGE FENCE RAILING

(Inside face)

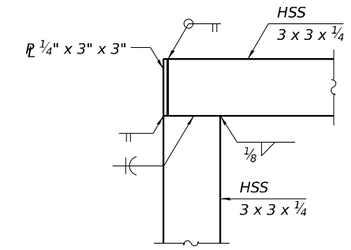

DETAIL A

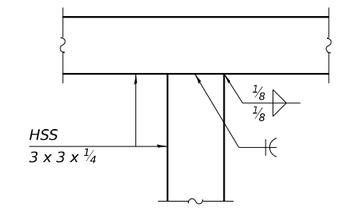

DETAIL B

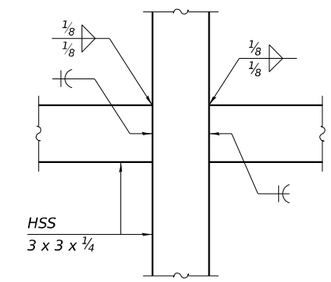

DETAIL C

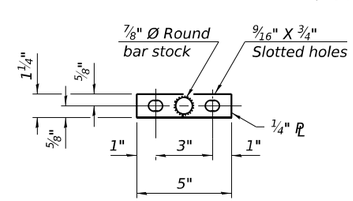

VIEW C-C

(Handrail)

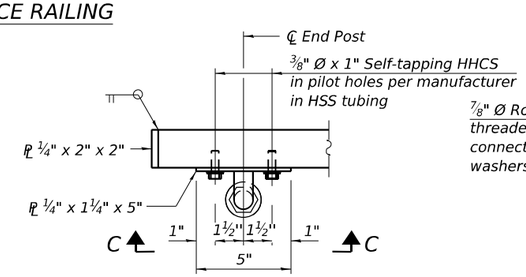

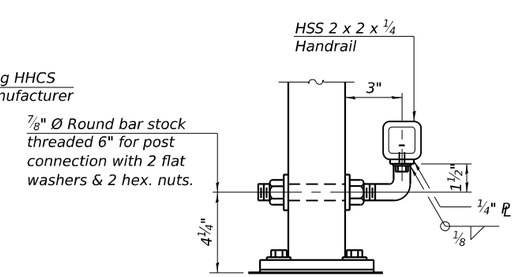

HANDRAIL DETAIL

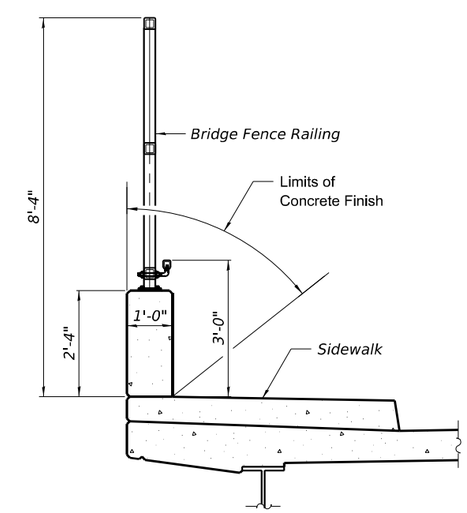

SECTION THRU DECK

RAILING CRITERIA

NCHRP 350 Test Level	4
Max Post Spacing	10'-0''
Railing Weight (plf)	50

(Sheet 1 of 2)

Michael Baker INTERNATIONAL

USER NAME = Connor.Liss	DESIGNED MLK	REVISED -	
	CHECKED JMK	REVISED -	
PLOT SCALE =	DRAWN JHJ	REVISED -	
PLOT DATE = 9/16/2024	CHECKED MLK/JMK	REVISED -	

STATE OF ILLINOIS
DEPARTMENT OF TRANSPORTATION

BRIDGE FENCE RAILING
STRUCTURE NO. 022-0163

SHEET S-10 OF S-44 SHEETS

F.A.P. RTE.	SECTION	COUNTY	TOTAL SHEETS	SHEET NO.
0347	0347 22 BJ3	DUPAGE	98	54
		CONTRACT NO. 62T17		
	ILLINOIS	FED. AID PROJECT		

MODEL: Default
FILE NAME: pw://mb-us-pw.bentley.com:mb-us-pw-03/Documents/Chicago_IL/01_Projects/D1_IDOT_Var_DEserve_PTB208_005/W01 - 198294/3.0 Deliverables/3.3 CADD Data\Sheets\0220163-62T17-010-FenceRepairs2.dgn

9/16/2024 2:43:15 PM

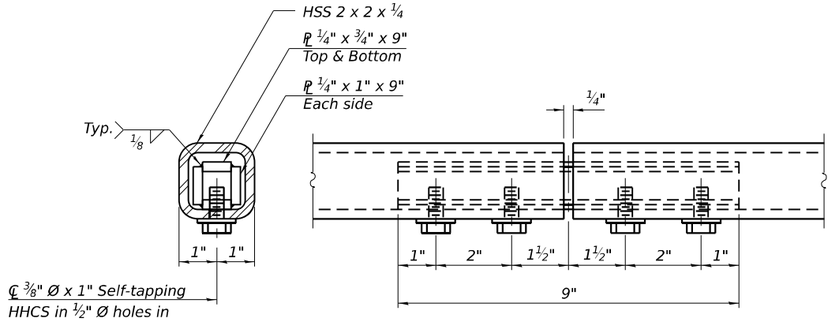

AT HANDRAIL

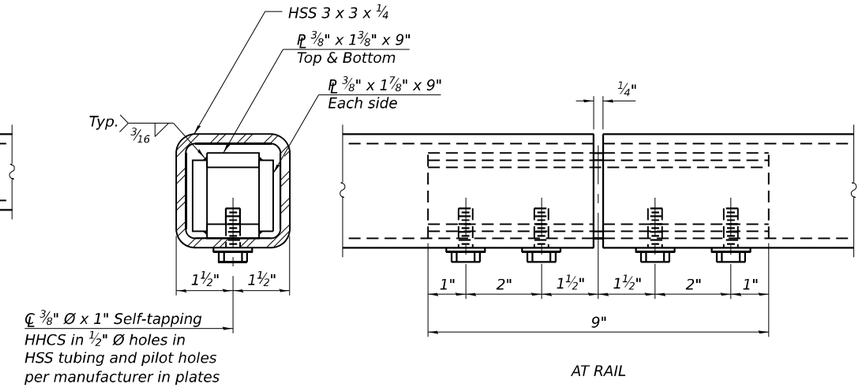

AT RAIL

MATERIAL SPLICE

Notes:

Place reinforcement bars to miss anchor rod locations.

CVN testing is not required for the HSS tubing used in the Bridge Fence Railing.

All HSS tubing used for the Handrail shall be CVN tested according to Article 1006.34(b) of the Standard Specifications.

All heavy hex nuts shall be according to ASTM A 563 grade DH.

All fully threaded anchor rods shall be ASTM F1554 grade 105.

The post base plate shall be fastened to the curb snug tight and given an additional ⅛" turn.

Rail splice inserts may be built out of bent plates of the same thicknesses and outside geometry limits as the 4 plate rail splice inserts shown.

All steel rail elements shall be galvanized according to Article 509.05 of the Standard Specifications. All of these elements, except the chain link fabric and ties, shall be finished with Black Polyester Powder Coating over galvanized steel. See Special Provisions.

The galvanized chain link fabric and ties shall be vinyl coated black according to Section 509 and Article 1006.27(a)(1)d of the Standard Specifications.

See sheet S-19 of S-44 for dimensions of concrete openings at expansion joints.

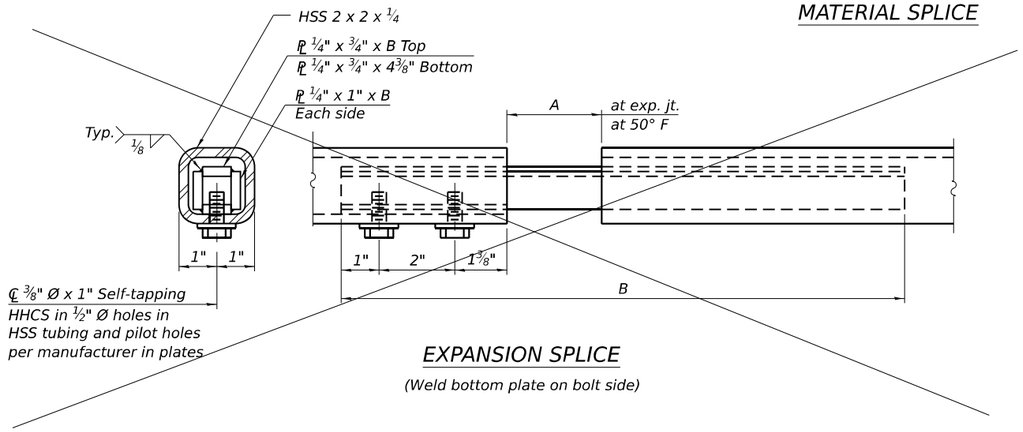

EXPANSION SPLICE

(Weld bottom plate on bolt side)

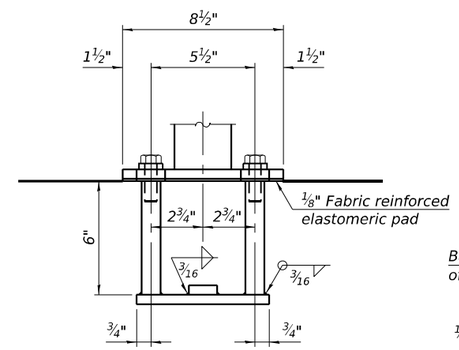

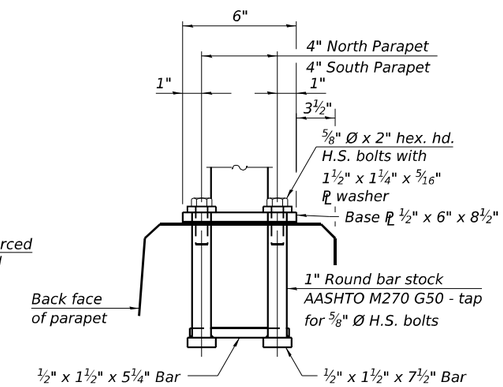

ANCHORAGE ASSEMBLY

In lieu of the cast-in-place anchor device shown, the Contractor has the option of drilling and setting ⅝" Ø fully threaded anchor rods with the same plate washers as specified above and heavy hex lock nuts according to Article 509.06 of the Standard Specifications. Embedment shall be according to the manufacturer's specifications.

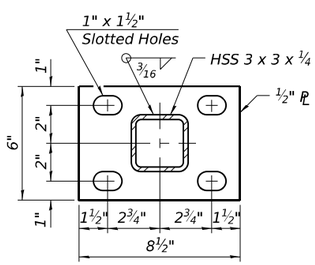

SECTION B-B

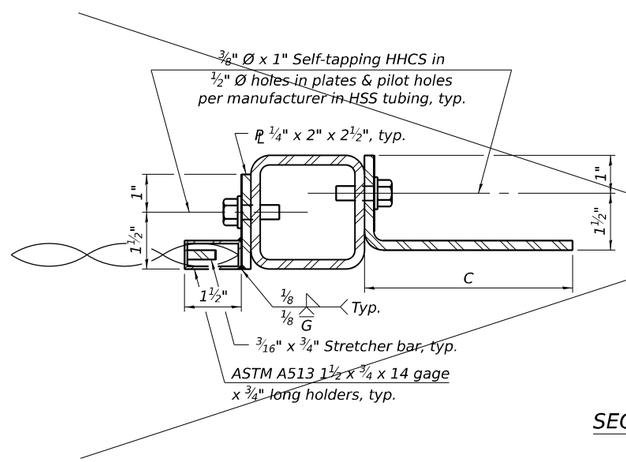

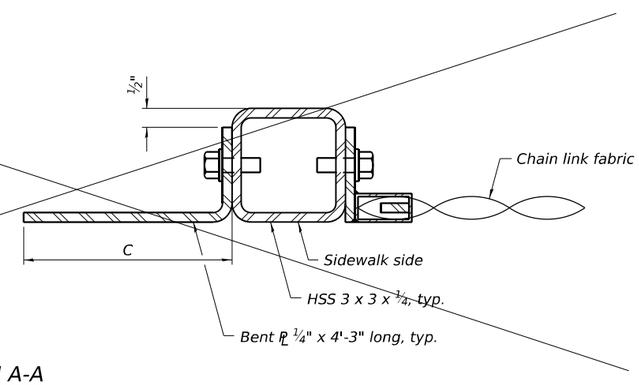

SECTION A-A

TABLE OF DIMENSIONS

Location	T	A	B	C	D
Over Strip Seal Jt.	≤4"	2½"	1'-5⅞"	7¼"	7⅛"

T= ; total movement based on total temperature range from -20°F to 120°F along centerline of roadway at expansion joint.

(Sheet 2 of 2)

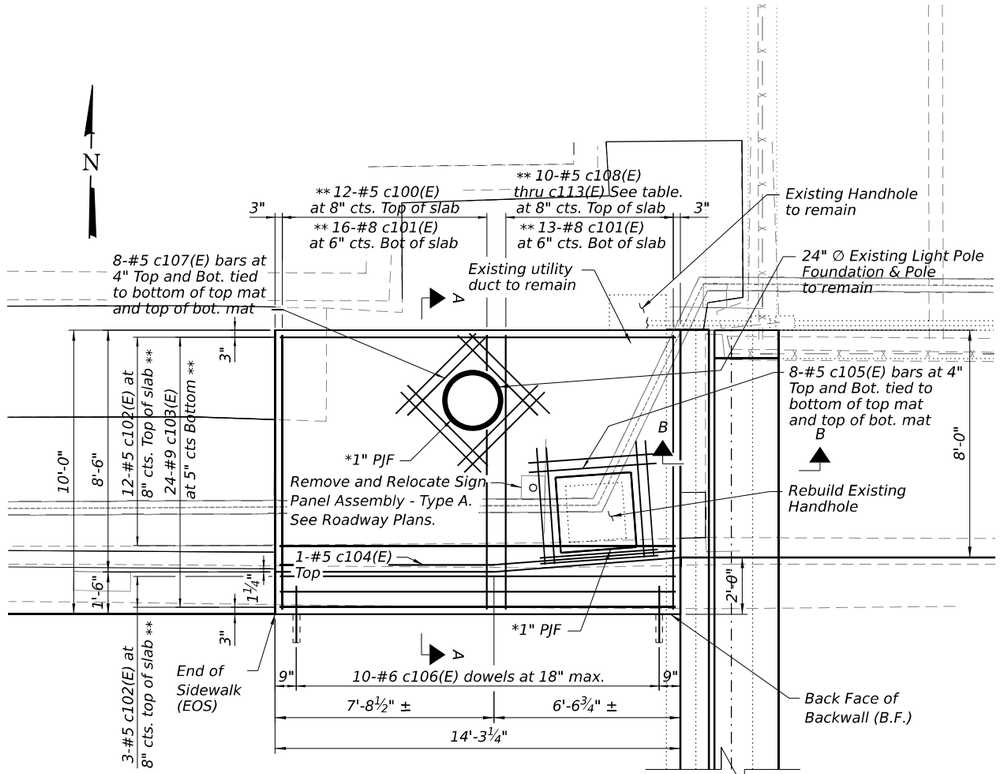

* Cost included with Concrete Superstructure (Approach Slab)

** Trim reinforcement as req'd. Provide 2" clear to existing utility and light pole openings

PLAN

(Utility opening dimensions to be field verified by Contractor)

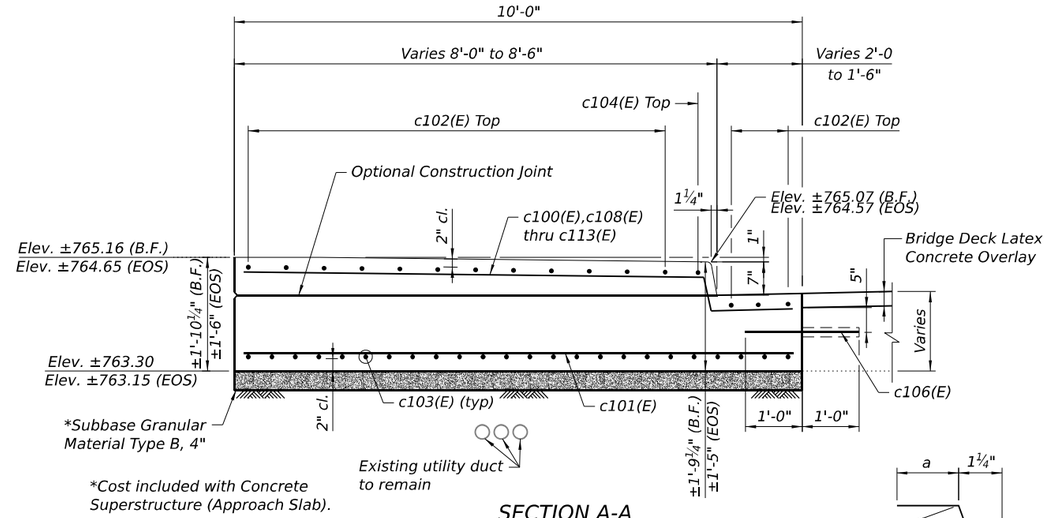

*Cost included with Concrete Superstructure (Approach Slab).

SECTION A-A

NOTES

1. Removal and disposal of existing expansion joint shall be included with the cost of concrete removal.
2. See existing plans for reinforcement bars not shown. Existing reinforcement bars extending into the removal areas that are not shown shall remain.
3. c106(E), c208(E), c308(E), and c404(E) bars shall be drilled and grouted in accordance with Article 584 of the Standard Specifications.
4. For Expansion Joint Details, including Concrete Removal, see Sheet S-17 of S-44.
5. Plan elevations and dimensions for sidewalk are relative to existing plans and subject to nominal construction variation. The Contractor shall field verify sidewalk elevations and field dimensions. Such variation shall not be cause for additional compensation for a change in scope of work, however, the Contractor will be paid for the quantity actually furnished at the unit price bid for the work.

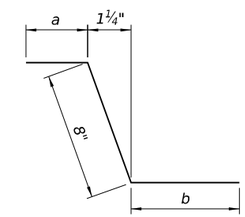

BAR c100(E) and c108(E) thru c113(E)

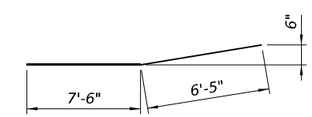

BAR c104(E)

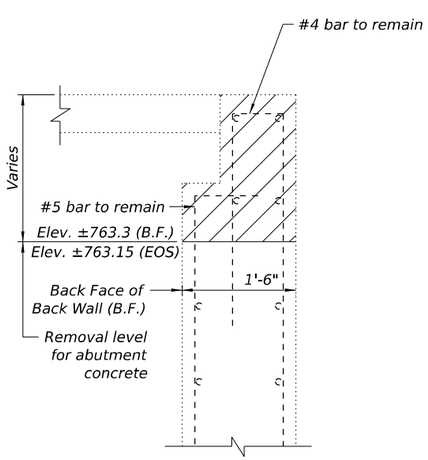

SECTION B-B

(Showing Abutment Removal)

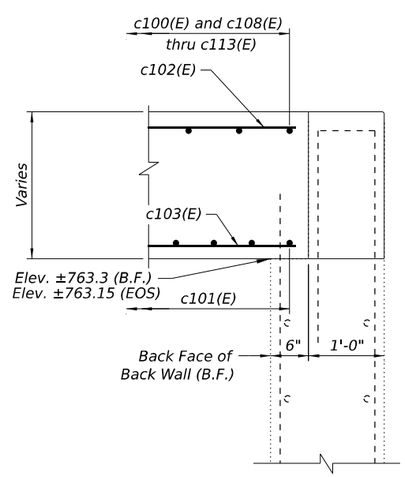

SECTION B-B

(Showing Reconstruction)
(Sidewalk sliding plate not shown for clarity)

Bar	a	b
c100(E)	8'-2"	1'-6"
c108(E)	8'-1"	1'-7"
c109(E)	8'-0"	1'-8"
c110(E)	7'-11"	1'-9"
c111(E)	7'-10"	1'-10"
c112(E)	7'-9"	1'-11"
c113(E)	7'-8"	2'-0"

LEGEND

Concrete Removal

NORTHWEST SIDEWALK BILL OF MATERIAL

Bar	No.	Size	Length	Shape
c100(E)	12	#5	10'-4"	
c101(E)	29	#8	9'-8"	
c102(E)	15	#5	13'-11"	
c103(E)	24	#9	13'-11"	
c104(E)	1	#5	13'-11"	
c105(E)	16	#5	4'-6"	
c106(E)	10	#6	2'-0"	
c107(E)	16	#5	4'-0"	
c108(E)	1	#5	10'-4"	
c109(E)	2	#5	10'-4"	
c110(E)	2	#5	10'-4"	
c111(E)	1	#5	10'-4"	
c112(E)	2	#5	10'-4"	
c113(E)	2	#5	10'-4"	
Concrete Superstructure (Approach Slab)			Cu. Yd.	8.7
Reinforcement Bars, Epoxy Coated			Pound	2,530
Rebuild Existing Handhole			Each	1

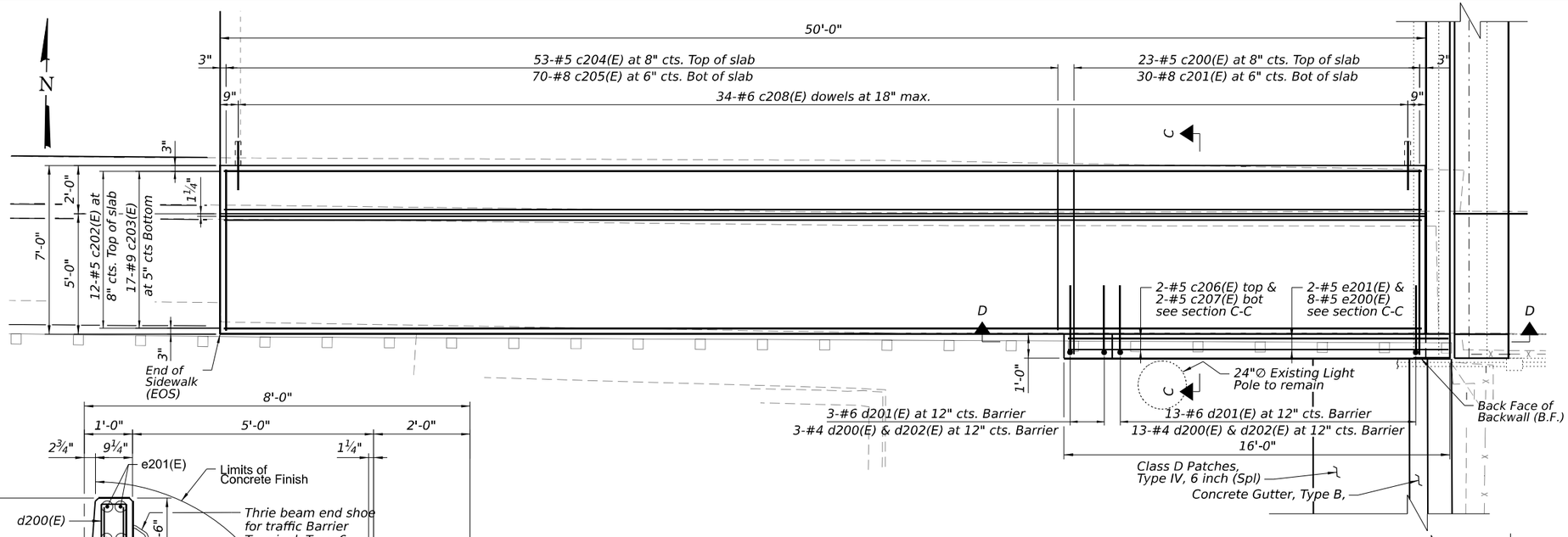

NOTES

1. See notes on sheet S-12 of S-44.

LEGEND

Concrete Removal

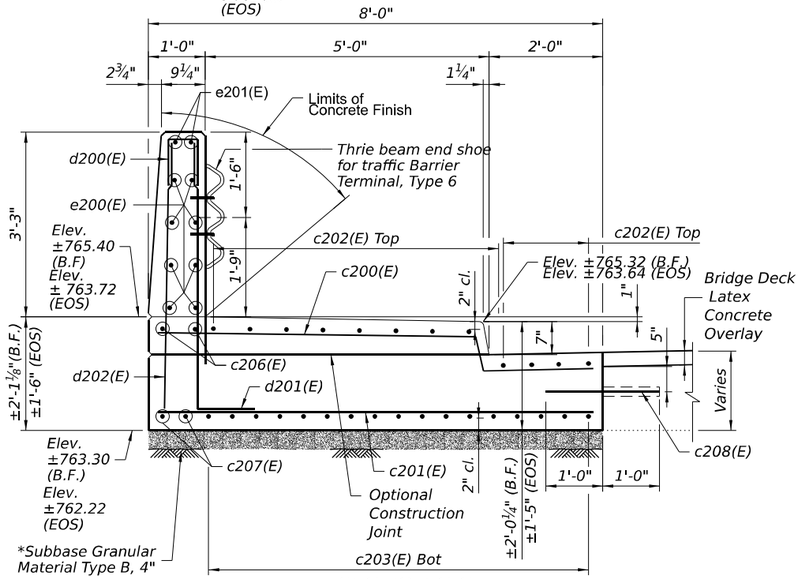

SECTION C-C

* Cost included with Concrete Superstructure (Approach Slab).

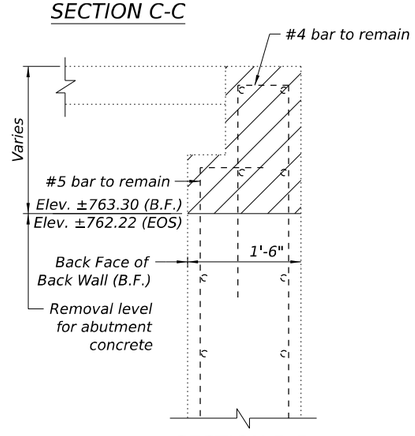

SECTION D-D

(Showing Abutment Removal)

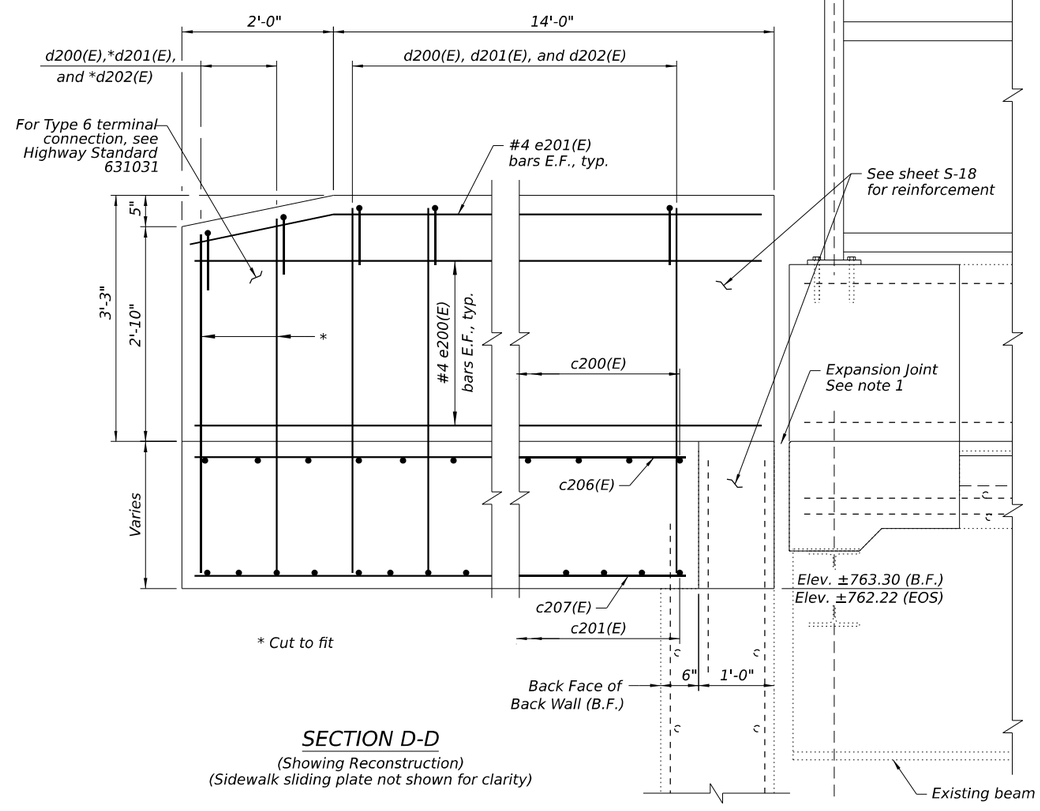

* Cut to fit

SECTION D-D

(Showing Reconstruction)
(Sidewalk sliding plate not shown for clarity)

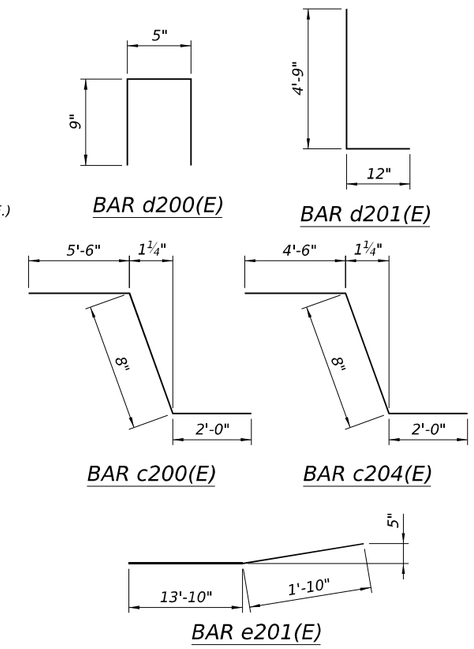

SOUTHWEST SIDEWALK BILL OF MATERIAL

Bar	No.	Size	Length	Shape
c200(E)	23	#5	8'-2"	
c201(E)	30	#8	7'-8"	
c202(E)	12	#5	49'-8"	
c203(E)	17	#9	49'-8"	
c204(E)	53	#5	7'-2"	
c205(E)	70	#8	6'-8"	
c206(E)	2	#5	14'-8"	
c207(E)	2	#9	14'-8"	
c208(E)	34	#6	2'-0"	
d200(E)	16	#4	1'-11"	
d201(E)	16	#6	5'-9"	
d202(E)	16	#4	4'-9"	
e200(E)	8	#5	15'-8"	
e201(E)	2	#5	15'-8"	
Concrete Superstructure (Approach Slab)			Cu. Yd.	27.9
Reinforcement Bars, Epoxy Coated			Pound	12,910

MODEL: Default
FILE NAME: pw://mb-us-pw.bentley.com:mb-us-pw-03/Documents/Chicago_IL/01_Projects/D1_IDOT_Var_DEserve_PTB208_005/W01 - 198294/3.0 Deliverables/3.3 CADD Data/Sheets/0220163-62T17-013-SidewalkDet2.dgn

Michael Baker INTERNATIONAL

USER NAME = $USER$	DESIGNED MLK	REVISED -
	CHECKED JMK	REVISED -
PLOT SCALE =	DRAWN JHJ	REVISED -
PLOT DATE = 9/20/2024	CHECKED MLK/JMK	REVISED -

STATE OF ILLINOIS
DEPARTMENT OF TRANSPORTATION

SOUTHWEST SIDEWALK DETAILS
STRUCTURE NO. 022-0163

SHEET S-13 OF S-44 SHEETS

F.A.P. RTE.	SECTION	COUNTY	TOTAL SHEETS	SHEET NO.
0347	0347 22 BJ3	DUPAGE	98	57
		CONTRACT NO. 62T17		
	ILLINOIS	FED. AID PROJECT		

9/20/2024 3:45:51 PM

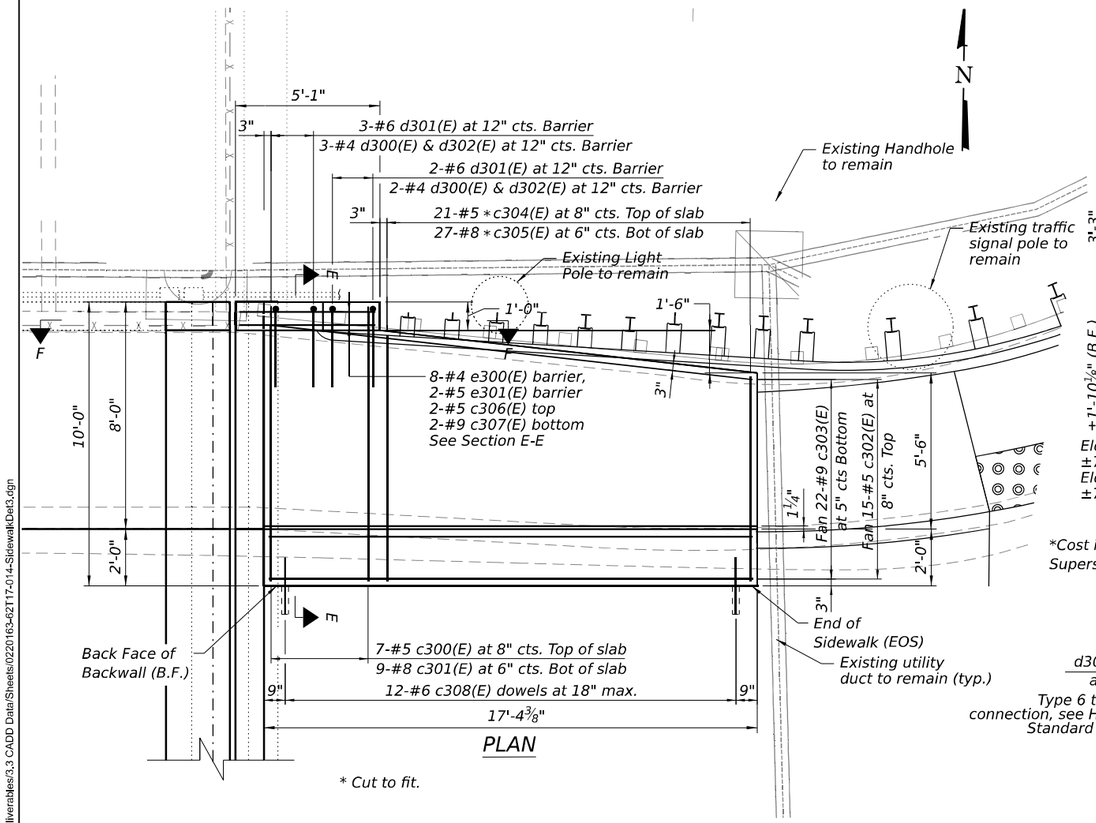

PLAN

* Cut to fit.

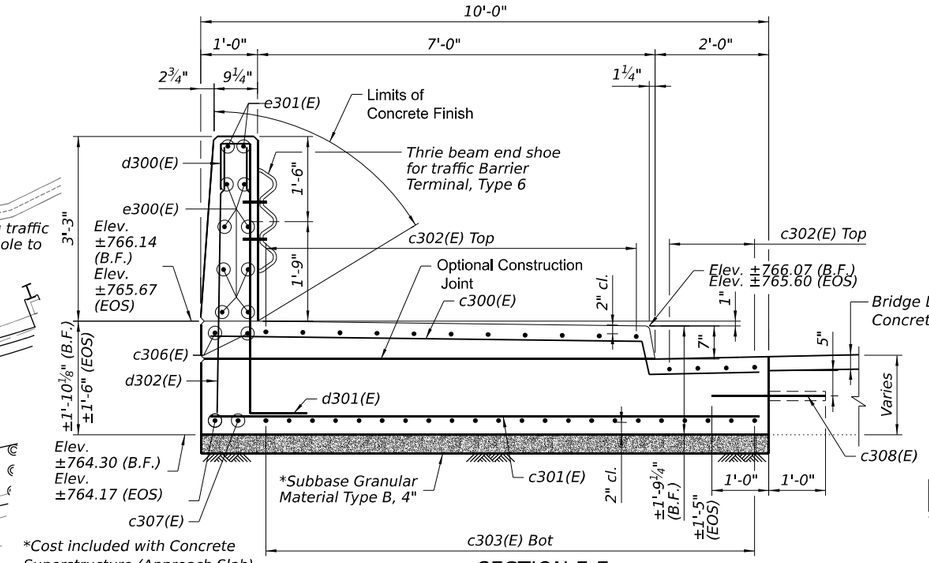

*Cost included with Concrete Superstructure (Approach Slab).

SECTION E-E

NOTES

1. See notes on sheet S-12 of S-44.

LEGEND

Concrete Removal

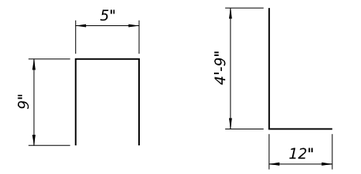

BAR d300(E) BAR d301(E)

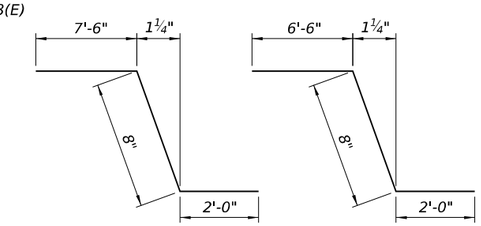

BAR c300(E) BAR c304(E)

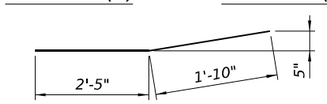

BAR e301(E)

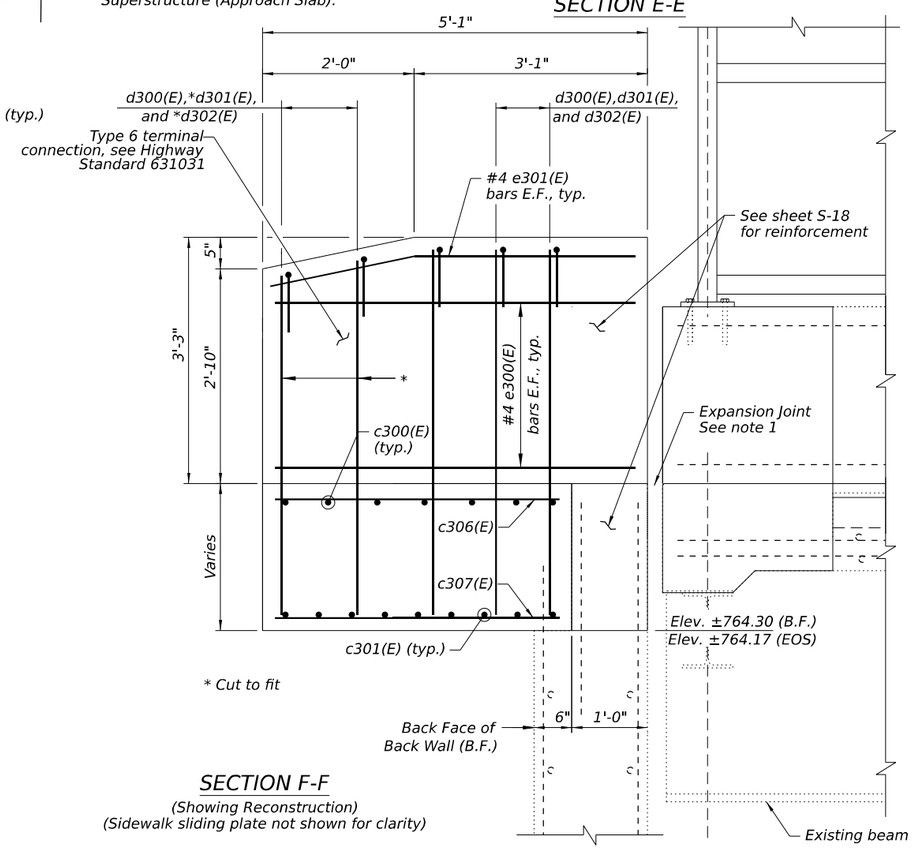

* Cut to fit

SECTION F-F

(Showing Reconstruction)
(Sidewalk sliding plate not shown for clarity)

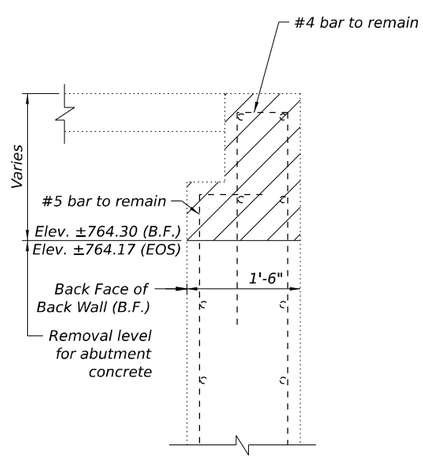

SECTION F-F

(Showing Abutment Removal)

NORTHEAST SIDEWALK BILL OF MATERIAL

Bar	No.	Size	Length	Shape
c300(E)	7	#5	10'-2"	
c301(E)	9	#8	9'-8"	
c302(E)	15	#5	17'-0"	
c303(E)	22	#9	17'-0"	
c304(E)	21	#5	9'-2"	
c305(E)	27	#8	8'-8"	
c306(E)	2	#5	3'-9"	
c307(E)	2	#9	3'-9"	
c308(E)	12	#6	2'-0"	
d300(E)	5	#4	1'-11"	
d301(E)	5	#6	5'-9"	
d302(E)	5	#4	4'-9"	
e300(E)	8	#5	4'-9"	
e301(E)	2	#5	4'-9"	
Concrete Superstructure			Cu. Yd.	10.6
Reinforcement Bars, Epoxy Coated			Pound	5,660

MODEL: Default
FILE NAME: pw://mb-us-pw.bentley.com:mb-us-pw-03/Documents/Chicago_IL/01_Projects/D1_IDOT_Var_DEservs_PTB208_005/W01 - 198294/3.0 Deliverables/3.3 CADD Data/Sheets/022016 3-62T17-014-SidewalkDet3.dgn

9/16/2024 2:43:49 PM

Michael Baker INTERNATIONAL

USER NAME = Connor.Liss	DESIGNED MLK	REVISED -	
	CHECKED JMK	REVISED -	
PLOT SCALE =	DRAWN JHJ	REVISED -	
PLOT DATE = 9/16/2024	CHECKED MLK/JMK	REVISED -	

STATE OF ILLINOIS
DEPARTMENT OF TRANSPORTATION

NORTHEAST SIDEWALK DETAILS
STRUCTURE NO. 022-0163

SHEET S-14 OF S-44 SHEETS

F.A.P. RTE.	SECTION	COUNTY	TOTAL SHEETS	SHEET NO.
0347	0347 22 BJ3	DUPAGE	98	58
		CONTRACT NO. 62T17		
	ILLINOIS	FED. AID PROJECT		

NOTES

1. See notes on sheet S-12 of S-44.

LEGEND

Concrete Removal

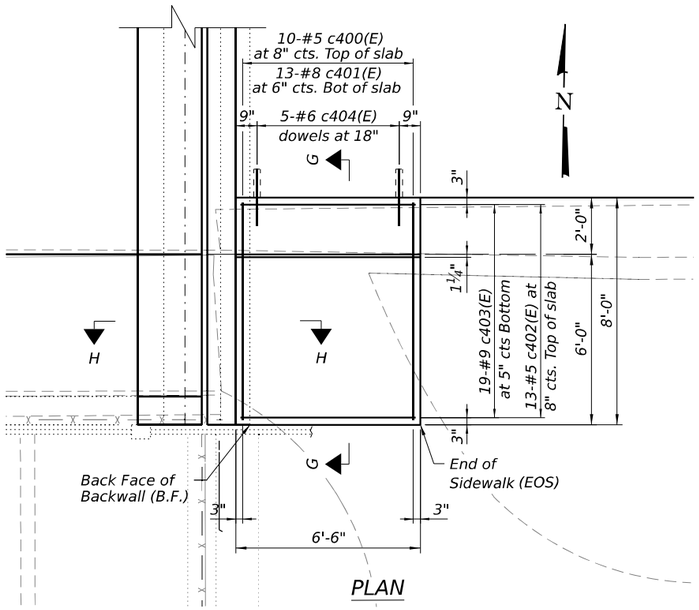

PLAN

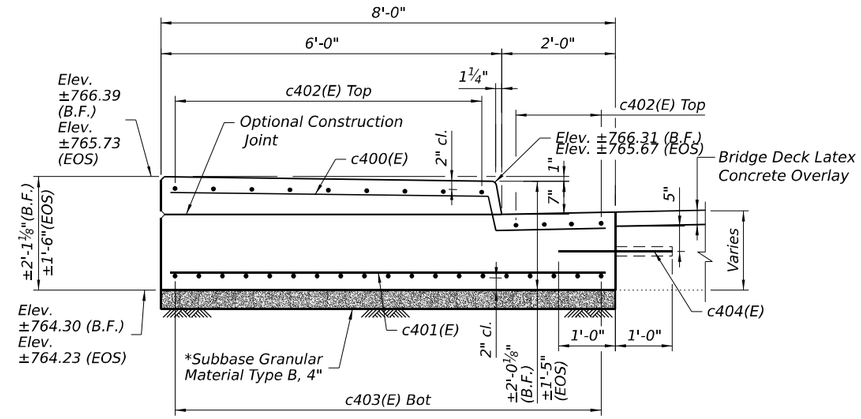

SECTION G-G

*Cost included with Concrete
Superstructure (Approach Slab).

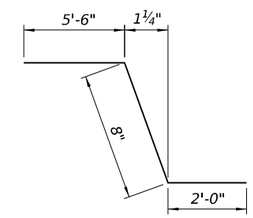

BAR c400(E)

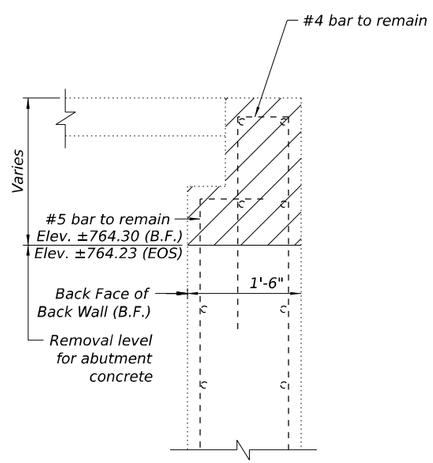

SECTION H-H
(Showing Abutment Removal)

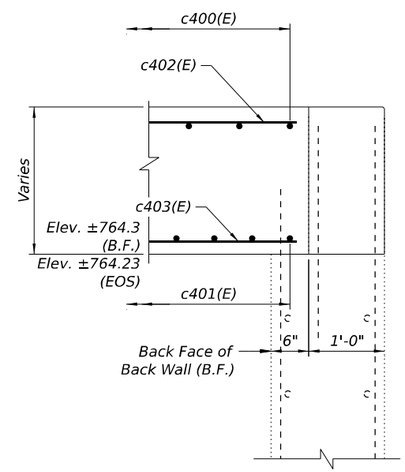

SECTION H-H
(Showing Reconstruction)
(Sidewalk sliding plate not shown for clarity)

SOUTHEAST SIDEWALK BILL OF MATERIAL

Bar	No.	Size	Length	Shape
c400(E)	10	#5	8'-2"	
c401(E)	13	#8	7'-8"	
c402(E)	13	#5	6'-2"	
c403(E)	19	#9	6'-2"	
c404(E)	5	#6	2'-0"	
Concrete Superstructure (Approach Slab)			Cu. Yd.	3.8
Reinforcement Bars, Epoxy Coated			Pound	850

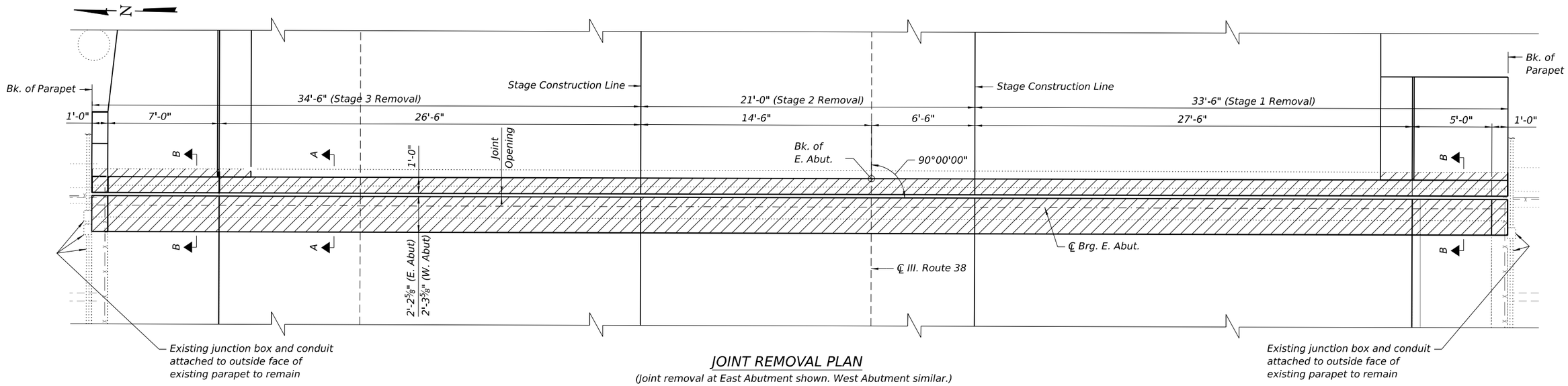

JOINT REMOVAL PLAN

(Joint removal at East Abutment shown. West Abutment similar.)

Note:
The Contractor is advised that a junction box and conduit are attached to the outside face of both parapets. The Contractor shall take proper precautions to protect the utility from damage during concrete removal and replacement, and remount the junction box and conduit according to the as-built condition. Cost included with Concrete Superstructure. Any damage to the utility caused by the Contractor shall be repaired at the Contractor's expense to the satisfactory of the utility owner.

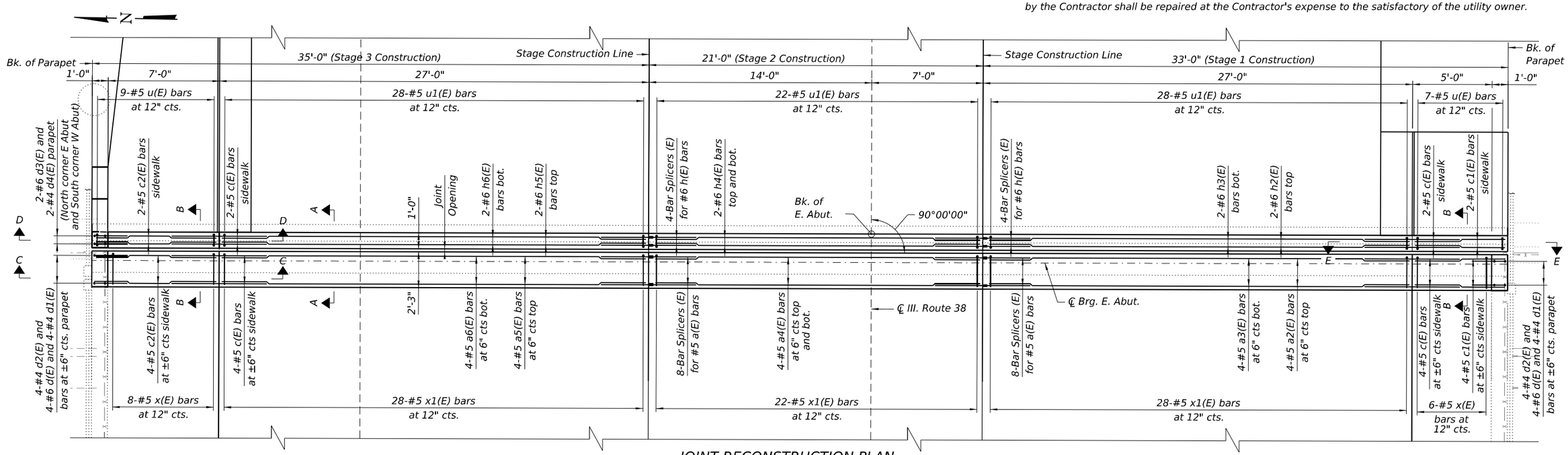

JOINT RECONSTRUCTION PLAN

(Joint reconstruction at East Abutment shown. West Abutment similar.)

Notes:
Joint openings shall be adjusted according to Article 520.04 of the Std. Specs. when the deck is poured at an ambient temperature other than 50° F.

MODEL: Default
FILE NAME: pw://mb-us-sw.bentley.com:mb-us-pw-03/Documents/Chicago_IL/01_Projects/D1_IDOT_Var_DEservis_PTB208_005/W01 - 198234/3.0 Deliverables/3.3 CADD Data/Sheets/0220163-62T17-016-JointReconstruction1.dgn
8/9/2024 3:17:00 PM

Michael Baker INTERNATIONAL

USER NAME = Connor.Liss	DESIGNED	MLK	REVISED	-	
	CHECKED	JMK	REVISED	-	
PLOT SCALE =	DRAWN	JHJ	REVISED	-	
PLOT DATE = 8/9/2024	CHECKED	MLK/JMK	REVISED	-	

STATE OF ILLINOIS
DEPARTMENT OF TRANSPORTATION

JOINT RECONSTRUCTION DETAILS
STRUCTURE NO. 022-0163

SHEET S-16 OF S-44 SHEETS

F.A.P. RTE.	SECTION	COUNTY	TOTAL SHEETS	SHEET NO.
0347	0347 22 BJ3	DUPAGE	98	60
		CONTRACT NO. 62T17		
		ILLINOIS	FED. AID PROJECT	

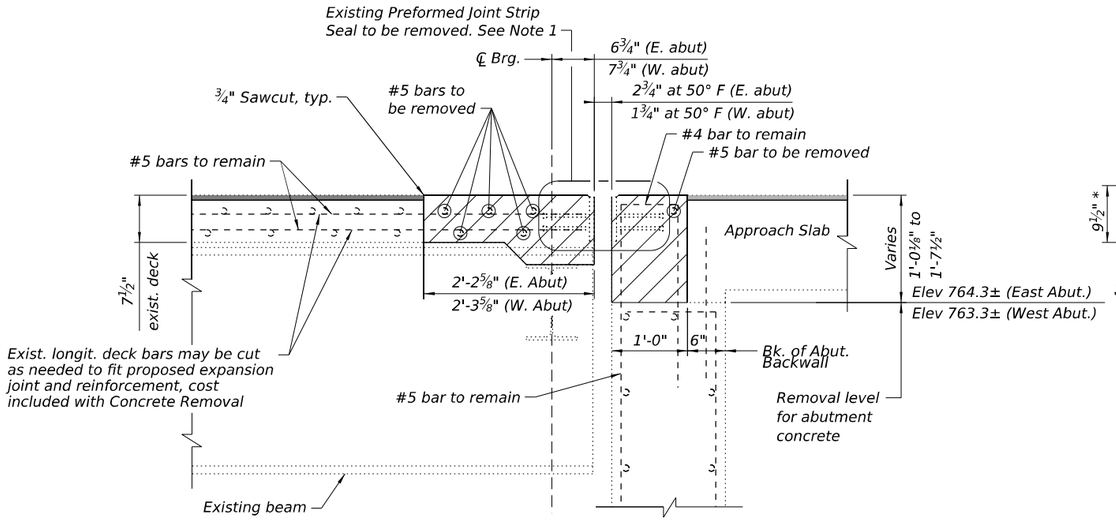

SECTION A-A
(Showing Removal)

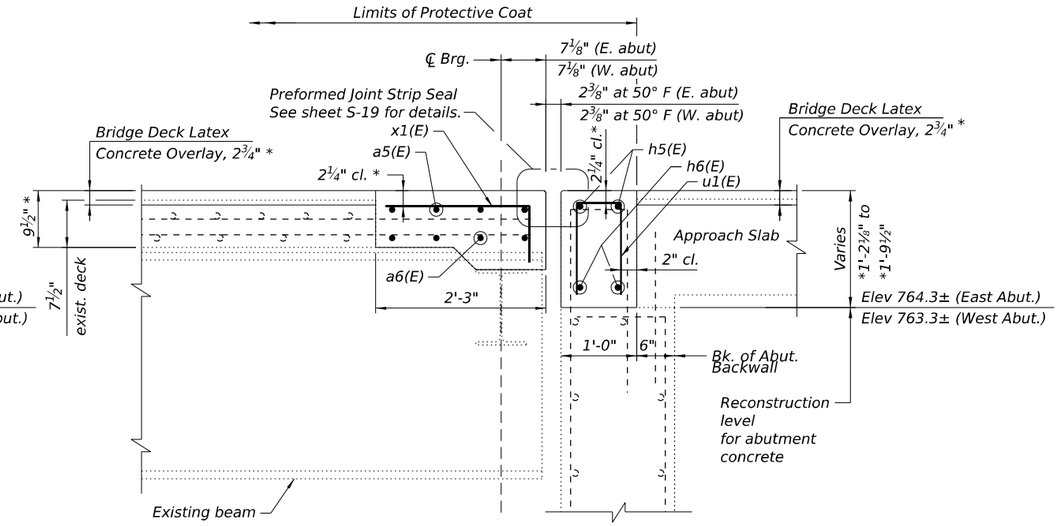

SECTION A-A
(Showing Reconstruction)
* Prior to grinding

LEGEND

Concrete Removal
(See note 2)

Bridge Deck Scarification ¾"

NOTES

1. Removal and disposal of existing expansion joint shall be included with the cost of concrete removal.
2. See existing plans for reinforcement bars not shown. Existing reinforcement bars extending into the removal areas that are not shown shall remain.

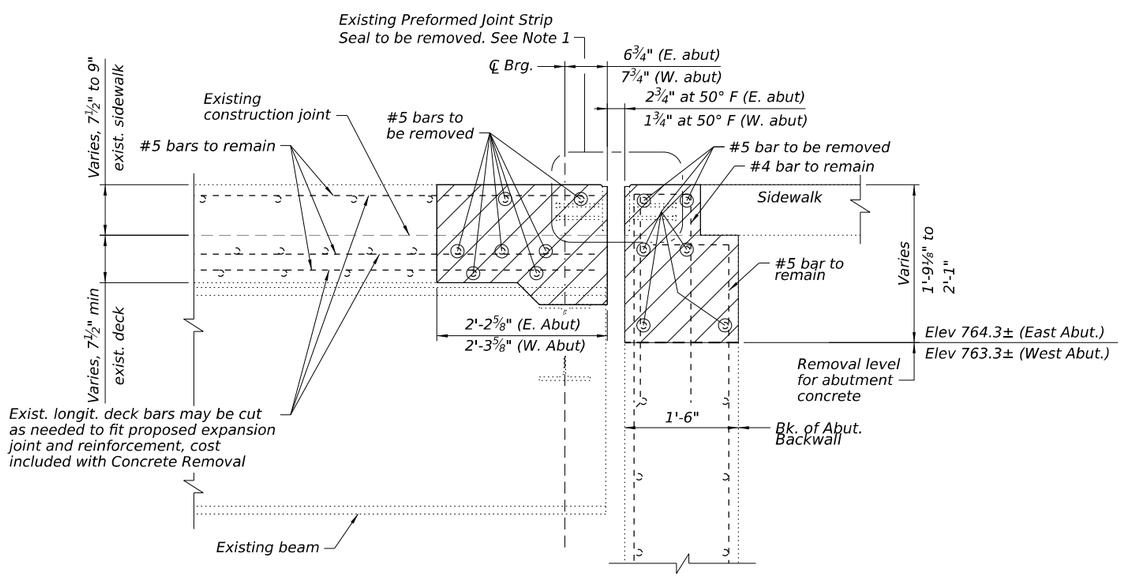

SECTION B-B
(Showing Removal)

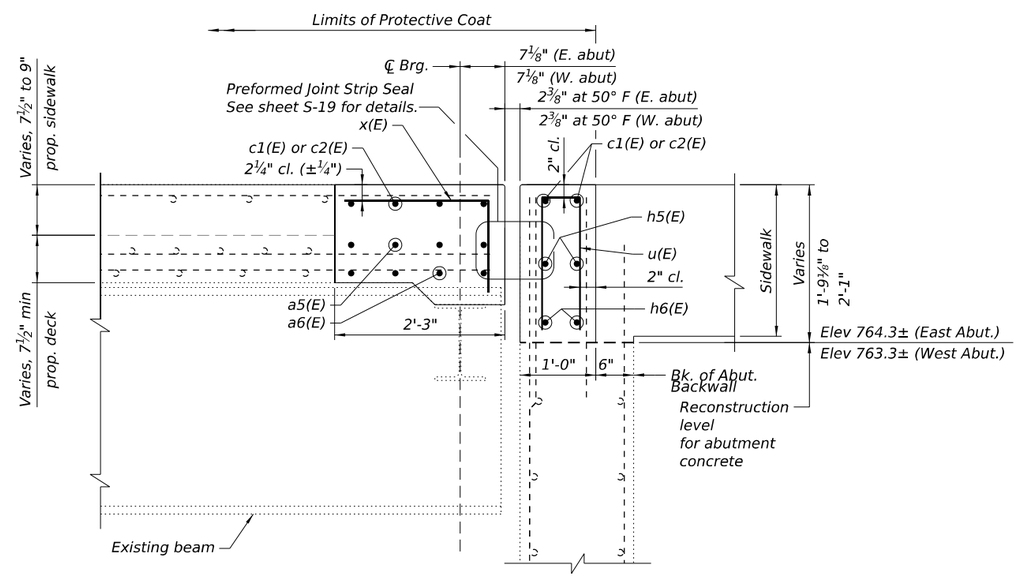

SECTION B-B
(Showing Reconstruction)

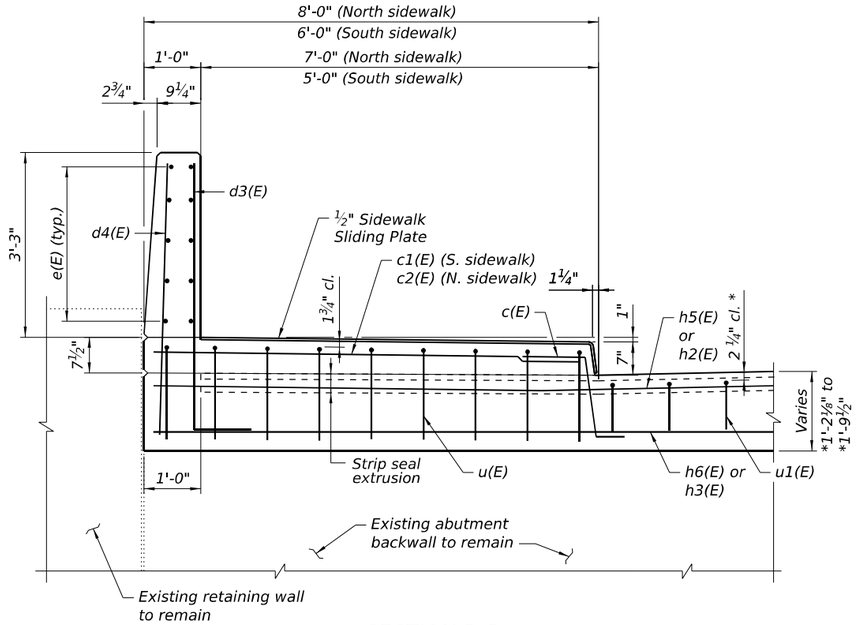

SECTION D-D

(Northeast Parapet shown, Southwest Parapet similar)
* Prior to grinding

NOTES

1. See notes on sheet S-17.

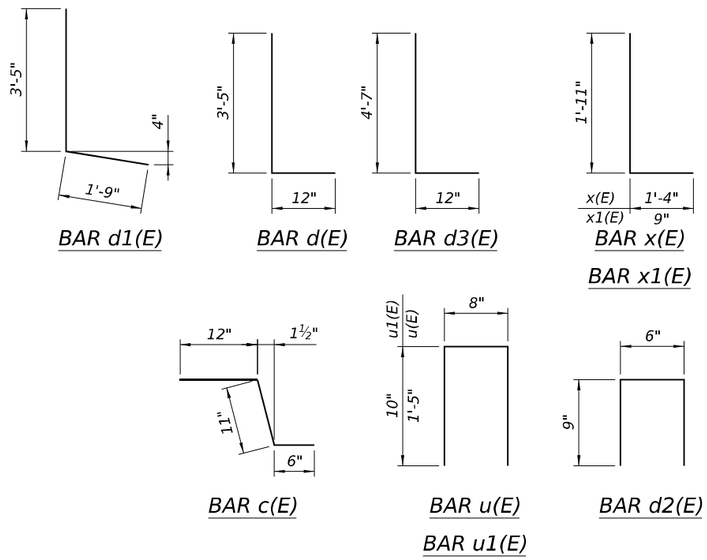

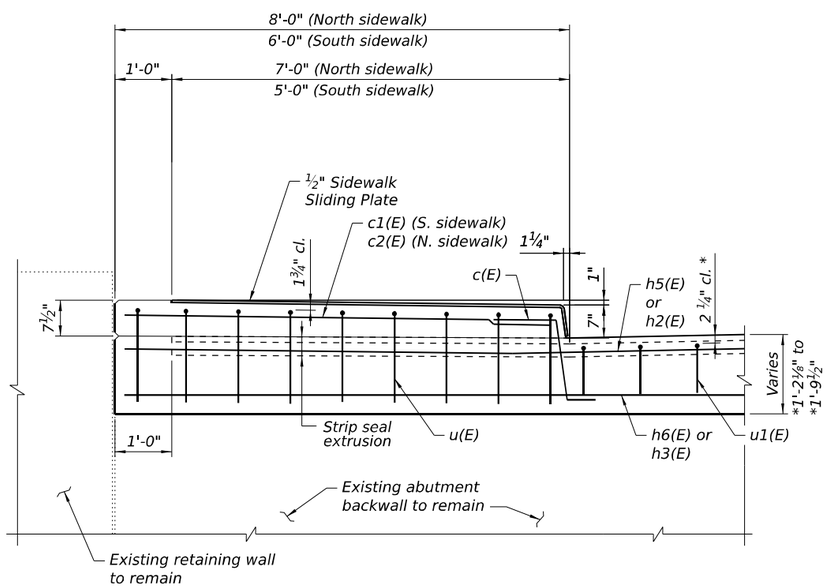

SECTION E-E

(Northwest closure shown, Southeast closure similar)
* Prior to grinding

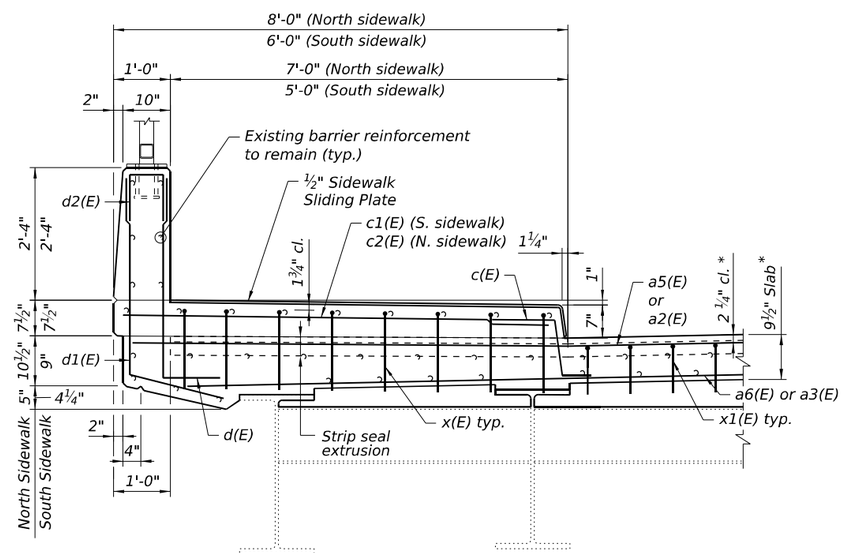

SECTION C-C

* Prior to grinding

TWO JOINT RECONSTRUCTIONS BILL OF MATERIAL

Bar	No.	Size	Length	Shape
a2(E)	8	#5	32'-4"	
a3(E)	8	#5	31'-6"	
a4(E)	16	#5	20'-9"	
a5(E)	8	#5	34'-4"	
a6(E)	8	#5	33'-6"	
c(E)	24	#5	2'-5"	
c1(E)	12	#5	5'-7"	
c2(E)	12	#5	7'-7"	
d(E)	16	#6	4'-5"	
d1(E)	16	#4	5'-2"	
d2(E)	16	#4	2'-0"	
d3(E)	4	#6	5'-7"	
d4(E)	4	#4	5'-5"	
h2(E)	4	#6	32'-8"	
h3(E)	4	#6	32'-8"	
h4(E)	8	#6	20'-9"	
h5(E)	4	#6	34'-6"	
h6(E)	4	#6	34'-6"	
u(E)	32	#5	3'-6"	
u1(E)	156	#5	2'-4"	
x(E)	28	#5	3'-3"	
x1(E)	156	#5	2'-8"	
Concrete Removal			Cu. Yd.	27.8
Concrete Superstructure			Cu. Yd.	27.7
Reinforcement Bars, Epoxy Coated			Pound	3,990

MODEL: Default
FILE NAME: pw://mb-us-pw.bentley.com:mb-us-pw-03/Documents/Chicago_IL/01_Projects/D1_IDOT_Var_OEservs_PTB208_005/W01 - 198294/3.0 Deliverables/3.3 CADD Data/Sheets/0220163-62T17-018-JointReconstruction3.dgn

8/9/2024 3:17:27 PM

Michael Baker INTERNATIONAL

USER NAME = Connor.Liss	DESIGNED MLK	REVISED -	
	CHECKED JMK	REVISED -	
PLOT SCALE =	DRAWN JHJ	REVISED -	
PLOT DATE = 8/9/2024	CHECKED MLK/JMK	REVISED -	

STATE OF ILLINOIS
DEPARTMENT OF TRANSPORTATION

JOINT RECONSTRUCTION DETAILS
STRUCTURE NO. 022-0163

SHEET S-18 OF S-44 SHEETS

F.A.P. RTE.	SECTION	COUNTY	TOTAL SHEETS	SHEET NO.
0347	0347 22 BJ3	DUPAGE	98	62
		CONTRACT NO. 62T17		
	ILLINOIS	FED. AID PROJECT		

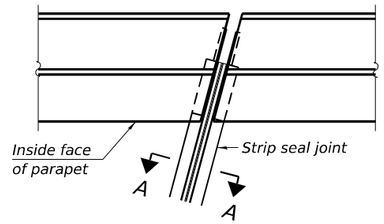

FOR SKEWS ≤ 30°

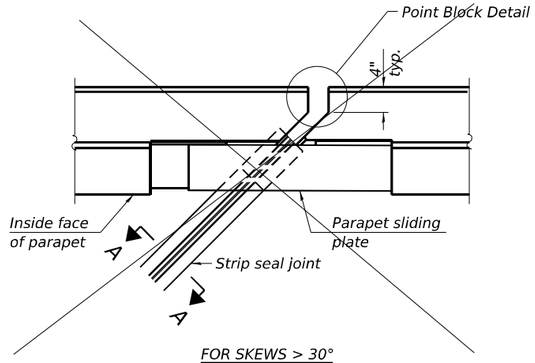

FOR SKEWS > 30°

PLAN AT PARAPET

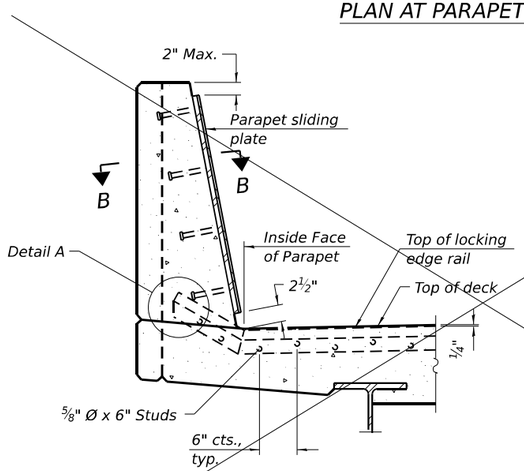

SECTION AT PARAPET

(Skews > 30° shown. Skews ≤ 30° similar except as shown in plan view.)

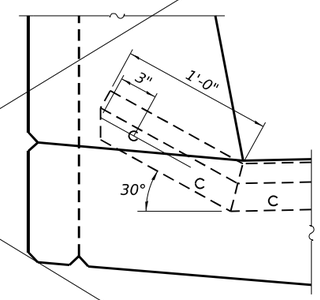

DETAIL A

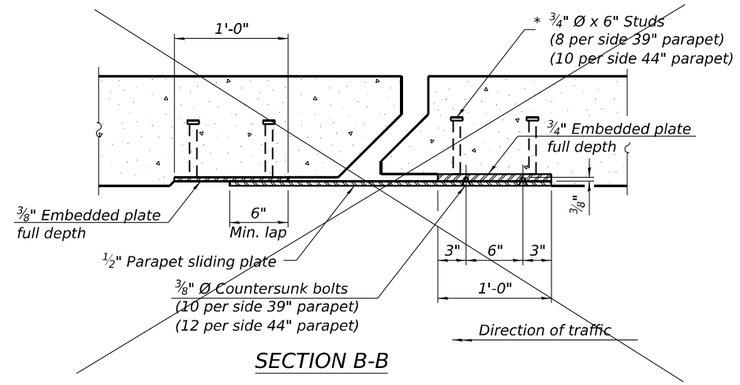

SECTION B-B

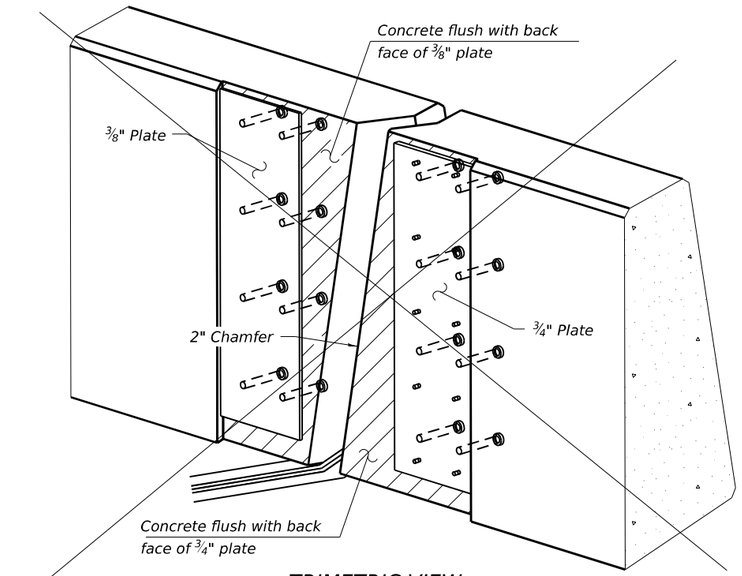

TRIMETRIC VIEW

(Showing embedded plates only)

Notes:

The strip seal shall be made continuous and shall have a minimum thickness of ¼". The configuration of the strip seal shall match the configuration of the locking edge rails. Open or "webbed" strip seal gland configurations are not permitted. The gland shall be sized for a maximum rated movement of 4 inches.

The locking edge rails depicted are configured for typical applications and are conceptual only. The actual configuration of the locking edge rails and matching strip seal may vary from manufacturer to manufacturer provided they fit the application and meet the minimum anchorage shown. Flanged edge rails, however, will not be allowed. Locking edge rails may exceed the 4½" maximum depth provided the anchorage system is revised according to the manufacturer's recommendation.

The manufacturer's recommended installation methods shall be followed.

All steel components shall be galvanized after fabrication according to Article 520.03 of the Standard Specifications.

The Maximum space between locking edge rail segments shall be 3/16" and sealed with a suitable sealant; however, any rail joint within 10' measured perpendicular to the face of the curb or parapet shall be welded as shown in the locking edge rail splice detail.

The top surface of sidewalk sliding plates shall have a raised pattern according to ASTM A786.

Cost of parapet sliding plates, sidewalk sliding plates, embedded plates, anchorage studs, and expansion anchors included with Preformed Joint Strip Seal.

39" constant slope barrier shown, 44" constant slope barrier similar as noted.

The concrete opening below the strip seal will vary based on the locking edge rail chosen by the Contractor. Deck and parapet lengths shown elsewhere in the plans are dimensioned to the concrete opening, not the joint opening, and are based on the rolled locking edge rail. If the Contractor elects to use a different locking edge rail, dimensional adjustments may be required. One exception to this would be the strip seal joint at the end of the precast bridge approach slab. For these cases the pavement connector length shall be adjusted, not the length of the bridge approach slab.

*** Prior to Grinding

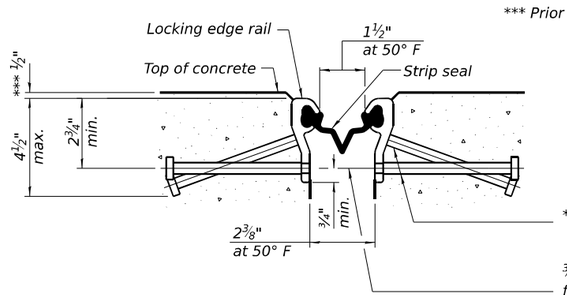

SHOWING ROLLED RAIL JOINT

* ⅝" Ø x 6" studs @ 6" cts. (alternate angled/bent studs with horizontal studs)

⅜" Ø threaded rods in 7/16" Ø holes at ±4'-0" cts. for holding the proper joint opening based on the temperature during the deck pour. Place to miss studs. All rods shall be burned, or sawed off flush with the plates after concrete is set.

SECTION A-A

* Granular or solid flux filled headed studs conforming to Article 1006.32 of the Std. Specs., automatically end welded.

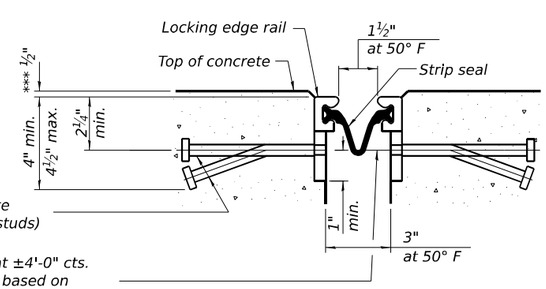

SHOWING WELDED RAIL JOINT

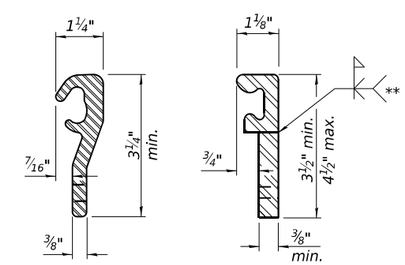

ROLLED (EXTRUDED) RAIL

WELDED RAIL

LOCKING EDGE RAILS

** Back gouge not required if complete joint penetration is verified by mock-up.

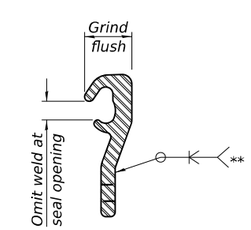

LOCKING EDGE RAIL SPLICE

The inside of the locking edge rail groove shall be free of weld residue. Rolled rail shown, welded rail similar.

BILL OF MATERIAL

Item	Unit	Total
Preformed Joint Strip Seal	Foot	178

MODE: Default
FILE NAME: pw://mb-us-pw.bentley.com:mb-us-pw-03/Documents/Chicago_IL101_Projects/D1_IDOT_Var_DEservs_PTB208_005/W01 - 198294/3.0 Deliverables/3.3 CADD Data/Sheets/0220163-62T17-019-PreformedJnt.dgn

8/9/2024 3:17:38 PM

Michael Baker INTERNATIONAL

USER NAME = Connor.Liss	DESIGNED MLK	REVISED -	
	CHECKED JMK	REVISED -	
PLOT SCALE =	DRAWN JHJ	REVISED -	
PLOT DATE = 8/9/2024	CHECKED MLK/JMK	REVISED -	

STATE OF ILLINOIS
DEPARTMENT OF TRANSPORTATION

PREFORMED JOINT STRIP SEAL
STRUCTURE NO. 022-0163

SHEET S-19 OF S-44 SHEETS

F.A.P. RTE.	SECTION	COUNTY	TOTAL SHEETS	SHEET NO.
0347	0347 22 BJ3	DUPAGE	98	63
		CONTRACT NO. 62T17		
	ILLINOIS	FED. AID PROJECT		

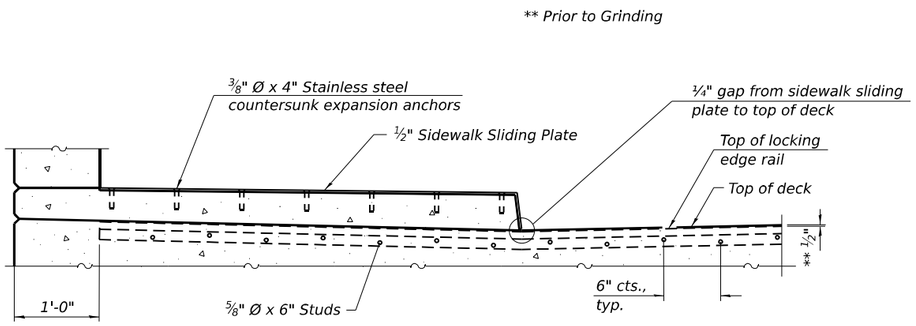

SECTION AT RAISED SIDEWALK

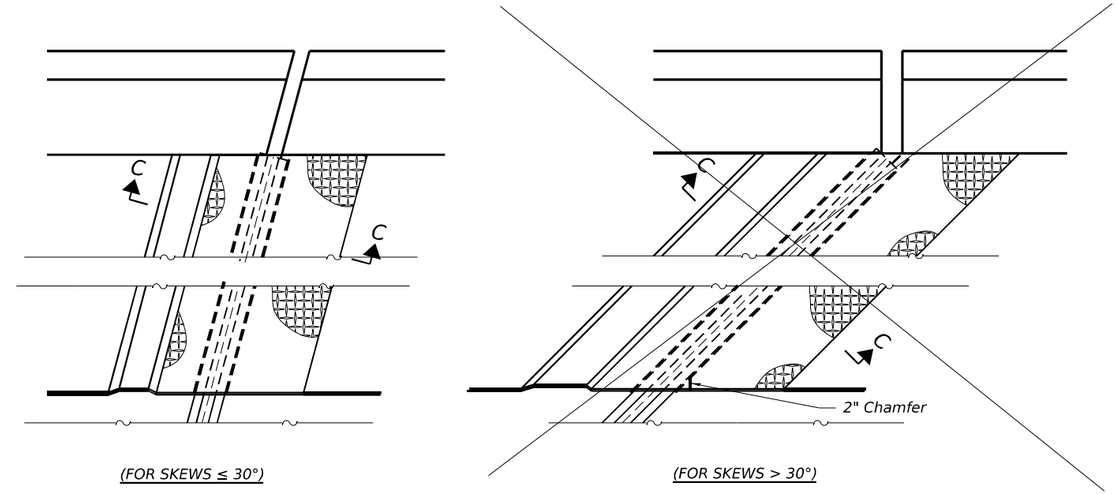

PLAN AT RAISED SIDEWALK

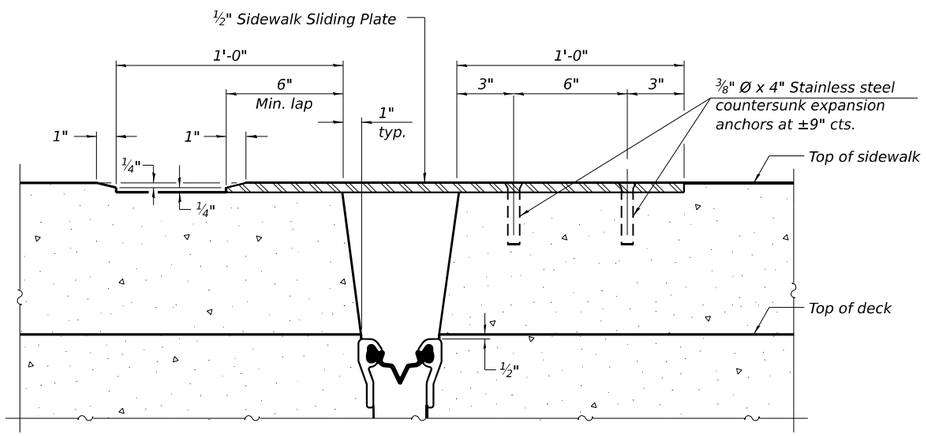

SECTION C-C

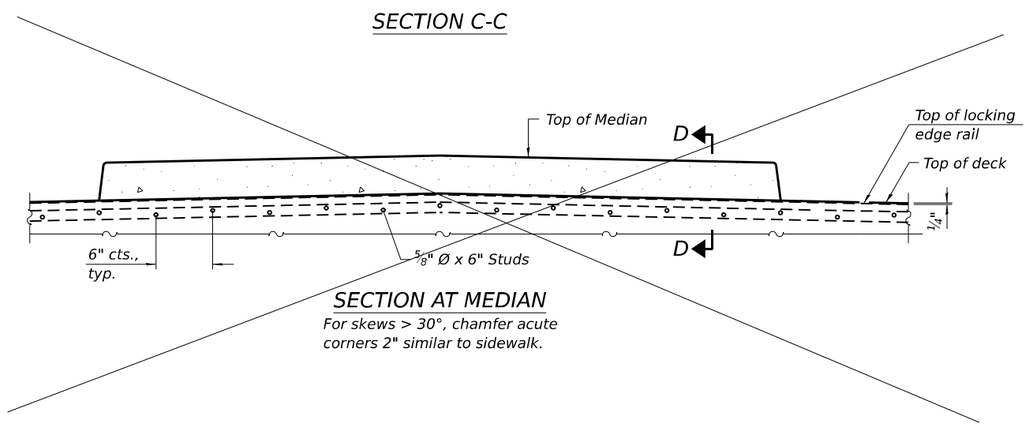

SECTION AT MEDIAN

For skews > 30°, chamfer acute corners 2" similar to sidewalk.

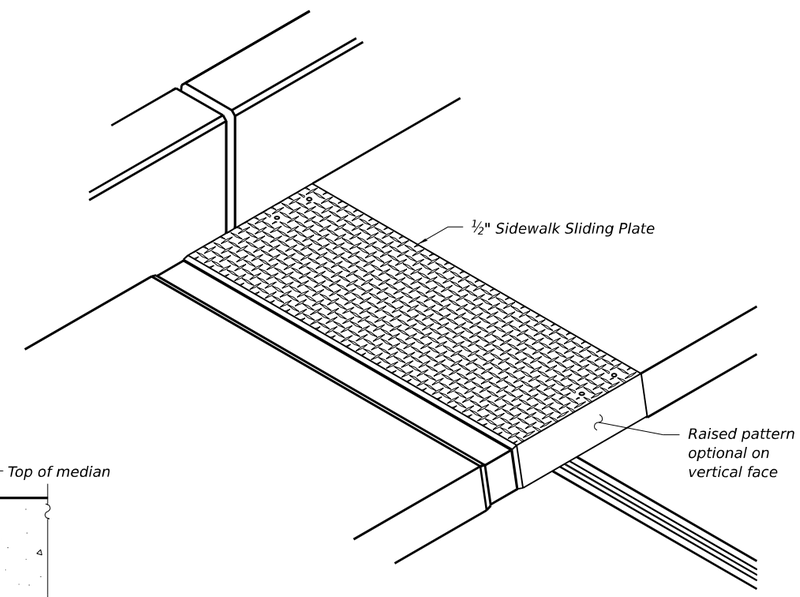

TRIMETRIC VIEW

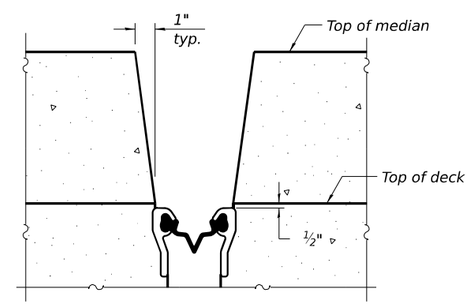

SECTION D-D

(at Rt. ∠'s)

MODEL: Default
FILE NAME: pw://mb-us-pw.bentley.com:mb-us-pw-03/Documents/Chicago_IL/01_Projects/D1_IDOT_Var_DEservs_PTB208_005/W01 - 196294/3.0 Deliverables/3.3 CADD Data\Sheets\0220163-62T17-020-PreformedJnt.dgn

8/9/2024 3:17:47 PM

Michael Baker INTERNATIONAL

USER NAME = Connor.Liss	DESIGNED MLK	REVISED -	
	CHECKED JMK	REVISED -	
PLOT SCALE =	DRAWN JHJ	REVISED -	
PLOT DATE = 8/9/2024	CHECKED MLK/JMK	REVISED -	

STATE OF ILLINOIS
DEPARTMENT OF TRANSPORTATION

PREFORMED JOINT STRIP SEAL
STRUCTURE NO. 022-0163

SHEET S-20 OF S-44 SHEETS

F.A.P. RTE.	SECTION	COUNTY	TOTAL SHEETS	SHEET NO.
0347	0347 22 BJ3	DUPAGE	98	64
		CONTRACT NO. 62T17		
	ILLINOIS	FED. AID PROJECT		

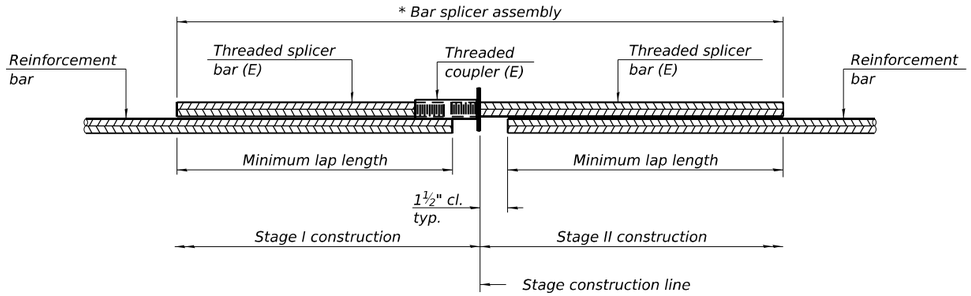

STANDARD BAR SPLICER ASSEMBLY PLAN

Only bar splicer assemblies as presented on the approved QPL list may be used.

Threaded splicer bar length = min. lap length + 1½" + thread length

* Epoxy not required on Bar Splicer Assembly components used in conjunction with black bars.

Location	Bar size	No. assemblies required	Minimum lap length
Deck (Stage 1)	#5	16	3'-6"
Backwall (Stage 1)	#6	8	4'-0"
Deck (Stage 2)	#5	16	3'-6"
Backwall (Stage 2)	#6	8	4'-0"

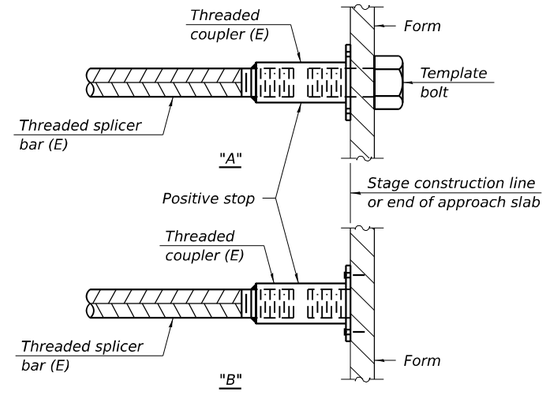

INSTALLATION AND SETTING METHODS

"A" : Set bar splicer assembly by means of a template bolt.
"B" : Set bar splicer assembly by nailing to wood forms or cementing to steel forms.
(E) : Indicates epoxy coating.

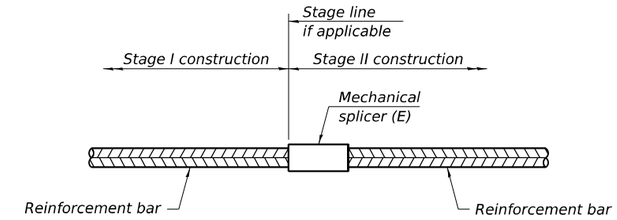

STANDARD MECHANICAL SPLICER

Location	Bar size	No. assemblies required

Notes:
Splicer bars shall be deformed with threaded ends and have a minimum 60 ksi yield strength.
All reinforcement shall be lapped and tied to the splicer bars.
Bar splicer assemblies shall be epoxy coated according to the requirements for reinforcement bars. See Section 508 of the Standard Specifications.
See approved list of bar splicer assemblies and mechanical splicers for alternatives.

BSD-1 5-15-2023

MODEL: Default
FILE NAME: pw://mb-us-pw.bentley.com:mb-us-pw-03/Documents/Chicago_IL/01_Projects/D1_IDOT_Var_DEservs_PTB208_005/W01 - 198294/3.0 Deliverables/3.3 CADD Data/Sheets/0220163-62T17-02-1-BarSpliceAssembly.dgn
8/9/2024 3:18:01 PM

Michael Baker INTERNATIONAL

USER NAME = Connor.Liss	DESIGNED	MLK	REVISED	-	
	CHECKED	JMK	REVISED	-	
PLOT SCALE =	DRAWN	JHJ	REVISED	-	
PLOT DATE = 8/9/2024	CHECKED	MLK/JMK	REVISED	-	

STATE OF ILLINOIS
DEPARTMENT OF TRANSPORTATION

BAR SPLICE ASSEMBLY DETAILS
STRUCTURE NO. 022-0163

SHEET S-21 OF S-44 SHEETS

F.A.P. RTE.	SECTION	COUNTY	TOTAL SHEETS	SHEET NO.
0347	0347 22 BJ3	DUPAGE	98	65

CONTRACT NO. 62T17
ILLINOIS FED. AID PROJECT

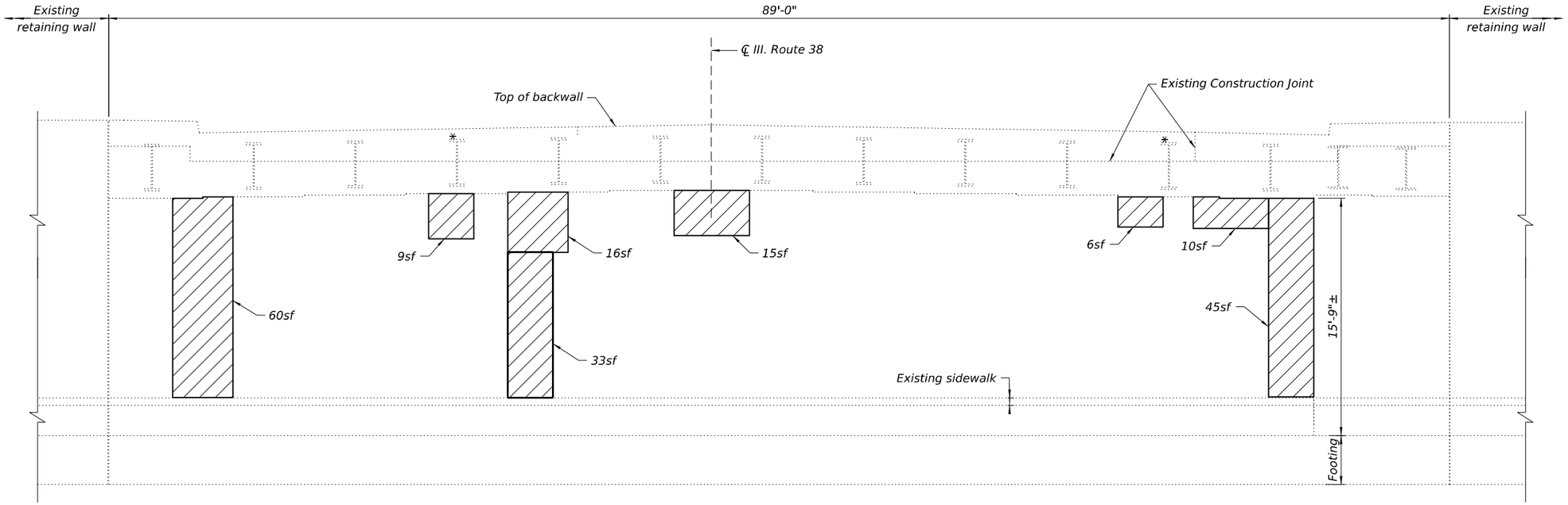

WEST ABUTMENT

(Looking West)

BILL OF MATERIAL

SYMBOL	ITEM	UNIT	QUANTITY
	Structural Repair of Concrete (Depth equal to or less than 5 inches)	Sq. Ft.	194
*	Temporary Shoring and Cribbing	Each	2

NOTE

Repair of the existing abutment shall include, but may not be limited to, the areas shown. The actual areas to be repaired will be determined by the Engineer at the time of construction.

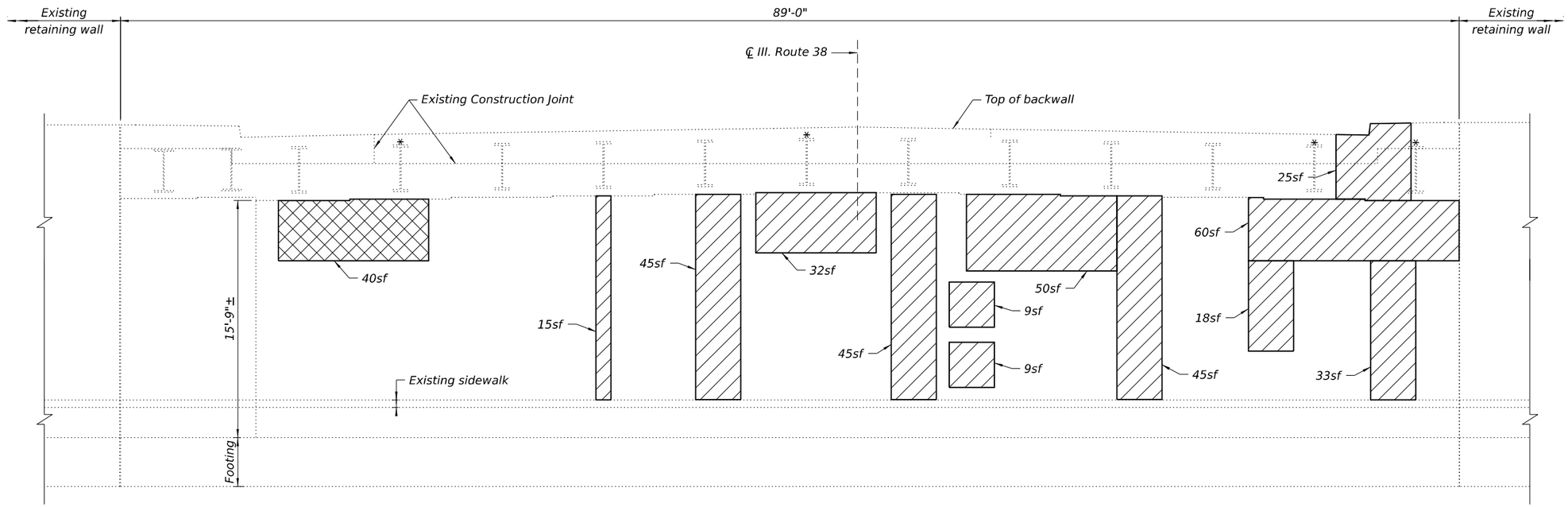

EAST ABUTMENT

(Looking East)

BILL OF MATERIAL

SYMBOL	ITEM	UNIT	QUANTITY
	Structural Repair of Concrete (Depth equal to or less than 5 inches)	Sq. Ft.	386
	Structural Repair of Concrete (Depth Greater than 5 inches)	Sq. Ft.	40
*	Temporary Shoring and Cribbing	Each	4

NOTE

Repair of the existing abutment shall include, but may not be limited to, the areas shown. The actual areas to be repaired will be determined by the Engineer at the time of construction.

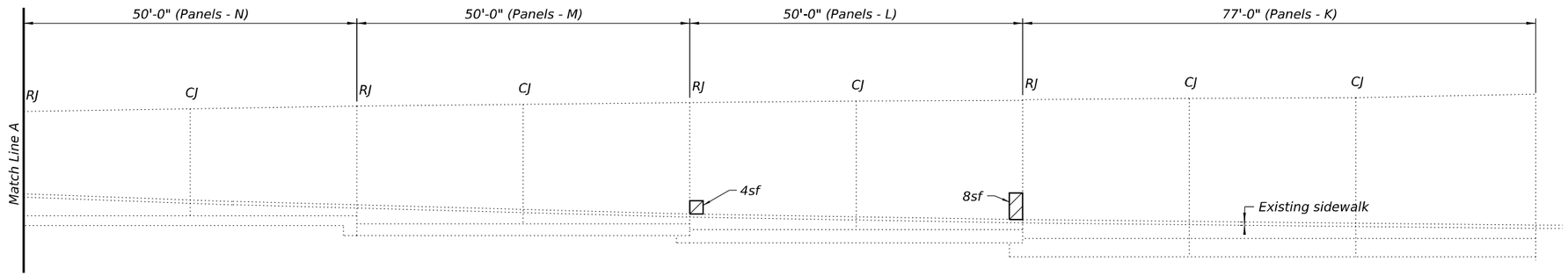

SOUTHWEST RETAINING WALL

(Looking West)

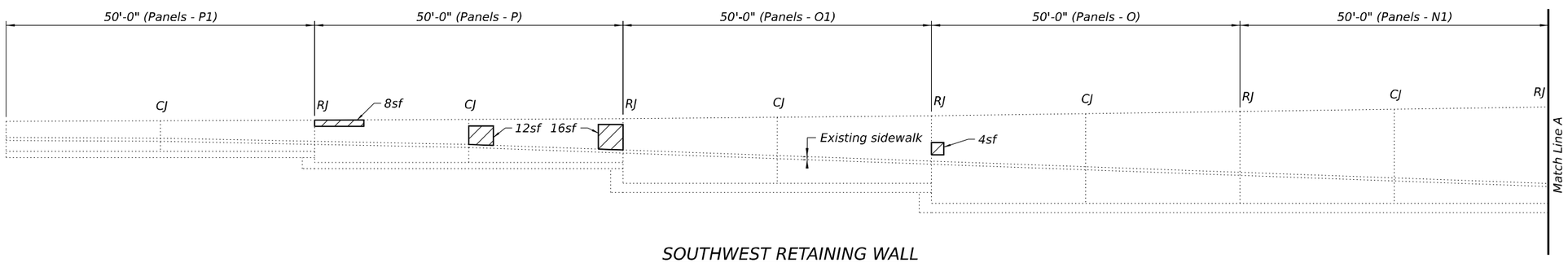

SOUTHWEST RETAINING WALL

(Looking West)

BILL OF MATERIAL

SYMBOL	ITEM	UNIT	QUANTITY
	Structural Repair of Concrete (Depth equal to or less than 5 inches)	Sq. Ft.	52

LEGEND

CJ = controlled Joint
RJ = relief joint

NOTE

Repair of the existing retaining wall shall include, but may not be limited to, the areas shown. The actual areas to be repaired will be determined by the Engineer at the time of construction.

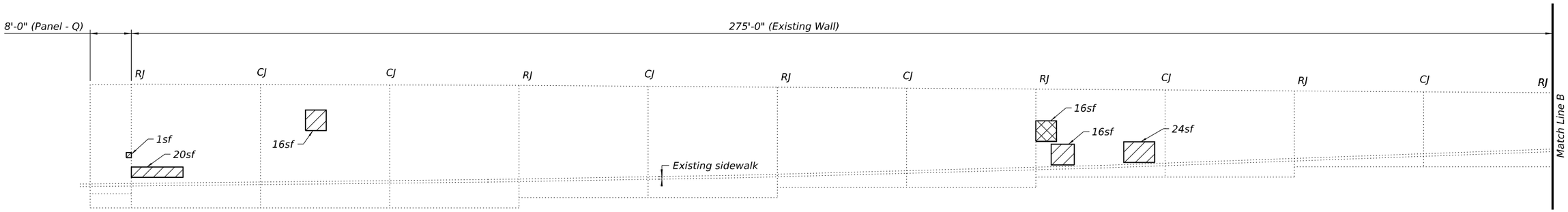

NORTHWEST RETAINING WALL

(Looking West)

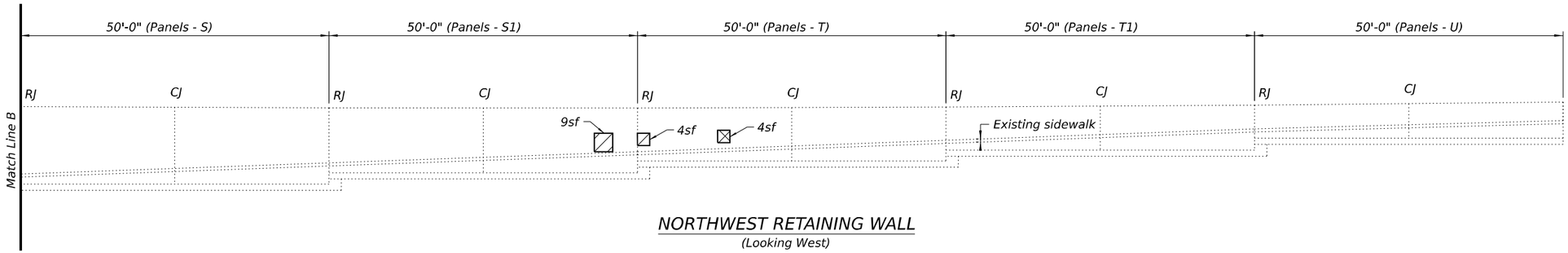

NORTHWEST RETAINING WALL

(Looking West)

BILL OF MATERIAL

SYMBOL	ITEM	UNIT	QUANTITY
	Structural Repair of Concrete (Depth equal to or less than 5 inches)	Sq. Ft.	90
	Structural Repair of Concrete (Depth Greater than 5 inches)	Sq. Ft.	20

LEGEND

CJ = controlled Joint
RJ = relief joint

NOTE

Repair of the existing retaining wall shall include, but may not be limited to, the areas shown. The actual areas to be repaired will be determined by the Engineer at the time of construction.

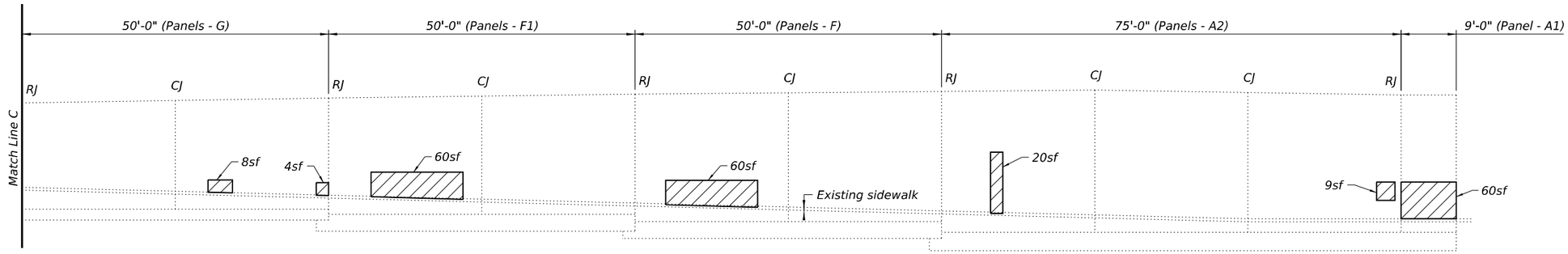

NORTHEAST RETAINING WALL
(Looking East)

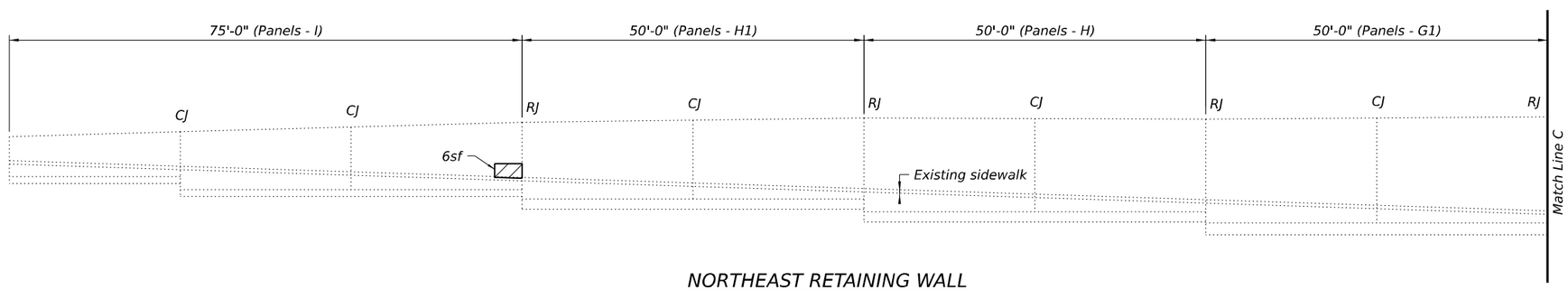

NORTHEAST RETAINING WALL
(Looking East)

BILL OF MATERIAL

SYMBOL	ITEM	UNIT	QUANTITY
	Structural Repair of Concrete (Depth equal to or less than 5 inches)	Sq. Ft.	227

LEGEND
CJ = controlled Joint
RJ = relief joint

NOTE
Repair of the existing retaining wall shall include, but may not be limited to, the areas shown. The actual areas to be repaired will be determined by the Engineer at the time of construction.

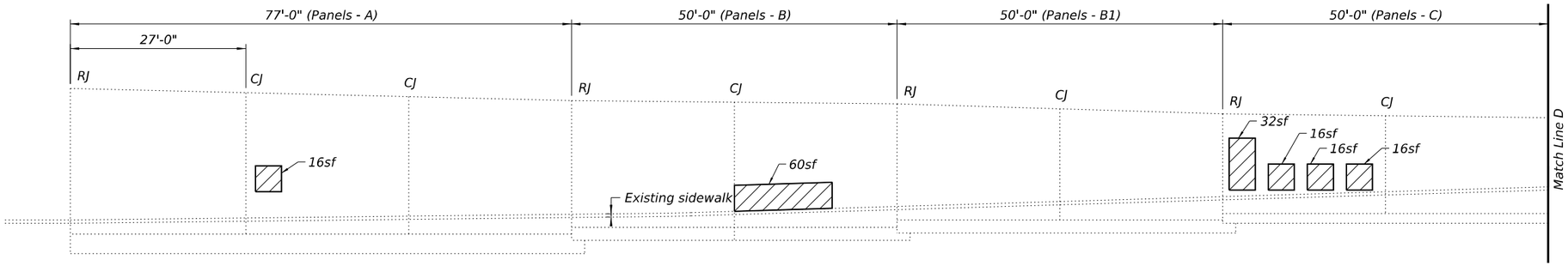

SOUTHEAST RETAINING WALL

(Looking East)

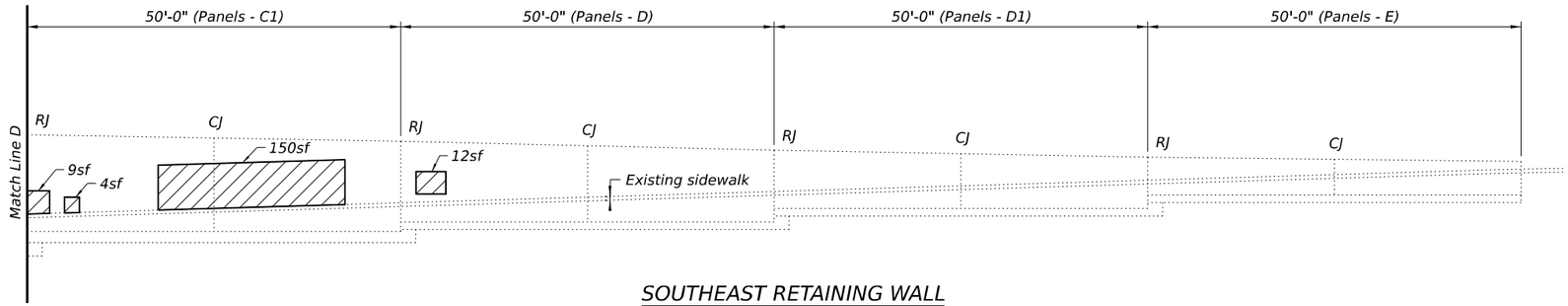

SOUTHEAST RETAINING WALL

(Looking East)

BILL OF MATERIAL

SYMBOL	ITEM	UNIT	QUANTITY
	Structural Repair of Concrete (Depth equal to or less than 5 inches)	Sq. Ft.	331

LEGEND

CJ = controlled Joint
RJ = relief joint

NOTE

Repair of the existing retaining wall shall include, but may not be limited to, the areas shown. The actual areas to be repaired will be determined by the Engineer at the time of construction.

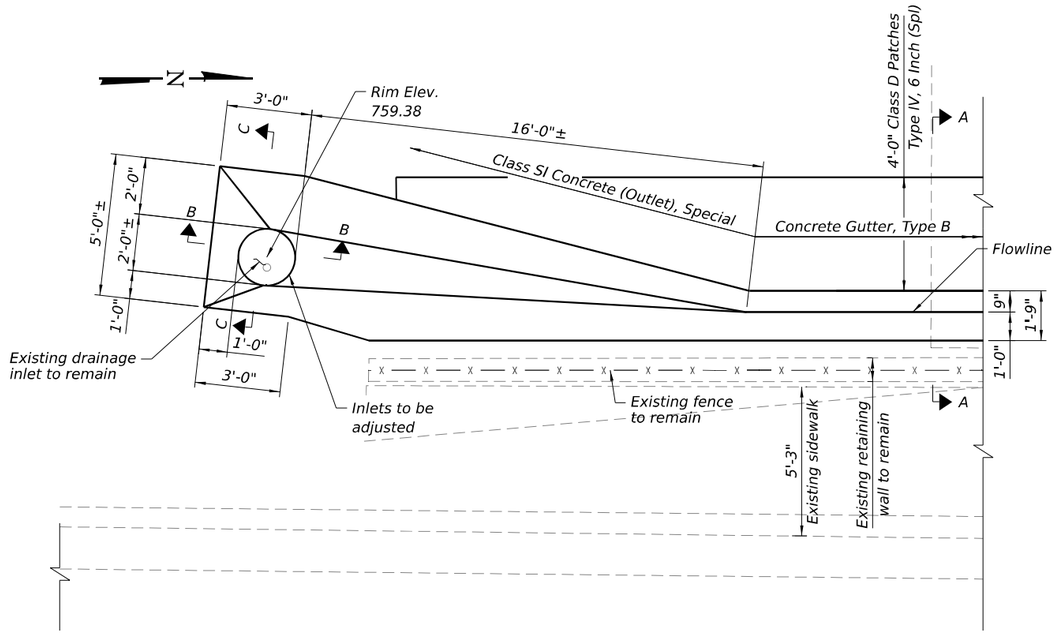

TYPE B GUTTER OUTLET PLAN

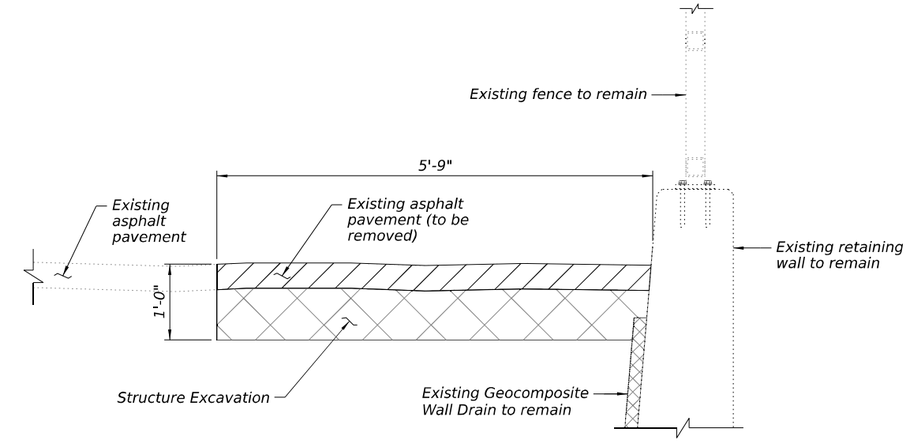

SECTION A-A

(Showing Removal)

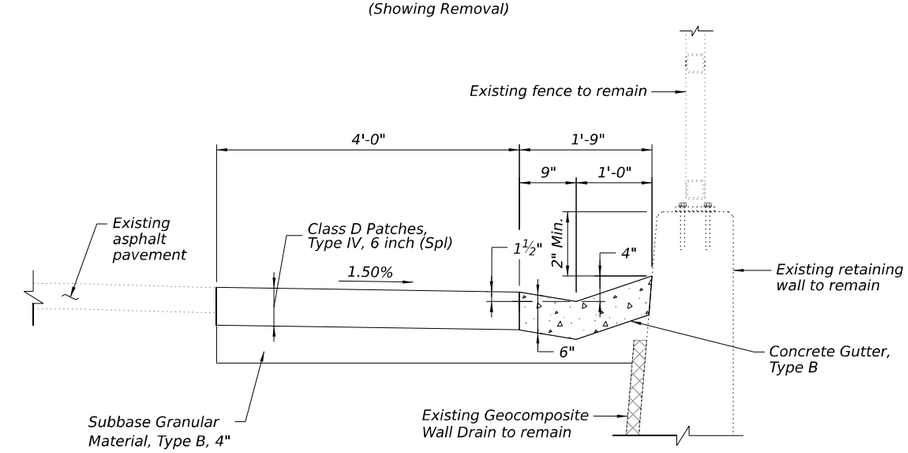

SECTION A-A

(Showing Reconstruction)

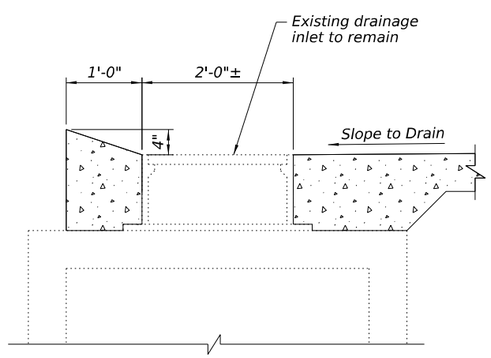

SECTION B-B

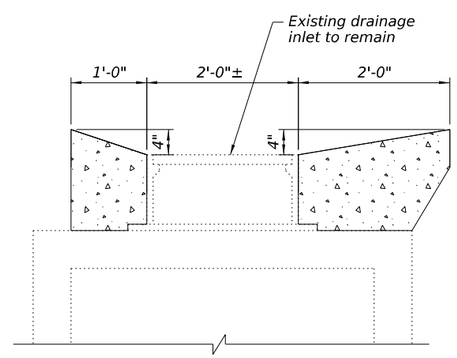

SECTION C-C

STRUCTURAL DRAINAGE DETAILS
BILL OF MATERIAL

ITEM	UNIT	QUANTITY
Structure Excavation	Cu. Yd.	51

ROUTE NO.	SEC.	COUNTY	TOTAL SHEETS	SHEET NO.
F.A.P. 567	*	DU PAGE	106	42
STA		TO STA		
FED. ROAD DIST. NO. 7	ILLINOIS	PROJECT		

* (CY, CR & 533H) R-4 (85)

Note: Hit hook of #9 bars for min. 3½" cl. Use 1'-4" Min. Lap for #4 bars. Use 1'-8" Min Lap for #5 bars.

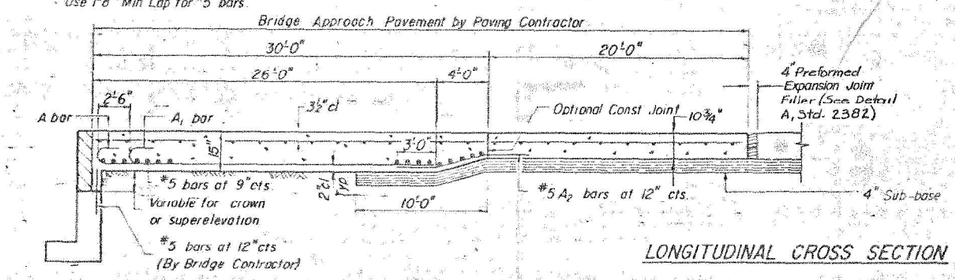

LONGITUDINAL CROSS SECTION

Note: The 4" sub-base shall be of the same material as under adjacent pavement.

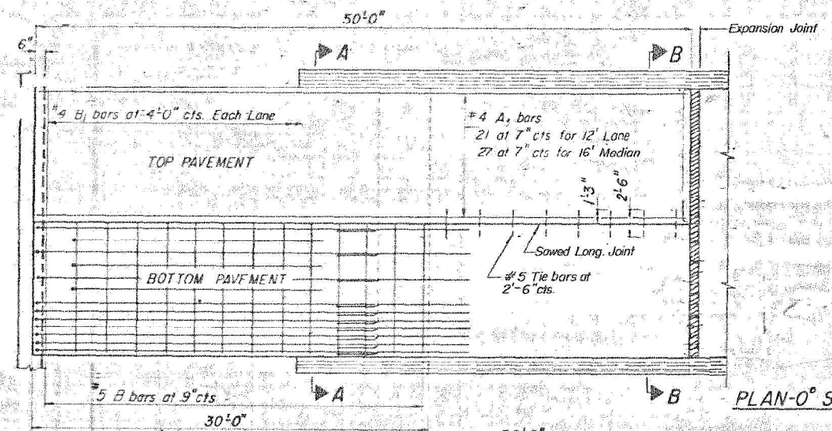

PLAN-0° SKEW

Note: The cost of tie bars, sub-base, and expansion joints shall be included in the cost of Bridge Approach Pavement.

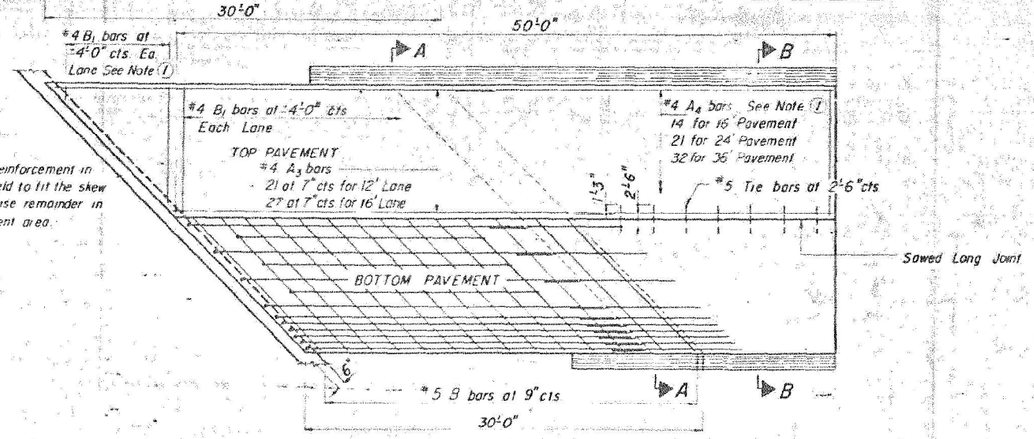

PLAN-SKEW

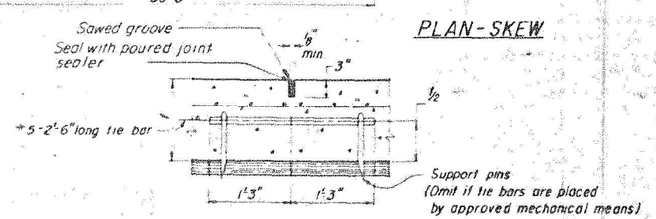

SAWED LONG. JOINT

Illinois Department of Transportation

PASSED May 20, 1981
Engineer of Bridge and Traffic Structures

APPROVED May 20, 1981
Engineer of Design

ISSUED 1-2-75

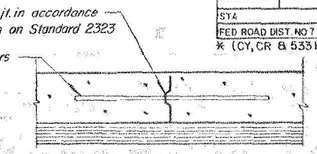

OPTIONAL LONG. CONST. JOINT

As approved by the Engineer, the contractor may elect to reduce the widths by use of the Optional Longitudinal Construction Joint shown. Joint shall be located at the edge of Traffic Lane.

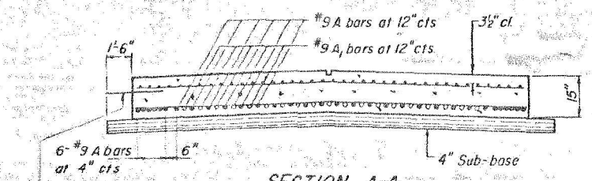

SECTION A-A

Note:
When the road plans show curb and gutter, gutter or bridge approach shoulder pavement adjacent to approach slabs, place ½" ø steel tie bars at 2'-6" centers in accordance with the details for Bulkhead Longitudinal Construction Joint shown on Standard 2323. Cost of the tie bars will be included in the contract unit price for the adjacent item.
Transitions for curb and gutter shall be as shown on the plans.

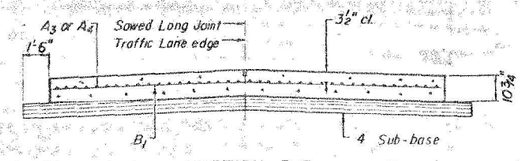

SECTION B-B

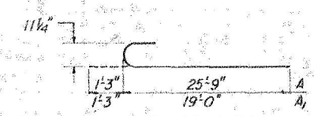

BARS A & A1

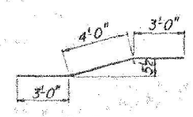

BAR A2

BRIDGE APPROACH PAVEMENT
2360 SPECIAL

(Sheet 1 of 2)

STANDARD 2360-2

USER NAME = Connor.Liss	DESIGNED MLK	REVISED -
	CHECKED JMK	REVISED -
PLOT SCALE =	DRAWN JHJ	REVISED -
PLOT DATE = 8/9/2024	CHECKED MLK/JMK	REVISED -

Michael Baker INTERNATIONAL

STATE OF ILLINOIS
DEPARTMENT OF TRANSPORTATION

EXISTING BRIDGE PLANS (FOR REFERENCE ONLY)
STRUCTURE NO. 022-0163

SHEET S-29 OF S-44 SHEETS

F.A.P. RTE.	SECTION	COUNTY	TOTAL SHEETS	SHEET NO.
0347	0347 22 BJ3	DUPAGE	98	73
		CONTRACT NO. 62T17		
		ILLINOIS	FED. AID PROJECT	

MODEL: Default
FILE NAME: pw://mb-us-pw.bentley.com:mb-us-pw-03/Documents/Chicago_IL/01_Projects/D1_IDOT_Var_DEservs_PTB208_005/W01 - 19829413.0 Deliverables/3.3 CADD Data/Sheets/0220163-62T17-029-Existing Bridge Plans 1 of 16.dgn

8/9/2024 3:19:36 PM

ROUTE NO	SEC	COUNTY	TOTAL SHEETS	SHEET NO.
F.A.P 567	*	DU PAGE	106	43
STA		TO STA		
FED ROAD DIST NO 7	ILLINOIS	PROJECT		

* (GY, GR & 533H) R-4 (85)

QUANTITIES FOR 50 FOOT APPROACH SLAB

16-FOOT WIDTH PAVEMENT

Skew Angle	Bottom Reinforcement #5 B bars No.	Length	A, A1, A2	B1	Top Reinforcement #4 A3 bars No.	Length	#4 A4 bars No.	Length	Total Weight bars-lbs.	
0°	40	15'-6"	24-#9 A bars 27'-0" 11-#9 A1 bars 20'-3" 24-#5 A2 bars 10'-0"	13-#4 B1 bars 15'-6"	54	25'-6"	—	—	4910	Bridge Approach Pavement 89 Sq. Yds. Bit. Conc. Surface Course, Class I 8 Tons
5°	40	15'-7"			54	25'-4"	14	3'-11"	4950	
10°	40	15'-9"			54	25'-0"	14	5'-2"	4950	
15°	40	16'-1"			54	24'-9"	14	6'-5"	4970	
20°	40	16'-6"			54	24'-5"	14	7'-9"	4990	
25°	40	17'-1"			54	24'-0"	14	9'-2"	5010	
30°	40	17'-11"			54	23'-8"	14	10'-9"	5050	
35°	40	18'-11"			54	23'-3"	14	12'-6"	5090	
40°	40	20'-3"			54	22'-9"	14	14'-5"	5150	
45°	40	21'-11"			54	22'-2"	14	16'-8"	5220	
50°	40	24'-1"			54	21'-6"	14	19'-4"	5310	
55°	40	27'-0"			54	20'-8"	14	22'-8"	5430	
60°	40	31'-0"			54	19'-8"	14	26'-11"	5600	

24-FOOT WIDTH PAVEMENT

Skew Angle	Bottom Reinforcement #5 B bars No.	Length	A, A1, A2	B1	Top Reinforcement #4 A3 bars No.	Length	#4 A4 bars No.	Length	Total Weight bars-lbs.	
0°	40	23'-6"	32-#9 A bars 27'-0" 19-#9 A1 bars 20'-3" 32-#5 A2 bars 10'-0"	26-#4 B1 bars 11'-6"	84	25'-6"	—	—	7190	Bridge Approach Pavement 133 Sq. Yds. Bit. Conc. Surface Course, Class I 11 Tons
5°	40	23'-7"			84	25'-2"	21	4'-9"	7240	
10°	40	23'-10"			84	24'-8"	21	6'-11"	7250	
15°	40	24'-4"			84	24'-0"	21	9'-1"	7270	
20°	40	25'-0"			84	23'-6"	21	11'-5"	7300	
25°	40	25'-11"			84	22'-10"	21	13'-10"	7340	
30°	40	27'-2"			84	22'-3"	21	16'-6"	7390	
35°	40	28'-8"			84	21'-6"	21	19'-6"	7450	
40°	40	30'-8"			84	20'-8"	21	22'-10"	7540	
45°	40	33'-3"			84	19'-8"	21	26'-8"	7640	
50°	80	19'-1"			42	35'-3"	21	31'-3"	7800	
55°	80	21'-4"			42	32'-6"	21	36'-11"	7990	
* 60°										

* Requires greater than 50 foot Approach Slab

64-FOOT WIDTH PAVEMENT

Skew Angle	Bottom Reinforcement #5 B bars No.	Length	A, A1, A2	B1	Top Reinforcement #4 A3 bars No.	Length	#4 A4 bars No.	Length	Total Weight bars-lbs	
0°	80	32'-8"	72-#9 A bars 27'-0" 59-#9 A1 bars 20'-3" 72-#5 A2 bars 10'-0"	52-#4 B1 bars 11'-6" 13-#4 B2 bars 15'-6"	222	25'-6"	—	—	18470	Bridge Approach Pavement 356 Sq. Yds.
5°	80	32'-8"			222	25'-6"	—	—	18470	
10°	80	32'-8"			222	25'-6"	—	—	18470	
15°	80	32'-8"			222	25'-6"	—	—	18470	
20°	80	32'-8"			222	25'-6"	—	—	18470	
25°	80	32'-8"			222	25'-6"	—	—	18470	
30°	80	32'-8"			222	25'-6"	—	—	18470	
35°	80	32'-8"			222	25'-6"	—	—	18470	
40°	80	32'-8"			222	25'-6"	—	—	18470	
* 45°										
* 50°										
* 55°										
* 60°										

* Requires greater than 50 foot Approach Slab

TOP OF SLAB BAR ARRANGEMENT

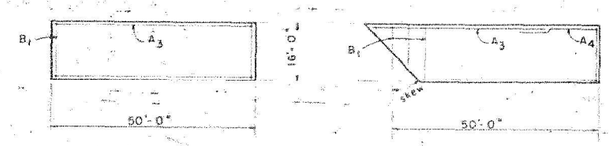

TOP OF SLAB BAR ARRANGEMENT

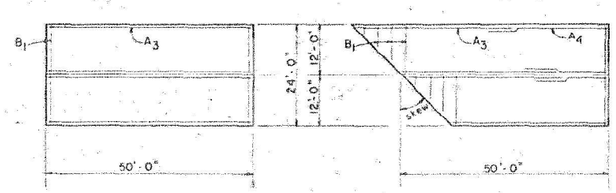

TOP OF SLAB BAR ARRANGEMENT

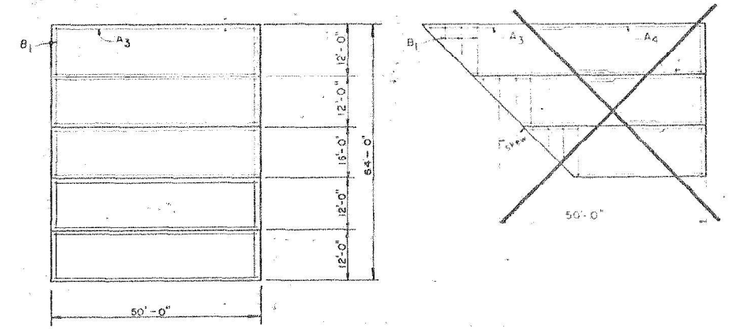

Illinois Department of Transportation

PASSED May 20, 1981
Engineer of Bridge and Traffic Structures

APPROVED May 20, 1981
Engineer of Design

ISSUED 10-17-75

BRIDGE APPROACH PAVEMENT

2360 SPECIAL

(Sheet 2 of 2)

STANDARD 2360-2

Full Size D.W.W. Sr.

I-5,260

USER NAME = Connor.Liss	DESIGNED MLK	REVISED -	
	CHECKED JMK	REVISED -	
PLOT SCALE =	DRAWN JHJ	REVISED -	
PLOT DATE = 8/9/2024	CHECKED MLK/JMK	REVISED -	

Michael Baker INTERNATIONAL

STATE OF ILLINOIS
DEPARTMENT OF TRANSPORTATION

EXISTING BRIDGE PLANS (FOR REFERENCE ONLY)
STRUCTURE NO. 022-0163

SHEET S-30 OF S-44 SHEETS

F.A.P. RTE.	SECTION	COUNTY	TOTAL SHEETS	SHEET NO.
0347	0347 22 BJ3	DUPAGE	98	74
		CONTRACT NO. 62T17		
		ILLINOIS	FED. AID PROJECT	

MODEL: Default
FILE NAME: pw://mb-us-sw.bentley.com:mb-us-pw-43/Documents/Chicago_IL/01_Projects/D1_IDOT_Var_DEservs_PTB208_005/W01 - 196294/3.0 Deliverables/3.3 CADD Data/Sheets/0220163-82T17-030-Existing Bridge Plans 2 of 16.dgn

8/9/2024 3:19:55 PM

STATE OF ILLINOIS
DEPARTMENT OF TRANSPORTATION

ROUTE NO.	SECTION	COUNTY	TOTAL SHEETS	SHEET NO.
F.A.P.567	X	DUPAGE	106	79
FED. ROAD DIST. NO. 7		ILLINOIS	FED. AID PROJECT	

*(CY,CR&533H)R-4(85)

SHEET NO.5
18 SHEETS

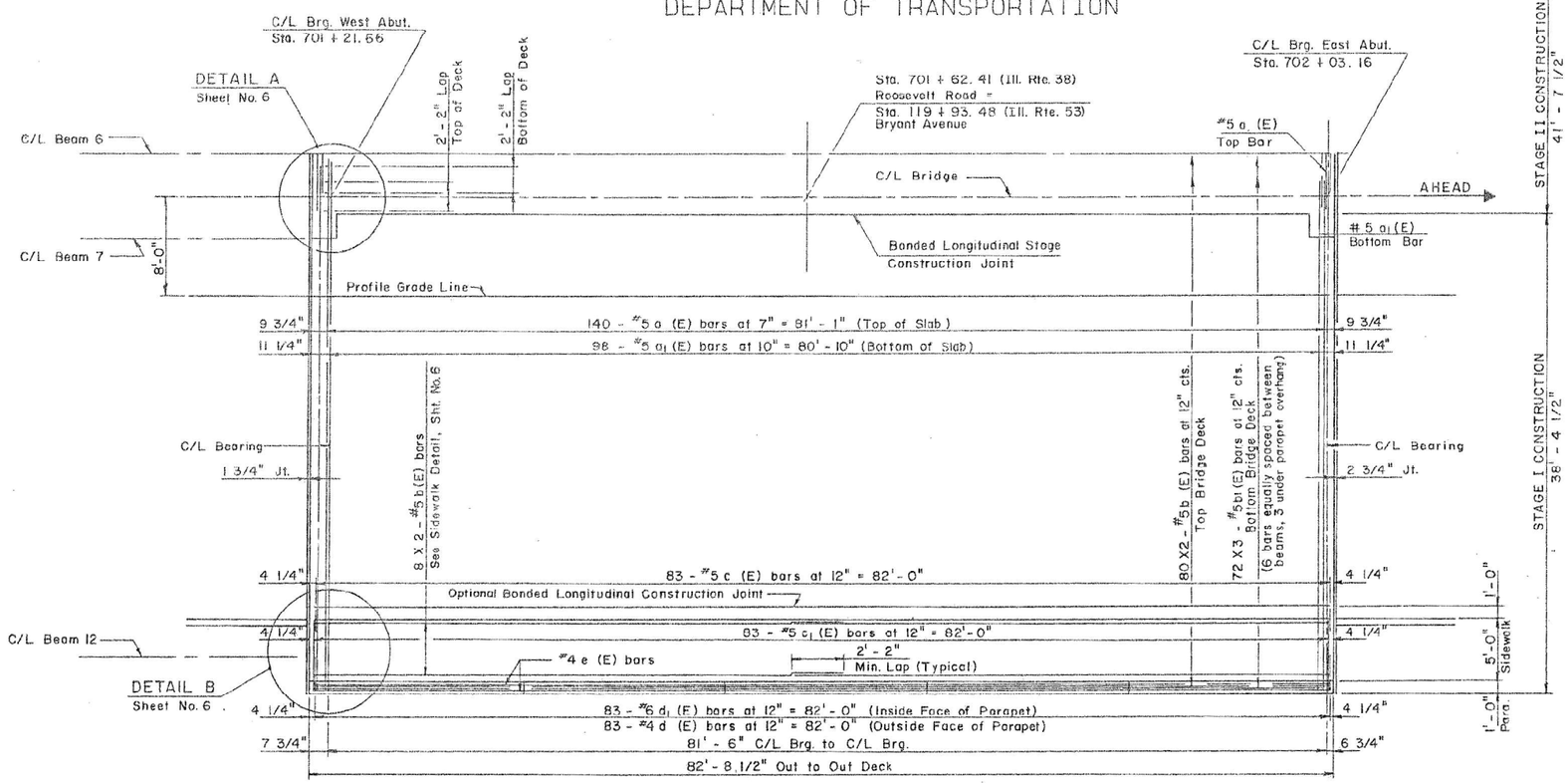

PLAN

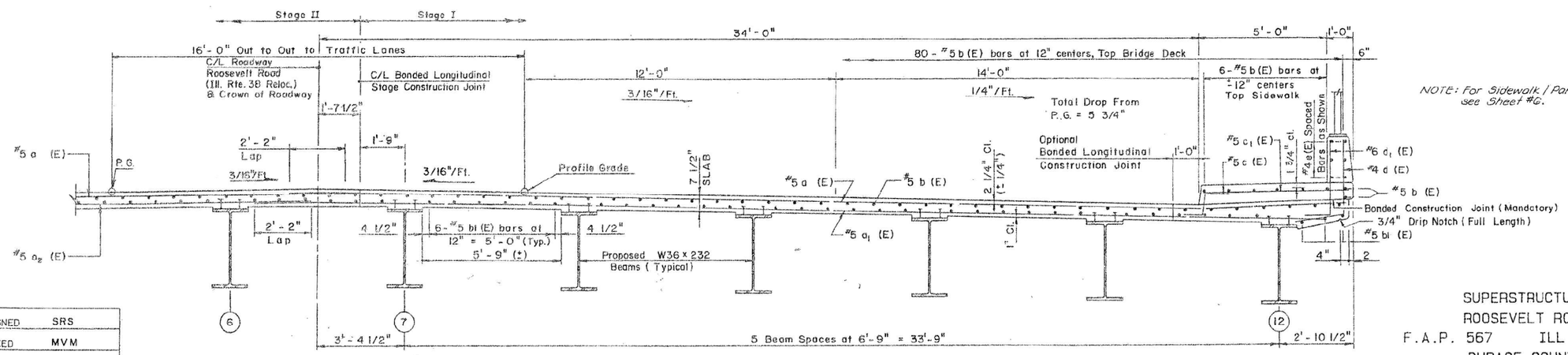

CROSS SECTION - HALF DECK
STAGE I CONSTRUCTION (LOOKING EAST)
(SHOWING LAPS WITH STAGE II REINFORCEMENT)

DESIGNED	SRS
CHECKED	MVM
DRAWN	BSB
CHECKED	MVM

SUPERSTRUCTURE
ROOSEVELT ROAD
F.A.P. 567 ILL. RTE. 38
DUPAGE COUNTY
STA. 701 + 62.41

MODEL: Default
FILE NAME: pw://mb-us-pw.bentley.com:mb-us-pw-03\Documents\Chicago_IL\01_Projects\D1_IDOT_Var_DEservs_PTB208_005\W01 - 19829413.0 Deliverables\3.3 CADD Data\Sheets\0220163-82T17-031-Existing Bridge Plans 3 of 16.dgn

Michael Baker INTERNATIONAL

USER NAME = Connor.Liss	DESIGNED MLK	REVISED -	
	CHECKED JMK	REVISED -	
PLOT SCALE =	DRAWN JHJ	REVISED -	
PLOT DATE = 8/9/2024	CHECKED MLK/JMK	REVISED -	

STATE OF ILLINOIS
DEPARTMENT OF TRANSPORTATION

EXISTING BRIDGE PLANS (FOR REFERENCE ONLY)
STRUCTURE NO. 022-0163
SHEET S-31 OF S-44 SHEETS

F.A.P. RTE.	SECTION	COUNTY	TOTAL SHEETS	SHEET NO.
0347	0347 22 BJ3	DUPAGE	98	75
		CONTRACT NO. 62T17		
		ILLINOIS	FED. AID PROJECT	

8/9/2024 3:20:08 PM

STATE OF ILLINOIS
DEPARTMENT OF TRANSPORTATION

ROUTE NO.	SECTION	COUNTY	TOTAL SHEETS	SHEET NO.
FAP 567	*	DUPAGE	106	80
FED. ROAD DIST. NO. 7	ILLINOIS	FED. AID PROJECT		

SHEET NO. 6
18 SHEETS

*(CY,CR & 533H) R-4(85)

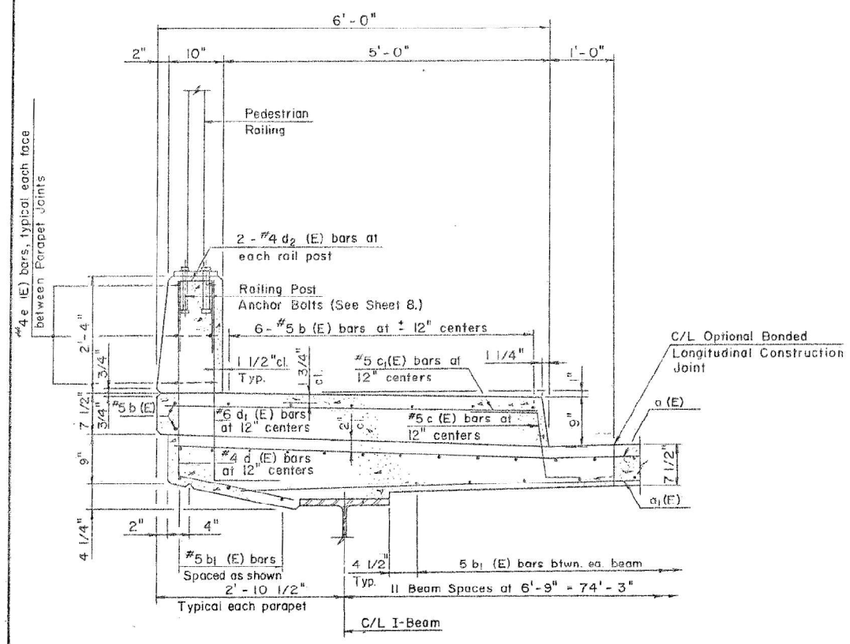

PARAPET/SIDEWALK DETAIL

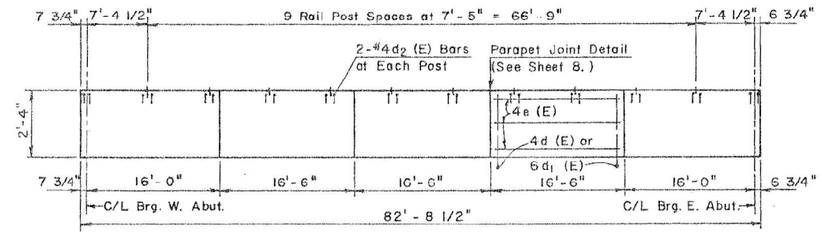

PARAPET ELEVATION

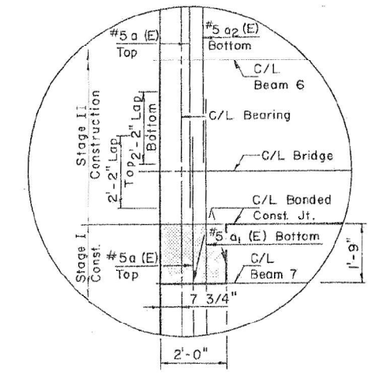

DETAIL A

Indicates Blockout for concrete placed during Stage II.

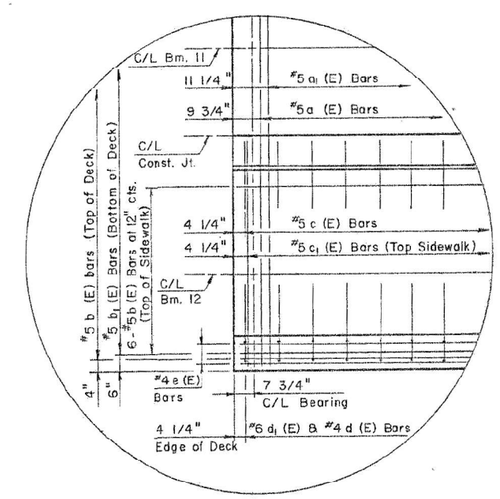

DETAIL B

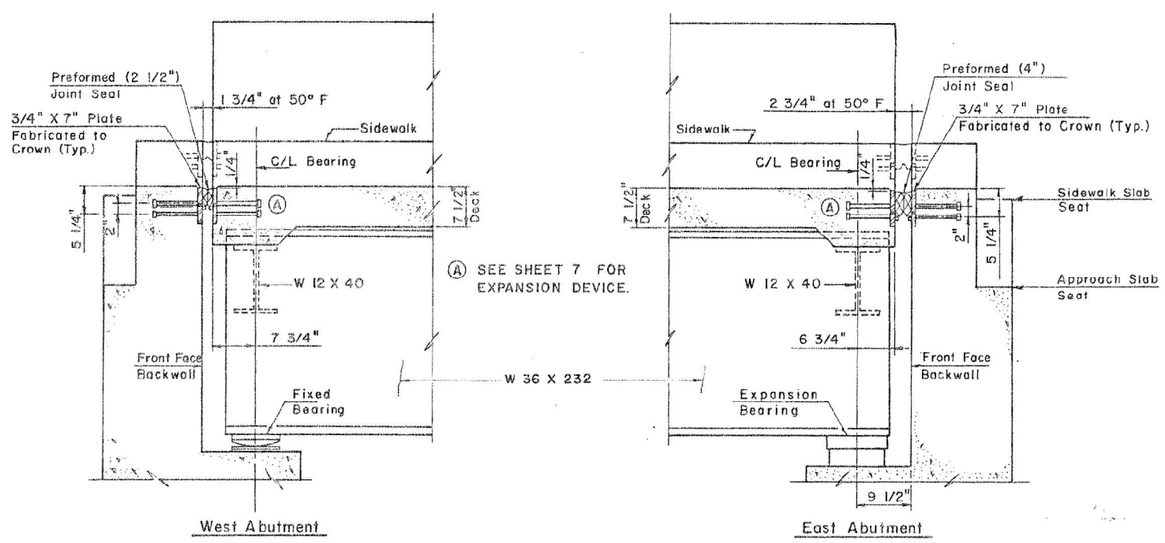

DETAILS OF EXPANSION JOINTS

DESIGNED	SRS
CHECKED	MVM
DRAWN	BSB
CHECKED	MVM

SUPERSTRUCTURE DETAILS
ROOSEVELT ROAD
F.A.P. 567 ILL. RTE. 38
DUPAGE COUNTY
STA. 701 + 62.41

STATE OF ILLINOIS
DEPARTMENT OF TRANSPORTATION

ROUTE NO.	SECTION	COUNTY	TOTAL SHEETS	SHEET NO.
F.A.P.567	*	DUPAGE	106	81
FED. ROAD DIST. NO. 7		ILLINOIS	FED. AID PROJECT	

SHEET NO. 7
18 SHEETS

*(CY,CR & 533H) R-4 (85)

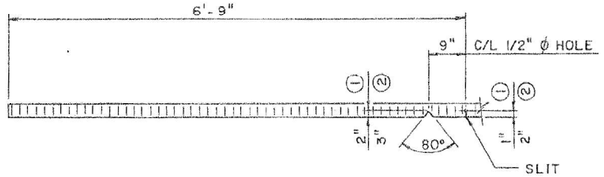

SEAL CUT - OUT

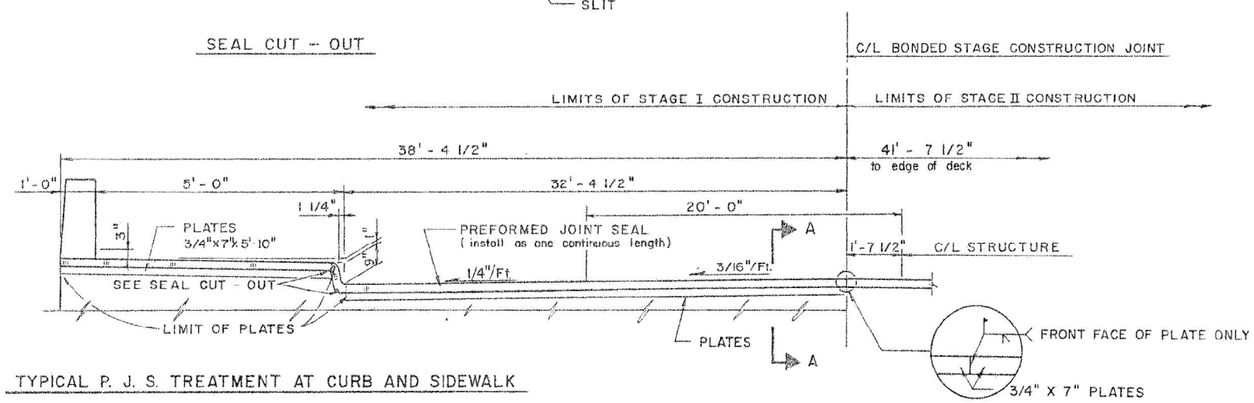

TYPICAL P. J. S. TREATMENT AT CURB AND SIDEWALK

PLATE WELDING DETAIL

ELEVATION AT EXPANSION DEVICE
(LOOKING BACK STATION)

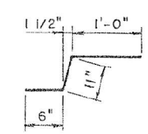

BAR c (E)

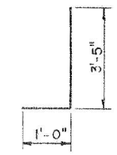

BAR d_1 (E)

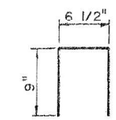

BAR d_2 (E)

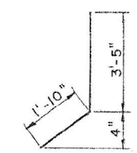

BAR d (E)

BILL OF MATERIAL

Bar	Number	Size	Length	Shape
a (E)	280	#5	40'-9"	—
a_1 (E)	93	#5	41'-10"	—
a_2 (E)	93	#5	39'-8"	—
b (E)	192	#5	42'-2"	—
b_1 (E)	216	#5	28'-9"	—
c (E)	166	#5	2'-5"	⌐
c_1 (E)	166	#5	5'-8"	—
d (E)	166	#4	5'-3"	⌋
d_1 (E)	166	#6	4'-5"	⌋
d_2 (E)	48	#4	2'-1"	⊓
e (E)	60	#4	16'-2"	—
Class X Conc. Superstr.			Cu.Yd.	205.6
Rein. Bars (Epoxy Ctd.)			Pound	38,950
Pref. Jt. Seal 2 1/2"			Lin.Ft.	82
Pref. Jt. Seal 4"			Lin.Ft.	82

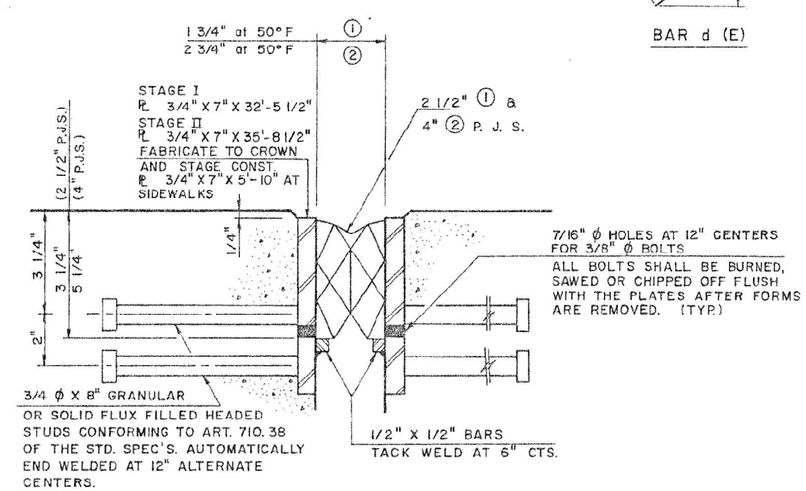

SECTION A-A
(TOTAL NUMBER OF STUDS REQUIRED = 320)

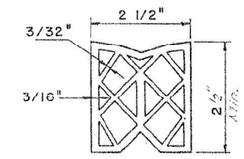

2 1/2" P. J. S. 1
(WEST ABUT.)

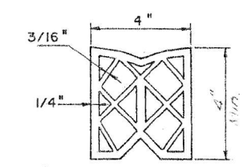

4" P. J. S. 2
(EAST ABUT.)

PREFORMED JOINT SEALS

DESIGNED	SRS
CHECKED	MVM
DRAWN	BSB
CHECKED	MVM

SUPERSTRUCTURE DETAILS
ROOSEVELT ROAD
F.A.P. 567 ILL. RTE. 38
DUPAGE COUNTY
STA. 701 + 62.41

STATE OF ILLINOIS
DEPARTMENT OF TRANSPORTATION

ROUTE NO.	SECTION	COUNTY	TOTAL SHEETS	SHEET NO.
FAP 567		DUPAGE	106	82

SHEET NO. 8
18 SHEETS

X(CY,CR & 533H)R-4(85)

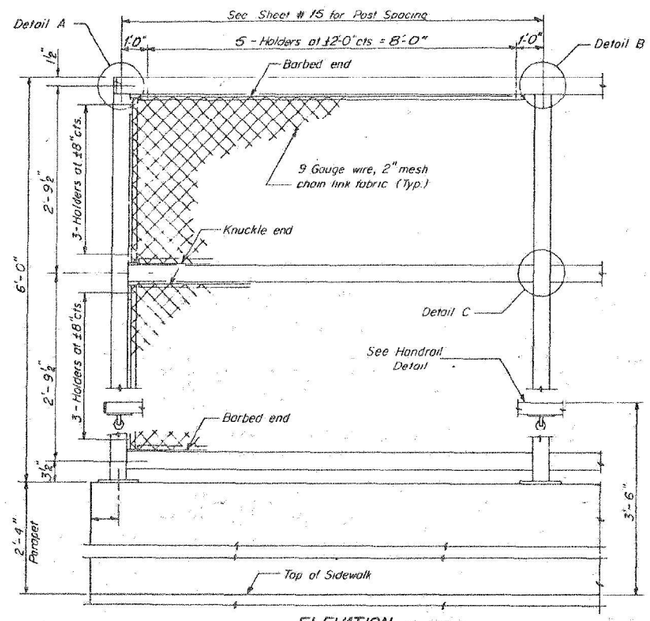

ELEVATION
(Inside Face)

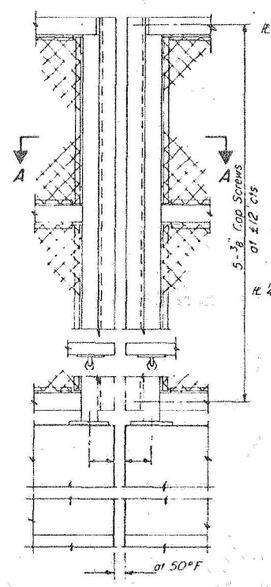

ELEVATION
(At Expansion Joint)

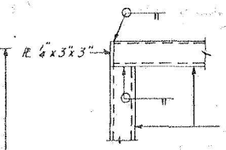

DETAIL A

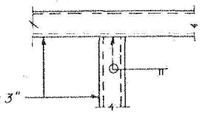

DETAIL B

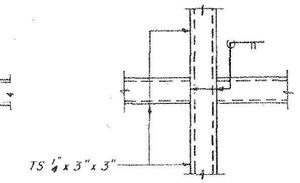

DETAIL C

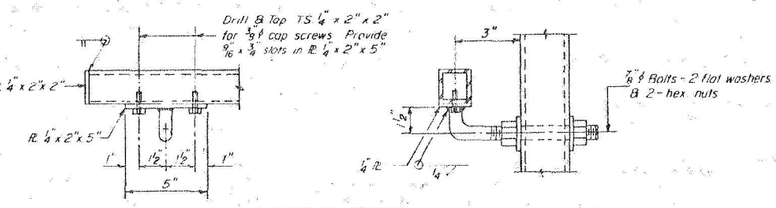

HANDRAIL DETAIL

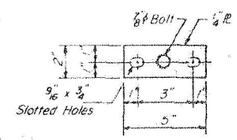

BASE PL
(Handrail)

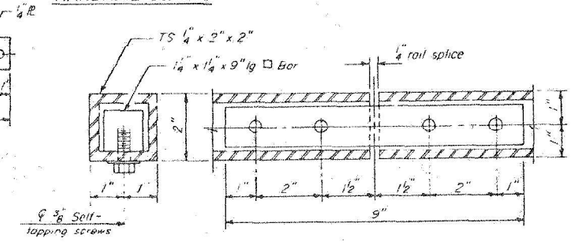

HANDRAIL SPLICE

NOTES

Railing shall be in accordance with Section 508 of the Standard Specifications, except as noted, and shall be paid for at the Contract Unit Price per lineal foot for Pedestrian Railing.

The material for the chain link fabric and the 9 gauge fabric ties shall be in accordance with Article 710.33 of the Standard Specifications.

Installation of the chain link fabric shall be in accordance Section 629 of the Standard Specifications.

Hollow structural steel tubing shall conform to the requirements of ASTM designation A 500, Grade B, structural steel tubing.

All other steel shapes and plates shall conform to the requirements of AASHTO M183.

"All posts, railing, splices, anchor devices and bent plates shall be galvanized after shop fabrication in accordance with AASHTO M-111 and ASTM A-385." "All bolts, nuts and washers shall be galvanized in accordance with AASHTO M-232.

Vent holes for galvanizing shall be placed in the posts and rails at locations that will not allow the accumulation of moisture in these members."

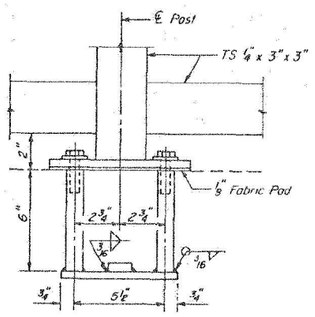

ANCHOR BOLT DETAILS

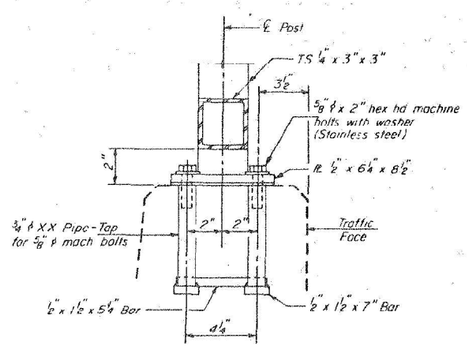

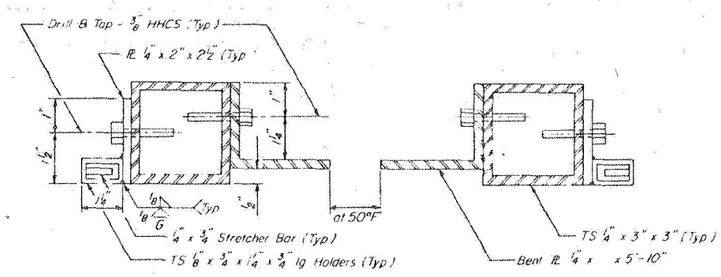

SECTION A-A

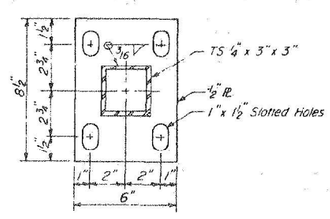

BASE PL

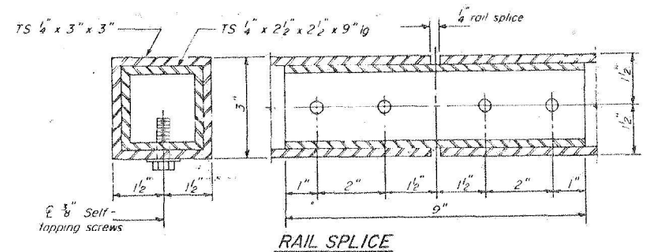

RAIL SPLICE

BILL OF MATERIAL

Item	Unit	Quantity
Pedestrian Railing	Lin Ft	163

DESIGNED	MVM
CHECKED	SRS
DRAWN	ALF
CHECKED	MVM

R-28 12-1-83 (10'-0" Maximum Post Spacing)

PEDESTRIAN RAILING

ROOSEVELT ROAD
F. A. P. 567 ILL. RTE. 38
DUPAGE COUNTY
STA. 701 + 62.41

STATE OF ILLINOIS
DEPARTMENT OF TRANSPORTATION

ROUTE NO.	SECTION	COUNTY	TOTAL SHEETS	SHEET NO.
FAP 567	*	DUPAGE	106	87
FED. ROAD DIST. NO. 7		ILLINOIS	FED. AID PROJECT	

SHEET NO. 13
18 SHEETS

*(CY,CR & 533H) R-4 (85)

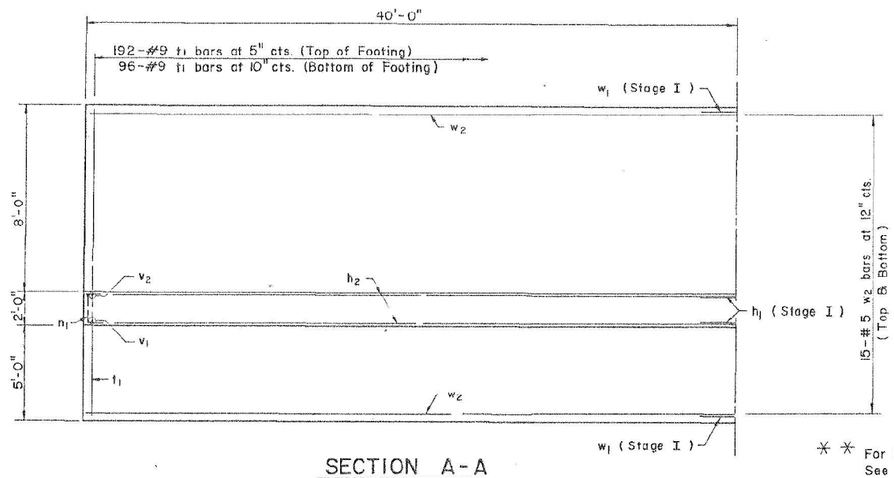

SECTION A-A

** For Limits of Stage I Removal, See Construction Staging, Sheet No. 2.

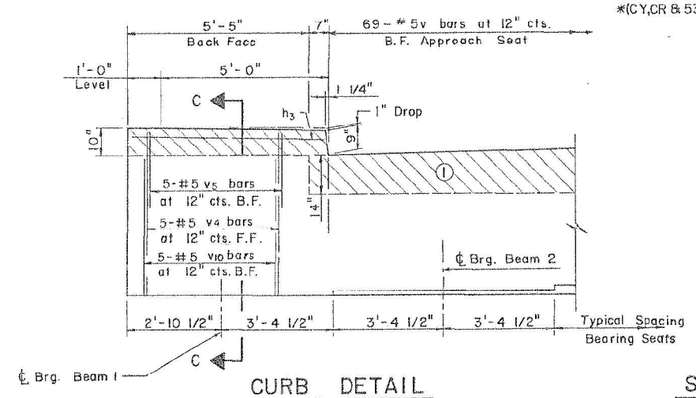

CURB DETAIL

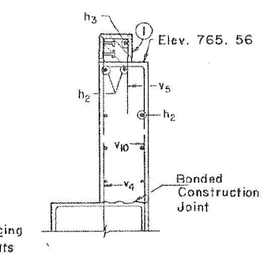

SECTION C-C

(1) Hatched area shall be poured after Superstructure forms have been removed. Quantity shall be Class X Concrete Superstructure.

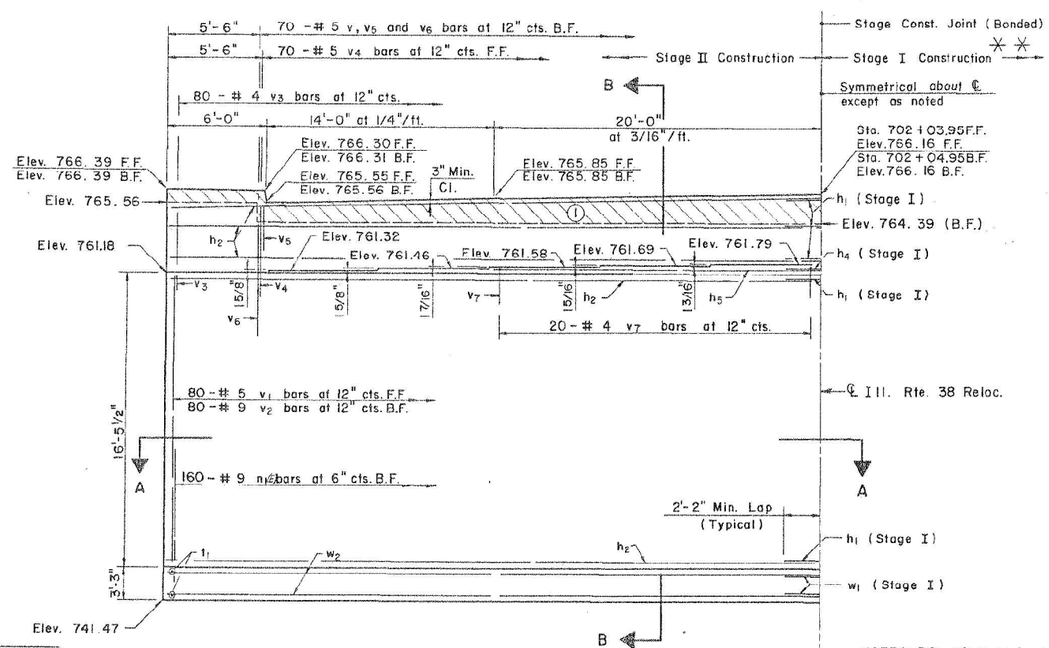

ELEVATION
STAGE II SHOWN
STAGE I SIMILAR

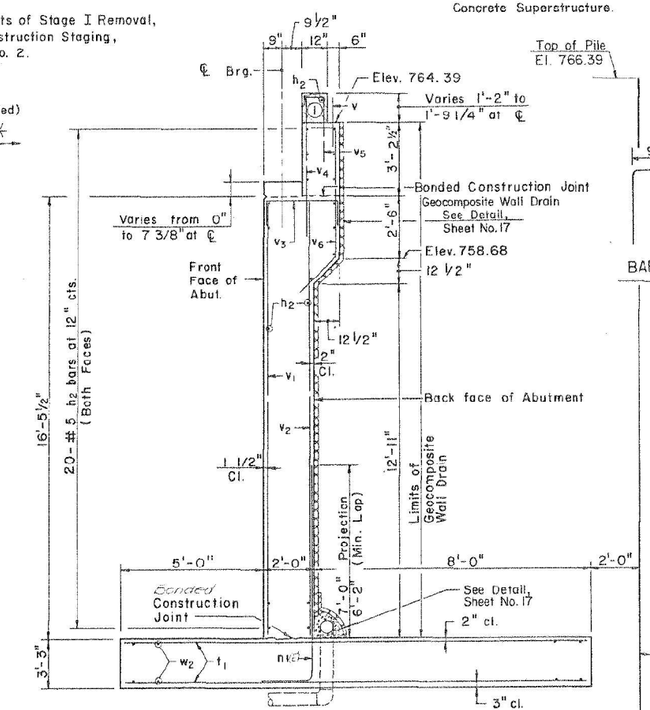

SECTION B-B

Maximum Design Soil Bearing Pressure = 2.42 T.S.F.

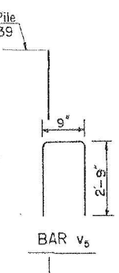

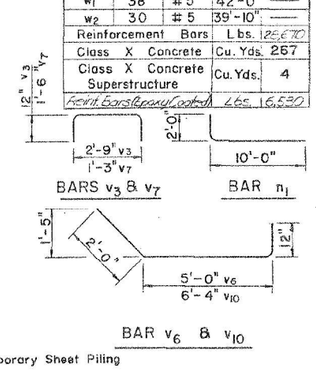

BILL OF MATERIAL

Bar	No.	Size	Length	Shape
h1	41	#5	42'-0"	
h2	41	#5	39'-10"	
h3	2	#5	5'-8"	
h4	2	#5	22'-2"	
h5	2	#5	20'-0"	
n1 (E)	160	#9	12'-0"	
t1	288	#9	14'-8"	
v	69	#5	2'-0"	
v1	80	#5	16'-3"	
v2	80	#9	16'-3"	
v3	80	#4	4'-9"	
v4	80	#5	6'-0"	
v5	80	#4	6'-3"	
v6	70	#5	8'-0"	
v7	40	#4	4'-3"	
v10	10	#5	9'-4"	
w1	38	#5	42'-0"	
w2	30	#5	39'-10"	
Reinforcement Bars			Lbs.	25,670
Class X Concrete			Cu. Yds.	267
Class X Concrete Superstructure			Cu. Yds.	4
Joint Bars (Epoxy Coated)			Lbs.	6,550

EAST ABUTMENT
ROOSEVELT ROAD
F.A.P. 567 ILL. RTE. 38
DUPAGE COUNTY
STA. 701 + 62.41

DESIGNED	MVM
CHECKED	SRS
DRAWN	SWF
CHECKED	MVM

NOTES: F.F. refers to front face of backwall.
B.F. refers to back face of backwall at approach slab notch.

For detail of pipe through abutment footing, see Sheet # 17.

STATE OF ILLINOIS
DEPARTMENT OF TRANSPORTATION

ROUTE NO.	SECTION	COUNTY	TOTAL SHEETS	SHEET NO.
F.A.P.567	*	DUPAGE	106	88
FED. ROAD DIST. NO. 7	ILLINOIS	FED. AID PROJECT		

SHEET NO. 14
18 SHEETS

*(CY, CR & 533H) R-4 (85)

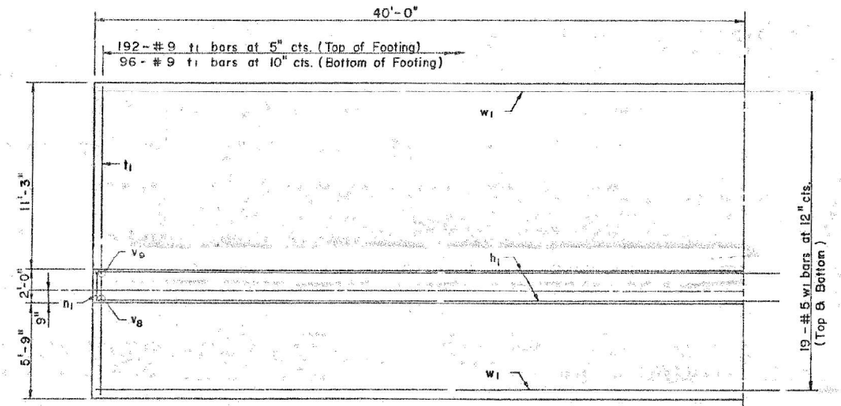

SECTION A-A

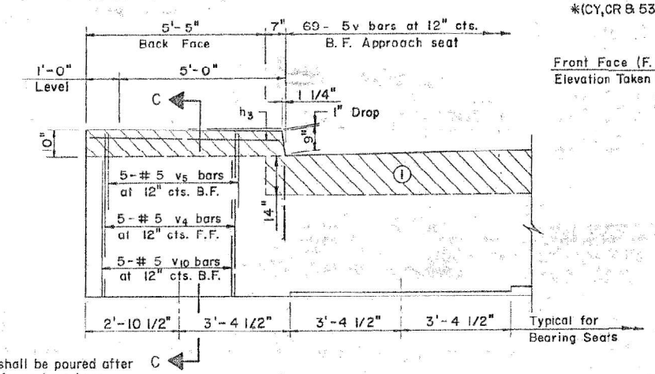

① Hatched area shall be poured after Superstructure forms have been removed. Quantity shall be Class X Concrete Superstructure.

CURB DETAIL

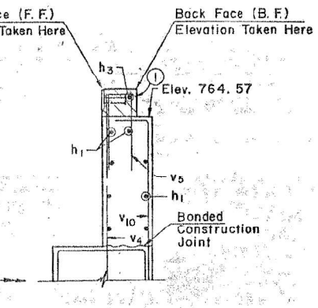

SECTION C-C

** For Limits of Stage I Removal, See Construction Staging, Sheet No. 2

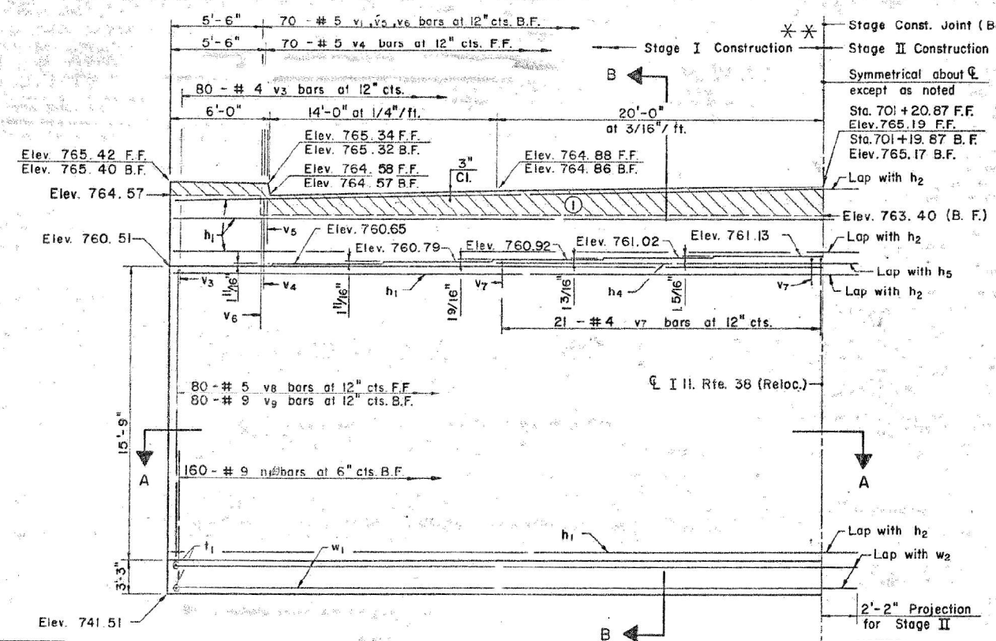

NOTES:

For detail of pipe thru abut. footing, see Sht. #17.

F. F. Refers to Front Face of Backwall.

B. F. Refers to Back Face of Backwall at Approach Slab Notch.

ELEVATION

STAGE I SHOWN
STAGE II SIMILAR

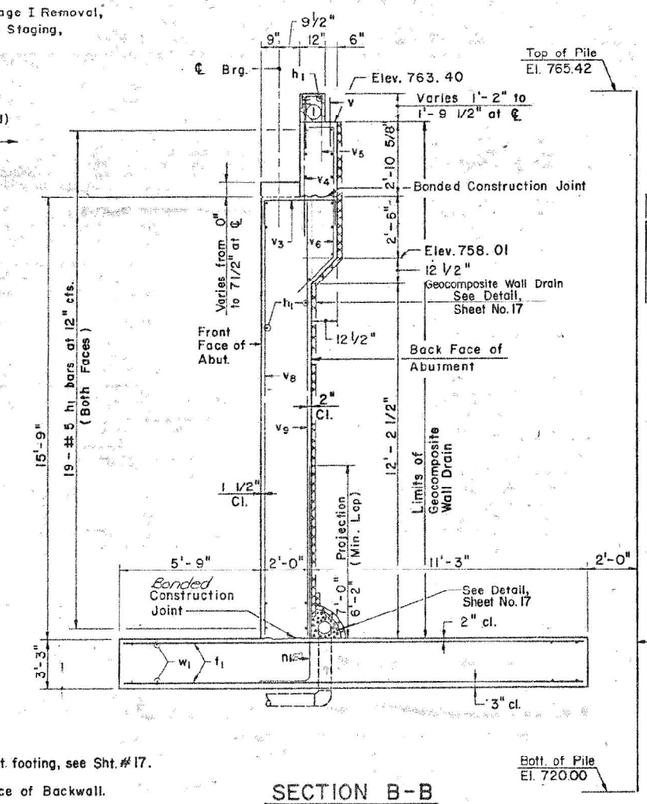

SECTION B-B

Maximum Design Soil Bearing Pressure = 1.95 T.S.F.

BILL OF MATERIAL

Bar	No.	Size	Length	Shape
h1	39	#5	42'-0"	
h2	39	#5	39'-10"	
h3	2	#5	5'-8"	
h4	2	#5	22'-2"	
h5	2	#5	20'-0"	
n1	160	#9	12'-0"	
t1	288	#9	18'-6"	
v	69	#5	2'-0"	
v3	80	#4	4'-9"	
v4	80	#5	6'-6"	
v5	80	#4	6'-3"	
v6	70	#5	8'-0"	
v7	42	#4	4'-3"	
v8	80	#5	15'-6"	
v9	80	#9	15'-6"	
v10	10	#5	9'-4"	
w1	38	#5	42'-0"	
w2	38	#5	39'-10"	
Reinforcement Bars			Lbs.	32,530
Class X Concrete			Cu. Yds.	300
Class X Concrete Superstructure			Cu. Yds.	4
Reinf. Bars (Epoxy Coated)			Lbs.	6,530

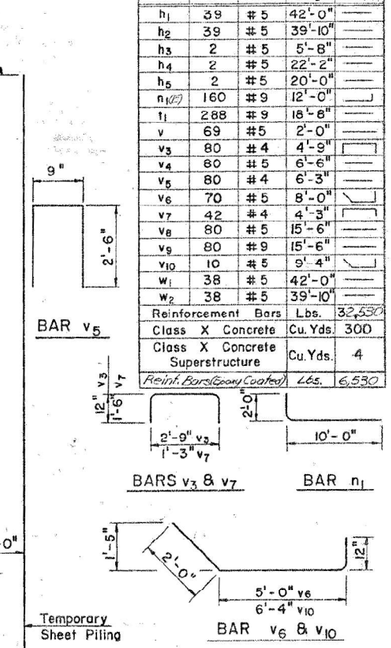

WEST ABUTMENT
ROOSEVELT ROAD
F.A.P. 567 ILL. RTE. 38
DUPAGE COUNTY
STA. 701 + 62.41

DESIGNED	MVM
CHECKED	SRS
DRAWN	SWF
CHECKED	MVM

STATE OF ILLINOIS
DEPARTMENT OF TRANSPORTATION

** EPOXY GROUT 4-5/8"Ø x 7-1/2" ANCHOR BOLTS INTO 7/8"Ø x 7" DRILLED HOLES AT EACH POST LOCATION ON EXISTING WALLS. SEE ANCHOR BOLT DETAILS, SHEET #18, FOR LAYOUT. COST INCIDENTAL TO PEDESTRIAN RAILING, 4'-0", SEE SPECIAL PROVISION FOR EPOXY GROUTED ANCHORS.

ROUTE NO.	SECTION	COUNTY	TOTAL SHEETS	SHEET NO.
F.A.P.567	X	DUPAGE	106	89
FED. ROAD DIST. NO. 7	ILLINOIS	FED. AID PROJECT		

SHEET NO. 15
18 SHEETS

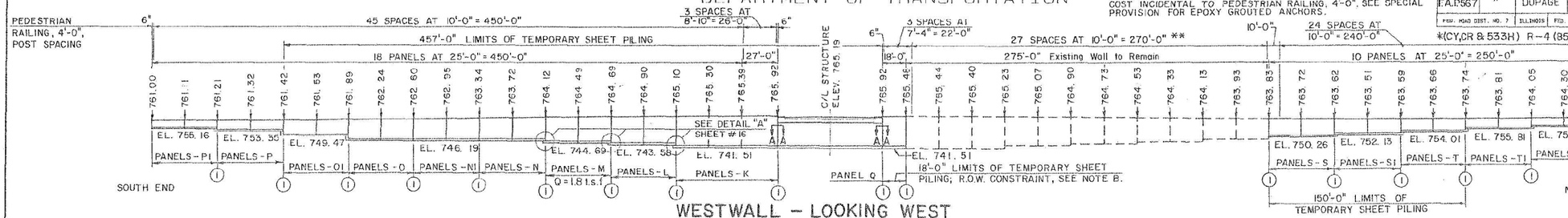

WESTWALL - LOOKING WEST

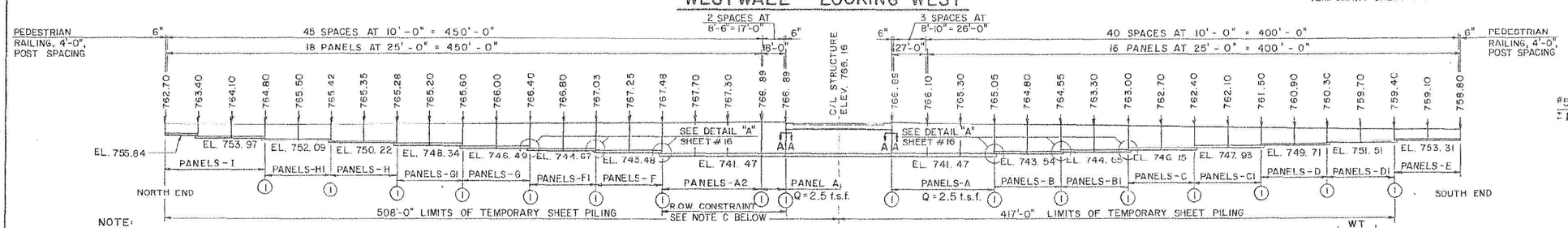

EASTWALL - LOOKING EAST

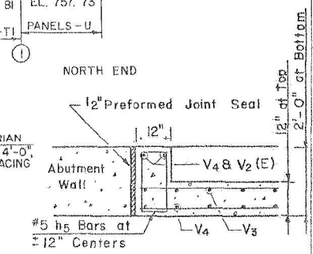

SECTION A-A

NOTE:

ALLOWABLE SOIL PRESSURE (Q) = 2 TONS PER SQUARE FOOT UNLESS OTHERWISE NOTED.
(Panel M - Westwall)
(Panels A & A1 - Eastwall)

NOTE B:

R.O.W. line and heel of existing Westwall footing coincide. Drive Temporary Sheet Piling to miss existing footing.

NOTE C:

Limited R.O.W. clearance. Drive Temporary Sheet Piling at the R.O.W. line.

(1) 1/2" EXPANSION JOINT IN RETAINING WALL

Front face of Retaining walls will be built 40' offset from and parallel to the centerline of Bryant Ave.

WALL DIMENSIONS AND REINFORCEMENT LAYOUT

WESTWALL

Panel	K	L	M	N / N1	O / O1	P / P1	Q		S / S1	T / T1	U
H_{MIN}	20.84'	19.11'	17.68'	14.91'	10.45'	4.84'	21.47'	Existing	10.38'	6.93'	5.32'
H_{MAX}	21.66'	19.52'	18.25'	16.43'	14.91'	7.07'	21.91'	Wall	12.57'	8.73'	5.81'
WT	1.00'	1.00'	1.00'	1.00'	1.00'	1.00'	1.00'	to	1.00'	1.00'	1.00'
TB	4.00'	3.25'	3.25'	2.75'	2.50'	1.00'	6.00'	Remain	2.50'	1.50'	1.00'
WB	2.00'	2.00'	2.00'	1.50'	1.50'	1.00'	2.00'		1.50'	1.00'	1.00'
HB	9.00'	7.00'	6.50'	6.00'	5.50'	3.25'	▲6.25'		4.50'	3.50'	2.75'
FT	2.75'	2.00'	1.75'	1.50'	1.50'	1.00'	2.50'		1.00'	1.00'	1.00'
t_1	#7	#7	#6	#5	#5	#4	#8		#5	#5	#4
t_2	#9	#8	#7	#7	#7	#5	#8		#6	#6	#4
S_1	6"	6"	6"	6"	6"	12"	6"		6"	12"	12"
v_1(E)	#9	#8	#7	#7	#6	#5	#9		#5	#5	#5
S_2	6"	6"	6"	6"	6"	12"	6"		6"	12"	12"
v_3	#9	#8	#7	#7	#6	#5	#9		#5	#5	#5
L_1	7.00'	5.50'	4.25'	5.25'	7.25'	4.67'	6.75'		4.25'	4.00'	5.08'
L_2	3.00'	2.75'	2.75'	3.75'	6.75'	4.67'	2.75'		4.25'	4.00'	5.08'

▲ R.O.W. Constraint

EASTWALL

Panel	A	B / B1	C / C1	D / D1	E	F / F1	G / G1	H / H1	I	A1	A2
H_{MIN}	20.58'	16.35'	12.07'	6.89'	4.49'	18.98'	15.11'	11.21'	5.86'	22.42'	22.42'
H_{MAX}	22.42'	19.51'	15.35'	10.79'	5.09'	21.25'	18.16'	13.70'	9.83'	22.42'	23.23'
WT	1.00'	1.00'	1.00'	1.00'	1.00'	1.00'	1.00'	1.00'	1.00'	1.00'	1.00'
TB	4.50'	3.25'	2.50'	1.50'	1.00'	3.75'	3.25'	2.50'	1.50'	4.50'	5.00'
WB	2.00'	2.00'	1.50'	1.00'	1.00'	2.00'	2.00'	1.50'	1.00'	2.00'	2.00'
HB	8.00'	7.00'	5.50'	4.75'	2.75'	9.00'	6.50'	5.00'	4.00'	8.00'	9.00'
FT	3.00	2.00'	1.50'	1.00'	1.00'	2.75'	1.75'	1.50'	1.00'	3.00'	3.00'
t_1	#7	#7	#5	#5	#4	#8	#6	#5	#5	#7	#7
t_2	#8	#8	#7	#6	#4	#9	#7	#6	#6	#8	#8
S_1	6"	6"	6"	6"	12"	6"	6"	6"	12"	6"	6"
v_1(E)	#9	#8	#6	#7	#5	#8	#7	#7	#6	#9	#9
S_2	6"	6"	6"	12"	12"	6"	6"	12"	12"	6"	6"
v_3	#9	#8	#6	#7	#5	#8	#7	#7	#6	#9	#9
L_1	8.00'	8.08'	6.00'	6.75'	3.00'	7.19'	6.75'	6.00'	5.75'	6.25'	7.00'
L_2	4.00'	5.25'	5.50'	6.75'	3.00'	4.50'	5.25'	4.50'	5.75'	2.25'	3.00'

Design Soil Bearing Pressure = 2 t.s.f. for all Panels except:
Panel M = 1.74 t.s.f.
Panel A = 2.17 t.s.f.
Panel A1 = 2.17 t.s.f.

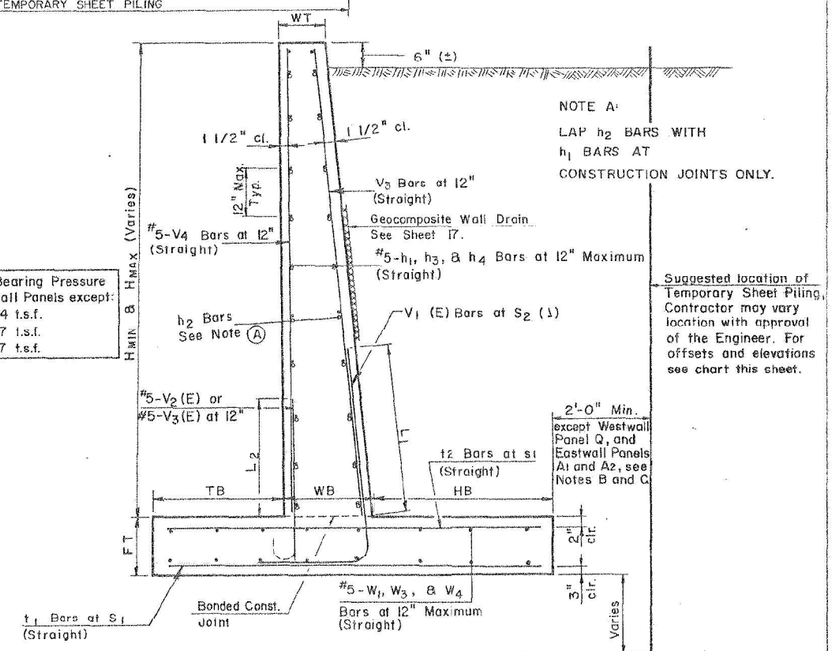

NOTE A:

LAP h_2 BARS WITH h_1 BARS AT CONSTRUCTION JOINTS ONLY.

Suggested location of Temporary Sheet Piling. Contractor may vary location with approval of the Engineer. For offsets and elevations see chart this sheet.

TYPICAL RETAINING WALL SECTION

TEMPORARY SHEET PILING OFFSETS AND ELEVATIONS

WESTWALL

Panel	K	L	M	N▲ / N1	O▲ / O1	P / P1	Q	Exist. Walls	S / S1	T / T1	U
Offset from Existing ℄	35.00'	33.00'	32.50'	31.50'	31.00'	—	31.00'	—	30.00'	8.50'	—
Top of Pile Elevation	766	765	765	764	763	—	766	—	764	764	—
Bott. of Pile Elevation	719	724	726	730	731	—	719	—	738	745	—

EASTWALL

Panel	A	B / B1	C / C1	D / D1	E / E1	F / F1	G / G1	H / H1	I	A1▲	A2▲
Offset from Existing ℄	71.00	69.00'	67.00'	65.75'	—	71.00'	68.50'	66.50'	65.00'	70.00'	70.00'
Top of Pile Elevation	767	765	763	762	—	768	767	766	765	767	768
Bott. of Pile Elevation	718	724	730	739	—	722	728	736	744	718	717

DESIGNED	SRS
CHECKED	MVM
DRAWN	BSB
CHECKED	MVM

RETAINING WALLS
ROOSEVELT ROAD
F.A.P. 567 ILL. RTE. 38
DUPAGE COUNTY
STA. 701 + 62.41

022-0163

ROUTE NO.	SECTION	COUNTY	TOTAL SHEETS	SHEET NO.
F.A.P. ROUTE 567	CY, CR & 533H) R-4(85)	DUPAGE	50	35
PROJ. NUMBER CONT. NO. 7	ILLINOIS	FED. AID PROJECT		

Existing Structure: Structure Number 022-0163 built as F.A.P. Route 567 Sec. (CY, CR & 533H) R-4(85) in 1988. The superstructure consists of a R.C. deck 82'-8½" long by 80'-0" wide supported by single span W36x232 rolled beams, the substructure consists of closed abutments.
Traffic shall be maintained during constr. by moving the westbound lanes to the south.
Salvage the existing Pedestrian Railing(Std. R-28) on the North Parapet.

STATE OF ILLINOIS
DEPARTMENT OF TRANSPORTATION

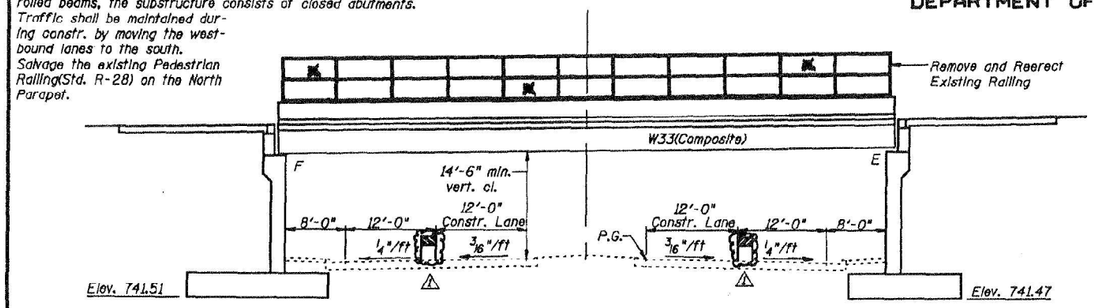

ELEVATION

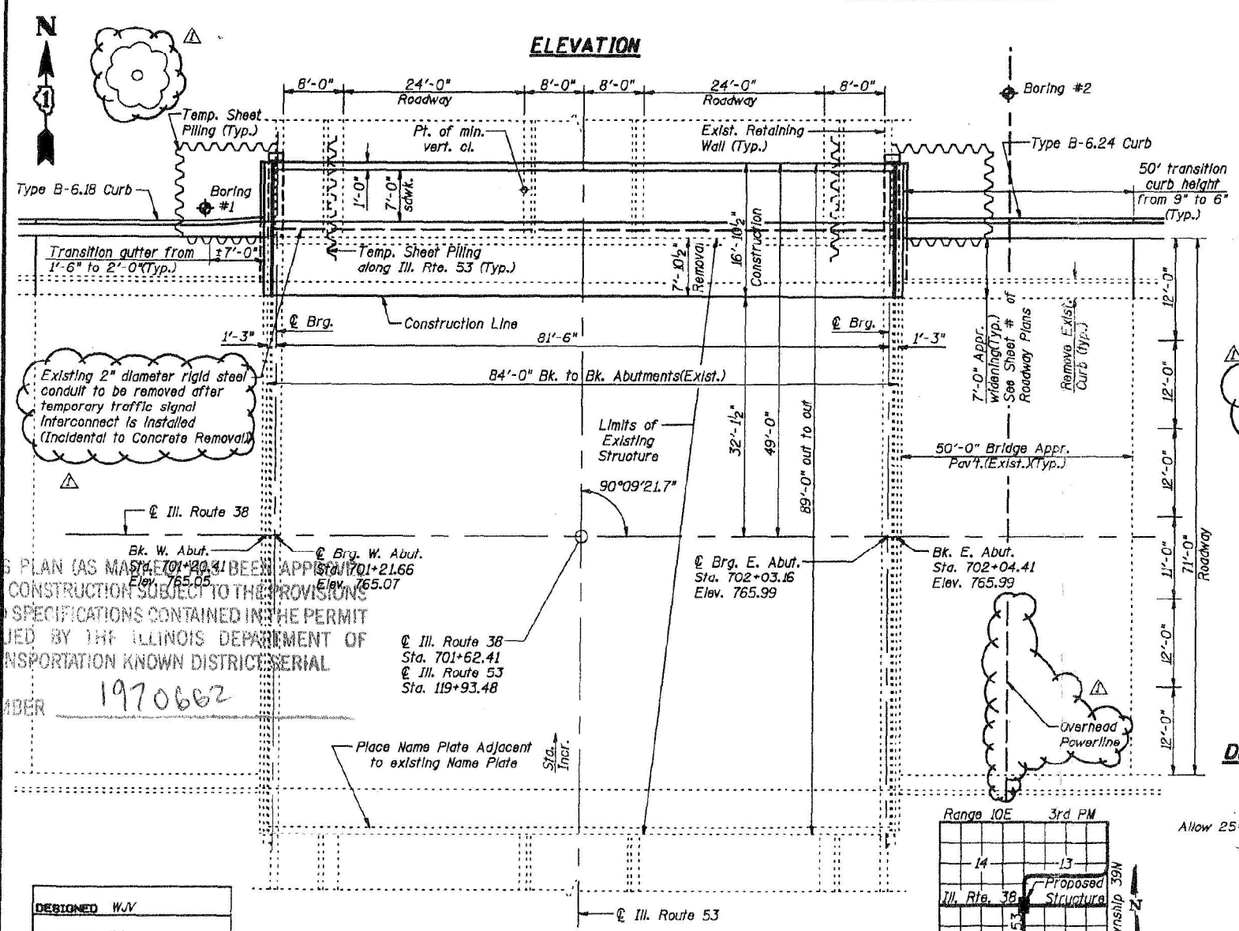

THIS PLAN (AS MARKED) HAS BEEN APPROVED FOR CONSTRUCTION SUBJECT TO THE PROVISIONS AND SPECIFICATIONS CONTAINED IN THE PERMIT ISSUED BY THE ILLINOIS DEPARTMENT OF TRANSPORTATION KNOWN DISTRICT SERIAL NUMBER 1970662

DESIGNED	WJV
CHECKED	JPS
DRAWN	WJV
CHECKED	JPS

REVISIONS
Review Comments 9/12/97

PLAN
N.T.S.

Bench Mark: Box cut in N.E. corner of Retaining wall opposite Sta. 111+42.50 and 51.7' West off survey baseline, IL Rte 53. Elev. 763.43

Bench Mark: Cut square at the N.E. Abutment Wall of IL. RTE. 53 and Roosevelt Road. Elev. 776.81

STATION 701 + 62.41
WIDENED 1998 BY
PRIVATE DEVELOPER
F.A.P. 567
SEC. (CY,CR&533H) R-4(85)
LOADING HS20
STR. NO. 022-0163

NAME PLATE
See Std. 2113

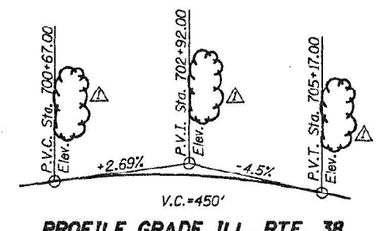

PROFILE GRADE ILL. RTE. 38

Top of slab elevations shown on the Elevation Sheet are based on a line of survey shots taken on top of deck over the second beam in from existing North edge of bridge.

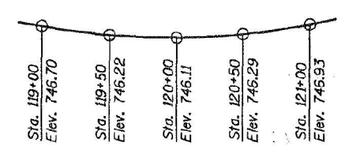

PROFILE GRADE ILL. RTE. 53

DESIGN SPECIFICATIONS
AASHTO 1996

LOADING HS20-44
Allow 25#/sq. ft. for future wearing surface.

DESIGN STRESSES
FIELD UNITS
f'_c = 3,500 psi
f_y = 60,000 psi (reinf.)
f_y = 36,000 psi (M270 Grade 36)

SEISMIC DATA
Seismic Performance Category (SPC) = A
Bedrock Acceleration Coefficient (A) = 0.04
Site Coefficient (S) = 1.0

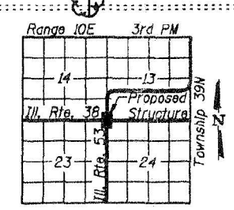

LOCATION SKETCH

Fasteners shall be high strength bolts. Bolts ¾" ϕ, open holes 15/16" ϕ, unless otherwise noted.

Calculated weight of Structural Steel = 35,430

The inorganic zinc rich primer / Acrylic / Acrylic Paint System shall be used for shop and field painting of new structural steel except where otherwise noted. The color of the acrylic finish shall be light grey, Munsell No. 10YR 7/1, except for the north face and bottom flange of the exterior beam which shall be redish brown, Munsell No. 2.5YR 3/4. See Special Provision "Cleaning and Painting (New) Metal Structures".

Field welding of construction accessories will not be permitted to the bottom flange of beams or girders nor to the top flange for a distance equal to one-fourth the span length each way from the pier supports. Field welding in other areas will be permitted only when approved by the Engineer.

Anchor bolts shall be set before bolting diaphragms over supports.

The main load carrying member components subject to tensile stress shall conform to the Supplemental Requirements for Notch Toughness Zone 2. These components are (the wide flange beams) (the tension flanges, webs) and all splice plate material except fill plates.

Reinforcement bars shall conform to the requirements of AASHTO M-31, M-42 or M-53 Grade 60.

The back face of Closed Abutments shall be waterproofed according to Article 503.18 of the Standard Specifications.

Plan dimensions and details relative to existing structure have been taken from existing plans and are subject to nominal construction variations. It shall be the Contractor's responsibility to verify such dimensions and details in the field and make necessary approved adjustments prior to construction or ordering of materials. Such variations shall not be cause for additional compensation for a change in the scope of the work, however, the Contractor will be paid for the quantity actually furnished at the unit price bid for the work.

Prior to pouring the new concrete for the deck, all loose rust, loose mill scale and all other loose, detrimental foreign material shall be removed from the portions of flanges of stringers (girders) in contact with concrete. The removal shall be accomplished in accordance with the requirements of the SSPC Surface Preparation Specifications SP-3 for power tool cleaning or SP-2 for hand tool cleaning. Cost shall be incidental to Contract.

TOTAL BILL OF MATERIAL

ITEM	UNIT	SUPER	SUB	TOTAL
Concrete Removal	Cu. Yd.	37.7	50.7	88.4
Structure Excavation	Cu. Yd.		326	326
Preformed Joint Seal 2½"	Foot	18		18
Preformed Joint Seal 4"	Foot	18		18
Concrete Superstructure	Cu. Yd.	62.8		62.8
Protective Coat	Sq. Yd.	182		182
Elastomeric Bearing Assembly Type I	Each	2		2
Concrete Structures	Cu. Yd.		69.7	69.7
Furnishing and Erecting Structural Steel	L.S.	1		1
Stud Shear Connectors	Each	264		264
Reinforcement Bars	Pound		5030	5030
Reinforcement Bars, Epoxy Coated	Pound	9850	4880	14730
Temporary Sheet Piling	Sq. Ft.		2554	2554
Bridge Deck Grooving	Sq. Yd.	73		73
Protective Shield	Sq. Yd.	113		113
Remove and Reerect Existing Railing	Each	1		1
Geocomposite Wall Drain	Sq. Yd.		57	57
Pipe Underdrain Perf. Cor. Steel Pipe 6"	Foot		26	26
Remove and Reerect Existing Railing, Special	Each			2

STATE OF ILLINOIS
WILLIAM J. VEGRZYN
4983
HANOVER PARK, IL
LICENSED STRUCTURAL ENGINEER
Expires 11-30-98

GENERAL PLAN AND ELEVATION
ILL. RTE. 38 OVER ILL. RTE. 53
F.A.P. 567
SECTION (CY, CR & 533H) R-4(85)
DUPAGE COUNTY
STATION 701 +62.41
STRUCTURE NUMBER 022-0163

PROJECT NO.	DIRECTION	COUNTY	TOTAL SHEETS	SHEET NO.
D.P.D. F.A.P. PROJECT 567	NOT ON A SIGNED SH-ROUTE	DUPAGE	50	39
FOR PROJ. DWG. NO. 7	S.I. BRIDGE	FED. AID PROJECT		

STATE OF ILLINOIS
DEPARTMENT OF TRANSPORTATION

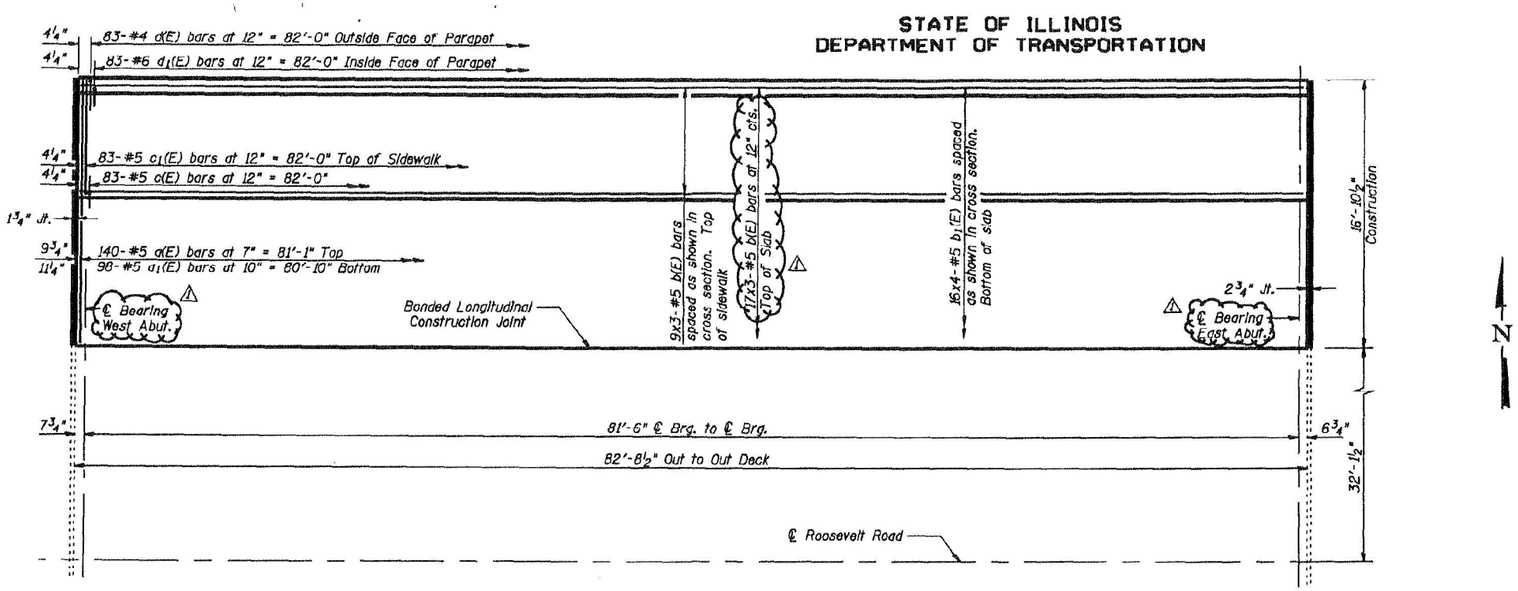

PARTIAL PLAN

MINIMUM BAR LAP

#5 = 2'-2"

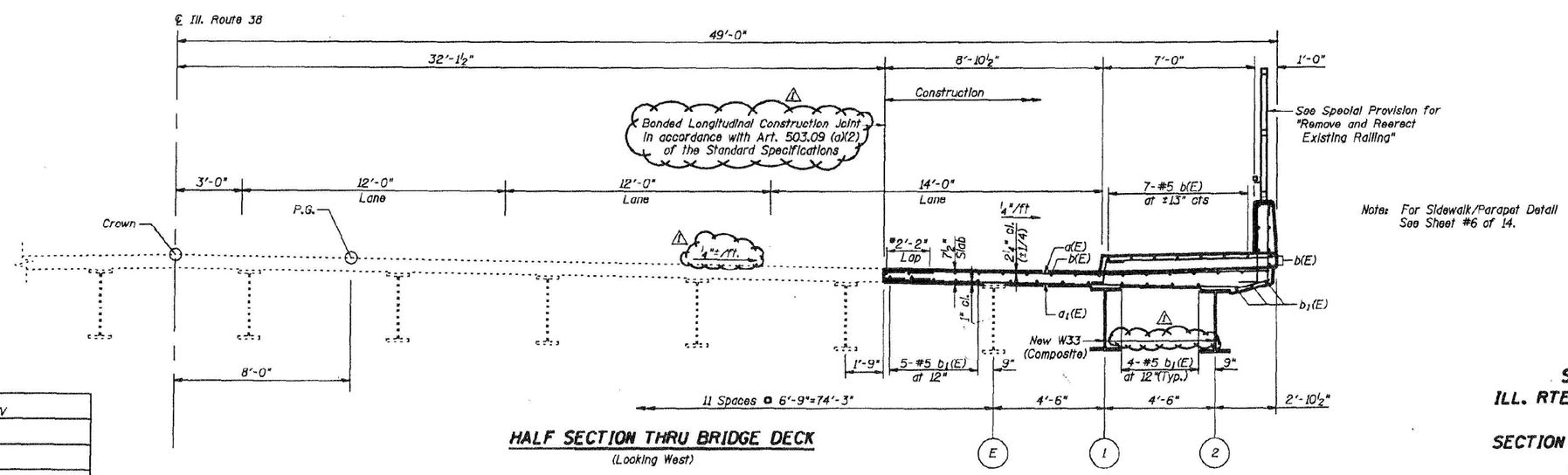

HALF SECTION THRU BRIDGE DECK

(Looking West)

*lap to the existing transverse reinforcement (see sheet #2 of 14)

DESIGNED	WJV
CHECKED	JPS
DRAWN	WJV
CHECKED	JPS

REVISIONS

1 Review Comments 9/12/97

SUPERSTRUCTURE
ILL. RTE. 38 OVER ILL. RTE. 53
F.A.P. 567
SECTION (CY. CR & 533H) R-4(85)
DUPAGE COUNTY
STATION 701 +62.41
STRUCTURE NUMBER 022-0163

MODEL: Default
FILE NAME: pw://mb-us-pw.bentley.com:mb-us-pw-03/Documents/Chicago_IL/01_Projects/D1_IDOT_Var_DEserve_PTB208_005/W01 - 1982943.0 Deliverables/3.3 CADD Data/Sheets/0220163-62T17-039-Existing Bridge Plans 11 of 16.dgn

Michael Baker INTERNATIONAL

USER NAME = Connor.Liss	DESIGNED MLK	REVISED -	
	CHECKED JMK	REVISED -	
PLOT SCALE =	DRAWN JHJ	REVISED -	
PLOT DATE = 8/9/2024	CHECKED MLK/JMK	REVISED -	

STATE OF ILLINOIS
DEPARTMENT OF TRANSPORTATION

EXISTING BRIDGE PLANS (FOR REFERENCE ONLY)
STRUCTURE NO. 022-0163

SHEET S-39 OF S-44 SHEETS

F.A.P. RTE.	SECTION	COUNTY	TOTAL SHEETS	SHEET NO.
0347	0347 22 BJ3	DUPAGE	98	83
		CONTRACT NO. 62T17		
		ILLINOIS	FED. AID PROJECT	

8/9/2024 3:22:04 PM

STATE OF ILLINOIS
DEPARTMENT OF TRANSPORTATION

ROUTE NO.	SECTION	COUNTY	TOTAL SHEETS	SHEET NO.
F.A.P. ROUTE 99	0347 22 BJ3	DUPAGE	50	40

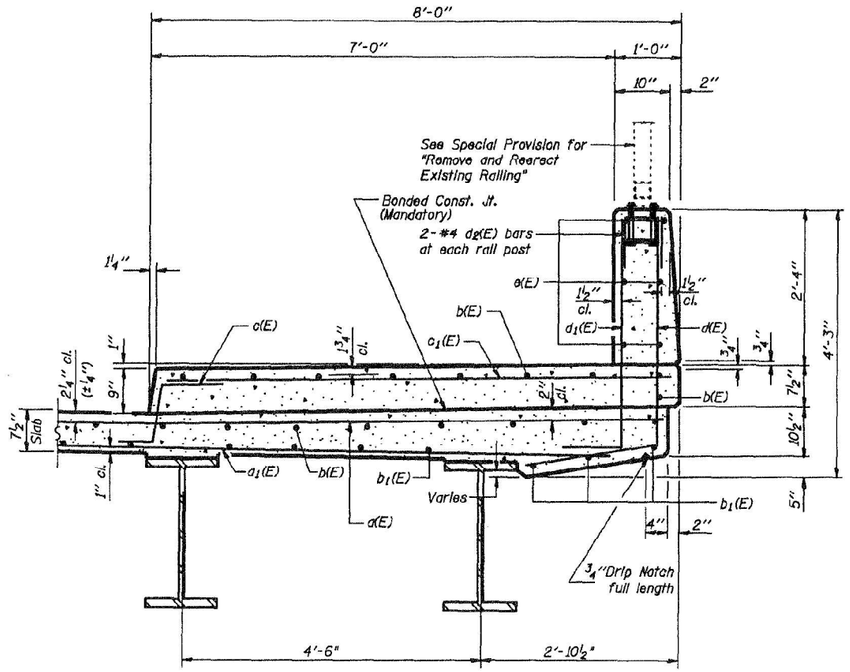

SECTION THRU SIDEWALK

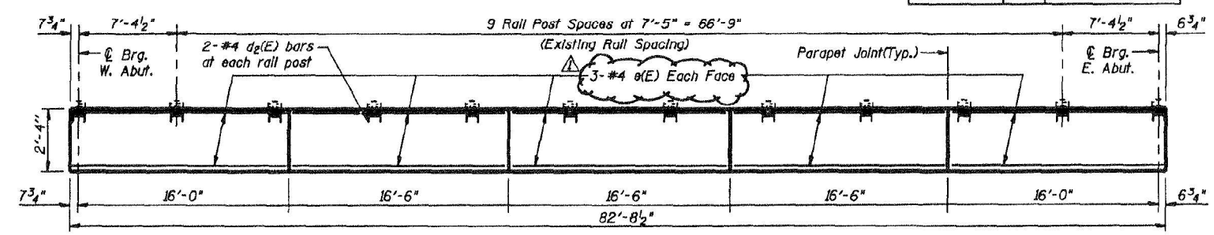

PARAPET ELEVATION

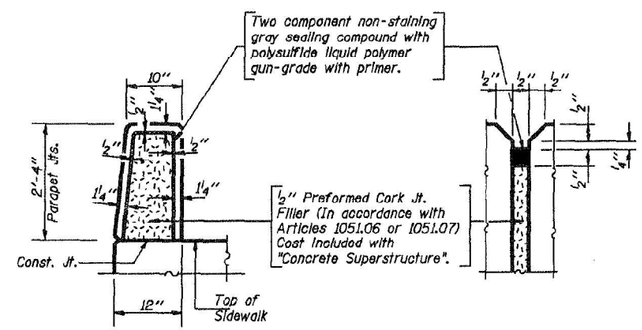

PARAPET JOINT DETAILS

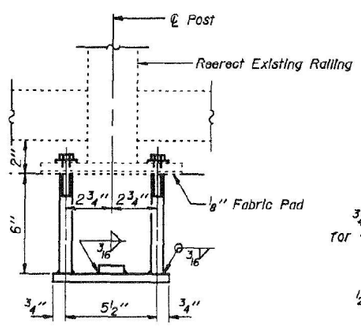

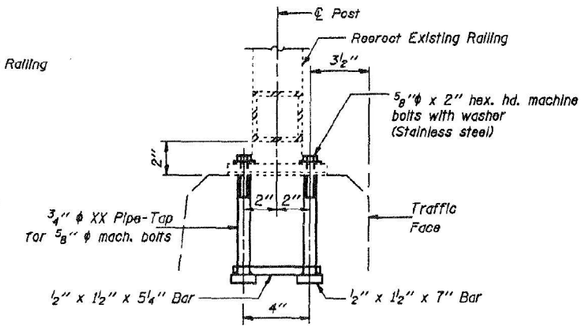

ANCHOR BOLT DETAILS
Cost Included with "Remove and Reerect Existing Railing"

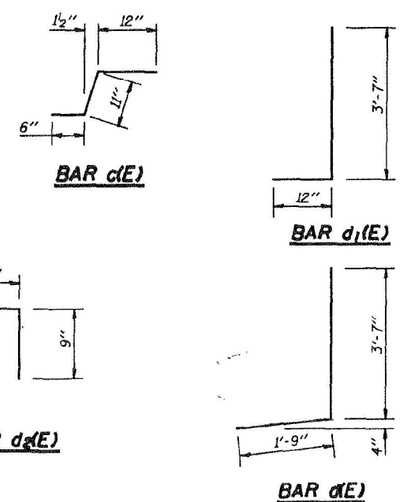

SUPERSTRUCTURE BILL OF MATERIAL

Bar	No.	Size	Length	Shape
a(E)	140	#5	16'-5"	
a1(E)	98	#5	15'-8"	
b(E)	78	#5	29'-0"	
b1(E)	64	#5	22'-3"	
c(E)	83	#5	2'-5"	
c1(E)	83	#5	7'-8"	
d(E)	83	#4	5'-4"	
d1(E)	83	#6	4'-7"	
d2(E)	24	#4	2'-0"	
e(E)	30	#4	16'-3"	
Remove and Reerect Existing Railing			Each	1
Reinforcement Bars, Epoxy Coated			Pound	9850
Concrete Superstructure			Cu. Yd.	62.8

DESIGNED	WJV
CHECKED	JPS
DRAWN	WJV
CHECKED	JPS

REVISIONS
1 Review Comments 9/12/97

SUPERSTRUCTURE DETAILS
ILL. RTE. 38 OVER ILL. RTE. 53
F.A.P. 567
SECTION (CY, CR & 533H) R-4(85)
DUPAGE COUNTY
STATION 701 +62.41
STRUCTURE NUMBER 022-0163

ROUTE NO.	SECTION	COUNTY	TOTAL SHEETS	SHEET NO.
U. S. 34 / F. A. ROUTE 42	STA. 101 + 00 & 102+00 R-4(85)	DUPAGE	50	41
FED. ROAD DIST. NO. 7	ILLINOIS	FED. AID PROJECT-		

STATE OF ILLINOIS
DEPARTMENT OF TRANSPORTATION

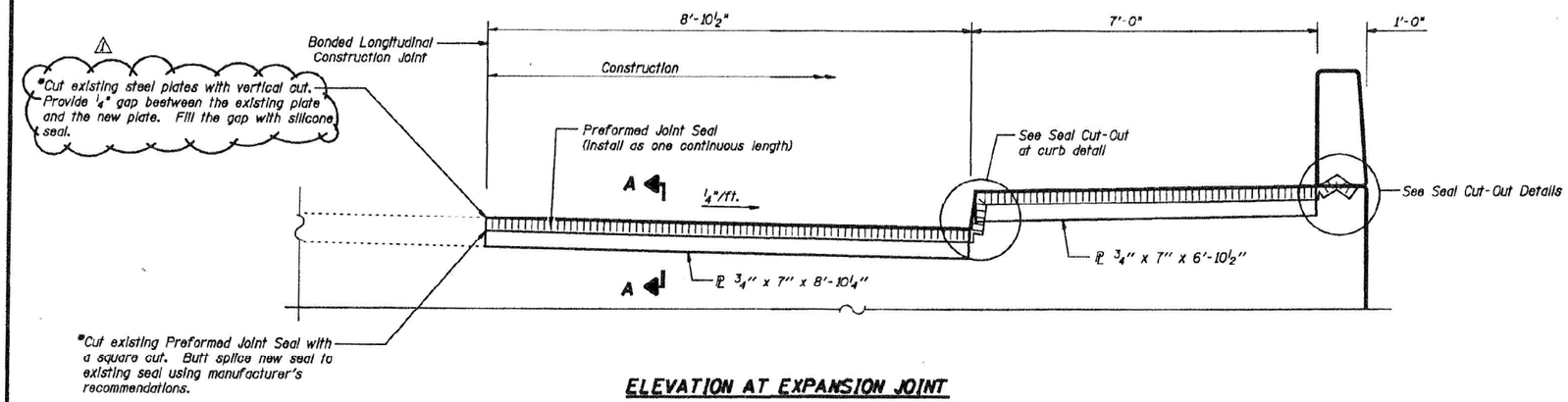

ELEVATION AT EXPANSION JOINT

Looking West

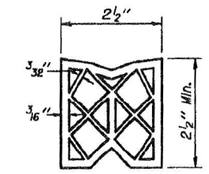

PREFORMED JOINT SEAL (2½")

(West Abut.)

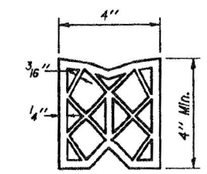

PREFORMED JOINT SEAL (4")

(East Abut.)

BILL OF MATERIAL

ITEM	UNIT	QUANTITY
Preformed Joint Seal (2½")	Foot	18
Preformed Joint Seal (4")	Foot	18

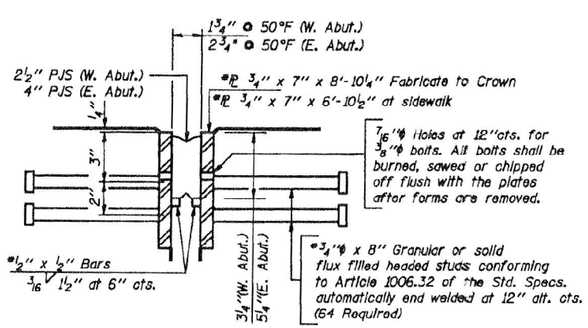

SECTION A-A

*Cost Included with "Furnishing and Erecting Structural Steel"

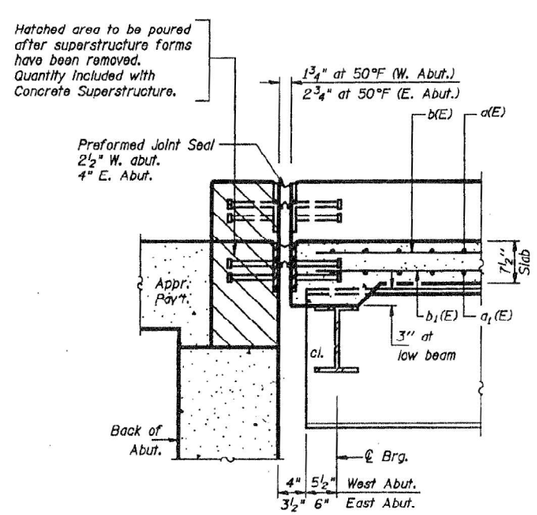

DETAIL OF EXPANSION JOINTS

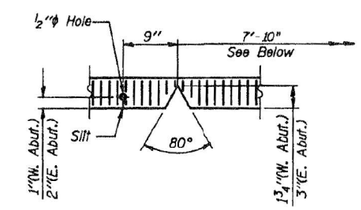

SEAL CUT-OUT AT CURB

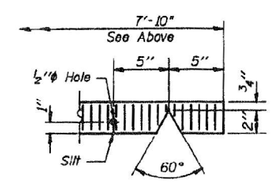

SEAL CUT-OUT (2½")

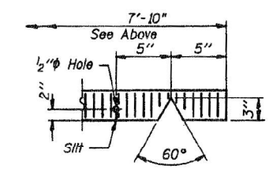

SEAL CUT-OUT (4")

DESIGNED	WJV
CHECKED	JPS
DRAWN	WJV
CHECKED	JPS

REVISIONS

⚠ Review Comments 9/12/97

SUPERSTRUCTURE DETAILS
ILL. RTE. 38 OVER ILL. RTE. 53
F.A.P. 567
SECTION (CY, CR & 533H) R-4(85)
DUPAGE COUNTY
STATION 701 +62.41
STRUCTURE NUMBER 022-0163

STATE OF ILLINOIS
DEPARTMENT OF TRANSPORTATION

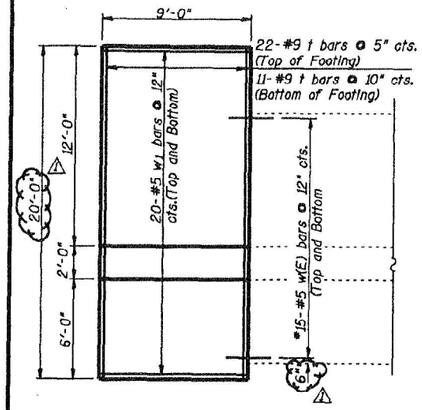

FOOTING PLAN

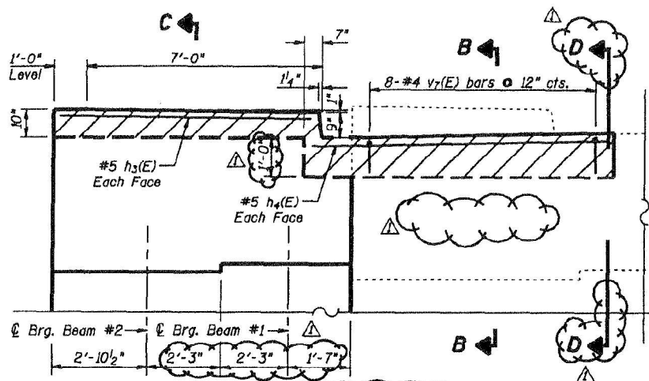

BACKWALL ELEVATION

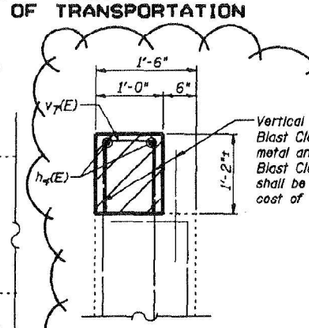

SECTION D-D

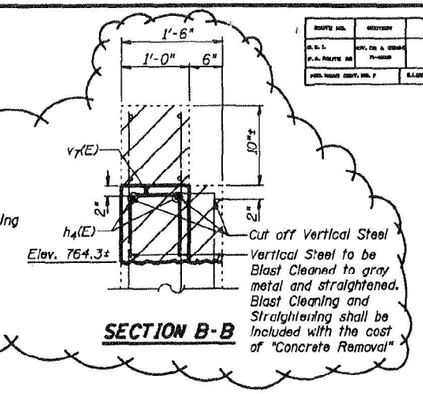

SECTION B-B

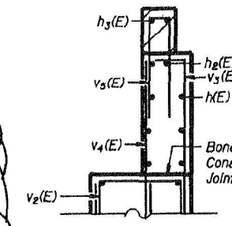

SECTION C-C

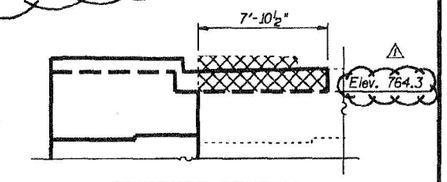

CONCRETE REMOVAL

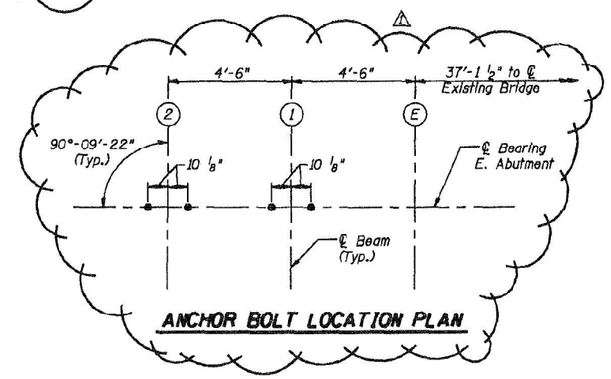

ANCHOR BOLT LOCATION PLAN

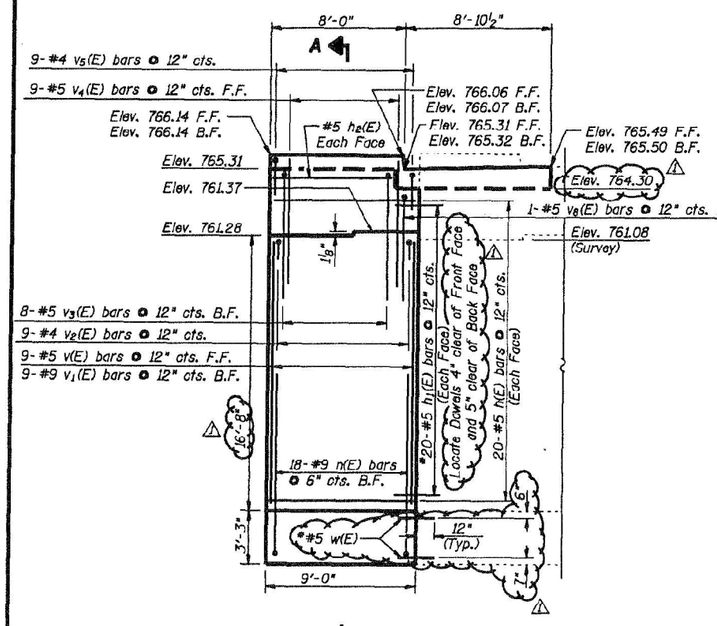

A

ELEVATION

*All bars shall be epoxy grouted a minimum 12" into existing concrete in accordance with Section 584 of the Standard Specifications.

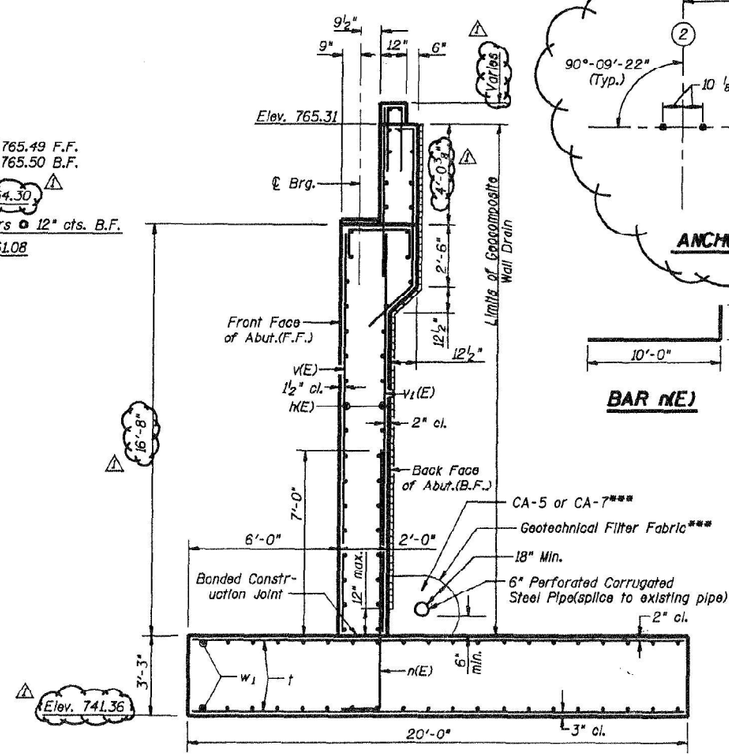

***Cost Included with "Pipe Underdrain Perforated Corrugated Steel Pipe 6"

SECTION A-A

The equivalent Uniform Applied Bearing Pressure = 3.7 K.S.F.

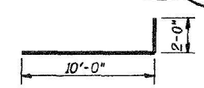

BAR n(E)

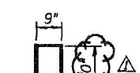

BAR v7(E)

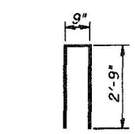

BAR v5(E)

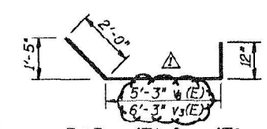

BAR v3(E) & v8(E)

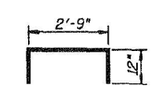

BAR v2(E)

NOTES

Cross hatched area indicates "Concrete Removal".
Hatched area to be poured after superstructure forms have been removed. Form top surface to match superstructure. Concrete quantity is billed with "Concrete Superstructure" see sheet #6 of 14.
All surfaces where new concrete is cast against existing concrete shall be Bonded Construction Joints, in accordance with Article 503.09(a)(2) of the Standard Specifications.
Space reinforcement in cap to miss anchor bolts.
Reinforcement bars designated (E) shall be epoxy coated.
For anchor bolt installation details see sheet #10 of 14.

ROUTE NO.	SECTION	COUNTY	TOTAL SHEETS	SHEET NO.
U.S. 6 F.A. ROUTE 66	CH. CR. & SECTION 75-00000	DUPAGE	50	45
FED. ROAD DIST. NO. 7	ILLINOIS	FED. AID PROJECT		

BILL OF MATERIAL

Bar	No.	Size	Length	Shape
h(E)	40	#5	8'-9"	
h1(E)	40	#5	2'-0"	
h2(E)	2	#5	7'-2"	
h3(E)	2	#5	1'-8"	
h4(E)	2	#5	9'-2"	
n(E)	18	#9	12'-0"	
t	33	#9	19'-9"	
v(E)	9	#5	16'-6"	
v1(E)	9	#9	16'-3"	
v2(E)	9	#4	4'-9"	
v3(E)	8	#5	9'-3"	
v4(E)	9	#5	6'-6"	
v5(E)	9	#4	6'-3"	
v7(E)	8	#4	2'-5"	
v8(E)	1	#5	8'-3"	
w(E)	30	#5	2'-0"	
w1	40	#5	8'-9"	
Concrete Structures			Cu. Yd.	35.7
Reinforcement Bars, Epoxy Coated			Pound	2220
Reinforcement Bars			Pound	2580
Geocomposite Wall Drain			Sq. Yd.	29
Pipe Underdrain Perf. Corrug. Steel Pipe 6"			foot	13
Concrete Removal			Cu. Yd.	0.7
Structure Excavation			Cu. Yd.	172

EAST ABUTMENT
ILL. RTE. 38 OVER ILL. RTE. 53
F.A.P. 567
SECTION (CY, CR & 533H) R-4(85)
DUPAGE COUNTY
STATION 701 +62.41
STRUCTURE NUMBER 022-0163

DESIGNED	WJV
CHECKED	JPS
DRAWN	WJV
CHECKED	JPS

REVISIONS

1 Review Comments 9/12/97

Michael Baker INTERNATIONAL

USER NAME = Connor.Liss	DESIGNED	MLK	REVISED	-	
	CHECKED	JMK	REVISED	-	
PLOT SCALE =	DRAWN	JHJ	REVISED	-	
PLOT DATE = 8/9/2024	CHECKED	MLK/JMK	REVISED	-	

STATE OF ILLINOIS
DEPARTMENT OF TRANSPORTATION

EXISTING BRIDGE PLANS (FOR REFERENCE ONLY)
STRUCTURE NO. 022-0163

SHEET S-42 OF S-44 SHEETS

F.A.P. RTE.	SECTION	COUNTY	TOTAL SHEETS	SHEET NO.
0347	0347 22 BJ3	DUPAGE	98	86
		CONTRACT NO. 62T17		
		ILLINOIS	FED. AID PROJECT	

MODEL: Default
FILE NAME: pw://mb-us-pw.bentley.com:mb-us-pw-03\Documents\Chicago_IL\01_Projects\D1_IDOT_Var_DEservs_PTB206_005\W01 - 19829413.0 Deliverables\3.3 CADD Data\Sheets\0220163-62T17-042-Existing Bridge Plans 14 of 16.dgn

8/9/2024 3:22:47 PM

STATE OF ILLINOIS
DEPARTMENT OF TRANSPORTATION

ROUTE NO.	SECTION	COUNTY	TOTAL SHEETS	SHEET NO.
D.B.I. F.A. ROUTE 63	0347-0H & 533H R-4(85)	DUPAGE	50	46
FED. ROAD DIST. NO. 9	ILLINOIS	FED. AID PROJECT		

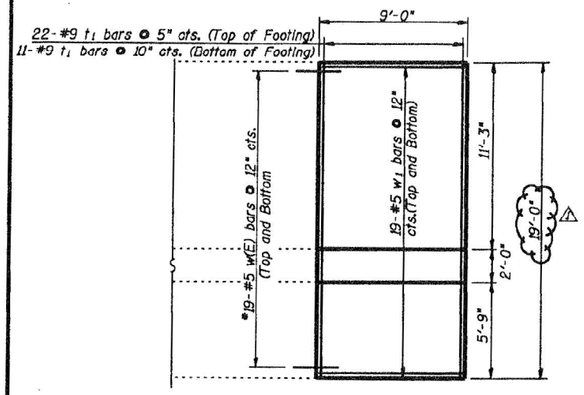

FOOTING PLAN

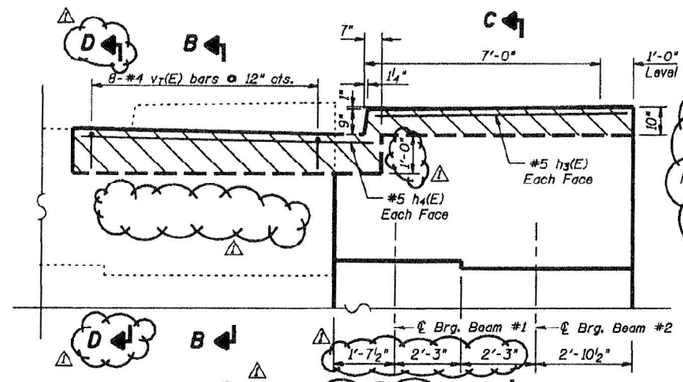

BACKWALL ELEVATION

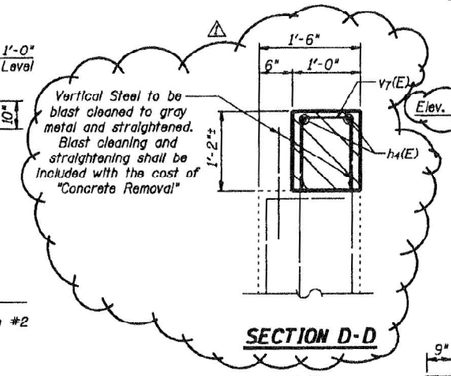

SECTION D-D

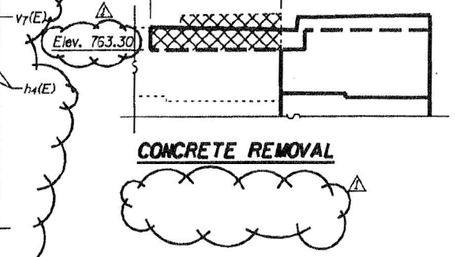

CONCRETE REMOVAL

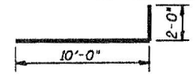

BAR n(E)

BAR v7(E)

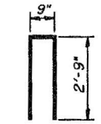

BAR v5(E)

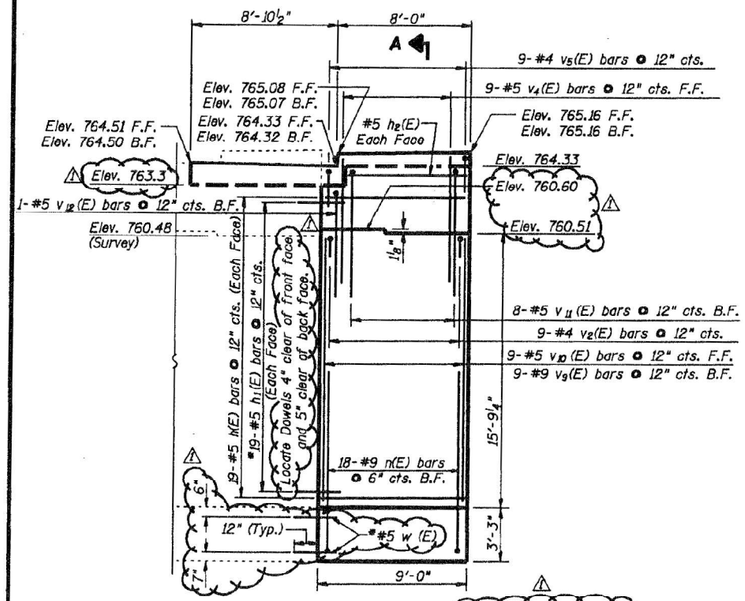

ELEVATION

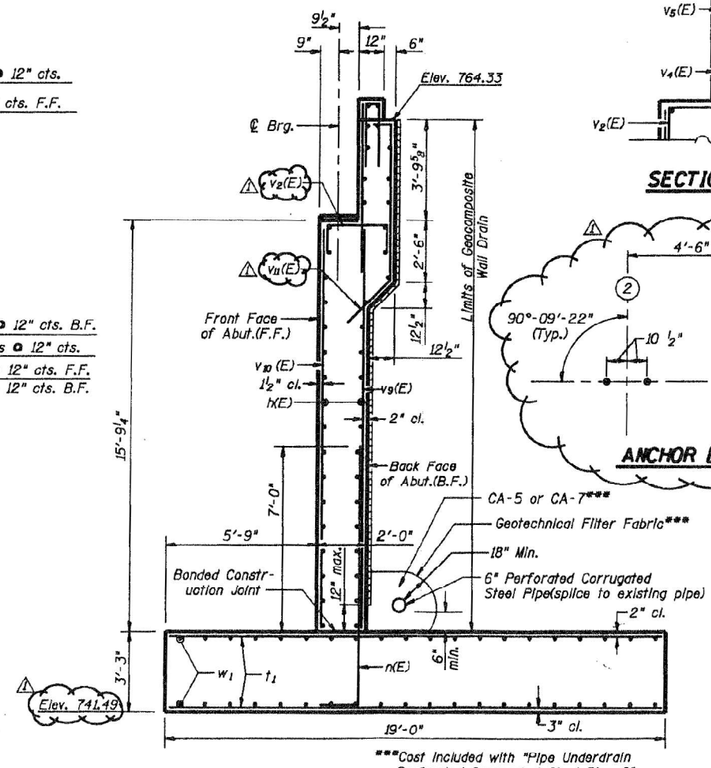

***Cost Included with "Pipe Underdrain Perforated Corrugated Steel Pipe 6"

SECTION A-A

The equivalent Uniform Applied Bearing Pressure = 3.6 K.S.F.

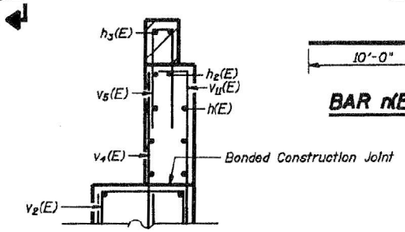

SECTION C-C

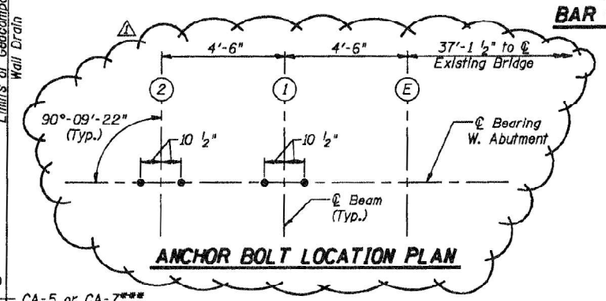

ANCHOR BOLT LOCATION PLAN

BAR v11(E) & v12(E)

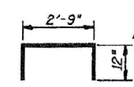

BAR v2(E)

BILL OF MATERIAL

Bar	No.	Size	Length	Shape
h(E)	38	#5	8'-9"	
h1(E)	38	#5	2'-0"	
h2(E)	2	#5	7'-2"	
h3(E)	2	#5	7'-8"	
h4(E)	2	#5	9'-2"	
n(E)	18	#9	12'-0"	
t1	33	#9	18'-9"	
v2(E)	9	#4	4'-9"	
v4(E)	9	#5	6'-6"	
v5(E)	9	#4	6'-3"	
v7(E)	8	#4	2'-5"	
v9(E)	9	#9	15'-6"	
v10(E)	9	#5	15'-6"	
v11(E)	8	#5	9'-0"	
v12(E)	1	#5	8'-0"	
w(E)	38	#5	2'-0"	
w1	38	#5	8'-9"	
Concrete Structures			Cu. Yd.	34.0
Reinforcement Bars, Epoxy Coated			Pound	2190
Reinforcement Bars			Pound	2450
Geocomposite Wall Drain			Sq. Yd.	28
Pipe Underdrain Perf. Corrug. Steel Pipe 6"			foot	13
Concrete Removal			Cu. Yd.	0.7
Structure Excavation			Cu. Yd.	154

NOTES

Cross hatched area indicates "Concrete Removal".
Hatched area to be poured after superstructure forms have been removed. Form top surface to match superstructure. Concrete quantity is billed with "Concrete Superstructure" see sheet #6 of 14.
All surfaces where new concrete is cast against existing concrete shall be Bonded Construction Joints, in accordance with Article 503.09(a)(2) of the Standard Specifications.
Space reinforcement in cap to miss anchor bolts.
Reinforcement bars designated (E) shall be epoxy coated.
For anchor bolt installation details see sheet #10 of 14.
For Section B-B. see Sheet 45 of 50.

*All bars shall be epoxy grouted a minimum 12" into existing concrete in accordance with Section 584 of the Standard Specifications.

DESIGNED	WJV
CHECKED	JPS
DRAWN	WJV
CHECKED	JPS

REVISIONS

1 Review Comments 9/12/97

WEST ABUTMENT
ILL. RTE. 38 OVER ILL. RTE. 53
F.A.P. 567
SECTION (CY, CR & 533H) R-4(85)
DUPAGE COUNTY
STATION 701 +62.41
STRUCTURE NUMBER 022-0163

STATE OF ILLINOIS
DEPARTMENT OF TRANSPORTATION

ROUTE NO.	SECTION	COUNTY	TOTAL SHEETS	SHEET NO.
ILL. RTE. 38 F.A. ROUTE NO.	CITY, CR & SECTION R-4(85)	DUPAGE	50	47
FED. ROAD DIST. NO. 7	ILLINOIS	PROJ. NO. FHWA-PROJ.-		

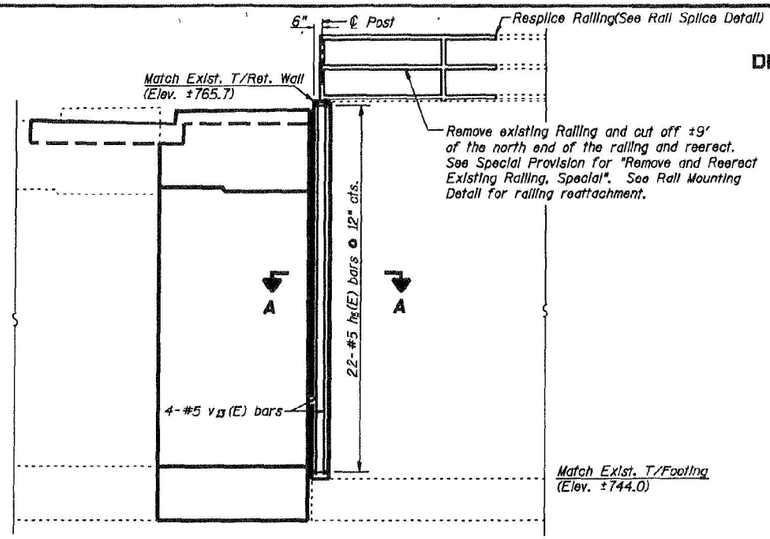

WEST WALL

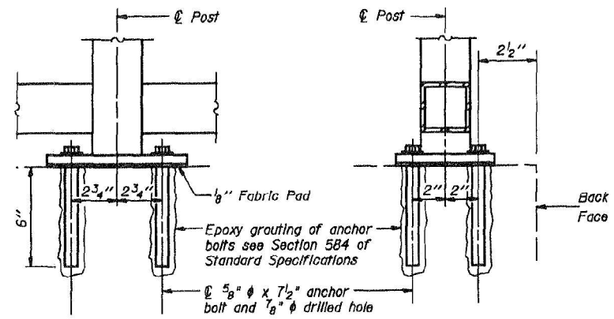

RAIL MOUNTING DETAIL

(28 anchor bolts, cost included with "Remove and Reerect Existing Railing, Special")

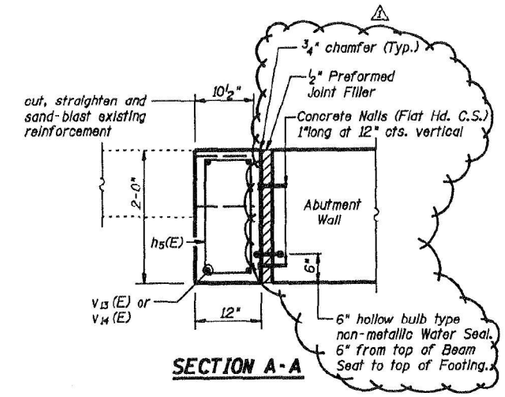

SECTION A-A

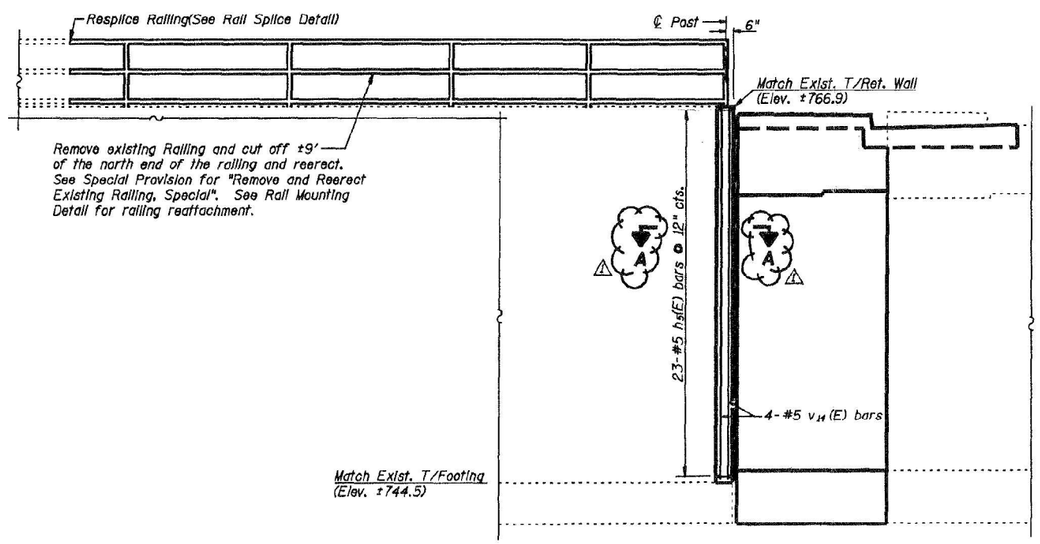

EAST WALL

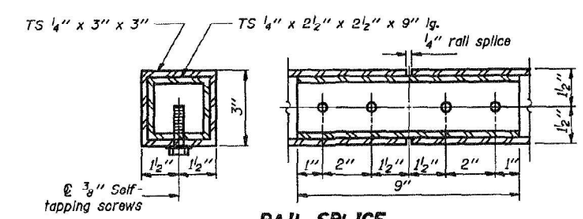

RAIL SPLICE

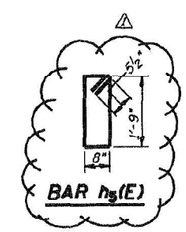

BAR h5(E)

BILL OF MATERIAL

Bar	No.	Size	Length	Shape
h5(E)	45	#5	5'-9"	
v13(E)	4	#5	21'-5"	
v14(E)	4	#5	22'-1"	
Concrete Structures			Cu. Yd.	3.3
Reinforcement Bars, Epoxy Coated			Lbs.	470
Remove and Reerect Exist. Railing, Special			Each	2

NOTES

All surfaces where new concrete is cast against existing concrete shall be Bonded Construction Joints. In accordance with Article 503.09(a)(2) of the Standard Specifications.

Reinforcement bars designated (E) shall be epoxy coated.

Cut off existing anchor bolts and cover with a 2" layer of cement grout. Cost Included with "Remove and Reerect Existing Railing, Special".

See Sheet #2 of 14 for "Concrete Removal".

RETAINING WALLS
ILL. RTE. 38 OVER ILL. RTE. 53
F.A.P. 567
SECTION (CY, CR & 533H) R-4(85)
DUPAGE COUNTY
STATION 701 +62.41
STRUCTURE NUMBER 022-0163

DESIGNED	WJV
CHECKED	JPS
DRAWN	WJV
CHECKED	JPS

REVISIONS

1 Review Comments 9/12/97

MODEL: Default
FILE NAME: pw://mb-us-pw.bentley.com:mb-us-pw-03/Documents/Chicago_IL/01_Projects/D1_IDOT_Var_DEserve_PTB208_005/W01 - 198294/3.0 Deliverables/3.3 CADD Data/Sheets/0220163-62T17-044-Existing Bridge Plans 16 of 16.dgn

Michael Baker INTERNATIONAL

USER NAME = Connor.Liss	DESIGNED MLK	REVISED -	STATE OF ILLINOIS DEPARTMENT OF TRANSPORTATION	EXISTING BRIDGE PLANS (FOR REFERENCE ONLY) STRUCTURE NO. 022-0163
	CHECKED JMK	REVISED -		
PLOT SCALE =	DRAWN JHJ	REVISED -		
PLOT DATE = 8/9/2024	CHECKED MLK/JMK	REVISED -		SHEET S-44 OF S-44 SHEETS

F.A.P. RTE.	SECTION	COUNTY	TOTAL SHEETS	SHEET NO.
0347	0347 22 BJ3	DUPAGE	98	88
		CONTRACT NO. 62T17		
	ILLINOIS	FED. AID PROJECT		

8/9/2024 3:23:16 PM

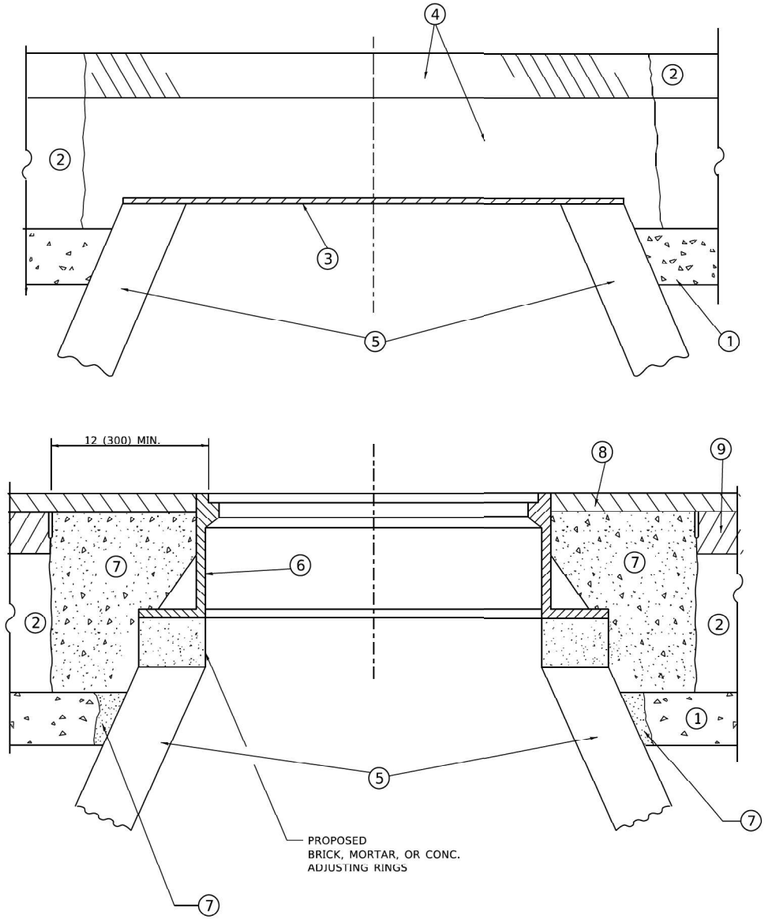

DETAILS FOR FRAMES AND LIDS ADJUSTMENT WITH MILLING

NOTES

1. EXISTING BROKEN FRAMES AND LIDS SHALL BE REMOVED AND DISPOSED OF BY THE CONTRACTOR AND SHALL BE REPLACED AS DIRECTED BY THE ENGINEER. REPLACEMENT FRAMES AND LIDS WILL BE PAID FOR IN ACCORDANCE WITH ARTICLE 109.04 OF THE STANDARD SPECIFICATIONS UNLESS A SEPARATE PAY ITEM HAS BEEN PROVIDED.

2. IF THE EXISTING LIDS ARE OPEN, THE FRAME WILL BE ADJUSTED TO THE ELEVATION OF THE MILLED PAVEMENT SURFACE PRIOR TO THE MILLING OPERATION. THE FRAME WILL NOT BE REMOVED AND COVERED BY THE METAL PLATE.

3. CITY OF CHICAGO CASTINGS ARE THE PROPERTY OF THE CITY AND THE CONTRACTOR SHALL NOTIFY THE CITY FOR REMOVAL AND DISPOSITION OF THE CASTINGS.

4. THE METAL PLATE USED TO COVER THE STRUCTURE SHALL REMAIN THE PROPERTY OF THE CONTRACTOR.

5. THE CONTRACTOR SHALL REMOVE ALL TRAFFIC CONTROL DEVICES BY THE END OF EACH WORK SHIFT.

CONSTRUCTION PROCEDURES

STAGE 1 (BEFORE PAVEMENT MILLING)

A) REMOVE A MINIMUM OF 12 (300) OF THE PAVEMENT FROM AROUND THE STRUCTURE.

B) REMOVE THE EXISTING FRAME AND LID FROM THE STRUCTURE.

C) COVER THE STRUCTURE OPENING WITH A 36 (900) DIAMETER METAL PLATE.

D) BACKFILL WITH CRUSHED STONE AND HMA SURFACE MIX APPROVED BY THE ENGINEER. (MIN. 3 (80) HMA TO REMAIN AFTER MILLING).

STAGE 2 (AFTER PAVEMENT MILLING)

A) REMOVE THE HMA SURFACE MIX AND CRUSHED STONE.

B) INSTALL THE FRAME AND LID; ADJUST THE FRAME TO ITS FINAL SURFACE ELEVATION.

C) THE SURROUNDING SPACE SHALL BE FILLED WITH CLASS PP-2* CONCRETE TO THE ELEVATION OF THE SURFACE OF THE EXISTING BASE COURSE OR THE BINDER COURSE.

*UNLESS OTHERWISE SPECIFIED IN THE PLANS.

THE PROCEDURE EXPLAINED ABOVE SHALL CONFORM TO THE APPLICABLE PORTIONS OF SECTIONS 353, 406, 602, AND 603 OF THE STANDARD SPECIFICATIONS EXCEPT THAT "THE CONTRACTOR SHALL ADJUST THE STRUCTURES TO THE FINISHED PAVEMENT ELEVATION NO MORE THAN 5 CALENDAR DAYS PRIOR TO PLACEMENT OF THE FINAL LIFT OF SURFACE UNLESS APPROVED BY THE ENGINEER."

LEGEND

1. SUB-BASE GRANULAR MATERIAL
2. EXISTING PAVEMENT
3. 36 (900) DIAMETER METAL PLATE
4. PROPOSED CRUSHED STONE AND HMA SURFACE MIX
5. EXISTING STRUCTURE
6. FRAME AND LID (SEE NOTES)
7. CLASS PP-2* CONCRETE
8. PROPOSED HMA SURFACE COURSE
9. PROPOSED HMA BINDER COURSE

LOCATION OF STRUCTURES

THE CONTRACTOR WILL BE REQUIRED TO KEEP A RECORD OF THE LOCATIONS OF THE BURIED STRUCTURES ACCORDING TO THE STATION AND DISTANCE LEFT OR RIGHT OF THE CENTERLINE OF PAVEMENT. UPON COMPLETION OF THE WORK, THE CONTRACTOR WILL DELIVER THE RECORD TO THE ENGINEER.

BASIS OF PAYMENT

1. REMOVING FRAMES AND LIDS ON DRAINAGE AND UTILITY STRUCTURES IN THE PAVEMENT PRIOR TO MILLING, AND ADJUSTING TO FINAL GRADE PRIOR TO PLACING THE SURFACE COURSE, WILL BE PAID FOR AT THE CONTRACT UNIT PRICE EACH FOR "FRAMES AND LIDS TO BE ADJUSTED (SPECIAL)."

2. THIS WORK WILL NOT BE PAID FOR WHEN DRAINAGE AND UTILITY STRUCTURES ARE SPECIFIED FOR PAYMENT AS STRUCTURE RECONSTRUCTION.

3. NEW FRAMES AND LIDS, WHEN SPECIFIED, WILL BE PAID FOR SEPARATELY.

4. WHEN STRUCTURES ARE TO BE ADJUSTED OR RECONSTRUCTED, THE LOWERING AND RAISING OF THE FRAMES AND LIDS WILL NOT BE PAID FOR SEPARATELY BUT WILL BE INCLUDED IN THE COST OF THE CORRESPONDING PAY ITEM.

ALL DIMENSIONS ARE IN INCHES (MILLIMETERS) UNLESS OTHERWISE SHOWN

Michael Baker INTERNATIONAL
200 West Adams Street, Suite 1800, Chicago, IL 60606
Phone: (312) 707-8770 • MBAKERINTL.COM

USER NAME = Connor.Liss	DESIGNED - R. SHAH	REVISED - R. BORO 03-09-11	
	DRAWN -	REVISED - R. BORO 12-06-11	
PLOT SCALE = 0.16666667 ' / in.	CHECKED -	REVISED - K. SMITH 11-18-22	
PLOT DATE = 8/9/2024	DATE - 10/25/1994	REVISED - K. SMITH 09-15-23	

STATE OF ILLINOIS
DEPARTMENT OF TRANSPORTATION

DETAIL FOR
FRAMES AND LIDS ADJUSTMENT WITH MILLING

SCALE: NONE | SHEET 1 OF 1 SHEETS | STA. TO STA.

F.A.P. RTE.	SECTION	COUNTY	TOTAL SHEETS	SHEET NO.
0347	0347 22 BJ3	DUPAGE	98	89
		CONTRACT NO. 62T17		

BD600-03 (BD-08) | ILLINOIS | FED. AID PROJECT

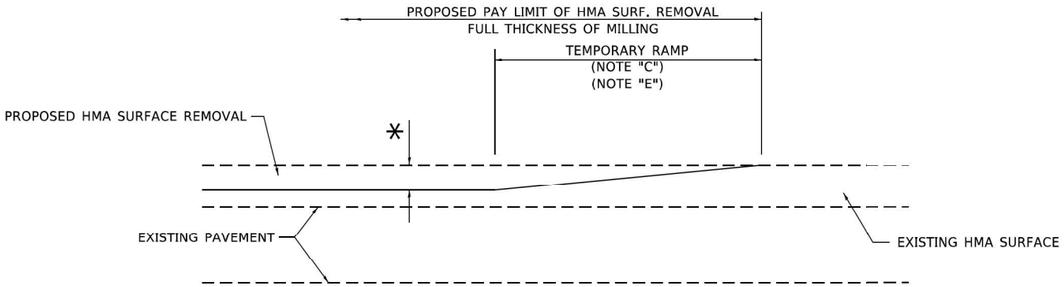

MILLED TEMPORARY RAMP

(FOR BUTT JOINT AND HMA TAPER SEE DETAIL BELOW)

OPTION 1

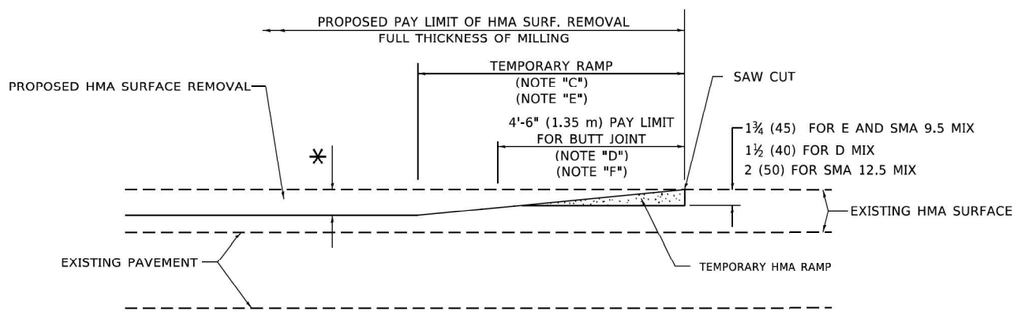

HMA CONSTRUCTED TEMPORARY RAMP

(FOR BUTT JOINT AND HMA TAPER SEE DETAIL BELOW)

OPTION 2

TYPICAL TEMPORARY RAMP

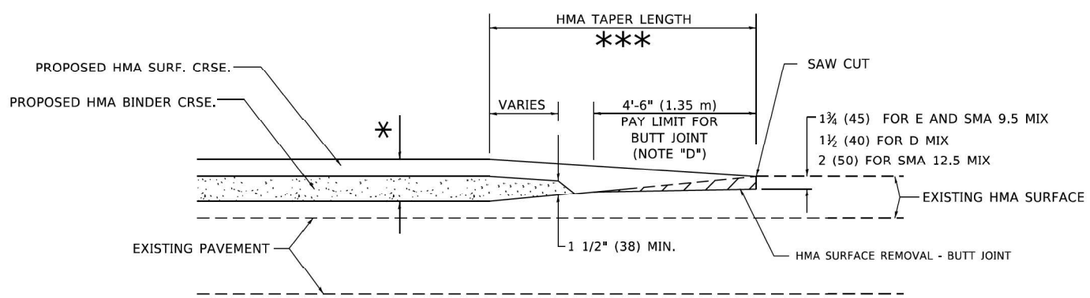

BUTT JOINT AND HMA TAPER

TYPICAL BUTT JOINT AND HMA TAPER FOR MILLING AND RESURFACING

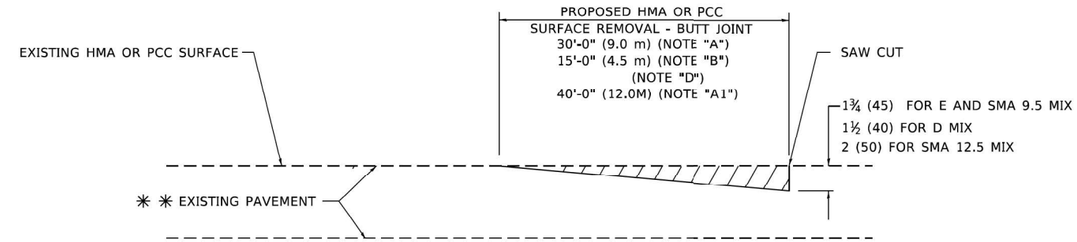

BUTT JOINT DETAIL

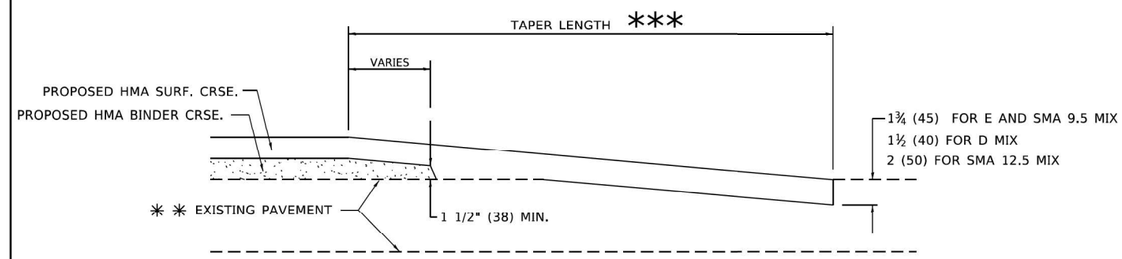

HMA TAPER DETAIL

TYPICAL BUTT JOINT AND HMA TAPER FOR RESURFACING ONLY

** PC CONCRETE, HMA OR HMA RESURFACED PAVEMENT.

GENERAL NOTES

A. MAINLINE ARTERIAL ROADWAYS AND MAJOR SIDE ROADS.

A1. INTERSTATES

B. MINOR SIDE ROADS.

C. THE TEMP. RAMP SHALL BE CONSTRUCTED IMMEDIATELY UPON REMOVAL OF THE EXISTING HMA SURFACE.

D. THE BUTT JOINT SHALL BE CONSTRUCTED IMMEDIATELY PRIOR TO PLACING THE PROPOSED HMA COURSES.

E. TAPER THE TEMP. RAMP AT A RATE OF 3' - 4" (1.02m) PER 1 INCH (25 mm) OF MILLING THICKNESS.

* SEE TYPICAL SECTIONS FOR MILLING THICKNESS.

F. SEE ARTICLE 406.08 AND 406.14 OF THE STANDARD SPECIFICATIONS FOR "HMA AND/OR PCC SURFACE REMOVAL, BUTT JOINT".

*** 20'-0" (6.1 m) PER 1 (25) RESURFACING (NOTE "A")
10'-0" (3.0 m) PER 1 (25) RESURFACING (NOTE "B")

BASIS OF PAYMENT

1. THE BUTT JOINT WILL BE PAID FOR AT THE CONTRACT UNIT PRICE PER SQUARE YARD (SQUARE METER) FOR "HOT-MIX ASPHALT SURFACE REMOVAL - BUTT JOINT" OR FOR "PORTLAND CEMENT CONCRETE SURFACE REMOVAL- BUTT JOINT".
2. THE TEMPORARY RAMP AND SAW CUT SHALL BE INCLUDED IN THE UNIT COST FOR HMA OR PCC SURFACE REMOVAL-BUTT JOINT.

ALL DIMENSIONS ARE IN INCHES (MILLIMETERS) UNLESS OTHERWISE SHOWN.

Michael Baker INTERNATIONAL
200 West Adams Street, Suite 1800, Chicago, IL 60606
Phone: (312) 707-8770 • MBAKERINTL.COM

USER NAME = Connor.Liss	DESIGNED - M DE YONG	REVISED - A. ABBAS 03-21-97	
	DRAWN -	REVISED - M. GOMEZ 04-06-01	
PLOT SCALE = 0.16666667 ' / in.	CHECKED -	REVISED - R. BORO 01-01-07	
PLOT DATE = 8/9/2024	DATE - 06/13/1990	REVISED - K. SMITH 11-18-22	

STATE OF ILLINOIS
DEPARTMENT OF TRANSPORTATION

BUTT JOINT AND HMA TAPER DETAILS

SCALE: NONE | SHEET 1 OF 1 SHEETS | STA. TO STA.

F.A.P. RTE.	SECTION	COUNTY	TOTAL SHEETS	SHEET NO.
0347	0347 22 BJ3	DUPAGE	98	90
		CONTRACT NO. 62T17		
BD400-05 BD-32	ILLINOIS	FED. AID PROJECT		

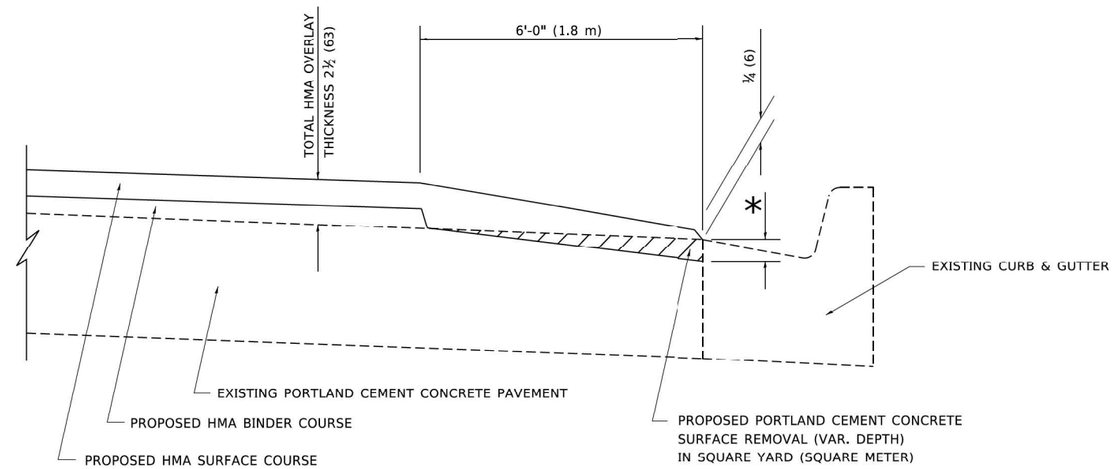

HMA TAPER AT
EDGE OF PCC PAVEMENT

HMA SURFACE COURSE		HMA BINDER COURSE	
MIX	THICKNESS	THICKNESS	* MILLING AT GUTTER FLAG
D	1½ (38)	1 (25)	1¼ (33)
E OR SMA 9.5	1¾ (44)	¾ (19)	1½ (38)

ALL DIMENSIONS ARE IN INCHES (MILLIMETERS) UNLESS OTHERWISE SHOWN.

Michael Baker
INTERNATIONAL
200 West Adams Street, Suite 1800, Chicago, IL 60606
Phone: (312) 707-8770 • MBAKERINTL.COM

USER NAME = Connor.Liss	DESIGNED - R. SHAH	REVISED - E. GOMEZ 12-21-00	
	DRAWN - JIS	REVISED - R. BORO 01-01-07	
PLOT SCALE = 0.16666667 ' / in.	CHECKED - A. ABBAS	REVISED - JP CHANG 07-08-16	
PLOT DATE = 8/9/2024	DATE - 09/10/1994	REVISED - K. SMITH 11-18-22	

STATE OF ILLINOIS
DEPARTMENT OF TRANSPORTATION

HMA TAPER AT
EDGE OF P.C.C. PAVEMENT

SCALE: NONE | SHEET 1 OF 1 SHEETS | STA. TO STA.

F.A.P. RTE.	SECTION	COUNTY	TOTAL SHEETS	SHEET NO.
0347	0347 22 BJ3	DUPAGE	98	91
		CONTRACT NO. 62T17		
BD400-06 BD-33	ILLINOIS	FED. AID PROJECT		

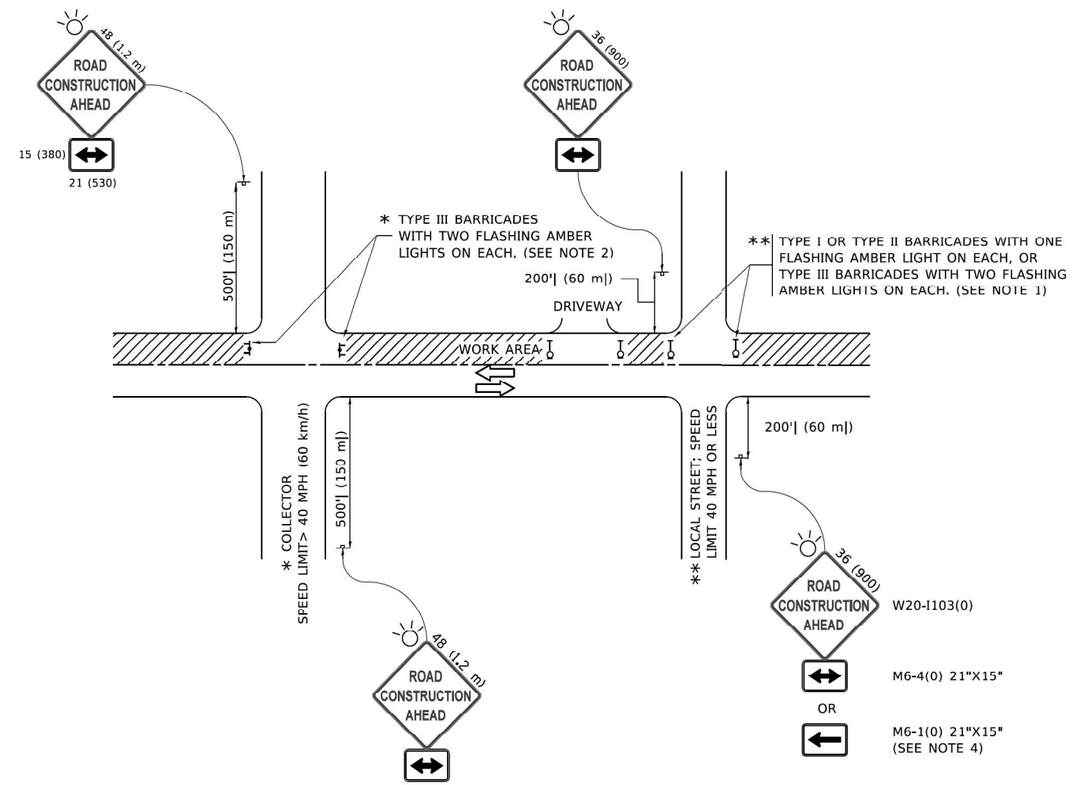

NOTES:

1. SIDE ROAD WITH A SPEED LIMIT OF 40 MPH (60 km/h) OR LESS AS SHOWN ON THE DRAWING AND AS DIRECTED BY THE ENGINEER:

   a) ONE "ROAD CONSTRUCTION AHEAD" SIGN 36 x 36 (900x900) WITH A FLASHER MOUNTED ON IT APPROXIMATELY 200' (60 m) IN ADVANCE OF THE MAIN ROUTE.

   b) THE CLOSED PORTION OF THE MAIN ROUTE SHALL BE PROTECTED BY BLOCKING WITH TYPE I, TYPE II OR TYPE III BARRICADES, 1/3 OF THE CROSS SECTION OF THE CLOSED PORTION.

2. SIDE ROAD WITH A SPEED LIMIT GREATER THAN 40 MPH (60 km/h) AS SHOWN ON THE DRAWING AND AS DIRECTED BY THE ENGINEER:

   a) ONE "ROAD CONSTRUCTION AHEAD" SIGN 48 x 48 (1.2 m x 1.2 m) WITH A FLASHER MOUNTED ON IT APPROXIMATELY 500' (150 m) IN ADVANCE OF THE MAIN ROUTE.

   b) THE CLOSED PORTION OF THE MAIN ROUTE SHALL BE PROTECTED BY BLOCKING WITH TYPE III BARRICADES, 1/2 OF THE CROSS SECTION OF THE CLOSED PORTION.

3. CONES MAY BE SUBSTITUTED FOR BARRICADES OR DRUMS AT HALF THE SPACING DURING DAY OPERATIONS. CONES SHALL BE A MINIMUM OF 28 (710) IN HEIGHT.

4. WHEN THE SIDE ROAD LIES BETWEEN THE BEGINNING OF THE MAINLINE SIGNING AND THE WORK ZONE, A SINGLE HEADED ARROW (M6-1) SHALL BE USED IN LIEU OF THE DOUBLE HEADED ARROW (M6-4).

5. WHEN WORK IS BEING PERFORMED ON A SIDE ROAD OR DRIVEWAY, FOLLOW THE APPLICABLE STANDARD(S). THE DIRECTIONAL ARROW (M6-1 OR M6-4) SHALL BE COVERED OR REMOVED WHEN NO LONGER CONSISTENT WITH THE TRAFFIC CONTROL SET-UP.

6. ADVANCE WARNING SIGNS ARE TO BE OMITTED ON DRIVEWAYS UNLESS OTHERWISE SPECIFIED IN THE PLANS OR BY THE ENGINEER.

7. THE TRAFFIC CONTROL AND PROTECTION FOR SIDE ROADS, INTERSECTIONS, AND DRIVEWAYS SHALL BE INCLUDED IN THE COST OF SPECIFIED TRAFFIC CONTROL STANDARDS OR ITEMS.

All dimensions are in inches (millimeters) unless otherwise shown.

Michael Baker INTERNATIONAL
200 West Adams Street, Suite 1800, Chicago, IL 60606
Phone: (312) 707-8770 • MBAKERINTL.COM

USER NAME = Connor.Liss	DESIGNED - L.H.A.	REVISED - A. HOUSEH 10-15-96	
	DRAWN -	REVISED - T. RAMMACHER 01-06-00	
PLOT SCALE = 0.16666667 ' / in.	CHECKED -	REVISED - A. SCHUETZE 07-01-13	
PLOT DATE = 8/9/2024	DATE - 06-89	REVISED - A. SCHUETZE 09-15-16	

STATE OF ILLINOIS
DEPARTMENT OF TRANSPORTATION

TRAFFIC CONTROL AND PROTECTION FOR SIDE ROADS, INTERSECTIONS, AND DRIVEWAYS

SCALE: NONE | SHEET 1 OF 1 SHEETS | STA. TO STA.

F.A.P. RTE.	SECTION	COUNTY	TOTAL SHEETS	SHEET NO.
0347	0347 22 BJ3	DUPAGE	98	92
		CONTRACT NO. 62T17		

TC-10 | ILLINOIS | FED. AID PROJECT

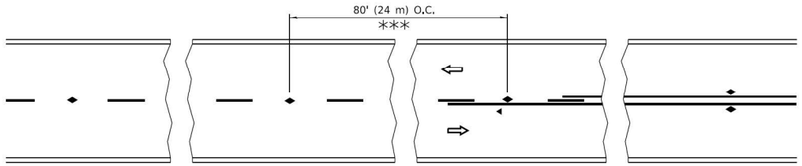

*** REDUCE TO 40' (12 m) O.C. ON CURVES WITH POSTED OR ADVISORY SPEED 45 M.P.H. (70 km/h) OR LESS.

TWO-LANE/TWO-WAY

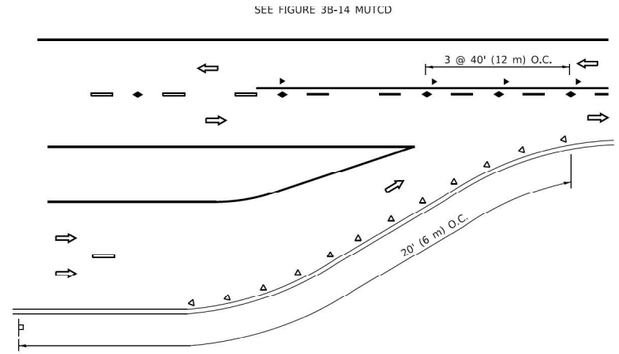

LANE REDUCTION TRANSITION

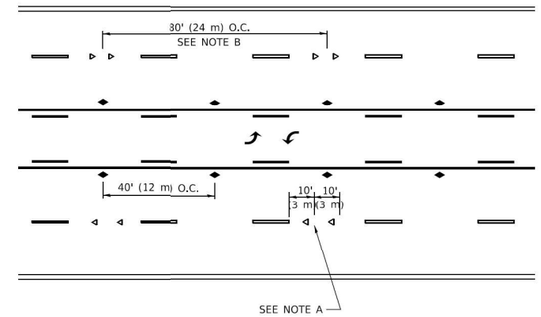

TWO-WAY LEFT TURN

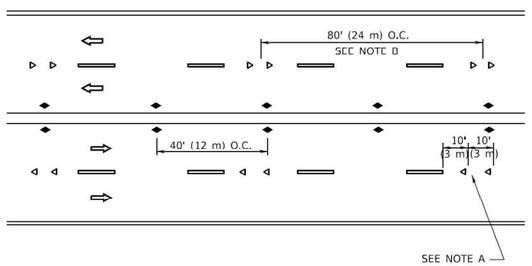

MULTI-LANE/UNDIVIDED

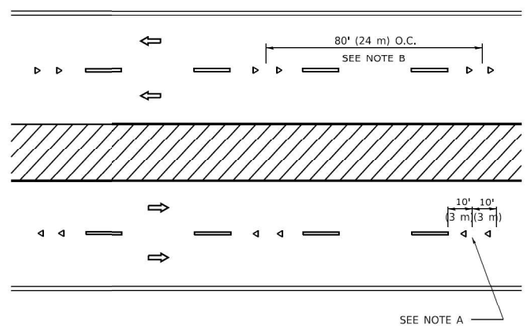

MULTI-LANE/DIVIDED

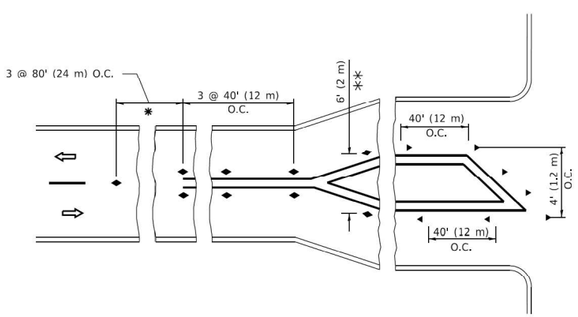

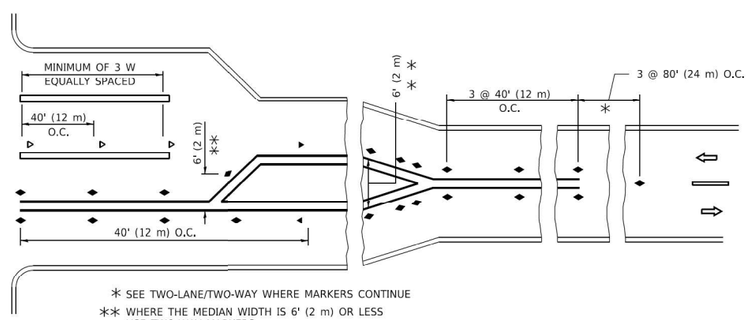

* SEE TWO-LANE/TWO-WAY WHERE MARKERS CONTINUE

** WHERE THE MEDIAN WIDTH IS 6' (2 m) OR LESS USE TWO-WAY MARKERS.

TURN LANES

GENERAL NOTES

1. MARKERS USED WITH DASHED LINES SHALL BE CENTERED IN THE GAP BETWEEN SEGMENTS.
2. MARKERS USED ADJACENT TO SOLID LINES SHALL BE OFFSET 2 TO 3 (50 TO 75) TOWARD TRAFFIC AS SHOWN.
3. MARKERS THROUGH TANGENTS LESS THAN 500' (150 m) IN LENGTH BETWEEN CURVES SHALL BE INSTALLED AT THE LESSER OF THE TWO CURVE SPACINGS.
4. MARKERS ARE TO BE USED ADJACENT TO BOTH SOLID WHITE LINES IN DUAL LEFT TURN LANES

LANE MARKER NOTES

A. USE DOUBLE LANE LINE MARKERS SPACED AS SHOWN.

B. REDUCE TO 40' (12 m) O.C. ON CURVES WHERE ADVISORY SPEEDS ARE 10 M.P.H (20 km/h) LOWER THAN POSTED SPEEDS.

SYMBOLS

- YELLOW STRIPE
- WHITE STRIPE
- ONE-WAY AMBER MARKER
- ONE-WAY CRYSTAL MARKER (W/O)
- TWO-WAY AMBER MARKER

DESIGN NOTES

1. DOUBLE LANE LINE MARKERS SHALL BE USED UNLESS SPECIFIED OTHERWISE.
2. EXCEPT AS SHOWN ON THE LANE REDUCTION TRANSITION AND FREEWAY EXIT RAMP DETAIL, MARKERS ARE NOT TO BE SPECIFIED ON RIGHT EDGE LINES.
3. THE EXACT MARKER LIMITS, SPACING, AND COLOR SHALL BE INCLUDED IN THE PLANS WHEN STANDARD SPECIFICATIONS ARE NOT BEING USED.
4. MARKERS SHOULD NOT BE USED ALONGSIDE CURBS EXCEPT FOR EXTREMELY SHORT SECTIONS OF CURBS WHERE NOT MORE THAN TWO MARKERS WOULD BE INVOLVED.

All dimensions are in inches (millimeters) unless otherwise shown.

Michael Baker INTERNATIONAL
200 West Adams Street, Suite 1800, Chicago, IL 60606
Phone: (312) 707-8770 • MBAKERINTL.COM

USER NAME = Connor.Liss	DESIGNED -	REVISED -	T. RAMMACHER 03-12-09
	DRAWN -	REVISED -	T. RAMMACHER 01-06-00
PLOT SCALE = 0.16666633 ' / in.	CHECKED -	REVISED -	C. JUCIUS 09-09-09
PLOT DATE = 8/9/2024	DATE -	REVISED -	C. JUCIUS 07-01-13

STATE OF ILLINOIS
DEPARTMENT OF TRANSPORTATION

TYPICAL APPLICATIONS
RAISED REFLECTIVE PAVEMENT MARKERS (SNOW PLOW RESISTANT)

SCALE: NONE | SHEET 1 OF 1 SHEETS | STA. TO STA.

F.A.P RTE.	SECTION	COUNTY	TOTAL SHEETS	SHEET NO.
0347	0347 22 BJ3	DUPAGE	98	93

CONTRACT NO. 62T17

TC-11 | ILLINOIS | FED. AID PROJECT

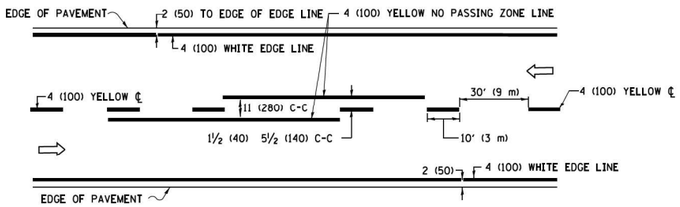

2–LANE ROADWAY

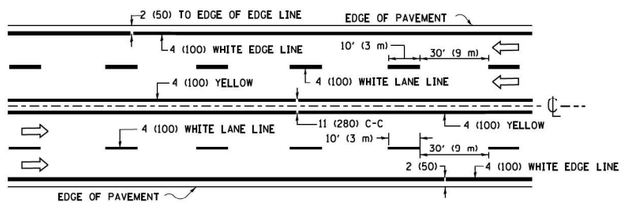

MULTI–LANE UNDIVIDED

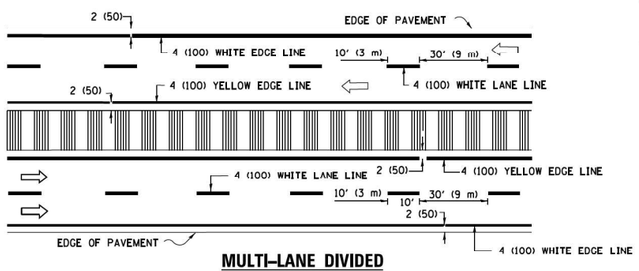

MULTI–LANE DIVIDED

WITH MEDIAN

TYPICAL LANE AND EDGE LINE MARKING

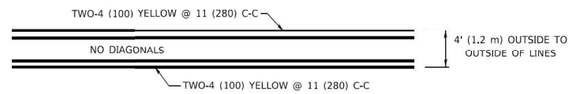

4' (1.2 m) WIDE MEDIANS ONLY

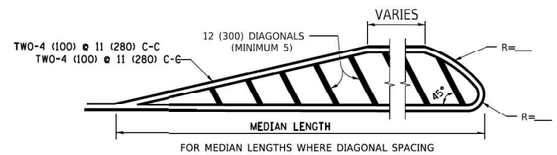

FOR MEDIAN LENGTHS WHERE DIAGONAL SPACING CANNOT BE ATTAINED, USE 5 (FIVE) EQUALLY SPACED DIAGONAL LINES.

DIAGONAL LINE SPACING: 50' (15 m) C-C (LESS THAN 30MPH (50 km/h))
75' (25 m) C-C 30MPH (50 km/h) TO 45MPH (70 km/h))
150' (45 m) C-C (MORE THAN 45MPH (70 km/h))

MEDIANS OVER 4' (1.2 m) WIDE

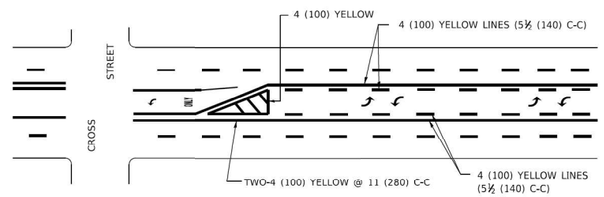

A MINIMUM OF TWO PAIRS OF TURN ARROWS SHALL BE USED, WHITE IN COLOR. ADDITIONAL PAIRS SHALL BE PLACED AT 200' (60 m) TO 300' (90 m) INTERVALS.

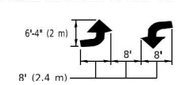

MEDIAN WITH TWO–WAY LEFT TURN LANE

TYPICAL PAINTED MEDIAN MARKING

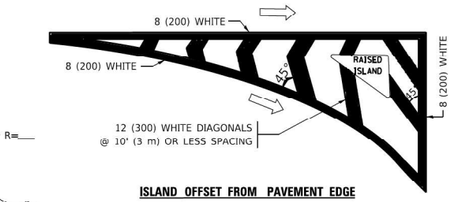

ISLAND OFFSET FROM PAVEMENT EDGE

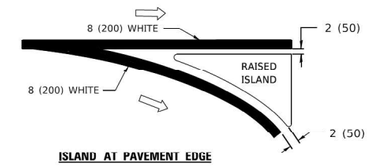

ISLAND AT PAVEMENT EDGE

TYPICAL ISLAND MARKING

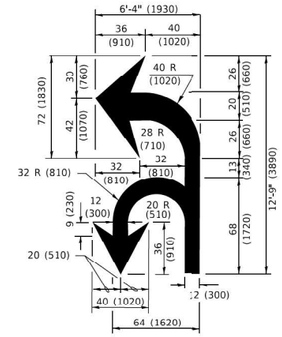

COMBINATION LEFT AND U–TURN

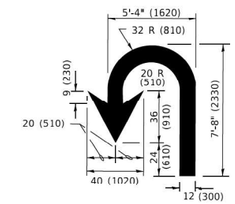

U–TURN

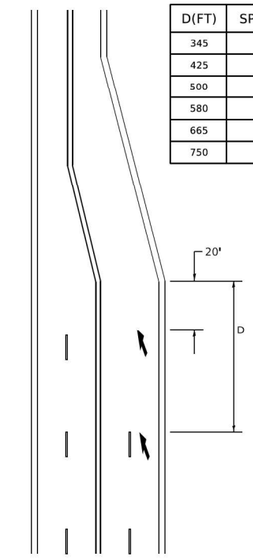

D(FT)	SPEED LIMIT
345	30
425	35
500	40
580	45
665	50
750	55

LANE REDUCTION TRANSITION

* LANE REDUCTION ARROWS REQUIRED AT SPEEDS OF 45 MPH OR GREATER OR WHEN SPECIFIED IN PLANS.

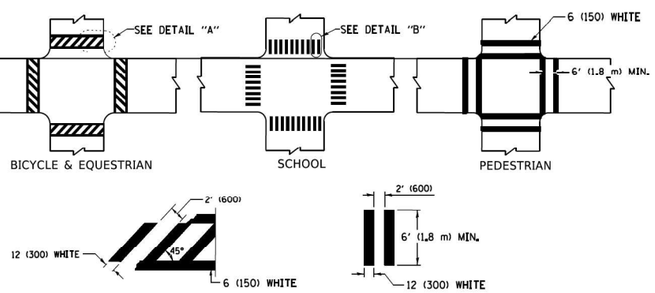

DETAIL "A"

DETAIL "B"

TYPICAL CROSSWALK MARKING

* MARKINGS SHALL BE INSTALLED PARALLEL TO THE CENTERLINE OF THE ROAD WHICH IT CROSSES

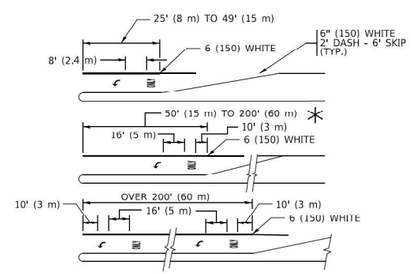

FULL SIZE LETTERS 8' (2.4 m) AND ARROWS SHALL BE USED.
AREA = 15.6 SQ. FT. (1.5 m²) **ONLY** AREA = 20.8 SQ. FT. (1.9 m²)

* TURN LANES IN EXCESS OF 400' (120 m) IN LENGTH MAY HAVE AN ADDITIONAL SET OF ARROW - "ONLY" INSTALLED MIDWAY BETWEEN THE OTHER TWO SETS OF ARROW - "ONLY".

TYPICAL LEFT (OR RIGHT) TURN LANE

TYPICAL TURN LANE MARKING

TYPE OF MARKING	WIDTH OF LINE	PATTERN	COLOR	SPACING / REMARKS
CENTERLINE ON 2 LANE PAVEMENT	4 (100)	SKIP-DASH	YELLOW	10' (3 m) LINE WITH 30' (9 m) SPACE
CENTERLINE ON MULTI-LANE UNDIVIDED PAVEMENT	2 @ 4 (100)	SOLID	YELLOW	11 (280) C-C
NO PASSING ZONE LINES: FOR ONE DIRECTION FOR BOTH DIRECTIONS	4 (100) 2 @ 4 (100)	SOLID SOLID	YELLOW YELLOW	5½ (140) C-C FROM SKIP-DASH CENTERLINE 11 (280) C-C OMIT SKIP-DASH CENTERLINE BETWEEN
LANE LINES	4 (100) 5 (125) ON FREEWAYS	SKIP-DASH SKIP-DASH	WHITE WHITE	10' (3 m) LINE WITH 30' (9 m) SPACE
DOTTED LINES (EXTENSIONS OF CENTER, LANE OR TURN LANE MARKINGS)	SAME AS LINE BEING EXTENDED	SKIP-DASH	SAME AS LINE BEING EXTENDED	2' (600) LINE WITH 6' (1.8 m) SPACE
EDGE LINES	4 (100)	SOLID	YELLOW-LEFT WHITE-RIGHT	OUTLINE MEDIANS IN YELLOW
TURN LANE MARKINGS	6 (150) LINE; FULL SIZE LETTERS & SYMBOLS (8' (2.4m))	SOLID	WHITE	SEE TYPICAL TURN LANE MARKING DETAIL
TWO WAY LEFT TURN MARKING	2 @ 4 (100) EACH DIRECTION 8' (2.4m) LEFT ARROW	SKIP-DASH AND SOLID IN PAIRS	YELLOW WHITE	10' (3 m) LINE WITH 30' (9 m) SPACE FOR SKIP-DASH; 5½ (140) C-C BETWEEN SOLID LINE AND SKIP-DASH LINE SEE TYPICAL TWO-WAY LEFT TURN MARKING DETAIL
CROSSWALK LINES (PEDESTRIAN) A. DIAGONALS (BIKE & EQUESTRIAN) B. LONGITUDINAL BARS (SCHOOL)	2 @ 6 (150) 12 (300) @ 45° 12 (300) @ 90°	SOLID SOLID SOLID	WHITE WHITE WHITE	NOT LESS THAN 6' (1.8 m) APART 2' (600) APART 2' (600) APART SEE TYPICAL CROSSWALK MARKING DETAILS.
STOP LINES	24 (600)	SOLID	WHITE	PLACE 4' (1.2 m) IN ADVANCE OF AND PARALLEL TO CROSSWALK, IF PRESENT. OTHERWISE, PLACE AT DESIRED STOPPING POINT. PARALLEL TO CROSSROAD CENTERLINE, WHERE POSSIBLE
PAINTED MEDIANS	2 @ 4 (100) WITH 12 (300) DIAGONALS @ 45° NO DIAGONALS USED FOR 4' (1.2 m) WIDE MEDIANS	SOLID	YELLOW: TWO WAY TRAFFIC WHITE: ONE WAY TRAFFIC	11 (280) C-C FOR THE DOUBLE LINE SEE TYPICAL PAINTED MEDIAN MARKING.
GORE MARKING AND CHANNELIZING LINES	8 (200) WITH 12 (300) DIAGONALS @ 45°	SOLID	WHITE	DIAGONALS: 15' (4.5 m) C-C (LESS THAN 30MPH (50 km/h)) 20' (6 m) C-C 30MPH (50 km/h) TO 45MPH (70 km/h)) 30' (9 m) C-C (OVER 45MPH (70 km/h))
RAILROAD CROSSING	24 (600) TRANSVERSE LINES; "RR" IS 6' (1.8 m) LETTERS; 16 (400) LINE FOR "X"	SOLID	WHITE	SEE STATE STANDARD 780001 AREA OF: "R"=3.6 SQ. FT. (0.33 m²) EACH "X"=54.0 SQ. FT. (5.0 m²)
SHOULDER DIAGONALS (REQUIRED FOR SHOULDERS ≥ 8')	12 (300) @ 45°	SOLID	WHITE - RIGHT YELLOW - LEFT	50' (15 m) C-C (LESS THAN 30MPH (50 km/h)) 75' (25 m) C-C (30 MPH (50 km/h) TO 45MPH (70 km/h)) 150' (45 m) C-C (OVER 45MPH (70 km/h))
U TURN ARROW	SEE DETAIL	SOLID	WHITE	16.3 SF
2 ARROW COMBINATION LEFT AND U TURN	SEE DETAIL	SOLID	WHITE	30.4 SF

FOR FURTHER DETAILS ON PAVEMENT MARKING REFER TO STANDARD SPECIFICATIONS FOR ROAD AND BRIDGE CONSTRUCTION AND STATE STANDARD 780001

All dimensions are in inches (millimeters) unless otherwise shown.

MODEL: D1det-tc13 [Sheet]
FILE NAME: pw://mb-us-pw.bentley.com:mb-us-pw-03/Documents/Chicago, IL/01_Projects/D1_IDOT_Var_DEserve_PTB208_005/W01 - 198294.3.0 Deliverables/3.3 CADD Data/Sheets/D162T17-eIH-D1det-tc13.dgn

Michael Baker INTERNATIONAL
200 West Adams Street, Suite 1800, Chicago, IL 60606
Phone: (312) 707-8770 • MBAKERINTL.COM

USER NAME = Connor.Liss	DESIGNED - EVERS	REVISED - C. JUCIUS 09-09-09	
	DRAWN -	REVISED - C. JUCIUS 07-01-13	
PLOT SCALE = 0.16666667 ' / in.	CHECKED -	REVISED - C. JUCIUS 12-21-15	
PLOT DATE = 8/9/2024	DATE - 03/19/1990	REVISED - C. JUCIUS 04-12-16	

STATE OF ILLINOIS
DEPARTMENT OF TRANSPORTATION

DISTRICT ONE
TYPICAL PAVEMENT MARKINGS

SCALE: NONE | SHEET 1 OF 1 SHEETS | STA. TO STA.

F.A.P. RTE.	SECTION	COUNTY	TOTAL SHEETS	SHEET NO.
0347	0347 22 BJ3	DUPAGE	98	94
		CONTRACT NO. 62T17		
TC-13	ILLINOIS	FED. AID PROJECT		

TURN BAY ENTRANCE AT START OF LANE CLOSURE TAPER

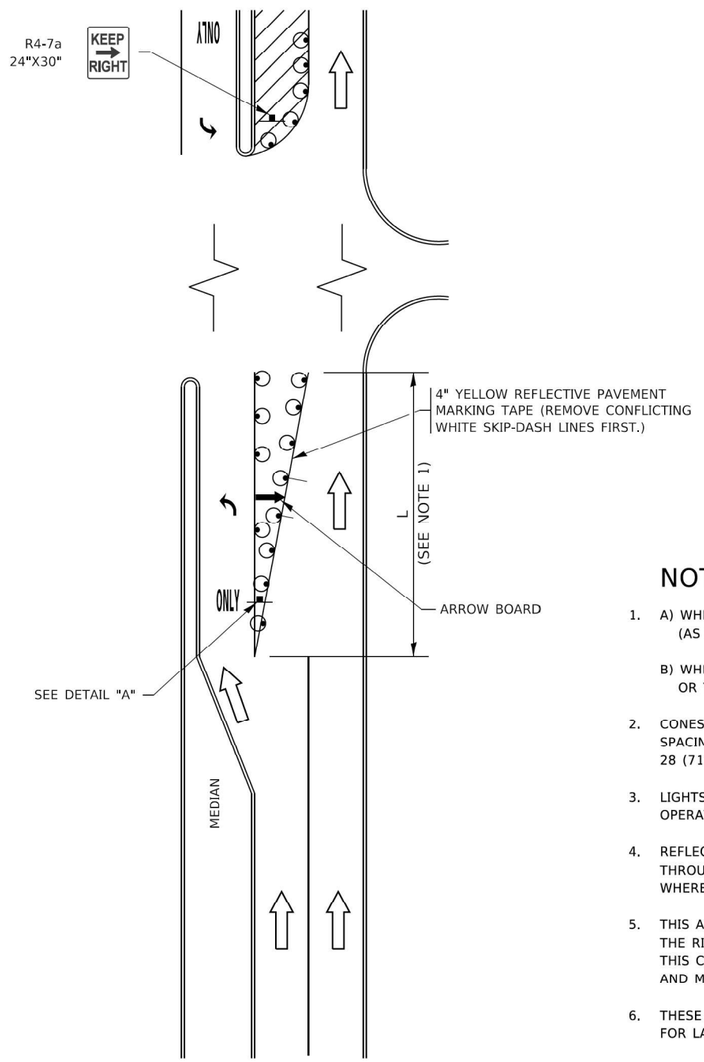

FIGURE 1

LEGEND

- WORK AREA
- LANE OPEN TO TRAFFIC
- ARROW BOARD
- TYPE I OR II BARRICADE OR DRUM WITH STEADY BURN LIGHT
- DRUM WITH STEADY BURN LIGHT
- SIGN ASSEMBLY
- TYPE I OR II CHECK BARRICADE WITH FLASHING LIGHT

NOTES:

1. A) WHEN "L" IS ≤ THE STORAGE LENGTH OF THE TURN LANE (AS SHOWN IN FIG. 1), USE FIGURE 1.

   B) WHEN "L" IS > THE STORAGE LENGTH OF THE TURN LANE OR THE TURN LANE IS WITHIN THE LANE CLOSURE, USE FIGURE 2.

2. CONES MAY BE SUBSTITUTED FOR BARRICADES OR DRUMS AT HALF THE SPACING DURING DAY OPERATIONS. CONES SHALL BE A MINIMUM OF 28 (710) IN HEIGHT.

3. LIGHTS WILL NOT BE REQUIRED ON BARRICADES OR DRUMS FOR DAY OPERATIONS. ALL LIGHTS SHALL BE MONODIRECTIONAL.

4. REFLECTIVE TEMPORARY PAVEMENT MARKINGS SHALL BE PLACED THROUGHOUT THE BARRICADED AREAS OF EACH TURN BAY AS SHOWN WHERE THE CLOSURE TIME IS GREATER THAN FOURTEEN (14) DAYS.

5. THIS APPLICATION ALSO APPLIES WHEN WORK IS BEING PERFORMED IN THE RIGHT LANE(S) AND THE RIGHT TURN BAY IS TO REMAIN OPEN. UNDER THIS CONDITION, "RIGHT TURN LANE" R3-I100R 24 x 24 (600 x 600) AND M6-2R 21 x 15 (530 x 380) SHALL BE USED.

6. THESE CONTROLS SHALL SUPPLEMENT MAINLINE TRAFFIC CONTROL FOR LANE CLOSURES.

7. THE SIGNS SHALL BE MOUNTED ABOVE THE BARRICADES/DRUMS ON SEPARATE SIGN SUPPORTS THAT MEET NCHRP 350 OR MASH PREQUIREMENTS.

8. TRAFFIC CONTROL AND PROTECTION AT TURN BAYS (TO REMAIN OPEN TO TRAFFIC) SHALL BE INCLUDED IN THE COST OF SPECIFIED TRAFFIC CONTROL STANDARDS OR ITEMS.

TURN BAY ENTRANCE WITHIN A LANE CLOSURE

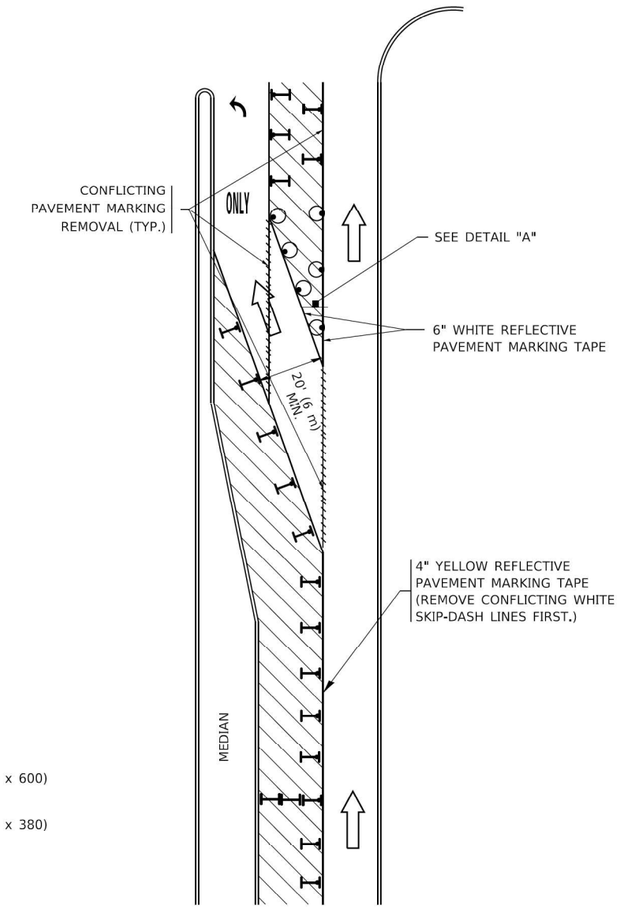

FIGURE 2

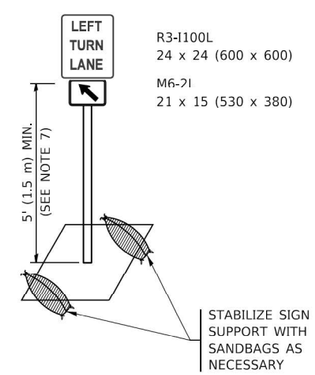

DETAIL A

All dimensions are in inches (millimeters) unless otherwise shown.

MODEL: D1det-tc14 [Sheet]
FILE NAME: pw://mb-us-pw.bentley.com:mb-us-pw-03/Documents/Chicago_IL/01_Projects/D1_IDOT_Var_DEservs_PTB208_005/W01 - 198294.3.0 Deliverables/3.3 CADD Data/Sheets/D162T17-eIH-D1det-tc14.dgn

Michael Baker INTERNATIONAL 200 West Adams Street, Suite 1800, Chicago, IL 60606 Phone: (312) 707-8770 • MBAKERINTL.COM	USER NAME = Connor.Liss	DESIGNED - T. RAMMACHER 09-08-94	REVISED - R. BORO 09-14-09	STATE OF ILLINOIS DEPARTMENT OF TRANSPORTATION	TRAFFIC CONTROL AND PROTECTION AT TURN BAYS (TO REMAIN OPEN TO TRAFFIC)	F.A.P. RTE.	SECTION	COUNTY	TOTAL SHEETS	SHEET NO.
		DRAWN - A. HOUSEH 11-07-95	REVISED - A. SCHUETZE 07-01-13			0347	0347 22 BJ3	DUPAGE	98	95
	PLOT SCALE = 0.16666667 ' / in.	CHECKED - A. HOUSEH 10-12-96	REVISED - A. SCHUETZE 09-15-16					CONTRACT NO. 62T17		
	PLOT DATE = 8/9/2024	DATE - T. RAMMACHER 09-08-94	REVISED -		SCALE: NONE SHEET 1 OF 1 SHEETS STA. TO STA.	TC-14	ILLINOIS	FED. AID PROJECT		

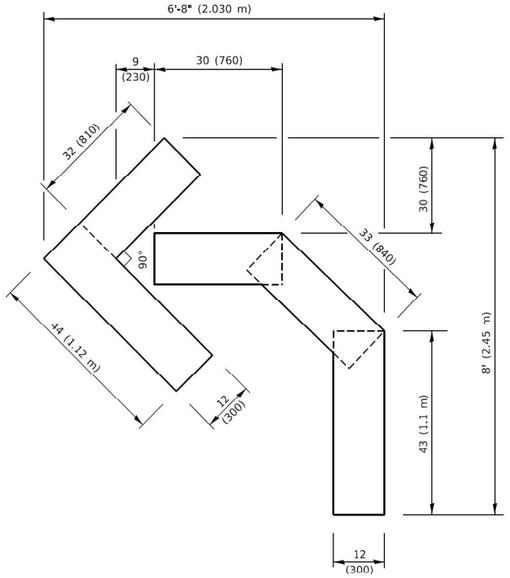

QUANTITY

4 (100) LINE = 45.5 ft. (13.9 m)
15.2 sq. ft. (1.41 sq. m)

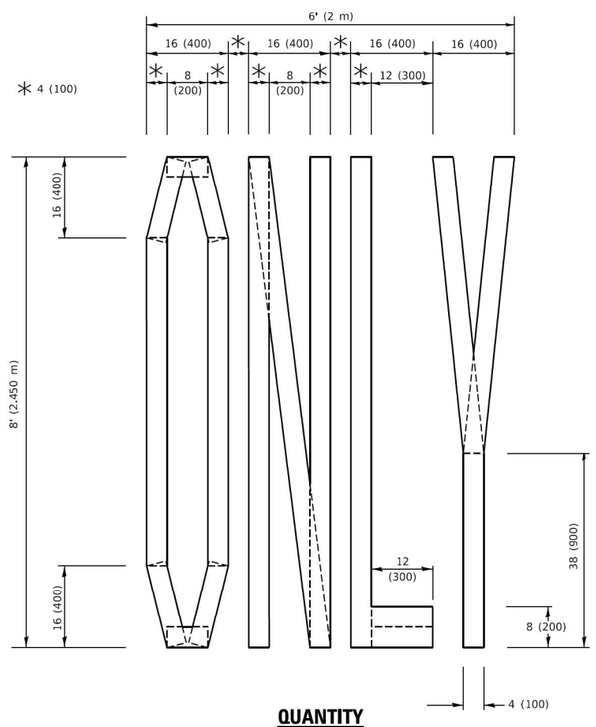

QUANTITY

4 (100) LINE = 64.1 ft. (19.5 m)
21.4 sq. ft. (1.99 sq. m)

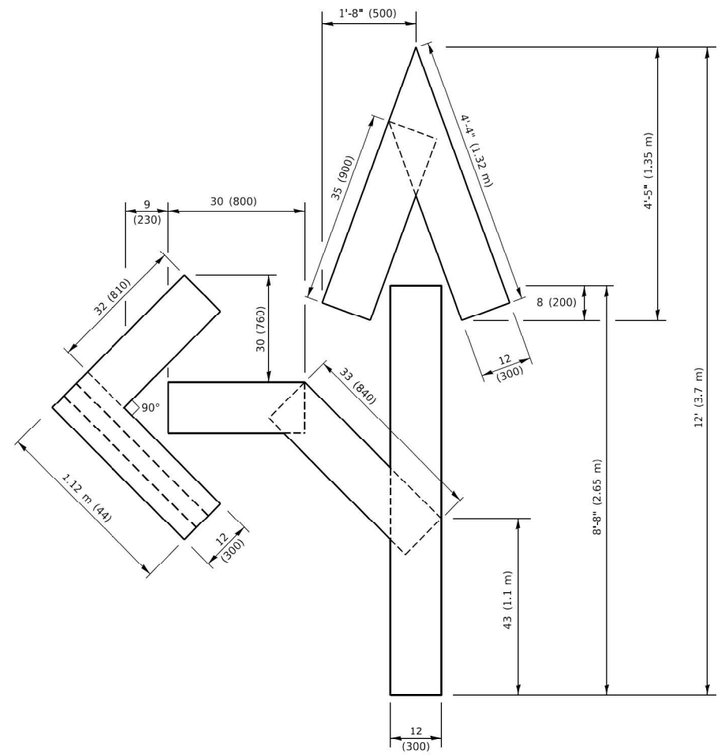

QUANTITY

4 (100) LINE = 82.5 ft. (25.1 m)
27.5 sq. ft. (2.53 sq. m)

NOTE:

ALL QUANTITIES OF PLACEMENT ARE REPRESENTED IN LINEAR FEET OF 4" LINES TO MATCH THE 4" TEMPORARY TAPE PAY ITEM AND REPRESENTS THE TOTAL QUANTITY OF 4" TAPE REQUIRED.

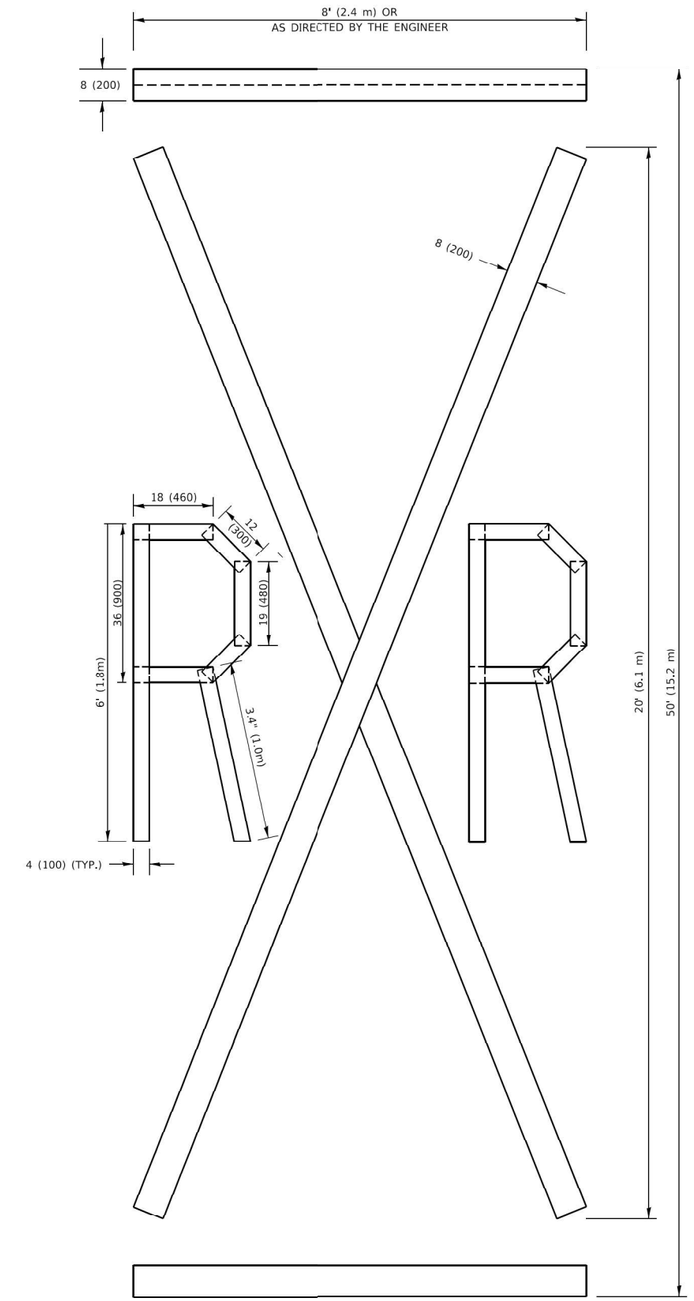

QUANTITY

4 (100) LINE = 225.9 ft. (68.9 m)
75.3 sq. ft. (6.99 sq. m)

All dimensions are in inches (millimeters) unless otherwise shown.

MODEL: D1det-tc16 [Sheet]
FILE NAME: pw://mh-us-pw.bentley.com:mb-us-pw-03/Documents/Chicago_IL/01_Projects/D1_IDOT_Var_DEserve_PTB208_005/W01 - 1982943.0 Deliverables/3.3 CADD Data/Sheets/D162T17-eIH-D1det-tc16.dgn

Michael Baker INTERNATIONAL
200 West Adams Street, Suite 1800, Chicago, IL 60606
Phone: (312) 707-8770 • MBAKERINTL.COM

USER NAME = Connor.Liss	DESIGNED -	REVISED - T. RAMMACHER 03-02-98	
	DRAWN -	REVISED - E. GOMEZ 08-28-00	
PLOT SCALE = 0.16666667 ' / in.	CHECKED -	REVISED - E. GOMEZ 08-28-00	
PLOT DATE = 8/9/2024	DATE - 09/18/1994	REVISED - A. SCHUETZE 09-15-16	

STATE OF ILLINOIS
DEPARTMENT OF TRANSPORTATION

SHORT TERM PAVEMENT LETTERS AND SYMBOLS

SCALE: NONE | SHEET 1 OF 1 SHEETS | STA. | TO STA.

F.A.P. RTE.	SECTION	COUNTY	TOTAL SHEETS	SHEET NO.
0347	0347 22 BJ3	DUPAGE	98	96
		CONTRACT NO. 62T17		
TC-16	ILLINOIS	FED. AID PROJECT		

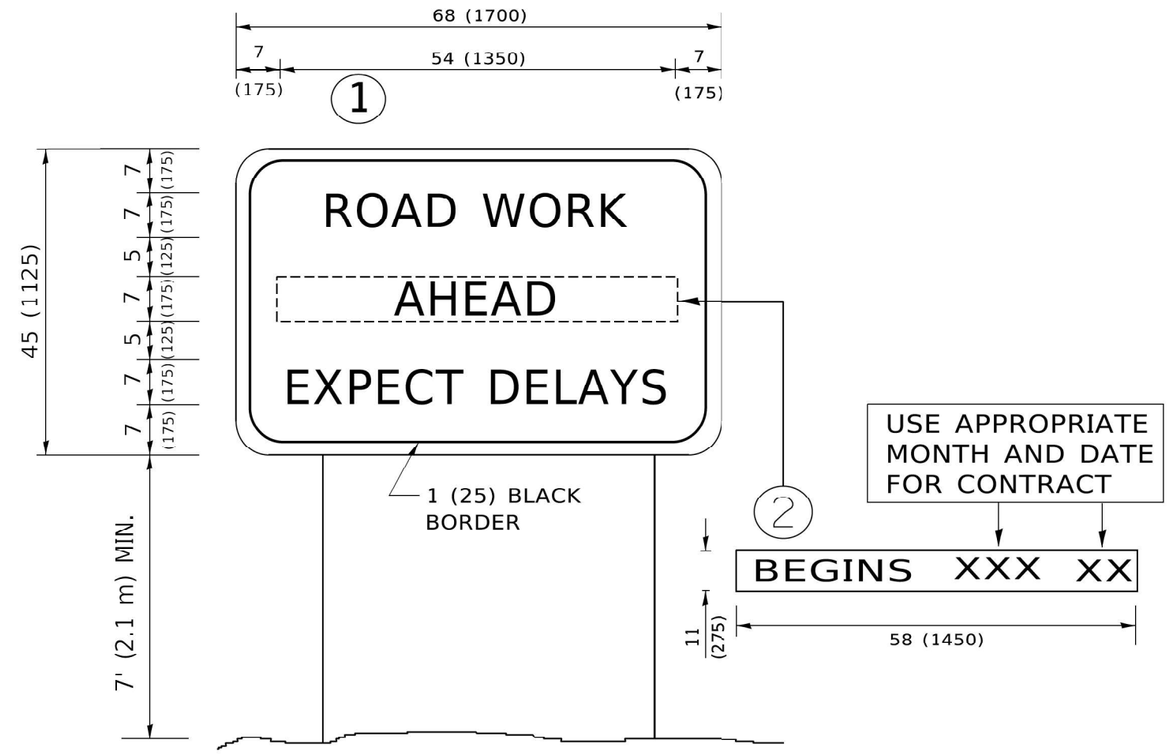

NOTES:

1. USE BLACK LETTERING ON ORANGE BACKGROUND.
2. ERECT SIGNS IN ADVANCE OF THE LOCATION FOR THE "ROAD CONSTRUCTION AHEAD" SIGN AT LOCATIONS AS DIRECTED BY THE ENGINEER.
3. ERECT SIGN (1) WITH INSTALLED PANEL (2) ONE WEEK PRIOR TO THE START OF CONSTRUCTION.
4. REMOVE PANEL (2) SOON AFTER THE START OF CONSTRUCTION.
5. SEE SPECIAL PROVISION FOR "TEMPORARY INFORMATION SIGNING" FOR ADDITIONAL INFORMATION.
6. ONE SIGN ASSEMBLY EQUALS 25.70 SQ. FT. (2.3 SQ. M.)
7. SHALL BE PAID FOR AS TEMPORARY INFORMATION SIGNING.

ALL DIMENSIONS ARE IN INCHES (MILLIMETERS) UNLESS OTHERWISE SHOWN.

Michael Baker INTERNATIONAL
200 West Adams Street, Suite 1800, Chicago, IL 60606
Phone: (312) 707-8770 • MBAKERINTL.COM

USER NAME = Connor.Liss	DESIGNED -	REVISED - R. MIRS 09-15-97	
	DRAWN -	REVISED - R. MIRS 12-11-97	
PLOT SCALE = 0.16666667 ' / in.	CHECKED -	REVISED - T. RAMMACHER 02-02-99	
PLOT DATE = 8/9/2024	DATE -	REVISED - C. JUCIUS 01-31-07	

STATE OF ILLINOIS
DEPARTMENT OF TRANSPORTATION

ARTERIAL ROAD INFORMATION SIGN

SCALE: NONE | SHEET 1 OF 1 SHEETS | STA. | TO STA.

F.A.P. RTE.	SECTION	COUNTY	TOTAL SHEETS	SHEET NO.
0347	0347 22 BJ3	DUPAGE	98	97
		CONTRACT NO. 62T17		
TC-22	ILLINOIS	FED. AID PROJECT		

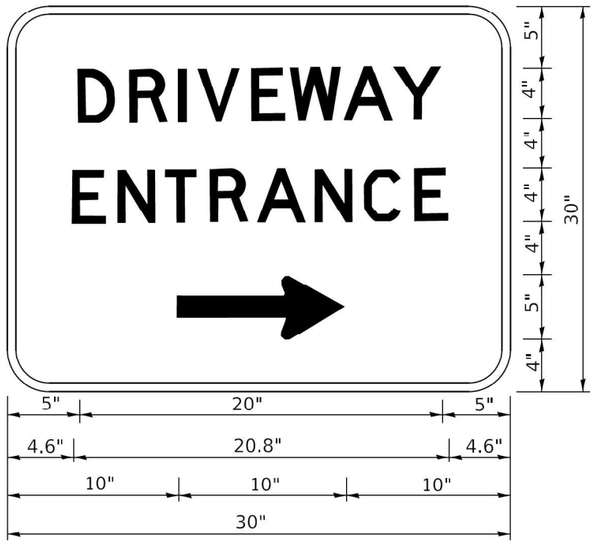

3.0" RADIUS, 0.5" BORDER, WHITE ON GREEN; REFLECTORIZED
"DRIVEWAY" D; "ENTRANCE" D; STANDARD ARROW CUSTOM 12.0" x 5.0"

NOTES:

1. HALF OF THE SIGNS WILL REQUIRE A LEFT HAND FACING ARROW.
2. TWO SIGNS SHALL BE USED AT EACH COMMERCIAL ENTRANCE PLACED BACK-TO-BACK: ONE WITH A RIGHT HAND ARROW (SHOWN) SHALL BE PLACED ON THE NEAR RIGHT SIDE THE DRIVEWAY AND ONE WITH A LEFT HAND ARROW SHALL BE PLACED ON THE FAR LEFT SIDE OF THE DRIVEWAY.
3. SIGNS TO BE PAID FOR AS ITEM "TEMPORARY INFORMATION SIGNING".

Michael Baker
INTERNATIONAL
200 West Adams Street, Suite 1800, Chicago, IL 60606
Phone: (312) 707-8770 • MBAKERINTL.COM

USER NAME = Connor.Liss	DESIGNED -	REVISED - C. JUCIUS 02-15-07	
	DRAWN -	REVISED -	
PLOT SCALE = 0.16666667 ' / in.	CHECKED -	REVISED -	
PLOT DATE = 8/9/2024	DATE -	REVISED -	

STATE OF ILLINOIS
DEPARTMENT OF TRANSPORTATION

DRIVEWAY ENTRANCE SIGNING

SCALE: NONE | SHEET 1 OF 1 SHEETS | STA. | TO STA.

F.A.P. RTE.	SECTION	COUNTY	TOTAL SHEETS	SHEET NO.
0347	0347 22 BJ3	DUPAGE	98	98
		CONTRACT NO. 62T17		
TC-26	ILLINOIS	FED. AID PROJECT		