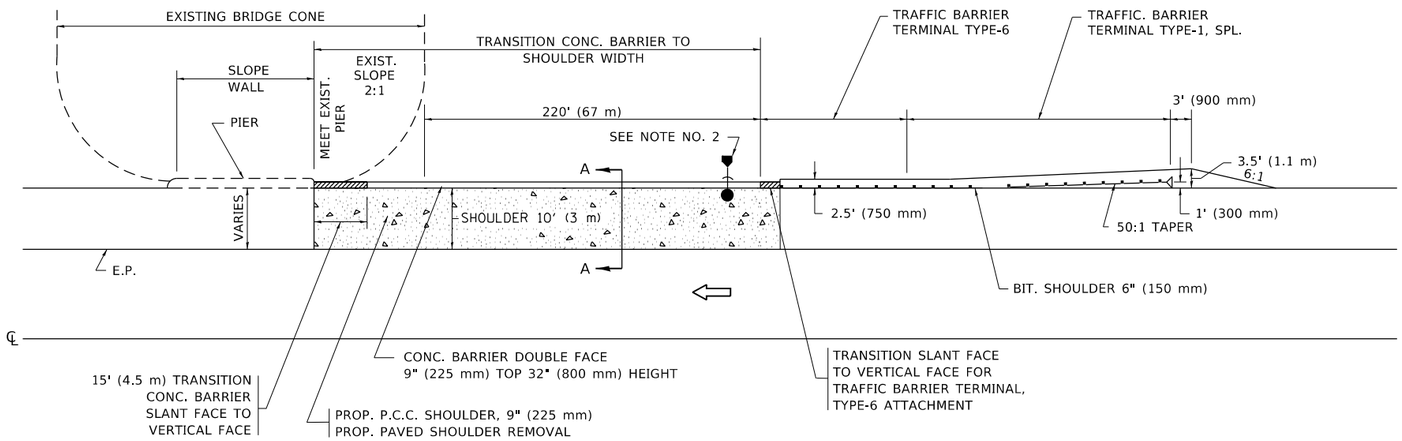

CONC. BARRIER ADJACENT TO SLOPE WALL WITH PIER (DITCH SECTION)

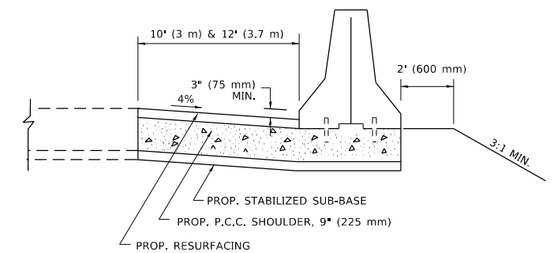

SECTION A–A

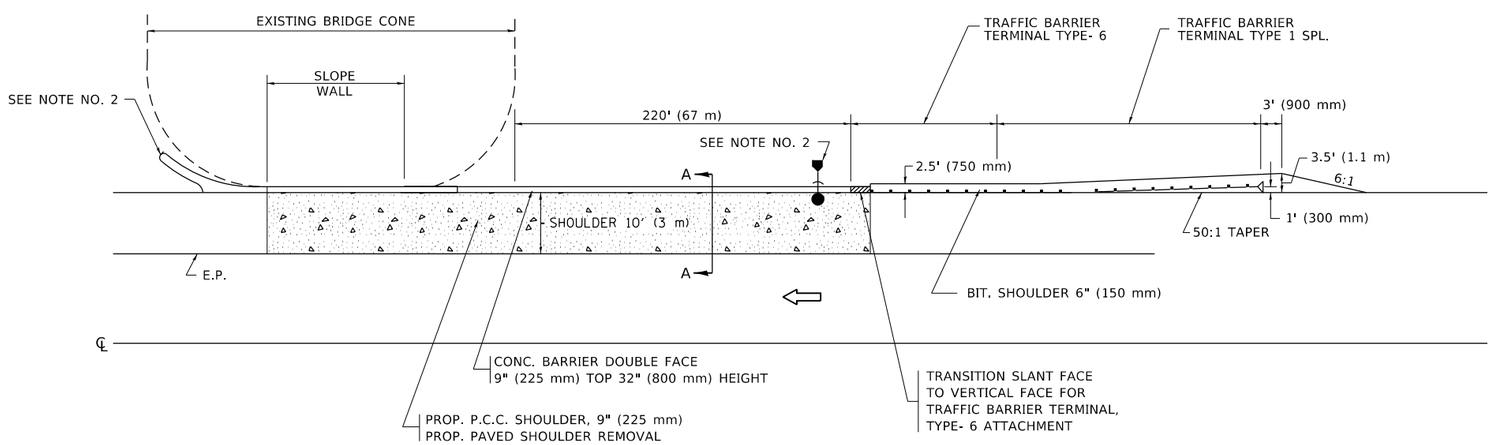

CONC. BARRIER ADJACENT TO SLOPE WALL WITHOUT PIER (DITCH SECTION)

GENERAL NOTES:

1. SEE STATE STANDARD 630201 FOR STABILIZATION FOR GUARDRAIL.
2. * THE GUTTER OUTLET AND CATCH BASIN LOCATION IS DEPENDENT ON DIRECTION OF FLOW.
3. USE CONC. BARRIER SINGLE FACE IF CLEARANCE BETWEEN PIER AND SHOULDER IS LESS THAN 27'' (685 mm).
4. SEE STATE STANDARD 637001 FOR CONCRETE BARRIER.

* { CATCH BASIN TYPE C, TYPE 24 FRAME AND GRATE
STORM SEWERS, 12'' (300 mm)
END SECTIONS, 12'' (300 mm) }

MODEL: Default
FILE NAME: pw:\\illdot-pw.bentley.com:PWIDOT\Documents\IDOT Offices\District 1\Projects\Std22x34\CADData\CADsheets\bd29.dgn

USER NAME = Lawrence.DeManche	DESIGNED -	REVISED - K. SMITH 11-18-22	STATE OF ILLINOIS DEPARTMENT OF TRANSPORTATION
	DRAWN -	REVISED -	
PLOT SCALE = 100.0000 ' / in.	CHECKED -	REVISED -	
PLOT DATE = 11/18/2022	DATE - 10-18-02	REVISED -	

CONCRETE BARRIER PIER AND SLOPE WALL PROTECTION DETAIL

SCALE: NONE | SHEET 1 OF 1 SHEETS | STA. TO STA.

F.A. RTE.	SECTION	COUNTY	TOTAL SHEETS	SHEET NO.
BD600–08 (BD–29)		CONTRACT NO.		
	ILLINOIS	FED. AID PROJECT		