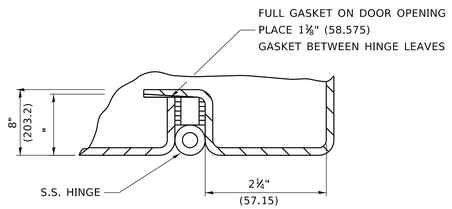

DETAIL "Y"

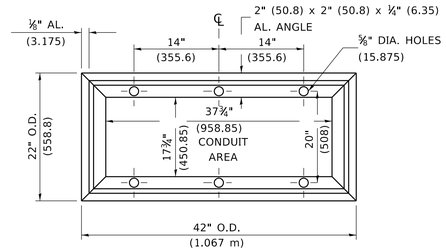

BASE MTG. DETAIL

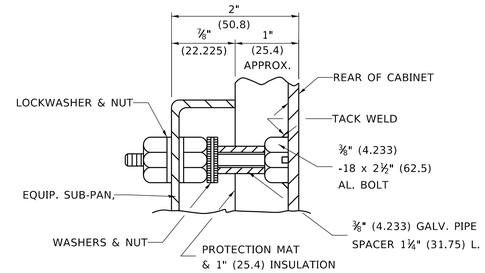

DETAIL "X"

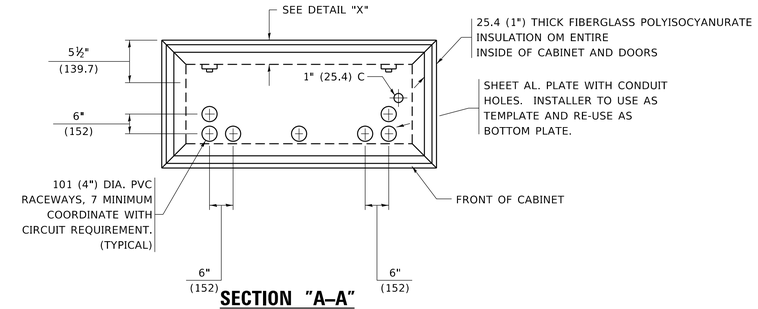

SECTION "A–A"

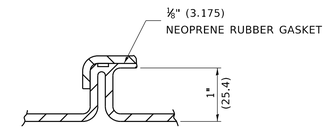

DETAIL "Z"

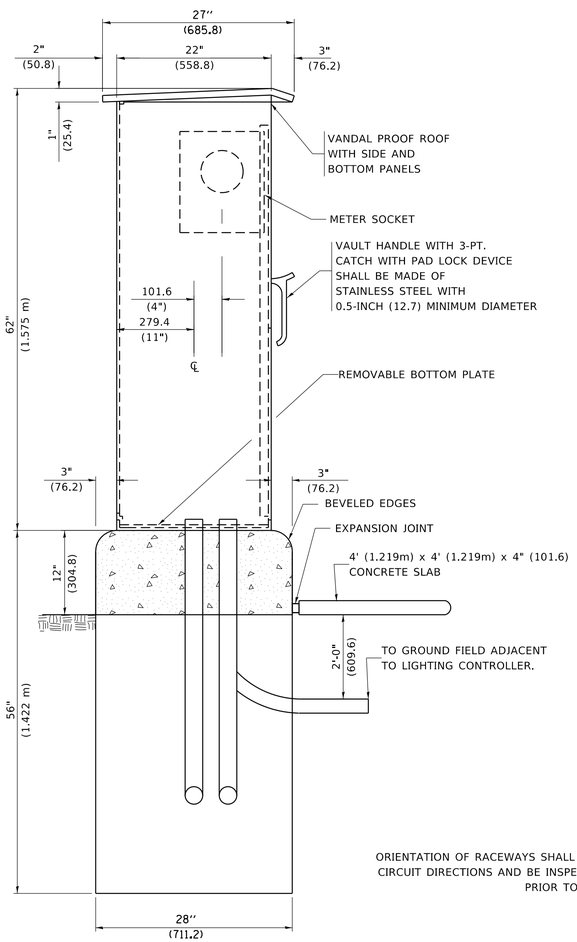

LEFT SIDE ELEVATION

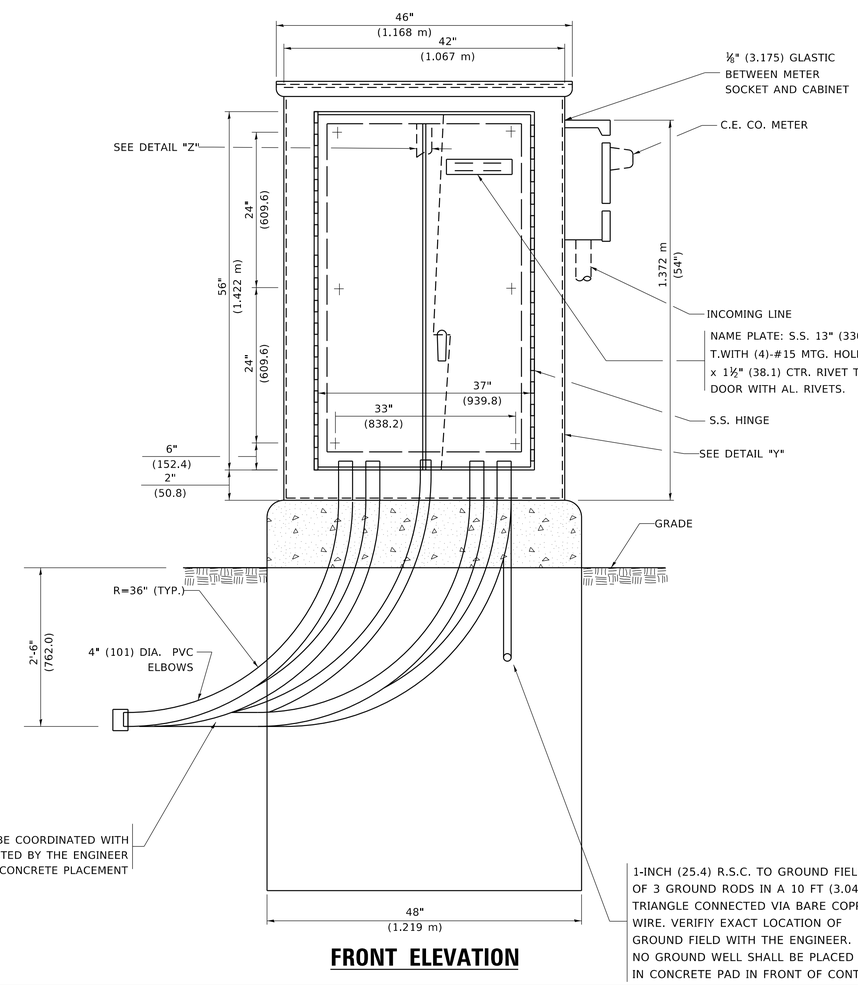

FRONT ELEVATION

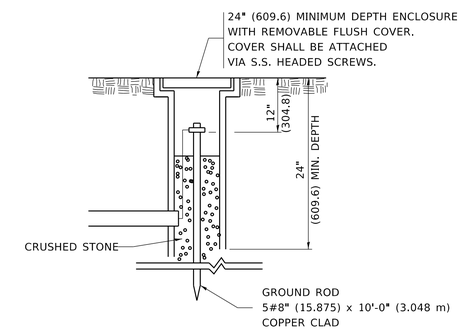

GROUND WELL DETAIL

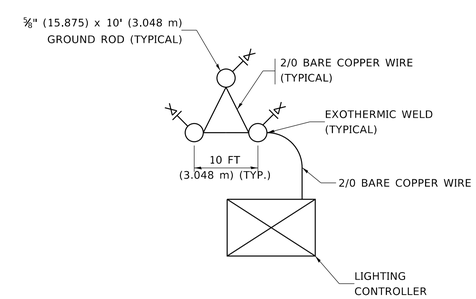

GROUND FIELD DETAIL

(N.T.S.)

THE CONTRACTOR SHALL VERIFY EXACT LOCATION WITH THE ENGINEER

E–200

USER NAME = footemj	DESIGNED -	REVISED - R. TOMSONS 03-29-12	STATE OF ILLINOIS DEPARTMENT OF TRANSPORTATION
	DRAWN - CADD	REVISED -	
PLOT SCALE = 50.0000 ' / in.	CHECKED -	REVISED -	
PLOT DATE = 4/19/2019	DATE - 12-18-02	REVISED -	

LIGHTING CONTROLLER, BASE MOUNTED
480 VOLT, 200 AMP, (DUAL)

SCALE: NONE | SHEET 3 OF 4 SHEETS | STA. | TO STA.

F.A. RTE.	SECTION	COUNTY	TOTAL SHEETS	SHEET NO.
	E–200 (BE–200)	CONTRACT NO.		
	ILLINOIS FED. AID PROJECT			

MODEL: Default
FILE NAME: pw:\\jbanroom.dot.illinois.gov:PWIDOT\Documents\IDOT Offices\District 1\Projects\Dist\d22x34\CADData\CADSheets\be200.dgn

be200.dgn 4/19/2019 2:02:15 PM User=footemj