FOUNDATION DESIGN TABLE

TYPE OF SOIL	DESIGN DEPTH OF FOUNDATION		REINFORCEMENT IN FOUNDATION			
	SINGLE ARM D	TWIN ARM D	SINGLE ARM		TWIN ARM	
			VERT BARS	SPIRAL	VERT BARS	SPIRAL
SOFT CLAY	13'-0" (3.962 m)	15'-0" (4.572 m)	8-#6X12'-6" (3.810 m)	#3X122' (37.186 m)	8-#6X14'-3" (4.343 m)	#3X141' (42.977 m)
MEDIUM CLAY	9'-6" (2.896 m)	10'-9" (3.277 m)	8-#6X9'-0" (2.743 m)	#3X90' (27.432 m)	8-#6X10'-0" (3.048 m)	#3X100' (30.480 m)
STIFF CLAY	7'-0" (2.134 m)	8'-0" (2.438 m)	8-#6X6'-6" (1.981 m)	#3X66' (20.112 m)	8-#6X7'-6" (2.286 m)	#3X76' (23.165 m)
LOOSE SAND	9'-0" (2.743 m)	10'-0" (3.048 m)	8-#6X8'-6" (2.591 m)	#3X85' (25.908 m)	8-#6X9'-6" (2.896 m)	#3X94' (28.651 m)
MEDIUM SAND	8'-3" (2.515 m)	9'-0" (2.743 m)	8-#6X8'-0" (2.438 m)	#3X78' (23.774 m)	8-#6X8'-6" (2.591 m)	#3X85' (25.908 m)
DENSE SAND	7'-9" (2.362 m)	9'-0" (2.743 m)	8-#6X7'-6" (2.286 m)	#3X73' (22.250 m)	8-#6X8'-6" (2.591 m)	#3X85' (25.908 m)
ROCK OR SOLIDIFIED SLAG	5'-0" (1.524 m)	5'-0" (1.524 m)	NONE	NONE	NONE	NONE

BILL OF MATERIAL

MARK	NO.	SIZE	LENGTH	SHAPE
a	10	6	SEE BELOW	—
s	12	4	8'-0" (2.438 m)	▭
s_1	3	3	7'-6" (2.286 m)	▭
v_1	8	6	2'-9" (0.838 m)	—
v_2				

OFFSET SCHEDULE

SEWER DIAM. d IN.	PILE OFFSET from ℄-MED'N FT.	LENGTH of BAR a FT.
UP TO 24" (609.6 mm)	3'-3" (0.991 m)	#6 x 5'-3" (1.600 m)
27" (685.8 m)TO 36" (914.4 mm)	3'-9" (1.143 m)	5'-9" (1.753 m)
42" (1066.8 mm) TO 48" (1219.2 mm)	4'-6" (1.372 m)	6'-6" (1.981 m)
54" (1371.6 mm) TO 60" (1524.0 mm)	5'-0" (1.524 m)	7'-0" (2.134 m)
66" (1676.4 mm) TO 72" (1828.8 mm)	5'-6" (1.676 m)	7'-6" (2.286 m)

NOTES

1. ALL DIMENSIONS ARE IN INCHES (MILLIMETERS) UNLESS OTHERWISE SHOWN.
2. THE ENGINEER SHALL DETERMINE THE CLASS OF SOIL DURING EXCAVATION AND SELECT THE DESIGN DEPTH OF FOUNDATION FROM THE DESIGN TABLE.
3. EXCAVATION OF THE POLE FOUNDATION SHALL BE MADE WITH AN AUGER, 24" (609.6 mm) OR 30" (762.0 mm) IN DIAMETER.
4. THE ANCHOR ROD SHALL BE A HOOK ROD TYPE. COLD BENDING OF THE ANCHOR ROD WILL NOT BE ALLOWED. THE RADIUS OF THE HOOK BEND SHALL NOT BE LESS THAN 4 TIMES THE NOMINAL DIAMETER OF THE ANCHOR ROD. A TACK WELDED ANCHOR ROD MAY BE SUBSTITUTED WITH THE APPROVAL OF THE ENGINEER.
5. THE ANCHOR BOLTS AND RACEWAYS SHALL BE PROPERLY SECURED IN PLACE BEFORE THE CONCRETE IS PLACED IN THE FORM.
6. THE ANCHOR RODS SHALL BE ACCORDING TO ASTM F1554 GRADE 725 (GRADE 105). NUTS SHALL BE HEXAGON NUTS ACCORDING TO ASTM A 194 2H OR ASTM A 563 DH, AND WASHERS SHALL BE ACCORDING TO ASTM F 436.
7. THE CONTRACTOR SHALL COORDINATE EXTENSION OF ANCHOR BOLTS ABOVE TOP OF FOUNDATION WITH THE BREAKAWAY DEVICE MANUFACTURER'S REQUIREMENTS. IF LIGHT POLE IS MOUNTED WITHOUT BREAKAWAY DEVICE, ANCHOR BOLTS SHALL PROJECT 23#4" (69.9 mm) ABOVE TOP OF THE FOUNDATION. THE CONTRACTOR SHALL CONFIRM ANCHOR BOLT EXTENTION WITH ENGINEER.
8. RACEWAYS SHALL PROJECT 1" (25.4 mm) ABOVE THE TOP OF THE FOUNDATION.
9. THE CABLE TRENCH SHALL BE BACKFILLED AND FIRMLY COMPACTED BEFORE THE LIGHT IS ERECTED.

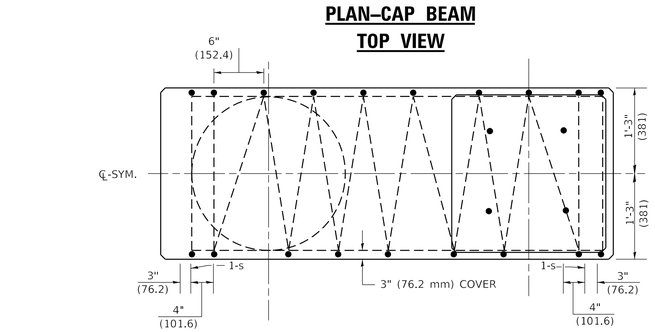

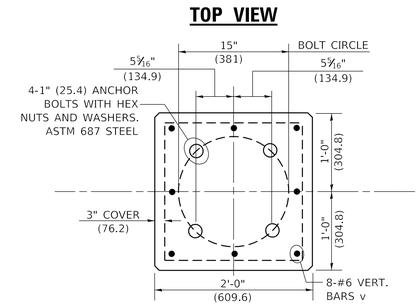

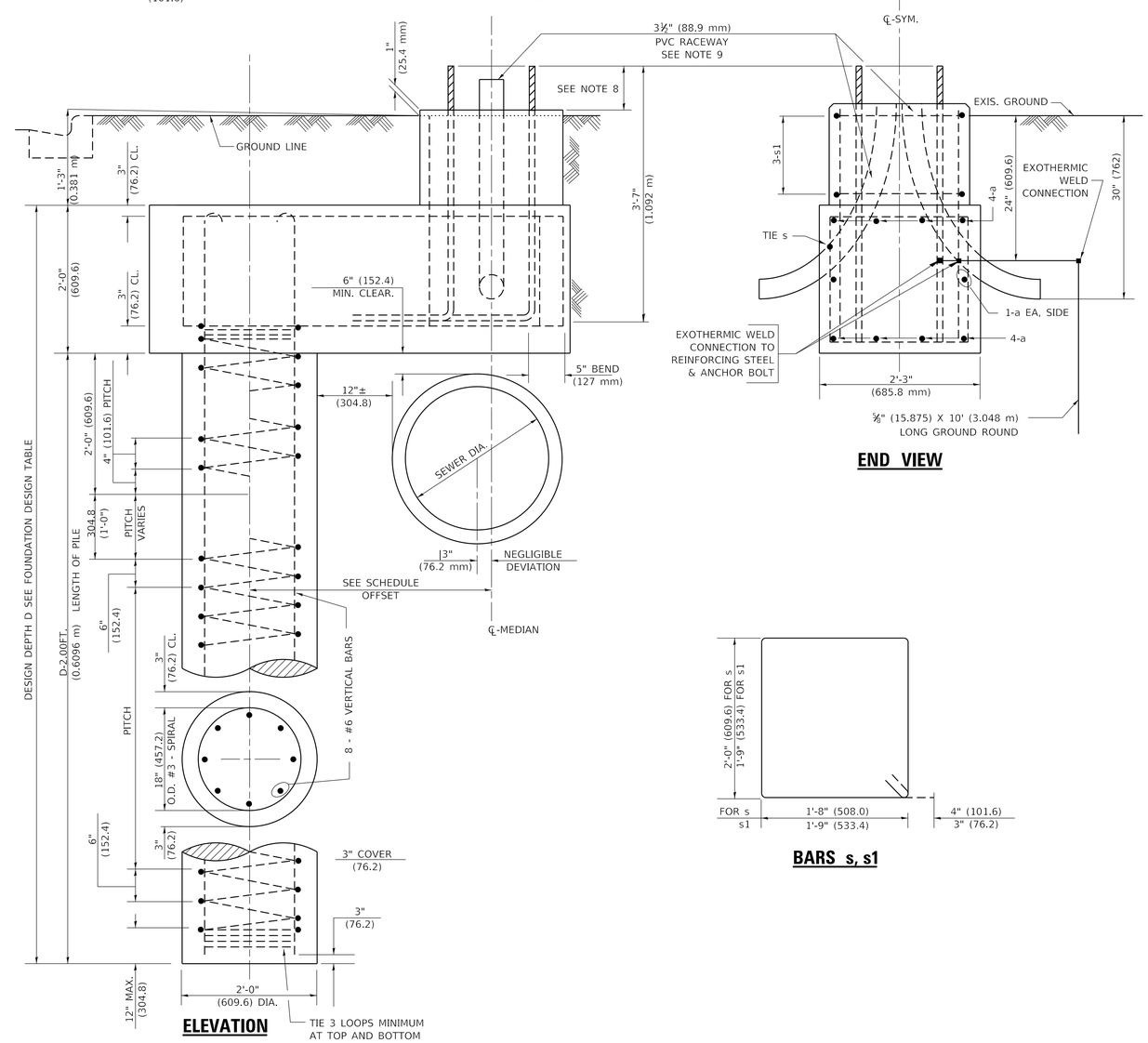

USER NAME = footemj	DESIGNED -	REVISED - R.TOMSONS 6-16-08	STATE OF ILLINOIS DEPARTMENT OF TRANSPORTATION
	DRAWN -	REVISED -	
PLOT SCALE = 50.0000 ' / in.	CHECKED -	REVISED -	
PLOT DATE = 4/19/2019	DATE -	REVISED -	

LIGHT POLE FOUNDATION OFFSET
40' (12.192m) TO 47 1/2' (14.478m) M.H., 15" (381mm) BOLT CIRCLE

SCALE: NONE | SHEET 1 OF 1 SHEETS | STA. TO STA.

F.A. RTE.	SECTION	COUNTY	TOTAL SHEETS	SHEET NO.
BE310		CONTRACT NO.		
	ILLINOIS	FED. AID PROJECT		

MODEL: Default
FILE NAME: pw:\\planroom.dot.illinois.gov:PWIDOT\Documents\IDOT Offices\District 1\Projects\District22x34\CADData\CADsheets\be310.dgn

be310.dgn 4/19/2019 2:22:02 PM User=footemj