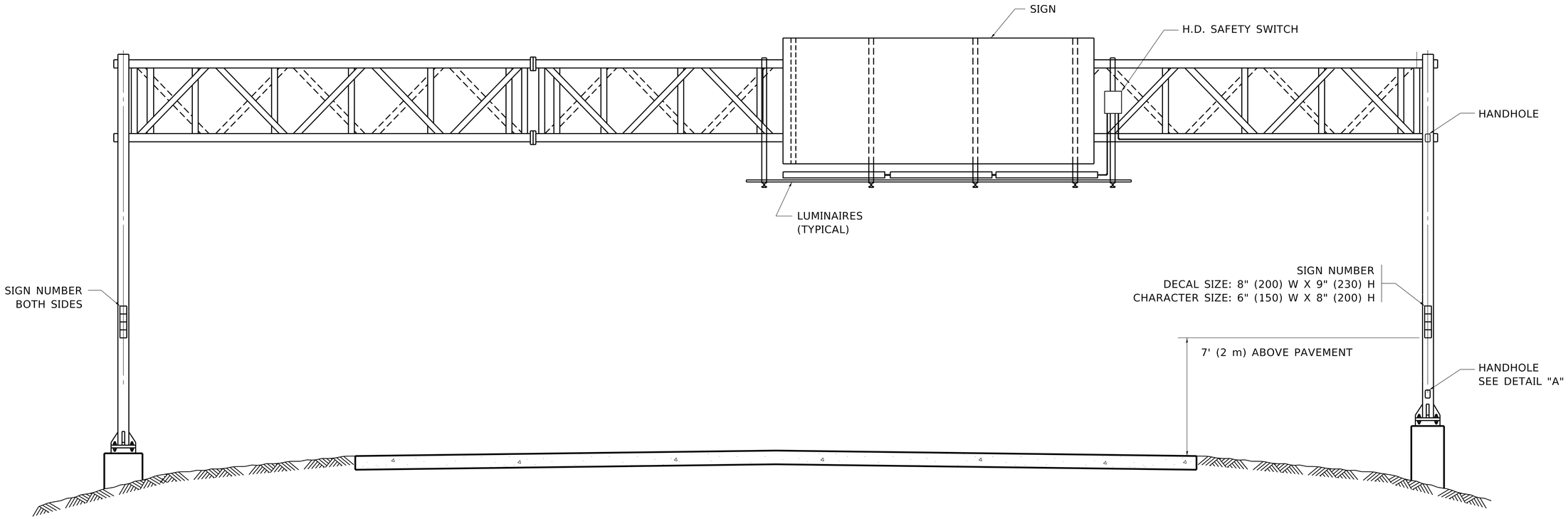

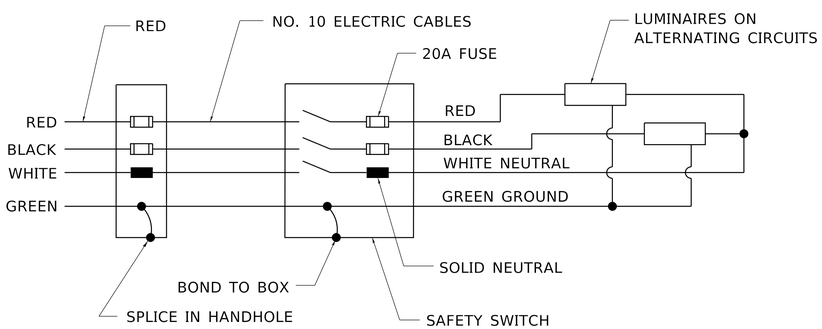

WIRING DIAGRAM

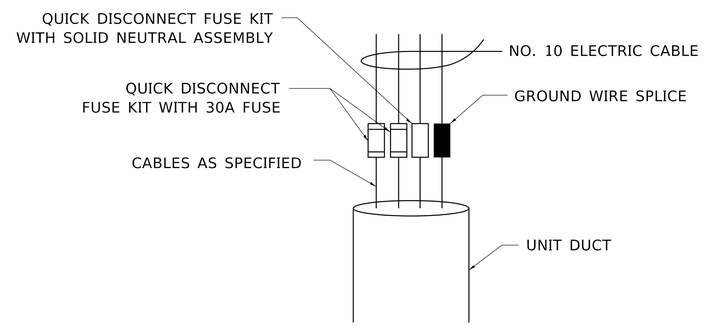

DETAIL A

NOTES:

1. ALL DIMENSIONS ARE IN INCHES (MILLIMETERS) UNLESS OTHERWISE SHOWN
2. ALL CONDUIT ATTACHED TO STRUCTURE SHALL BE GALVANIZED RIGID METALIC CONDUIT, PVC COATED (GRMC, PVC)
3. THE USE OF LIQUID TIGHT METAL CONDUIT (TYPE LFMC) SHALL BE LIMITED TO LOCATIONS WHERE MOVEMENT IS ANTICIPATED AND SHALL NOT EXCEED 5' (1.5 m) IN LENGTH
4. ALL WORK INDICATED SHALL BE INCLUDED IN THE PAY ITEM FOR ELECTRIC CONNECTION TO SIGN STRUCTURE
5. THE SAFETY SWITCH SHALL BE LOCATED ON THE SIDE OF THE SIGN STRUCTURE WHICH IS CLOSEST TO THE SHOULDER, OR EDGE OF PAVEMENT.

MODEL: Default
FILE NAME: pw:\\pbnncom.dot.illinois.gov:PWIDOT\Documents\IDOT Offices\District 1\Projects\Dist5\d22x34\CADData\CADSheets\be600.dgn

USER NAME = footemj	DESIGNED -	REVISED - 09-19-04	STATE OF ILLINOIS DEPARTMENT OF TRANSPORTATION	ELECTRIC CONNECTION TO SIGN STRUCTURE SPAN TYPE
	DRAWN -	REVISED -		
PLOT SCALE = 50.0000 ' / in.	CHECKED -	REVISED -		
PLOT DATE = 4/19/2019	DATE -	REVISED -		SCALE: NONE SHEET 1 OF 2 SHEETS STA. TO STA.

F.A. RTE.	SECTION	COUNTY	TOTAL SHEETS	SHEET NO.
BE–600		CONTRACT NO.		
	ILLINOIS	FED. AID PROJECT		

be600.dgn 4/19/2019 3:17:12 PM User=footemj