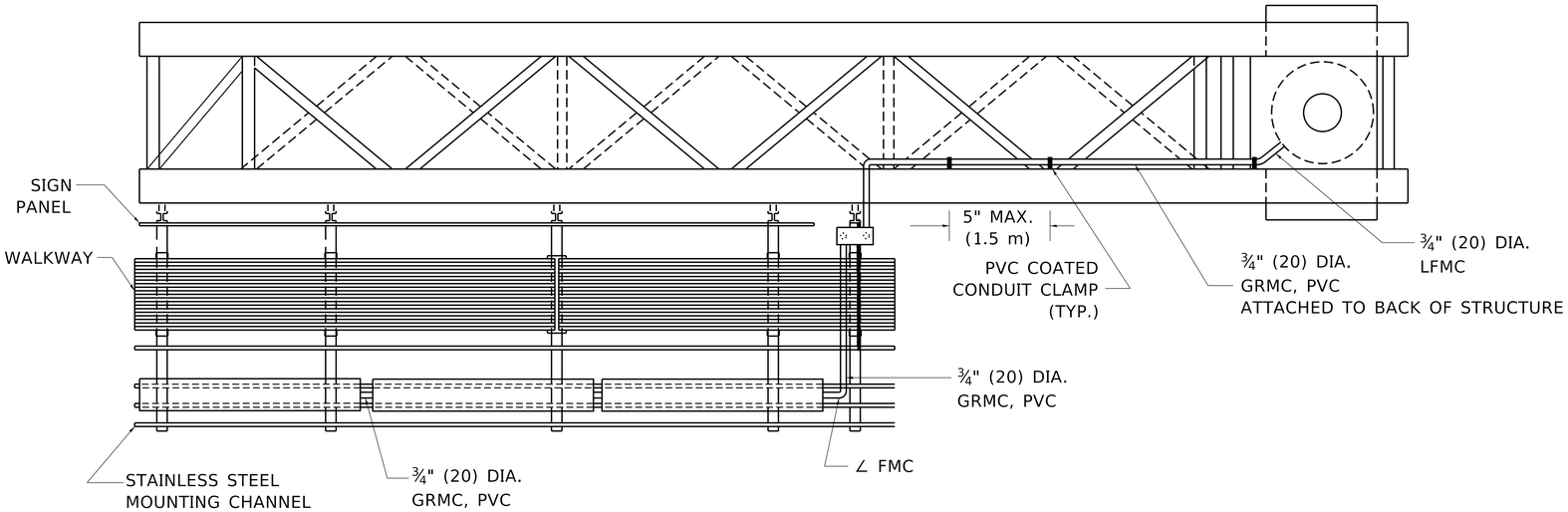

TOP VIEW

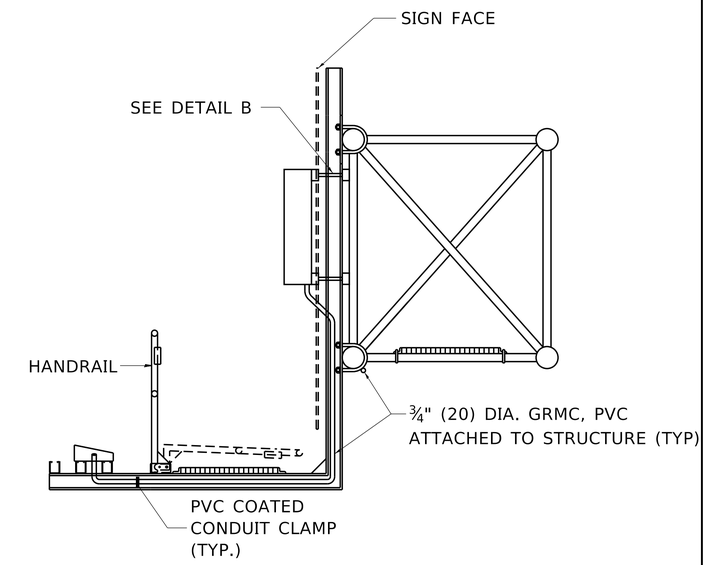

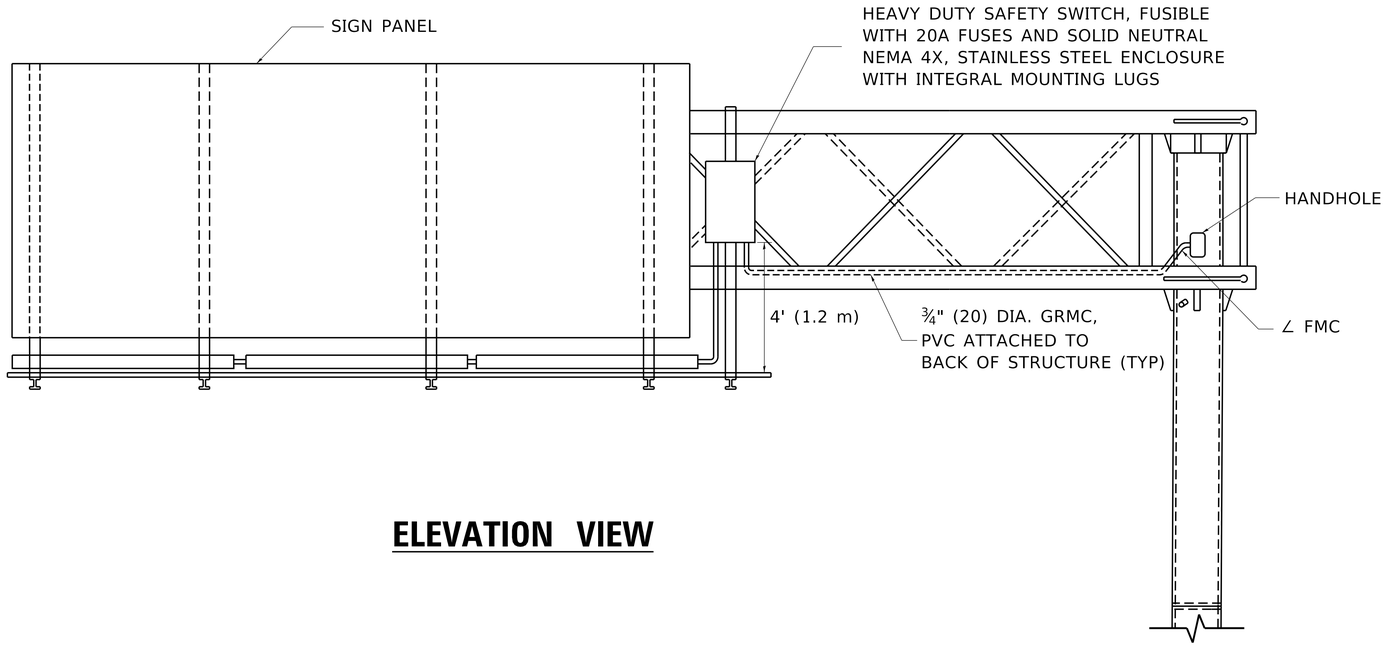

ELEVATION VIEW

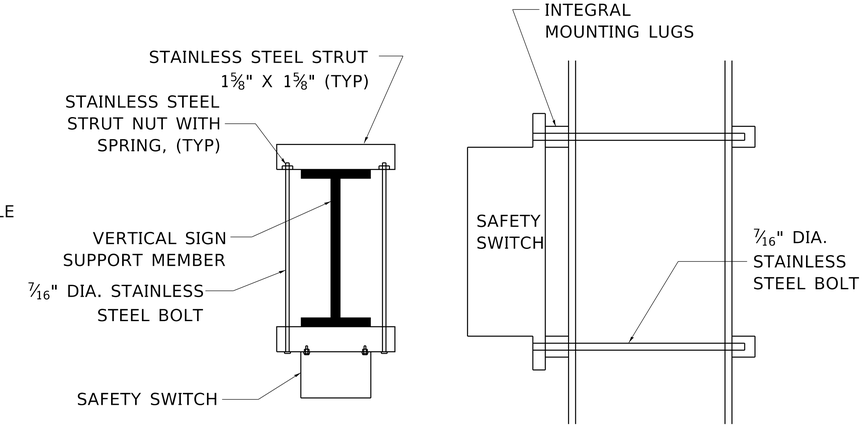

TOP VIEW

SIDE VIEW

DETAIL B

MODEL: Default
FILE NAME: pw:\\planroom.dot.illinois.gov:PWIDOT\Documents\IDOT Offices\District 1\Projects\District\d22x34\CADData\CADsheets\be601.dgn

USER NAME = footemj	DESIGNED -	REVISED - 08-19-04	STATE OF ILLINOIS DEPARTMENT OF TRANSPORTATION	ELECTRIC CONNECTION TO SIGN STRUCTURE CANTILEVER TYPE	F.A. RTE.	SECTION	COUNTY	TOTAL SHEETS / SHEET NO.
	DRAWN -	REVISED -						
PLOT SCALE = 50.0000 ' / in.	CHECKED -	REVISED -			BE-601		CONTRACT NO.	
PLOT DATE = 4/19/2019	DATE -	REVISED -		SCALE: NONE / SHEET 2 OF 2 SHEETS / STA. TO STA.		ILLINOIS	FED. AID PROJECT	

be601.dgn 4/19/2019 3:18:43 PM User=footemj