DETAILS: CHAIN LINK FENCE, SPECIAL

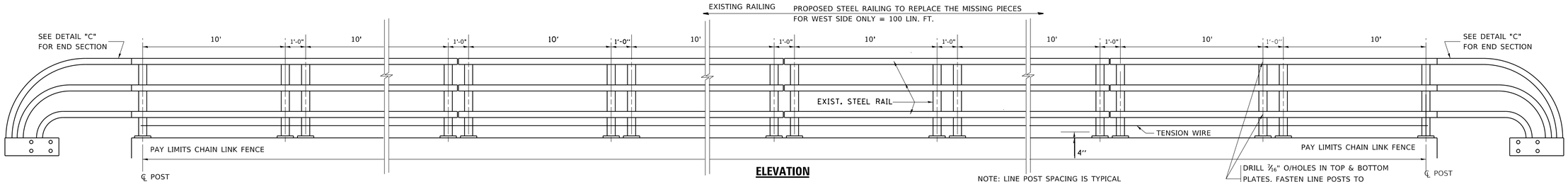

ELEVATION

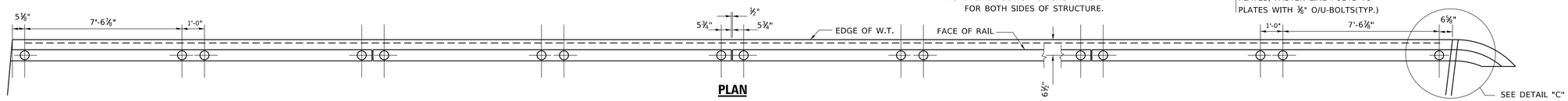

PLAN

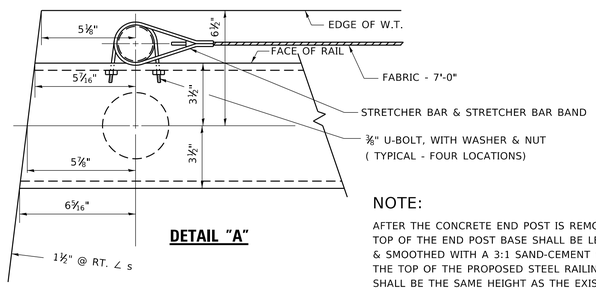

DETAIL "A"

NOTE:

AFTER THE CONCRETE END POST IS REMOVED, THE TOP OF THE END POST BASE SHALL BE LEVELED & SMOOTHED WITH A 3:1 SAND-CEMENT MIX. THE TOP OF THE PROPOSED STEEL RAILING SHALL BE THE SAME HEIGHT AS THE EXISTING METAL RAIL.

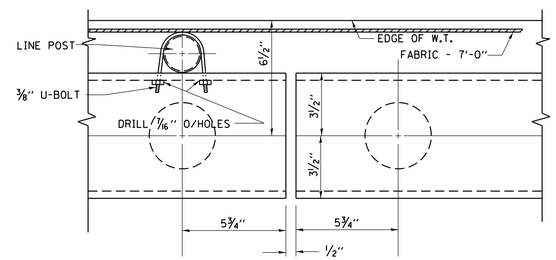

DETAIL "B"

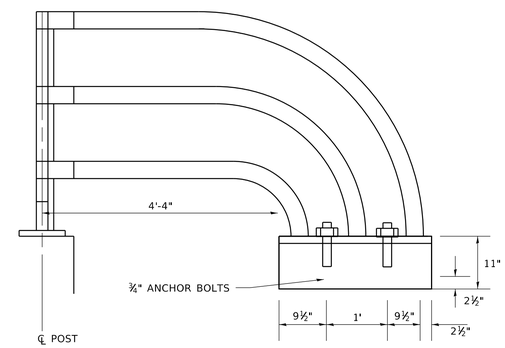

DETAIL "C"

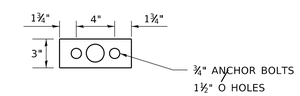

BASE PLATE
FENCE POST

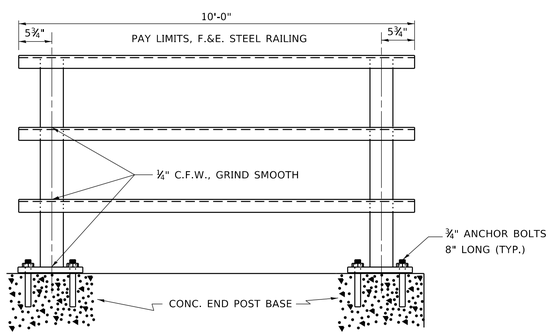

PROPOSED STEEL RAILING

NOTE:

SEAL PERIMETER OF PLATE TO CONCRETE WITH TWO COMPONENT NONSTAINING GRAY SEALING COMPOND WITH PLOYSULFIDE LIQUID POLYMERS, GUN GRADE WITH PRIMER. (INCIDENTAL)

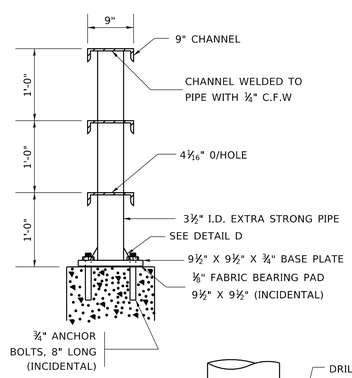

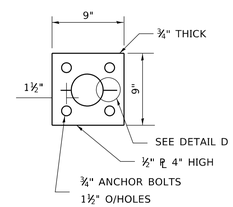

BASE PLATE

NOTE:

ENTIRE EXIST. METAL RAIL TO BE CLEANED AND PAINTED (SEE SPECIAL PROVISIONS)

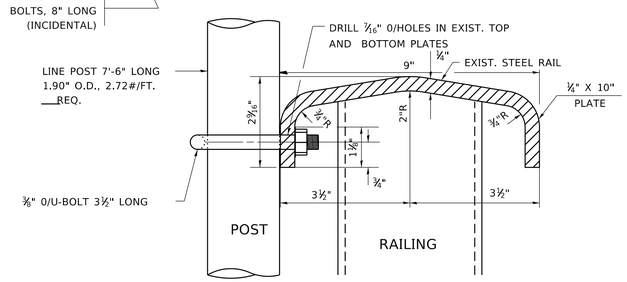

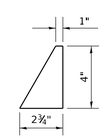

DETAIL "D"

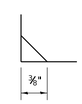

WELDING DETAIL

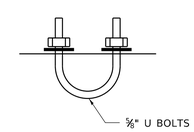

CONNECTION DETAILS

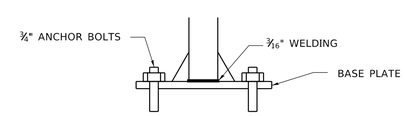

DETAIL OF WELDING PLATE AND POST

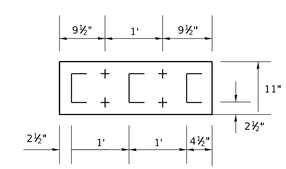

BASE PLATE
FOR DETAIL C

MODEL: Default
FILE NAME: pw:\\planroom.dot.illinois.gov:PWIDOT\Documents\IDOT Offices\District 1\Projects\DistStd22x34\CADData\CADsheets\bm01.dgn

USER NAME = footemj	DESIGNED -	REVISED - A. HOUSEH 10-29-92	STATE OF ILLINOIS DEPARTMENT OF TRANSPORTATION
	DRAWN -	REVISED - R. RITCHIE 05-02-00	
PLOT SCALE = 50.0000 ' / in.	CHECKED -	REVISED -	
PLOT DATE = 3/11/2019	DATE -	REVISED -	

STEEL RAILING

SCALE: NONE | SHEET 1 OF 1 SHEETS | STA. TO STA.

F.A. RTE.	SECTION	COUNTY	TOTAL SHEETS	SHEET NO.
	BM-01	CONTRACT NO.		
	ILLINOIS	FED. AID PROJECT		

bm01.dgn 3/11/2019 2:28:09 PM User=footemj