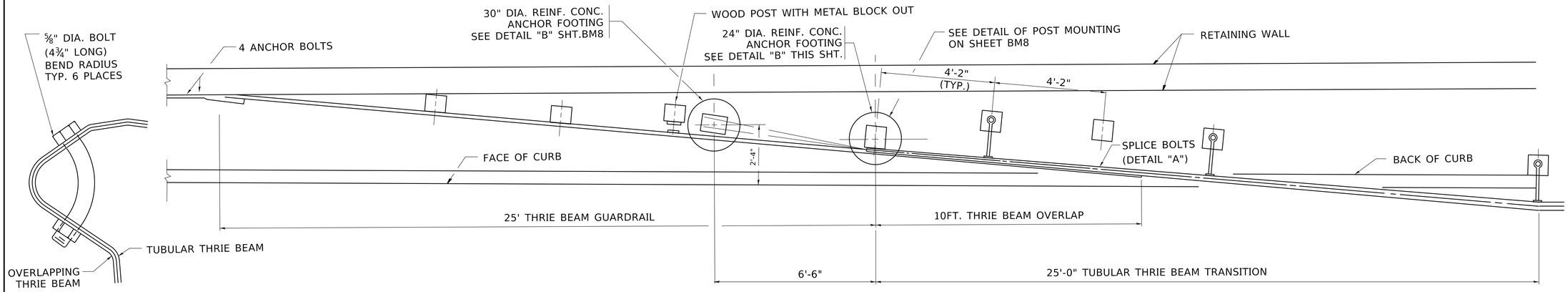

DETAIL "A"

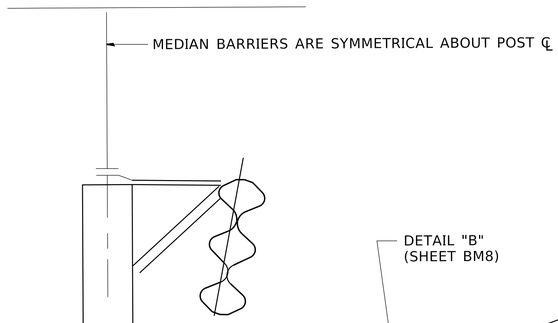

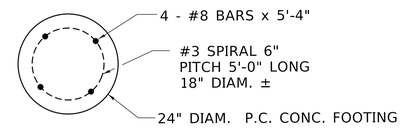

DETAIL "B"

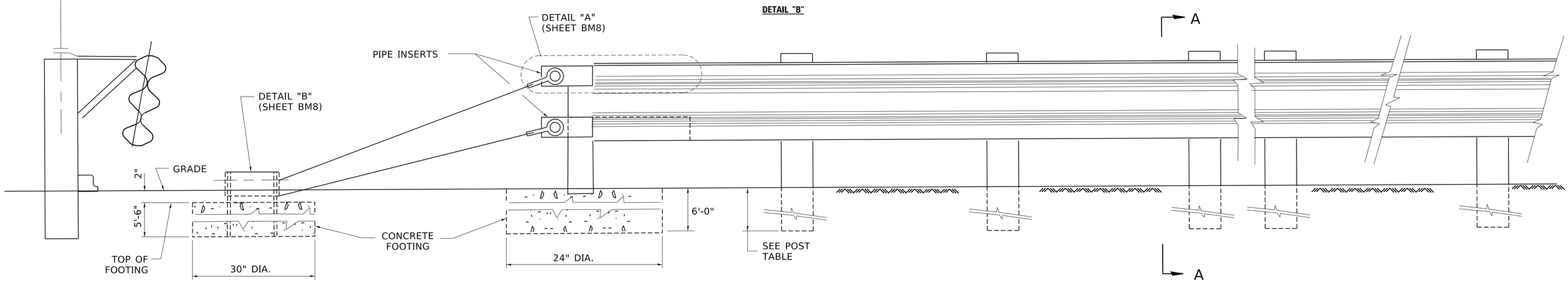

ELEVATION VIEW

SECTION A–A

POST TABLE

POST SIZE	POST SPACING	EMBEDMENT D	BEAM SUPPORT SPACING

NOTES:

1. POSTS AND POST SPACING ARE SHOWN IN POST TABLE. IT IS THE INTENT OF THIS TABLE TO PROVIDE AN OPTION FOR POSTS AND POST SPACING, THUS ALOWING FOR THE MOST ECONOMICAL SELECTION. BARRIER BEHAVIOR IS DEPENDANT ON DEVELOPMENT OF POST STRENGTH IN SOIL. EMBEDIMENT LENGTHS IN POST TABLE ARE BASED ON COMPACTED BASE MATERIAL. OTHER EMBEDIMENTS OR FOOTINGS CAN BE USED IF POST BREAKING STRENGTH IS DEVELOPED.

2. POSTS SHALL BE OF TIMBER WITH STRESS GRADE OF 1200 PSI OR MORE. TESTING SHALL BE IN ACCORDANCE WITH WEST COAST LUMBER INSPECTION BUREAU, SOUTHERN PINE INSPECTION BUREAU, OR OTHER APPROPRIATE TIMBER ASSOCIATION. POSTS SHALL BE ROUGH SAWN (UNPLANED) WITH NOMINAL DIMENSIONS INDICATED. ALL TIMBER SHALL RECIEVE PRESERVATION TREATMENT IN ACCORDANCE WITH A.A.S.H.T.O. DESIGNATION M-133.

3. BOLTS SHALL CONFORM TO REQUIREMENTS OF A.S.T.M. A307 AND NUTS TO REQUIREMENTS OF A.S.T.M. A563, GRADE "A" OR BETTER, AND BE GALVANIZED IN ACCORDANCE WITH A.S.T.M. A153, EXCEPT WHEN SPECIFIED OTHERWISE. BOLTS AND NUTS SHALL BE OF THE HEX OR HEAVY HEX TYPES. WASHERS SHALL BE MADE OF STEEL AND BE GALVENIZED IN ACCORDANCE WITH THE REQUIREMENTS OF A.S.T.M. A153.

4. WELDING SHALL CONFORM TO THE CURRENT "SPECIFICATIONS FOR WELDED HIGHWAY AND RAILING BRIDGES" OF THE AMERICAN WELDING SOCIETY, A.W.S.D. 2.0.

5. STEEL POSTS AND PLATES SHALL CONFORM TO A.S.T.M. A36 AND SHALL BE GALVANIZED IN ACCORDANCE WITH A.S.T.M. A123.

6. WIRE ROPE AND CONNECTING HARDWARE SHALL CONFORM TO THE REQUIREMENTS OF A.A.S.H.T.O. M-30, EXCEPT WHERE SPECIFIED OTHERWISE.

MODEL: Default
FILE NAME: pw:\\planroom.dot.illinois.gov:PWIDOT\Documents\IDOT Offices\District 1\Projects\District\22-34\CADData\CADsheets\bm08.dgn

USER NAME = footemj	DESIGNED -	REVISED - R. RITCHIE 05-02-00	STATE OF ILLINOIS DEPARTMENT OF TRANSPORTATION
	DRAWN - R.F.L.	REVISED -	
PLOT SCALE = 50.0000 ' / in.	CHECKED -	REVISED -	
PLOT DATE = 3/11/2019	DATE -	REVISED -	

SELF RESTORING BARRIER GUARDRAIL DETAIL

SCALE: NONE | SHEET 1 OF 1 SHEETS | STA. TO STA.

F.A. RTE.	SECTION	COUNTY	TOTAL SHEETS	SHEET NO.
	BM–08	CONTRACT NO.		
	ILLINOIS	FED. AID PROJECT		

bm08.dgn 3/11/2019 2:19:34 PM User=footemj