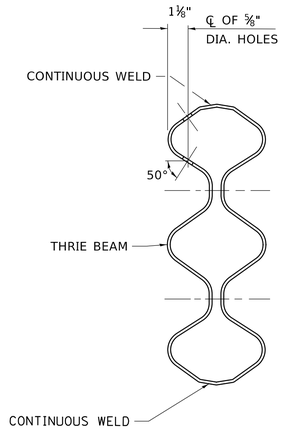

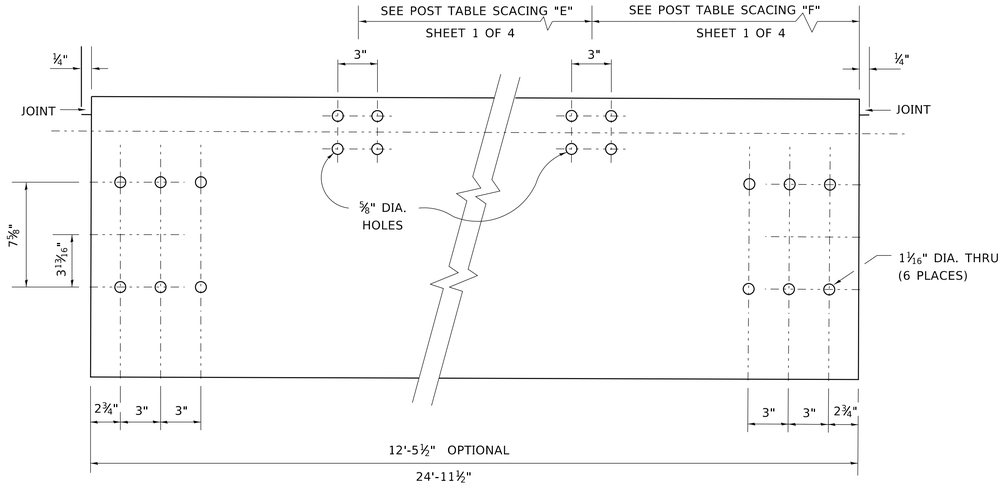

TUBULAR BEAM – 12 GAUGE

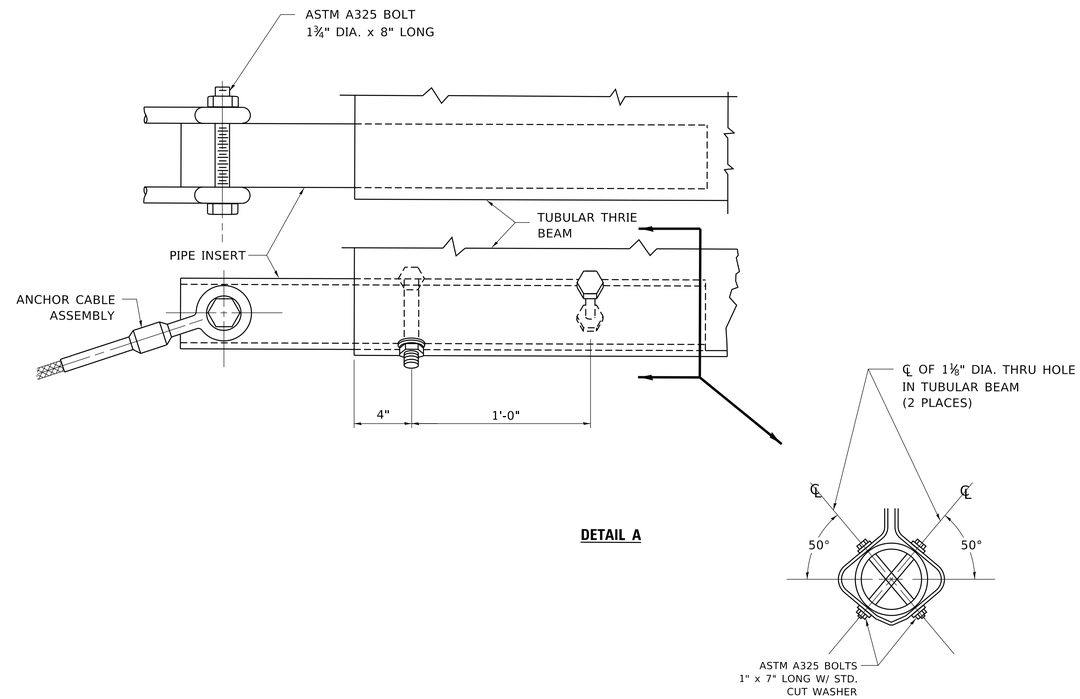

DETAIL A

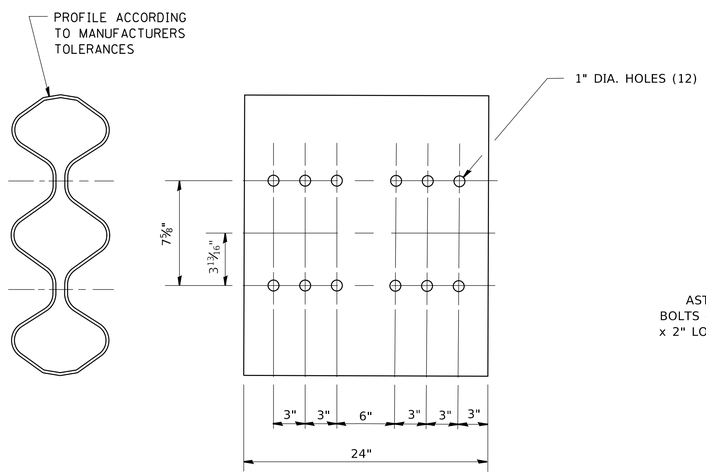

INTERNAL SPLICE – 10 GUAGE

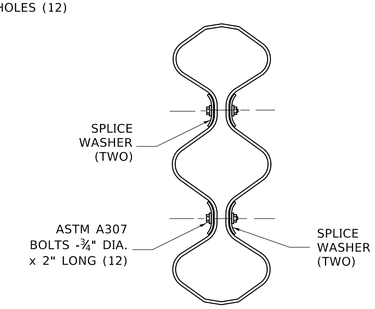

SPLICE DETAIL

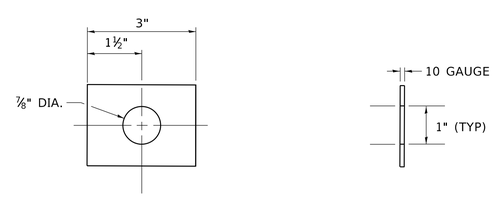

SPLICE WASHER

MODEL: Default
FILE NAME: pw:\\planroom.dot.illinois.gov:PWIDOT\Documents\IDOT Offices\District 1\Projects\DistStd22x34\CADData\CADsheets\bm08.dgn

USER NAME = footemj	DESIGNED -	REVISED - R. RITCHIE 05-02-00	STATE OF ILLINOIS DEPARTMENT OF TRANSPORTATION
	DRAWN - R.F.L.	REVISED -	
PLOT SCALE = 50.0000 ' / in.	CHECKED -	REVISED -	
PLOT DATE = 3/11/2019	DATE -	REVISED -	

SELF RESTORING BARRIER GUARDRAIL DETAIL

SCALE: NONE | SHEET 1 OF 1 SHEETS | STA. TO STA.

F.A. RTE.	SECTION	COUNTY	TOTAL SHEETS	SHEET NO.
	BM–08	CONTRACT NO.		
	ILLINOIS FED. AID PROJECT			

bm08.dgn 3/11/2019 2:20:07 PM User=footemj