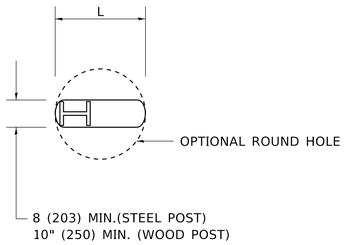

PLAN

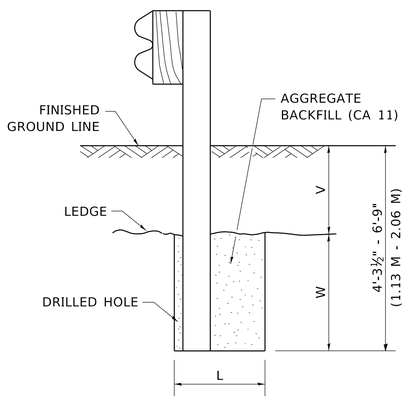

NOTE:

LEDGE LINE IS TOP OF ROCK
LEDGE OR HARD SLAG FILL.

ELEVATION

FOOTING FOR POST WHEN IMPERVIOUS MATERIAL IS ENCOUNTERED

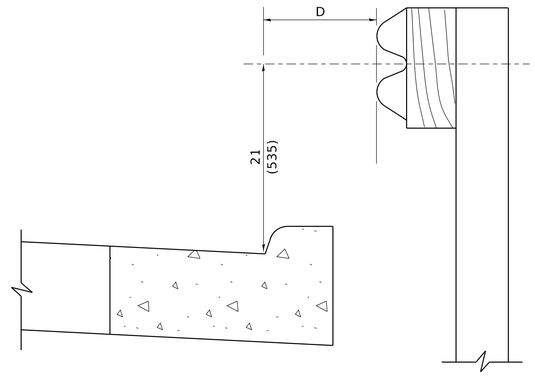

NOTE:

IF IT IS NECESSARY FOR D TO BE MORE THAN 12 (300) AND LESS THAN 10'-0" (3.0 M) TYPE M-2 (M-5) CURB AND GUTTER (STD. 606001) SHALL BE USED IN FRONT OF AND IN ADVANCE OF THE GUARDRAIL.

GUARDRAIL PLACED BEHIND CURB

(D = O DESIRABLE TO 12 (300) MAXIMUM)

V	W	L	
		STEEL POST	WOOD POST
0 - 18 (0 - 460)	24 (610)	21 (530)	23 (580)
>18 - 41.5 (> 460 - 825)	12 (305)	8 (203)	10 (250)
>41.5 - 53.5 (> 825 - 1.13 M)	12 - 0 (350 - 0)	8 (203)	10 (250)

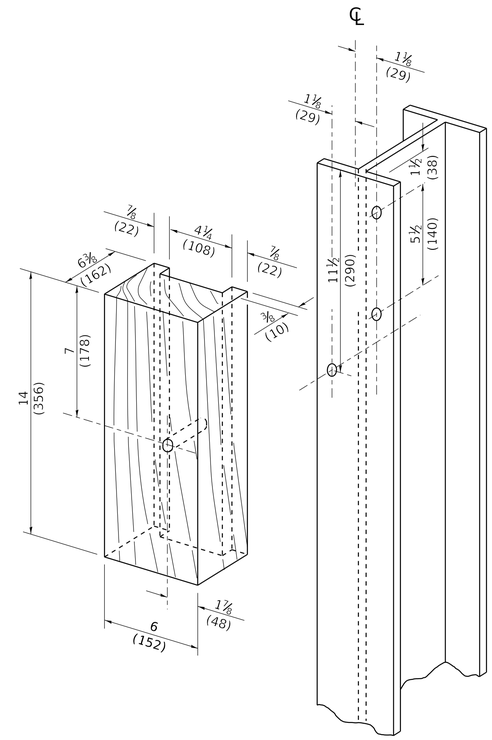

WOOD BLOCK – OUT AND STEEL POST DETAILS

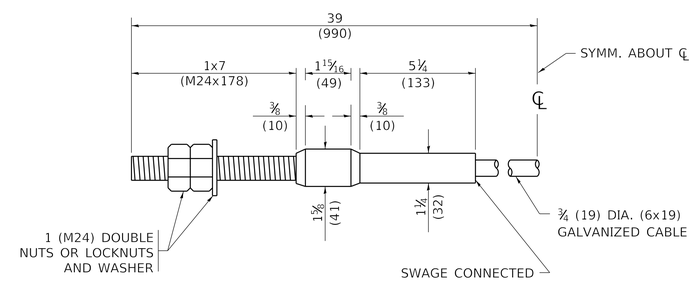

CABLE ASSEMBLY

(40,000 LBS (18,100 KG) MIN. BREAKING STRENGTH)
TIGHTEN TO TAUT TENSION

MODEL: Default
FILE NAME: pw:\\planroom.dot.illinois.gov:PWIDOT\Documents\IDOT Offices\District 1\Projects\D6t5\d22x234\CAD\data\CAD\sheets\bm21.dgn

USER NAME = footemj	DESIGNED -	REVISED -	STATE OF ILLINOIS DEPARTMENT OF TRANSPORTATION
	DRAWN -	REVISED -	
PLOT SCALE = 50.0000 ' / in.	CHECKED -	REVISED -	
PLOT DATE = 3/11/2019	DATE -	REVISED -	

REMOVE AND REERECT
STEEL PLATE BEAM GUARDRAIL

SCALE: NONE | SHEET 4 OF 4 SHEETS | STA. | TO STA.

F.A. RTE.	SECTION	COUNTY	TOTAL SHEETS	SHEET NO.
	BM-21	CONTRACT NO.		
	ILLINOIS	FED. AID PROJECT		

bm21.dgn 3/11/2019 2:14:31 PM User=footemj