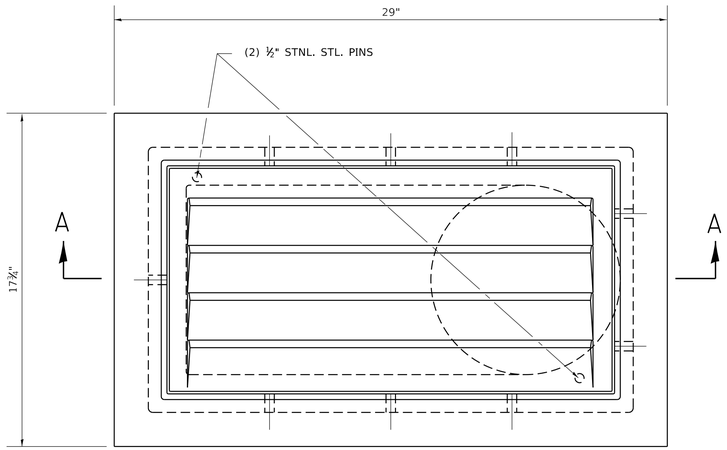

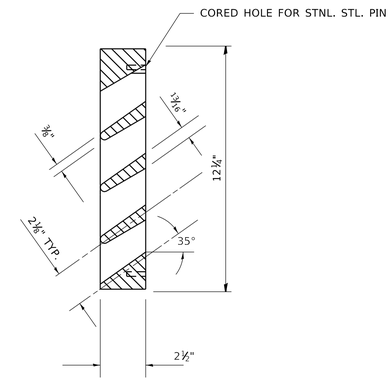

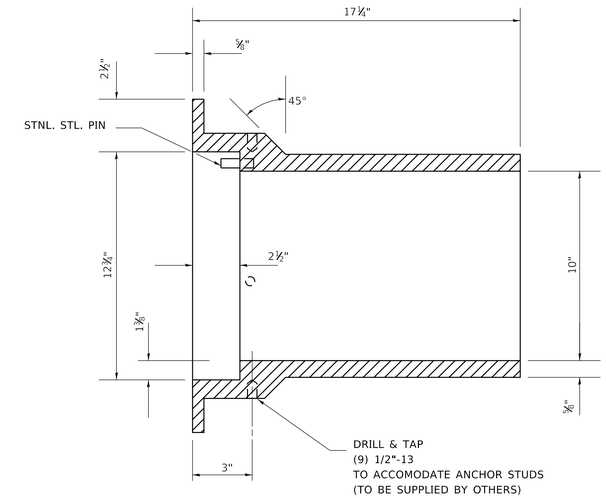

BRIDGE SCUPPER – TYPE "B"

NF - 0332 435
ESTIMATED WEIGHT 235#

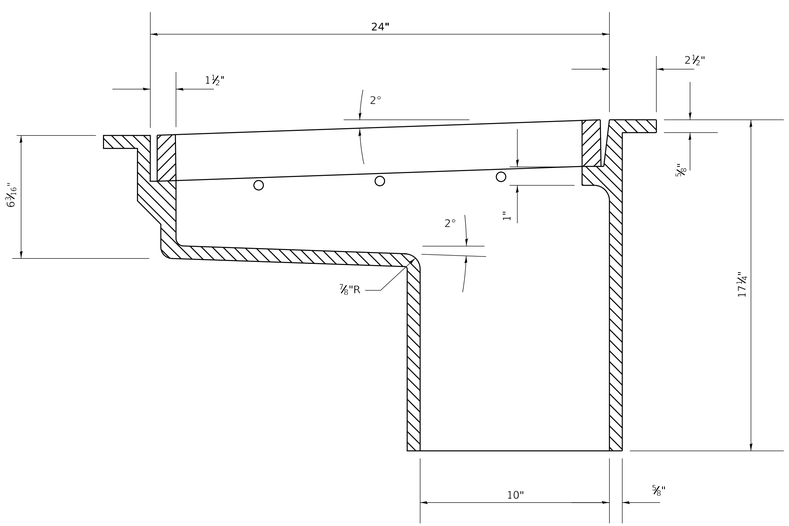

SECTION A–A

SCHEDULE OF QUANTITIES	
STRUCTURE	NO. REQUIRED
TOTAL	

MATERIAL: CAST GREY IRON ASTM A-48, CLASS 35B

FINISH: NONE

NOTE: A NEOPRENE PAD SHALL BE PROVIDED BETWEEN THE SCUPPER AND THE BEAM. (BY OTHERS.)

MODEL: Default
FILE NAME: pw:\\IL084EBIDINTEG.illinois.gov:PWIDOT\Documents\IDOT Offices\District 1\Projects\D105\d22x34\CADData\CADsheets\cs02.dgn

USER NAME = footemj	DESIGNED -	REVISED - 10-18-02	STATE OF ILLINOIS DEPARTMENT OF TRANSPORTATION
	DRAWN -	REVISED -	
PLOT SCALE = 50.0000 ' / in.	CHECKED -	REVISED -	
PLOT DATE = 3/5/2019	DATE -	REVISED -	

EXPRESSWAY UNIT DETAIL
BRIDGE SCUPPER TYPE "B"

SCALE: NONE | SHEET 1 OF 1 SHEETS | STA. TO STA.

F.A. RTE.	SECTION	COUNTY	TOTAL SHEETS	SHEET NO.
	CS-02	CONTRACT NO.		
	ILLINOIS	FED. AID PROJECT		