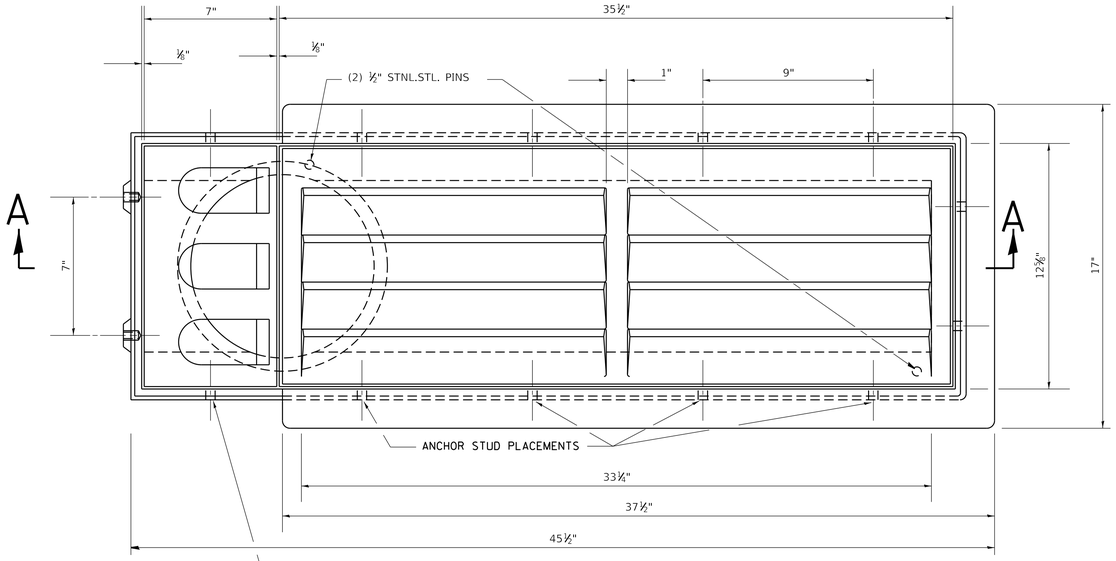

PLAN

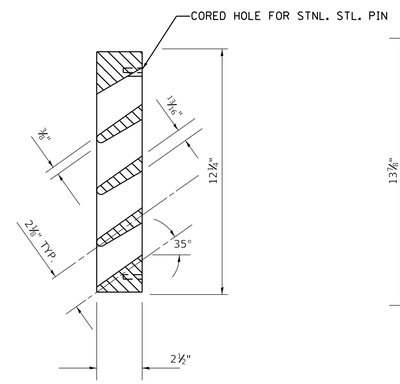

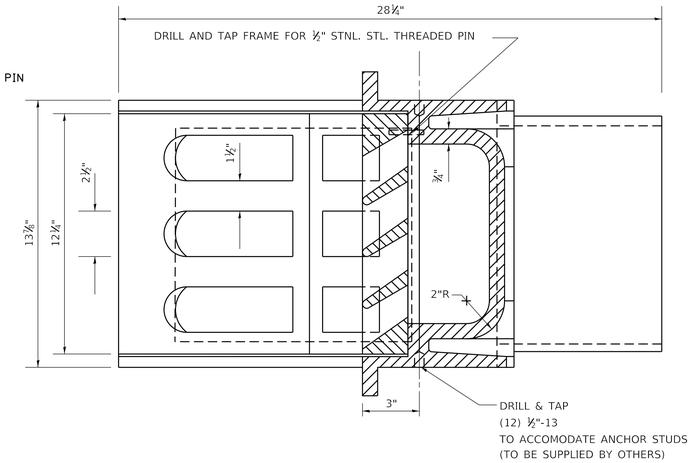

BRIDGE SCUPPER – TYPE "C"

NF - 0332 440
ESTIMATED WEIGHT 623#

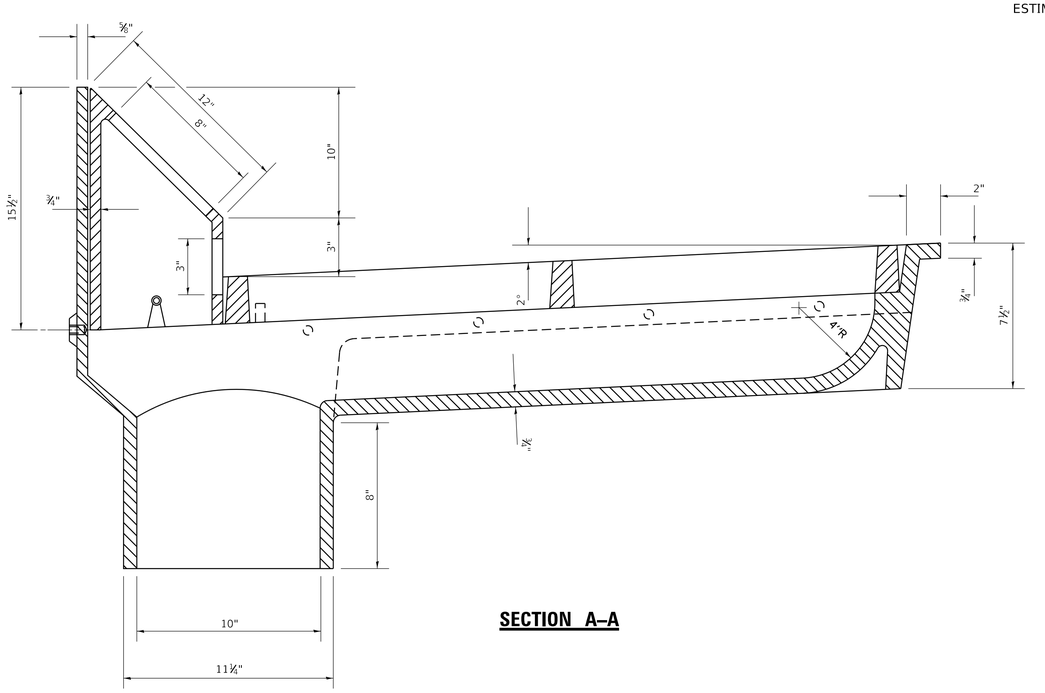

SECTION A–A

SCHEDULE OF QUANTITIES	
STRUCTURE	NO. REQUIRED