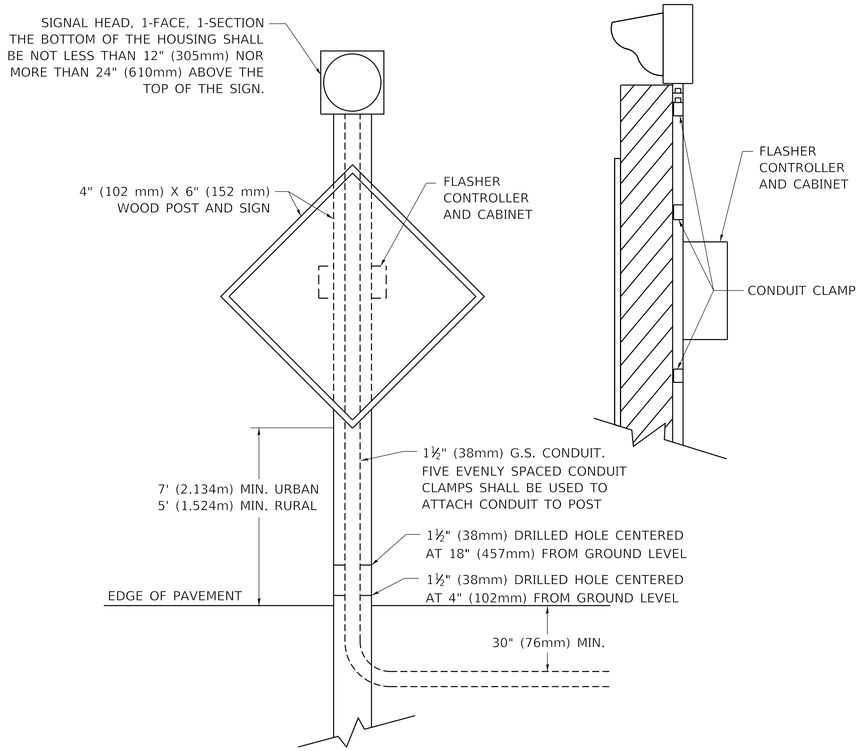

POST MOUNTED FLASHING BEACON WITH CONTROLLER AND CABINET

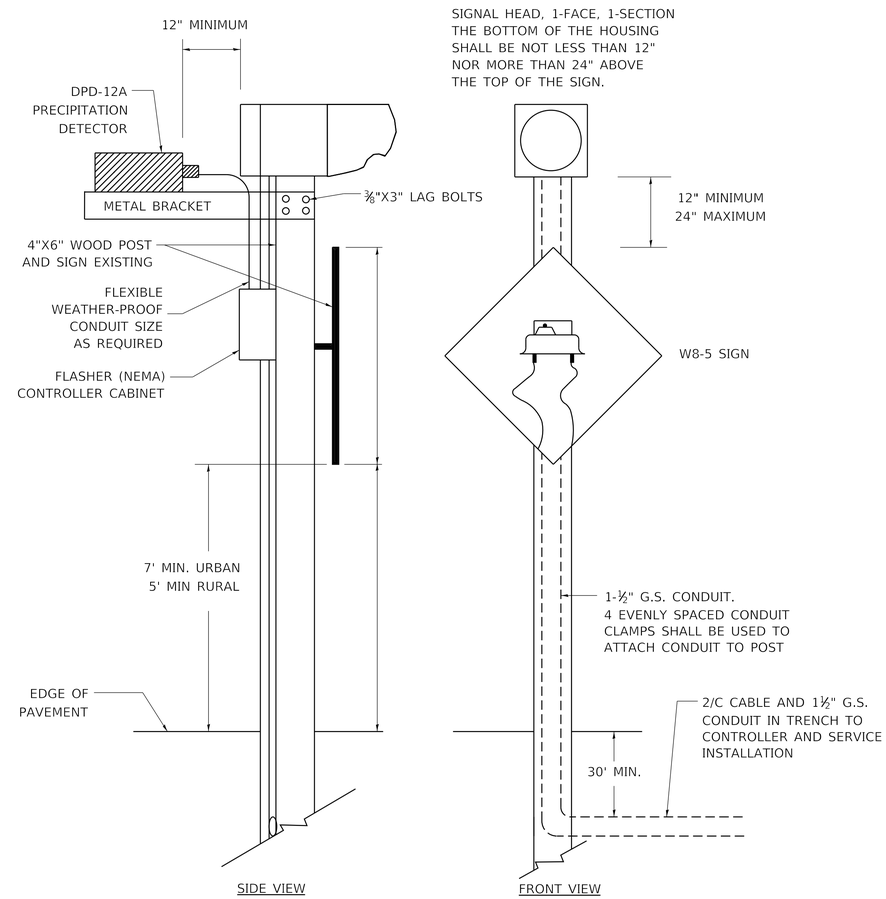

POST MOUNTED FLASHING BEACON WITH PRECIPITATION DETECTOR

MODEL: Default
FILE NAME: pw:\\IL084EBIDINTEG.illinois.gov:PWIDOT\Documents\IDOT Offices\District 1\Projects\Dist51022x34\CADData\CADsheets\ts04.dgn

USER NAME = footemj	DESIGNED - TRF	REVISED - 01-01-2007	STATE OF ILLINOIS DEPARTMENT OF TRANSPORTATION
	DRAWN - LP	REVISED - 07-01-2015	
PLOT SCALE = 50.0000 ' / in.	CHECKED -	REVISED -	
PLOT DATE = 3/4/2019	DATE -	REVISED -	

DISTRICT ONE
FLASHING BEACON INSTALLATION DETAILS

SCALE: | SHEET 1 OF 2 SHEETS | STA. TO STA.

F.A. RTE.	SECTION	COUNTY	TOTAL SHEETS	SHEET NO.
	TS–04	CONTRACT NO.		
	ILLINOIS	FED. AID PROJECT		

ts04.dgn 3/4/2019 11:12:22 AM User=footemj