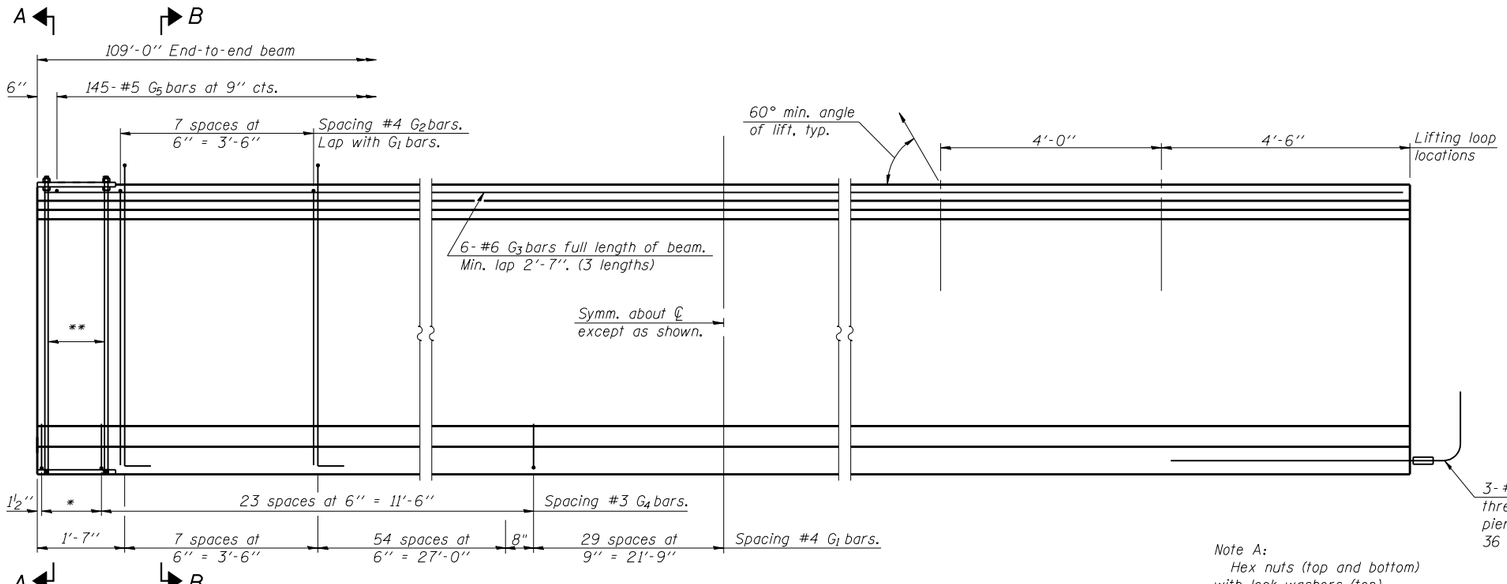

* 4 spaces at 3¼" = 1'-1".
** 5-¾" ϕ threaded dowel rods at 3¼" cts., each face.

ELEVATION OF BEAM
(Showing reinforcement & dimensions)

Note A:
Hex nuts (top and bottom) with lock washers (top). Only tighten sufficiently to compress lock washers.

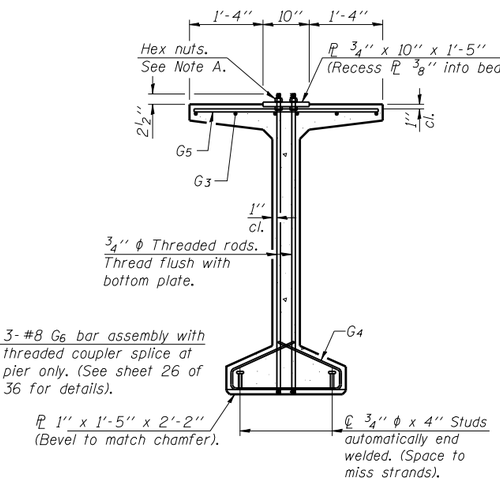

SECTION A-A

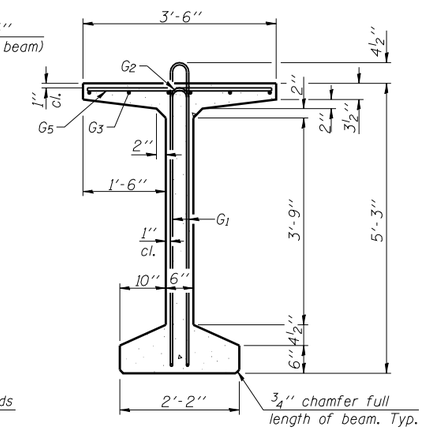

SECTION B-B

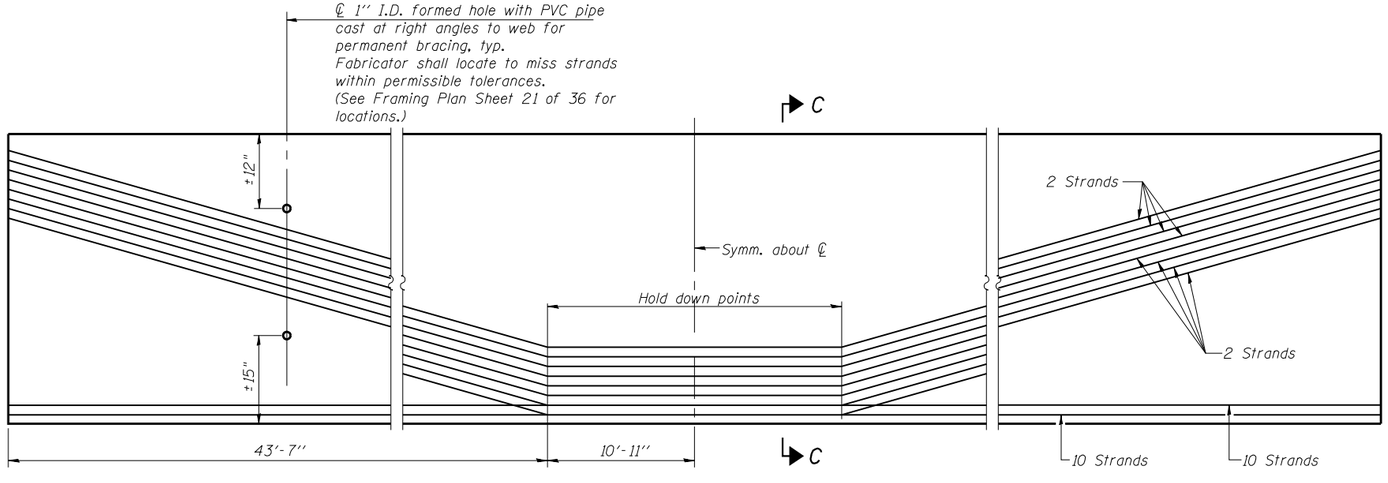

ELEVATION OF BEAM
(Showing prestressing steel)

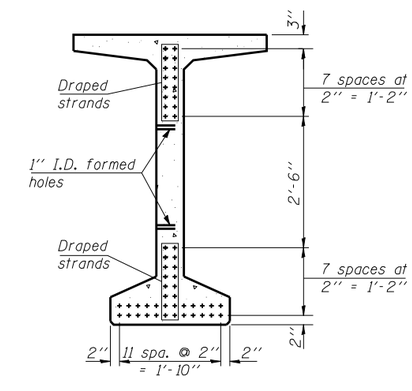

SECTION C-C

***BAR LIST
ONE BEAM ONLY

Bar	No.	Size	Length	Shape
G_1	183	#4	11'-11"	⊓L
G_2	16	#4	10'-2"	⊓
G_3	18	#6	38'-1"	—
G_4	56	#3	4'-11"	⌓
G_5	145	#5	3'-4"	—
G_6	6	#8	6'-6"	⌒

***For information only

Notes:
See sheet 26 of 36 for additional details and Bill of Material.
Required release strength, f'ci, shall be 6,000 psi.

63" PPC BULB T-BEAM SPAN 2
STRUCTURE NO. 010-0287

Coombe-Bloxdorf P.C.
-CIVIL ENGINEERS-
-STRUCTURAL ENGINEERS-
-LAND SURVEYORS-
Design Firm License No. 184-002703

PROJECT NO.	06027-3
SCALE	
DATE	8/03/09
DESIGN BY	
DRAWN BY	TFG
CHECKED BY	MCB

SHEET NO. 23
36 SHEETS

F.A.P. RTE.	SECTION	COUNTY	TOTAL SHEETS	SHEET NO.
326	(137BR)BR	CHAMPAIGN	75	43
SN 010-0287		CONTRACT NO. 70428		
FED. ROAD DIST. NO. 7	ILLINOIS	FED. AID PROJECT		

PBT-4-63 10-1-08

PLOT DATE = 9/24/2009
FILE NAME = wkCBrdgnsht-23-span-2.dgn
PLOT SCALE = 02.058794 '1" / IN.
USER NAME = JML.