STATE OF ILLINOIS
DEPARTMENT OF TRANSPORTATION

* Order d(E) & a_1(E) bars full length. Cut to fit skew and use remainder of bars in opposite end.

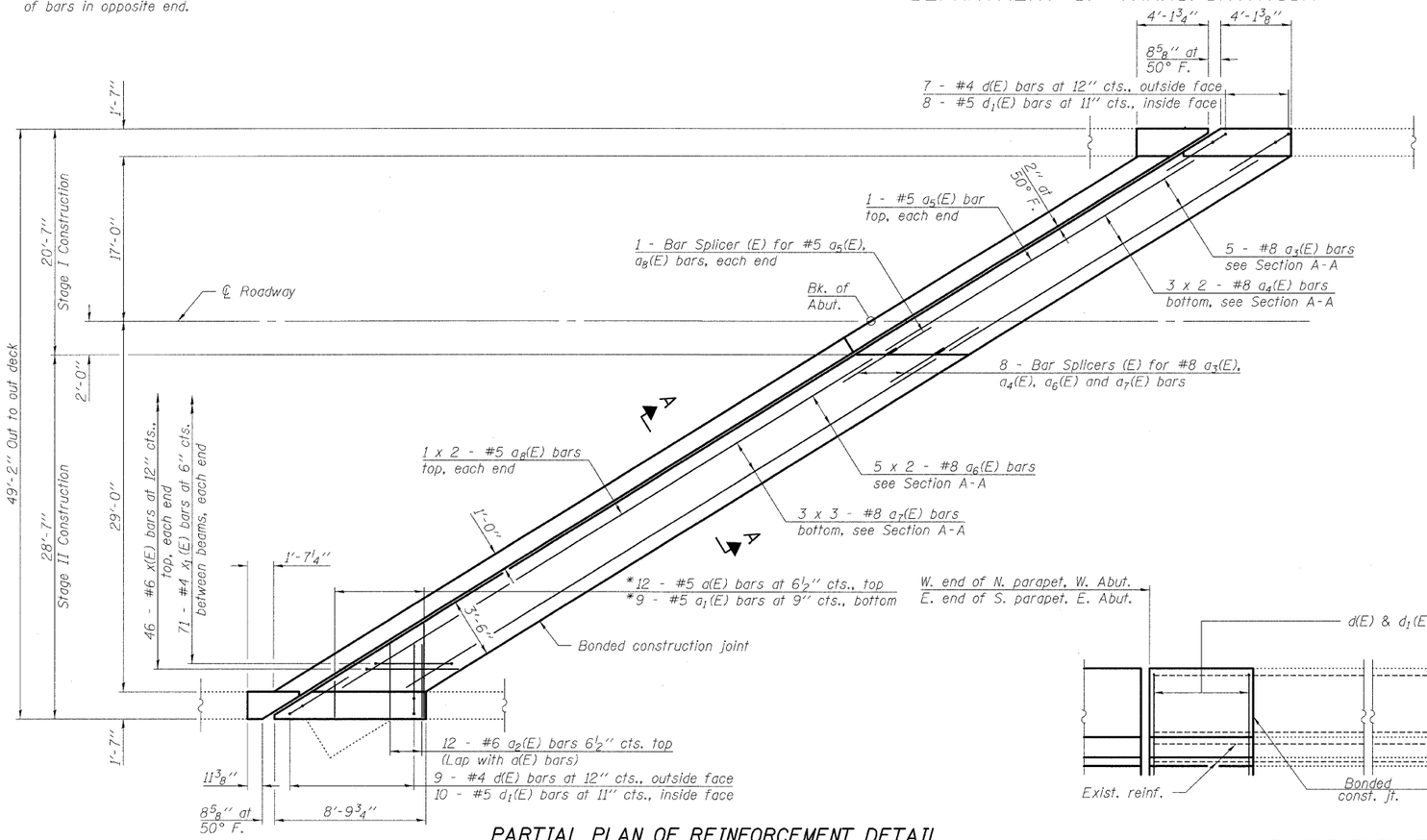

PARTIAL PLAN OF REINFORCEMENT DETAIL

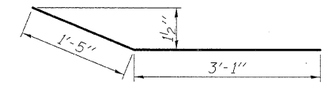

a_2(E) BAR

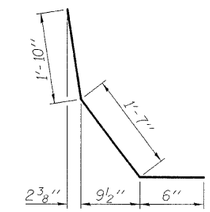

d_1(E) BAR

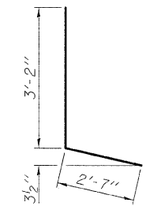

d(E) BAR

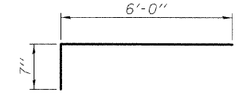

x(E) BAR

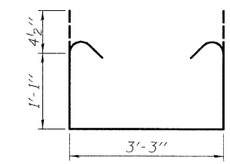

x_1(E) BAR

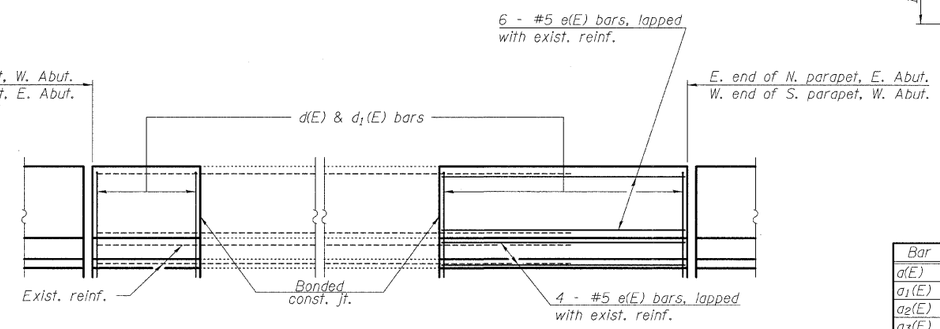

INSIDE ELEVATION OF PARAPET

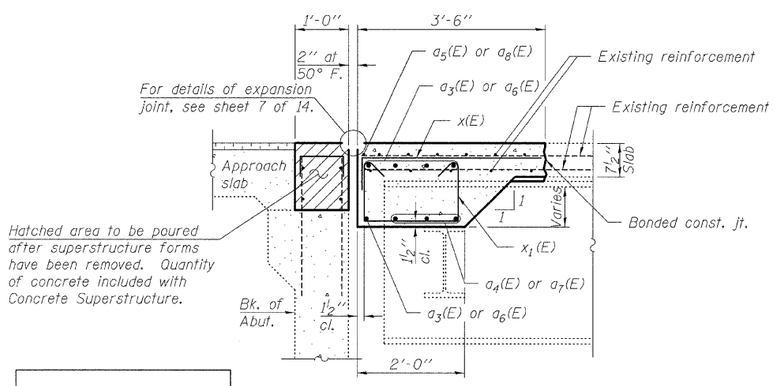

SECTION A-A
(Horz. dim. at right ∟'s)

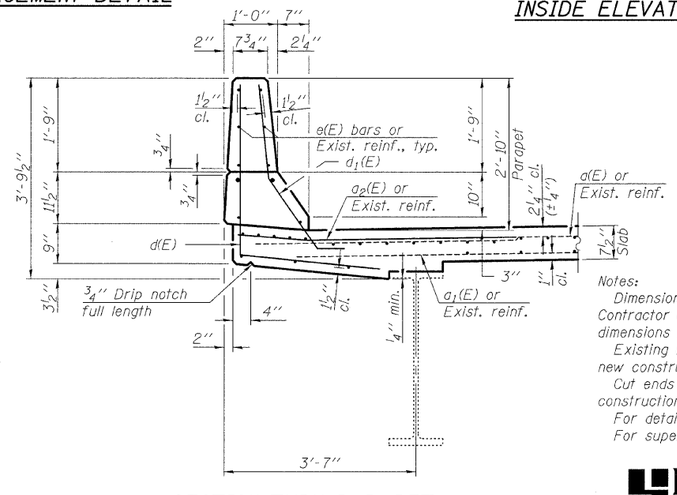

SECTION THRU PARAPET

MINIMUM BAR LAP

#5 bar = 3'-0"
#8 bar = 6'-4"

Notes:

Dimensions are based on a Rolled Rail Strip Seal Joint. If the Contractor elects to use the Welded Rail Strip Seal Joint, deck dimensions may require adjustments to satisfy the details on sheet 7 of 14.

Existing reinforcement shall be cleaned and incorporated into the new construction. Cost included with Concrete Removal.

Cut ends of existing reinforcement bars extending into new construction to maintain 1 1/2" minimum clearance.

For details of Bar Splicers, see sheet 14 of 14.

For superstructure Concrete Removal details, see sheet 5 of 14.

SUPERSTRUCTURE BILL OF MATERIAL TWO STRUCTURES

Bar	No.	Size	Length	Shape
a(E)	24	#5	6'-6"	
a_1(E)	18	#5	6'-5"	
a_2(E)	48	#6	4'-6"	
a_3(E)	20	#8	31'-8"	
a_4(E)	24	#8	18'-10"	
a_5(E)	4	#5	37'-8"	
a_6(E)	40	#8	28'-3"	
a_7(E)	36	#8	19'-9"	
a_8(E)	8	#5	28'-0"	
d(E)	64	#4	5'-9"	∟
d_1(E)	72	#5	3'-11"	∟
e(E)	40	#5	6'-3"	
x(E)	184	#6	6'-7"	⌐
x_1(E)	284	#4	6'-2"	⊔
Concrete Removal			Cu. Yds.	88.2
Reinforcement Bars, Epoxy Coated			Pound	12,610
Concrete Superstructure			Cu. Yds.	88.9

Bars indicated thus 3 x 3 - #8 etc. indicates 3 lines of bars with 3 lengths per line.

SUPERSTRUCTURE REPAIR DETAILS
STRUCTURE NO. 060-0012 (E.B.)
STRUCTURE NO. 060-0013 (W.B.)

DESIGNED	EML
CHECKED	JJD
DRAWN	EML
CHECKED	JJD

HORNER & SHIFRIN, INC. ENGINEERS

SHEET NO. 6	F.A.I. RTE.	SECTION	COUNTY	TOTAL SHEETS	SHEET NO.
14 SHEETS	70	60-(5,6,7)RS, 60-(6,7)BR	MADISON	185	120
			CONTRACT NO. 76C56		
	FED. ROAD DIST. NO.	ILLINOIS	FED. AID PROJECT		