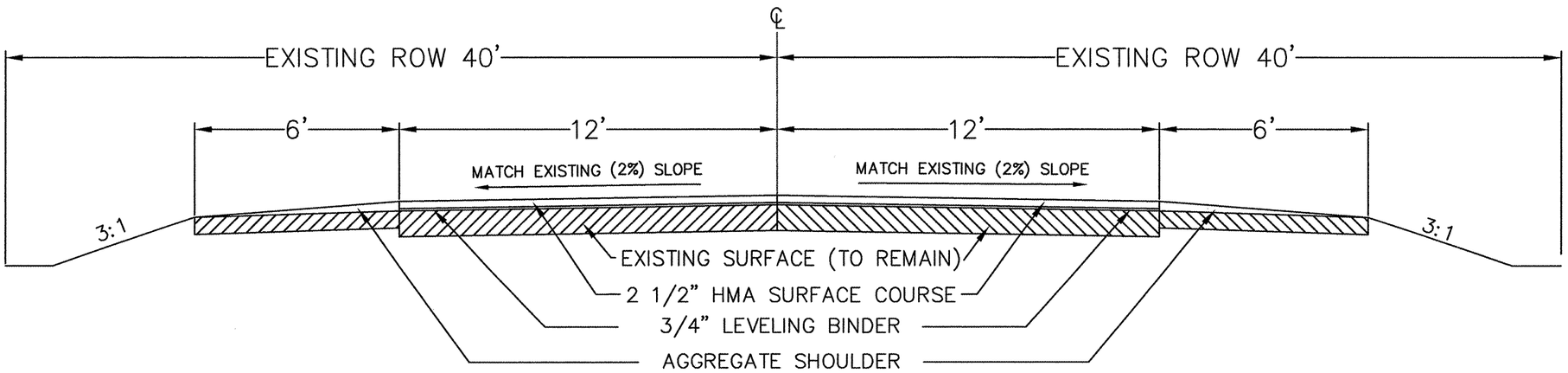

SECTION 06-00383-00-RS
COUNTY HIGHWAY 52 (WILLOWBROOK ROAD)
STA. 300+00 TO STA. 342+67

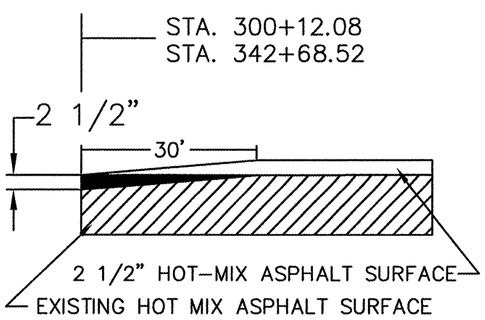

TYPICAL BUTT JOINT

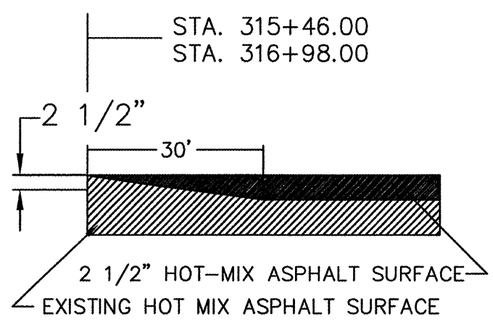

BRIDGE SURFACE REMOVAL

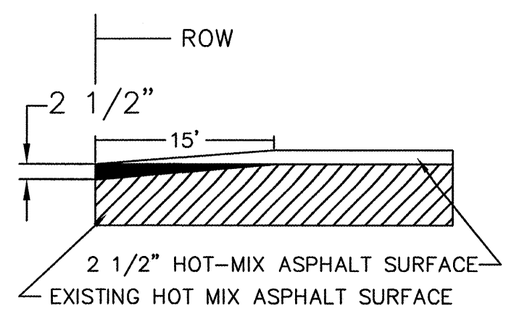

SIDE STREETS
PRIVATE ENTRANCES