LEGEND

- R — STRUCTURE TO BE REMOVED
- ADJ — STRUCTURE TO BE ADJUSTED
- REL — STRUCTURE TO BE RELOCATED
- /// — STORM SEWER REMOVAL

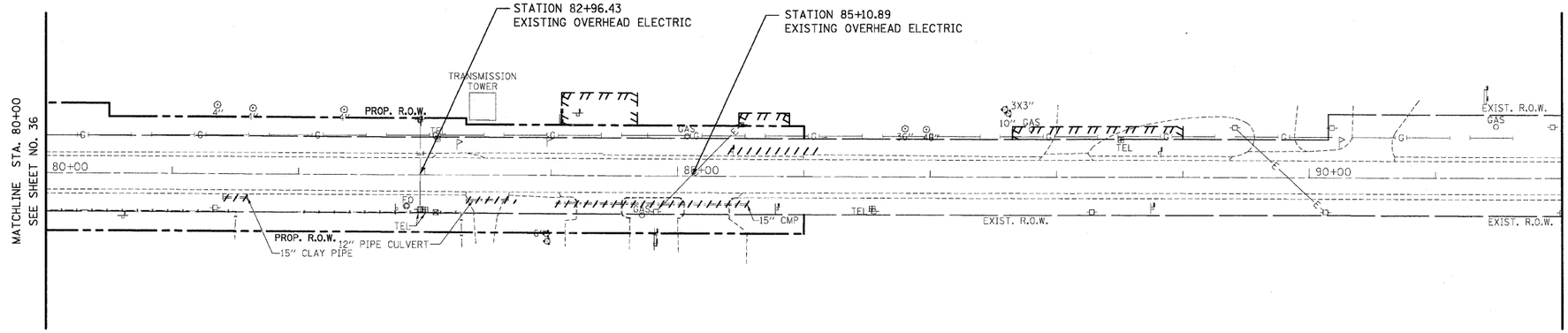

EXISTING VIEW

NOTES

1. OFFSETS OF CULVERTS AND SKEW ANGLES ARE PROVIDED ON THE SCHEDULE OF QUANTITES

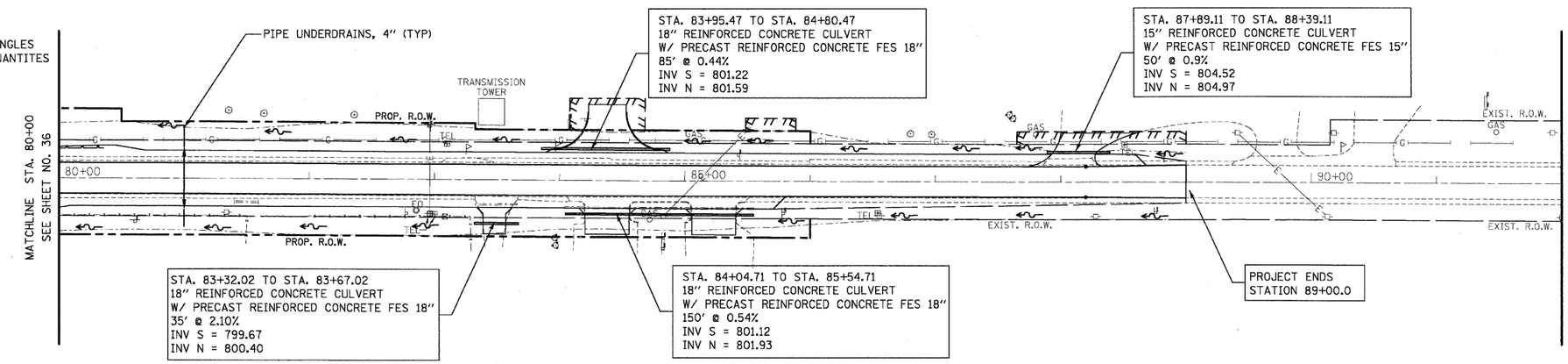

1"=50' SCALE 50 0 50 100 FEET

PROPOSED VIEW

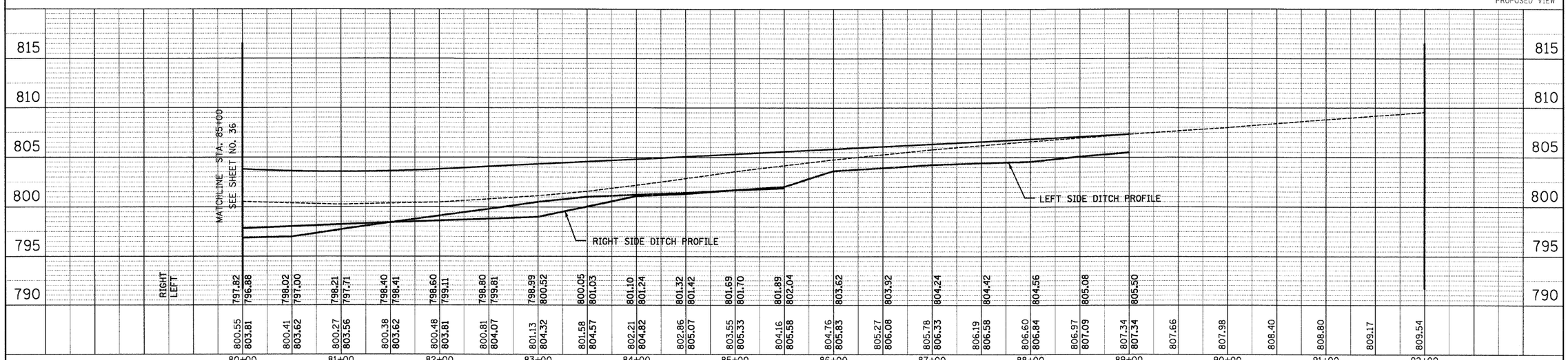

FILE NAME = $FILEL$	USER NAME = $USER$	DESIGNED - GJM	REVISED - 5/13/2008	STATE OF ILLINOIS DEPARTMENT OF TRANSPORTATION	DRAINAGE AND UTILITIES	F.A.P. RTE. 324	SECTION 23B-1	COUNTY MCHENRY
		CHECKED - EJL	REVISED - 7/18/2008					TOTAL SHEETS 97 / SHEET NO. 37
	PLOT SCALE = $SCALE$	DRAWN - GJM	REVISED -					CONTRACT NO. 62892
	PLOT DATE = 7/17/2008	CHECKED - EJL	REVISED -		SCALE: 1" = 50' / SHEET NO. 3 OF 3 SHEETS / STA. 80+00 TO STA. 92+00	FED. ROAD DIST. NO. 1	ILLINOIS	FED. AID PROJECT

PLAN — NOTE BOOK NO. ____ — SURVEYED / PLOTTED / ALIGNMENT CHECKED / R.O.W. CHECKED / CADD FILE NAME — BY — DATE

PROFILE — NOTE BOOK NO. ____ — SURVEYED / PLOTTED / GRADES CHECKED / B.M. NOTED / STRUCTURE NOTATNS CHKD — BY — DATE

...\Mstn\FINAL\UTL307264.dgn 7/17/2008 4:11:04 PM