ROUTE NO.	SECTION	COUNTY	TOTAL SHEETS	SHEET NO.
FAS 253	*	MARSHALL	97	50
STA		TO STA		
FED. ROAD DIST. NO. 4	ILLINOIS	FED. AID PROJECT-		
*68(BR,BR-1)		DWG. NO. 6 OF 9		

CONTRACT NO. 68573

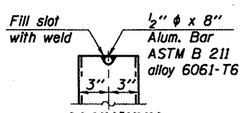

ALUMINUM TUBE

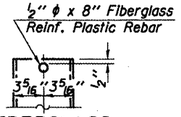

FIBERGLASS PIPE

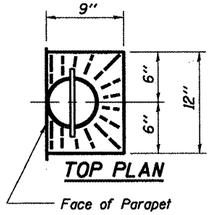

TOP PLAN

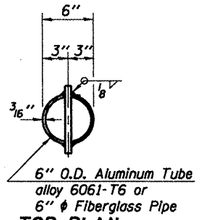

TOP PLAN
(Showing Aluminum Tube)

FLOOR DRAIN DETAILS

Notes:
Fiberglass pipe shall conform to ASTM D2996, with short-time rupture strength hoop tensile stress of 30,000 p.s.i. minimum. The surface of the Fiberglass pipe shall be free of bond inhibiting agents.
The exterior surfaces of the Fiberglass Floor Drains shall be cleaned and given a washcoat pretreatment in accordance with Steel Structures Painting Council's Spec. SSPC-SPI & SSPC-Paint 27 prior to painting with a vinyl enamel coat. The color shall be light grey Munsell No. 10Y 7/1. Painting of the Fiberglass Floor Drains will not be required when the exterior surfaces of the furnished drains are coated by the manufacturer with a pigment that matches the color of the concrete slab.

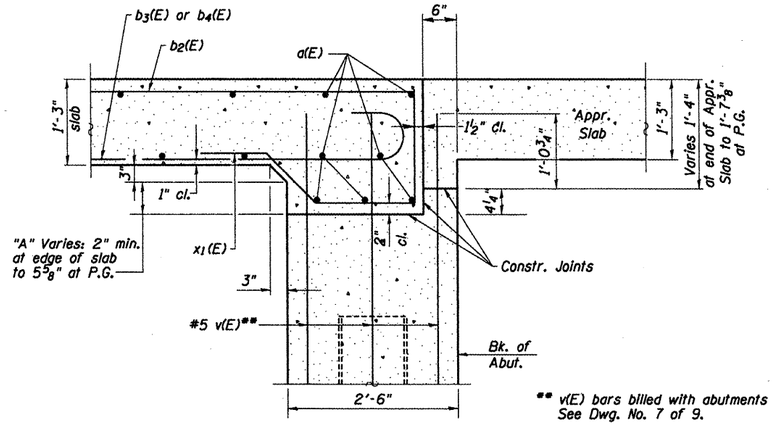

** v(E) bars billed with abutments See Dwg. No. 7 of 9.

SECTION A-A

DIMENSION "A"

	Pier 1	Pier 2
West edge of superstructure	2"	2"
West edge of roadway	3⅜"	3⅜"
℄ Roadway & P.G.	5⅝"	5⅝"
East edge of roadway	3⅜"	3⅜"
East edge of superstructure	2"	2"

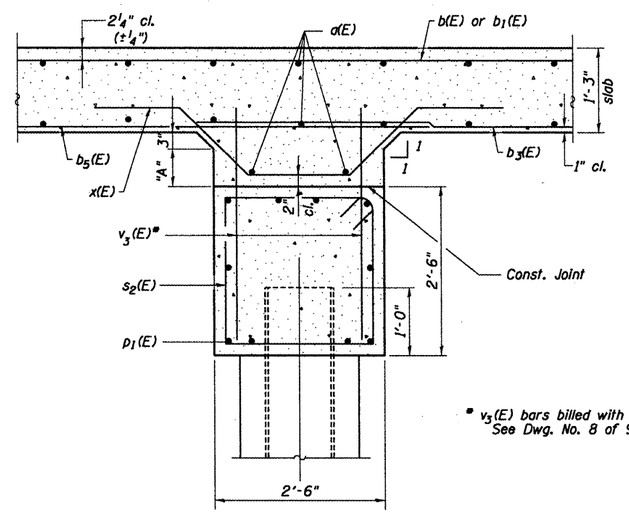

* v3(E) bars billed with piers See Dwg. No. 8 of 9.

SECTION B-B

ESCA CONSULTANTS, INC.

DESIGNED BY:	ELH	11/05
DRAWN BY:	DWH	11/05
CHECKED BY:	ELH	05/06
APPROVED BY:	RDP	05/06

SUPERSTRUCTURE DETAILS
IL ROUTE 251 OVER
SANDY CREEK
FAS ROUTE 253 - SECTION 68(BR,BR-1)
MARSHALL COUNTY
STATION 166+20
STRUCTURE NO. 062-0071