| ROUTE NO. | SECTION | COUNTY | TOTAL SHEETS | SHEET NO. |
|---|---|---|---|---|
| F.A.I. 55 | (68-4)F | MONTGOMERY | 25 | 18 |
| FED. ROAD DIST. NO. 7 | ILLINOIS | FED. AID PROJECT- | | |

SHEET NO. 16
23 SHEETS

Contract #72C32

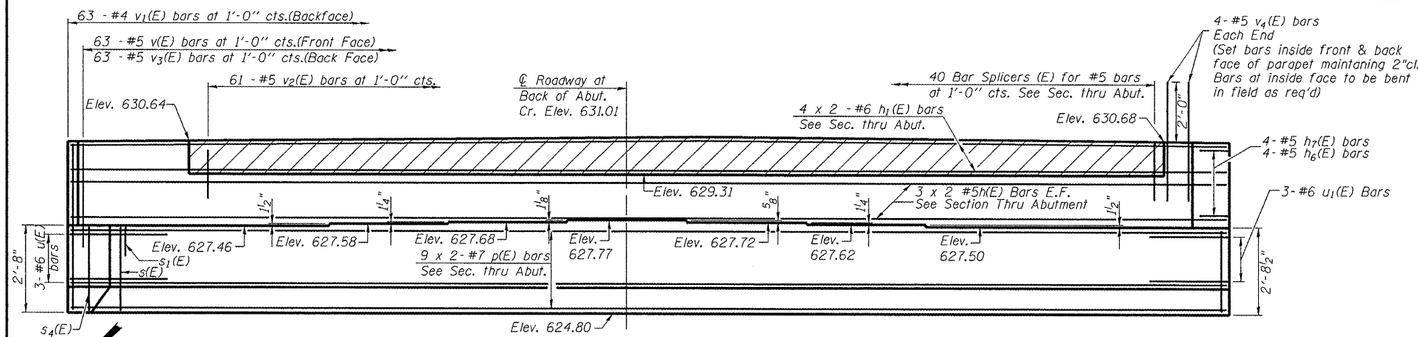


## ELEVATION

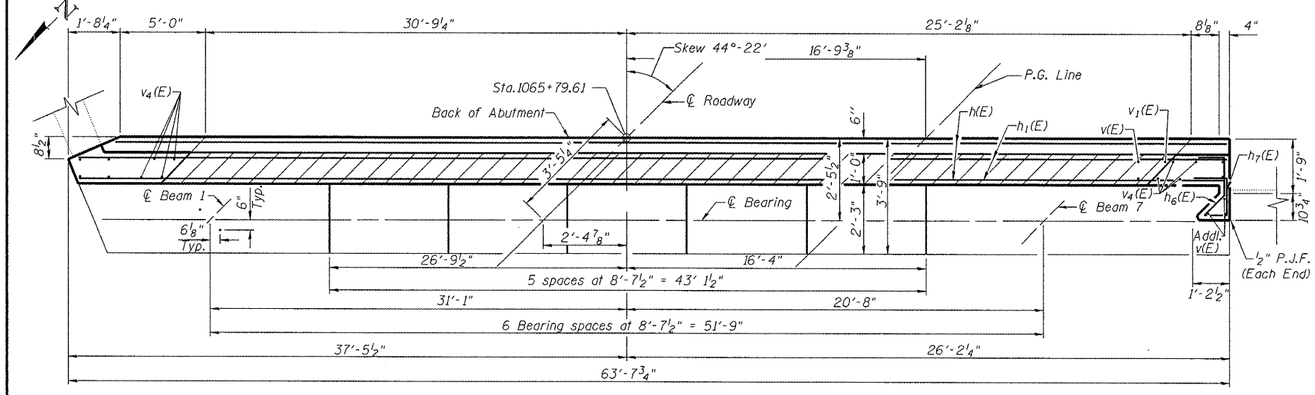


## TOP VIEW

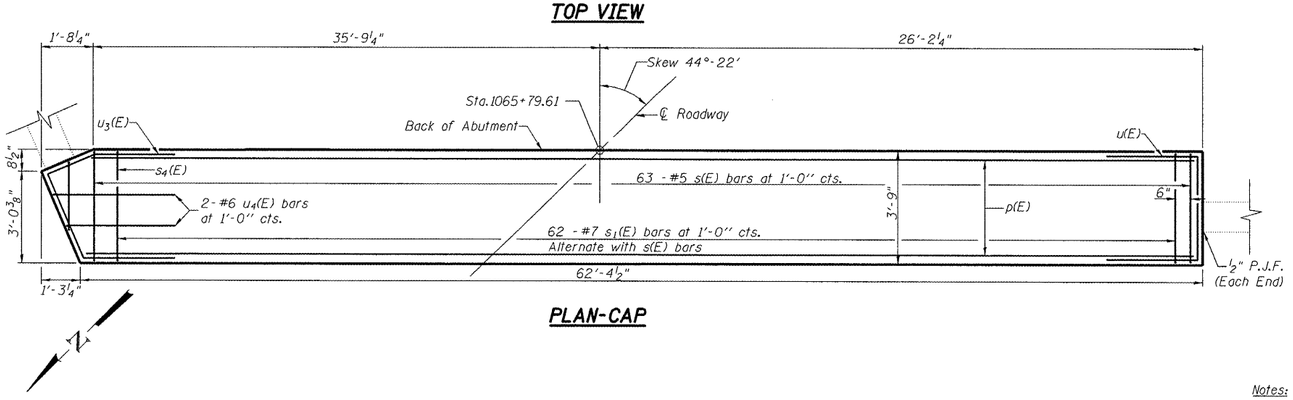


## PLAN-CAP

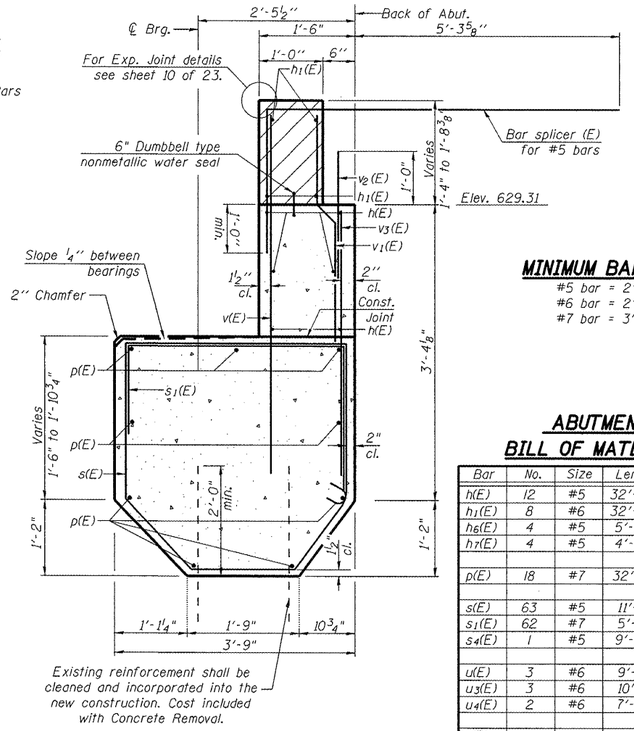


Existing reinforcement shall be cleaned and incorporated into the new construction. Cost included with Concrete Removal.

## SEC. THRU ABUT.

## MINIMUM BAR LAP

#5 bar = 2'-5"
#6 bar = 2'-10"
#7 bar = 3'-10"

## ABUTMENT BILL OF MATERIAL

| Bar | No. | Size | Length | Shape |
|---|---|---|---|---|
| h(E) | 12 | #5 | 32'-7" | |
| h1(E) | 8 | #6 | 32'-10" | |
| h6(E) | 4 | #5 | 5'-1" | |
| h7(E) | 4 | #5 | 4'-4" | |
| p(E) | 18 | #7 | 32'-11" | |
| s(E) | 63 | #5 | 11'-1" | |
| s1(E) | 62 | #7 | 5'-9" | |
| s4(E) | 1 | #5 | 9'-1" | |
| u(E) | 3 | #6 | 9'-0" | |
| u3(E) | 3 | #6 | 10'-4" | |
| u4(E) | 2 | #6 | 7'-11" | |
| v(E) | 66 | #5 | 5'-4" | |
| v1(E) | 63 | #4 | 3'-6" | |
| v2(E) | 61 | #5 | 2'-0" | |
| v3(E) | 63 | #5 | 3'-1" | |
| v4(E) | 8 | #5 | 4'-0" | |
| ▲ Structure Excavation | | | Cu. Yd. | 45 |
| ▲ Concrete Structures | | | Cu. Yd. | 35.0 |
| ▲ Reinforcement Bars, Epoxy Coated | | | Pound | 4530 |
| ▲ Bar Splicers | | | Each | 40 |
| ▲ Concrete Sealer | | | Sq. Ft. | 578 |

For details of Bar Splicers, see sheet 13 of 23.
Bars indicated thus 9x2-#7 etc. indicates 9 lines of bars with 2 lengths per line.
▲ For Information Only

FOR INFORMATION ONLY

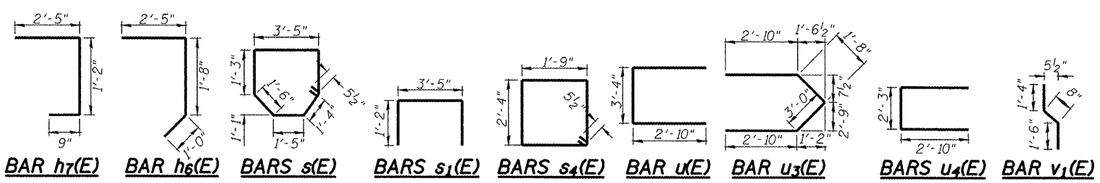


Notes:
Hatched area to be poured after superstructure false work has been removed. Quantity of concrete included with Concrete Superstructure.
Space reinforcement in cap to miss anchor bolts.
Pour steps monolithically with cap.
All exposed corners shall have a ¾" chamfer (typ.)
The bar splicer is to be placed parallel to the approach pavement reinforcement.

ILLINOIS DEPARTMENT OF TRANSPORTATION

**NORTHBOUND SOUTH ABUTMENT DETAILS**
**I 55 OVER MACOUPIN CREEK**
**F.A.I. ROUTE 55 - SEC. (68-4)F**
**MONTGOMERY COUNTY**
**STATION 1066+03.18**
**STRUCTURE NO. 068-0038 N.B.**
**STRUCTURE NO. 068-0039 S.B.**

DATE: 04-08 DRAWN BY: MLO
REVISED: CHECKED BY: PBB