F.A.P. RTE.	SECTION	COUNTY	TOTAL SHEETS	SHEET NO.
807	00-00374-01-PV	CHAMPAIGN	242	157
STA.		TO STA.		
		ILLINOIS	F.A. PROJ. NO. RS-HPP-1805(001)	

CONTRACT NO. 91368

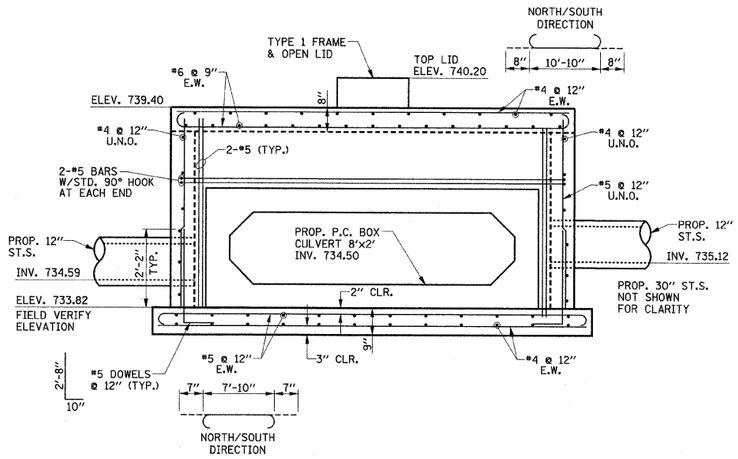

EAST WALL ELEVATION
(LOOKING WEST)

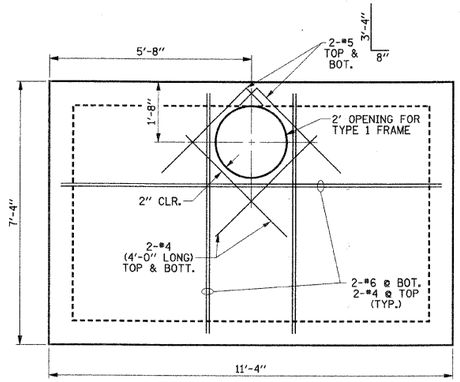

TOP PLAN

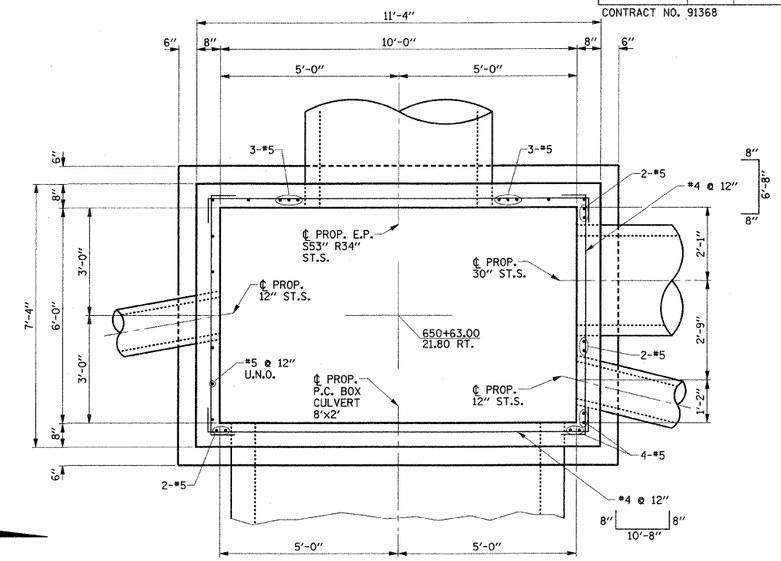

BOTTOM SLAB PLAN

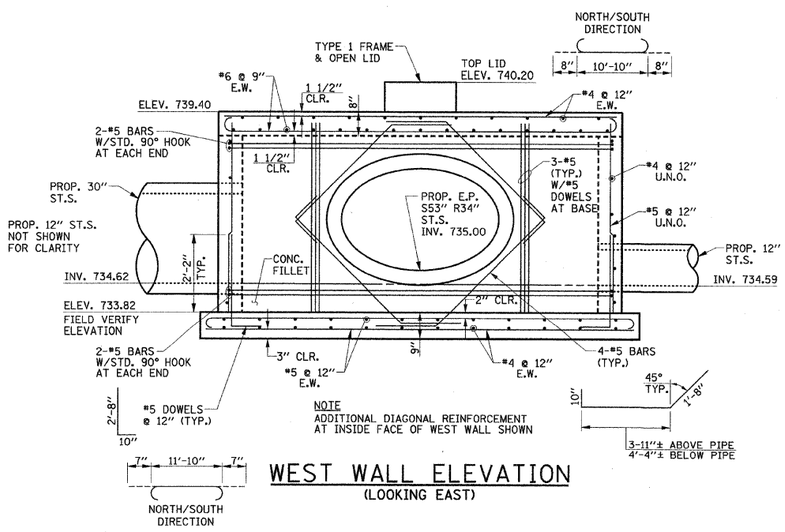

NOTE
ADDITIONAL DIAGONAL REINFORCEMENT AT INSIDE FACE OF WEST WALL SHOWN

WEST WALL ELEVATION
(LOOKING EAST)

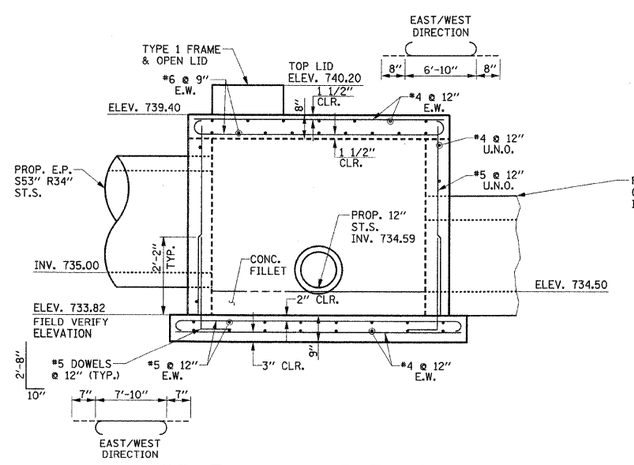

SOUTH WALL ELEVATION
(LOOKING NORTH)

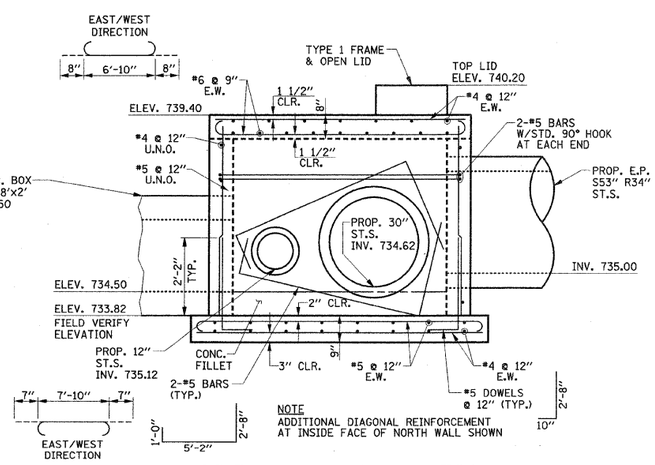

NOTE
ADDITIONAL DIAGONAL REINFORCEMENT AT INSIDE FACE OF NORTH WALL SHOWN

NORTH WALL ELEVATION
(LOOKING SOUTH)

BAR LAP TABLE

BAR SIZE	MIN. LAP
4	1'-8"
5	2'-2"

NOTE
THIS WORK WILL BE PAID FOR AT THE CONTRACT UNIT PRICE PER EACH FOR JUNCTION BOX NO. 1, WHICH PRICE SHALL INCLUDE ALL MATERIALS AND LABOR INCLUDING EXCAVATION, CONCRETE, REINFORCEMENT BARS, FRAME AND LID, AND BACKFILLING

Structural Engineer
Clark Dietz, Inc.

DATE: 10/2/08
License Expires 11-30-2010

STATE OF ILLINOIS SEAN M. MARZANO 081-006321 CHAMPAIGN, ILLINOIS LICENSED STRUCTURAL ENGINEER

ILLINOIS DEPARTMENT OF TRANSPORTATION

JUNCTION BOX NO. 1 DETAIL
STA. 650+63, RT.

SCALE : 1/2" = 1'-0"

DATE : 10-08
DRAWN BY : J.L.B.
CHECKED BY : S.M.M.

P:\C01401\Plans\sheets\structure-details.dgn
10/2/2008 8:39:27 AM