01-16-2026 LETTING ITEM 023

F.A.I. RTE	SECTION	COUNTY	TOTAL SHEETS	SHEET NO
290	2019-192-B-R	COOK	237	1
	ILLINOIS	CONTRACT NO. 62K65		

* 237 + 1 = 238 TOTAL SHEETS

STATE OF ILLINOIS
DEPARTMENT OF TRANSPORTATION

PROPOSED
HIGHWAY PLANS

FAI 290 (INTERSTATE 290)
AT SACRAMENTO BOULEVARD
SECTION: 2019-192-B-R
PROJECT: NHPP-EW4T(947)
BRIDGE SUPERSTRUCTURE REPLACEMENT
COOK COUNTY

IMPROVEMENTS LOCATED IN THE CITY OF CHICAGO

FOR INDEX OF SHEETS, SEE SHEET NO. 2

TRAFFIC DATA

	ADT-EXISTING	ADT-2040
SACRAMENTO BOULEVARD	22,200	23,000
WEST VAN BUREN STREET	13,400	14,000
WEST CONGRESS PARKWAY	10,600	11,000
I-290	198,600	214,343

	DESIGN SPEED	POSTED SPEED
SACRAMENTO BOULEVARD	30 MPH	30 MPH
WEST VAN BUREN STREET	30 MPH	30 MPH
WEST CONGRESS PARKWAY	30 MPH	30 MPH
I-290	55 MPH	55 MPH

HIGHWAY FUNCTIONAL CLASSIFICATION

SACRAMENTO BOULEVARD	MAJOR COLLECTOR
WEST VAN BUREN STREET	LOCAL ROAD
WEST CONGRESS PARKWAY	LOCAL ROAD
I-290	INTERSTATE

C-91-172-20

R13E

T39N

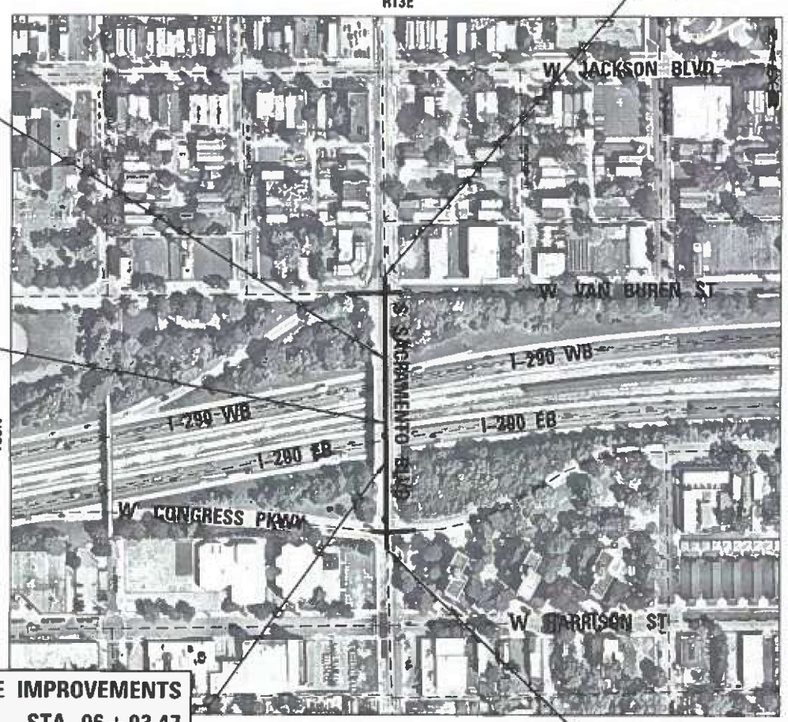

END ROADWAY IMPROVEMENTS
STA 11+51.10

END SUPERSTRUCTURE IMPROVEMENTS
STA 09+40.24

STRUCTURE NUMBER
016-0754

BEGIN SUPERSTRUCTURE IMPROVEMENTS
STA 06+93.47

BEGIN ROADWAY IMPROVEMENTS
STA 04+10.75

GROSS LENGTH = 740.35 FT. = 0.140 MILE
NET LENGTH = 740.35 FT. = 0.140 MILE

D-91-362-20



LOCATION OF SECTION INDICATED THUS: -

COLLINS ENGINEERS, INC.

HORNER SHIFRIN
WWW.HORNERSHIFRIN.COM

AMES Engineering, Inc.
TWO ENGINEERS
6330 Belmont Road, Suite 4B
Downers Grove, IL

STATE OF ILLINOIS
DEPARTMENT OF TRANSPORTATION

SUBMITTED September 22 20 25

REGIONAL ENGINEER

December 5 20 25

ENGINEER OF DESIGN AND ENVIRONMENT

December 5 20 25

DIRECTOR OF HIGHWAYS, PROJECT IMPLEMENTATION

100' 200' 300' — 1" = 100'
0 10' 20' 30' — 1" = 10'
0 50' 100' — 1" = 50'
0 50' 100' — 1" = 40'
0 50' 100' — 1" = 30'
0 50' 100' — 1" = 20'

FULL SIZE PLANS HAVE BEEN PREPARED USING STANDARD ENGINEERING SCALES. REDUCED SIZED PLANS WILL NOT CONFORM TO STANDARD SCALES. IN MAKING MEASUREMENTS ON REDUCED PLANS, THE ABOVE SCALES MAY BE USED.

C.U.A.N.
1-312-744-7000
OR 811

MEADE ELECTRIC CO. DISTRICT ONE ELECTRICAL MAINTENANCE CONTRACTOR LOCATES IDOT ELECTRICAL EQUIPMENT AND UNDERGROUND CABLES 773-287-7672

PROJECT MANAGER: PRAVEEN KAINI (847) 705-4237

CONTRACT NO. 62K65

PRINTED BY THE AUTHORITY OF THE STATE OF ILLINOIS

REV-SEP

INDEX OF SHEETS

SHEET NO.	DESCRIPTION
1	COVER SHEET
2	INDEX OF SHEETS
3	SEALS AND SIGNATURES
4	GENERAL NOTES
5-24	SUMMARY OF QUANTITIES
25-30	SCHEDULE OF QUANTITIES
31-34	TYPICAL SECTIONS
35-36	ALIGNMENT, TIES, AND BENCHMARKS
37-40	ROADWAY REMOVAL PLAN
41-44	PLAN AND PROFILE
45	GRADING PLAN
46-49	ADA DETAILS - CONGRESS PARKWAY
50-53	ADA DETAILS - VAN BUREN STREET
54-70	MAINTENANCE OF TRAFFIC
71-83	DRAINAGE AND UTILITY PLAN
84-87	EROSION CONTROL PLAN
88-89	LANDSCAPING PLAN
90-91	SIGNING SCHEDULE
92-97	PAVEMENT MARKING AND SIGNING PLAN
98-120	TRAFFIC CONTROL SIGNAL PLAN
121-128	LIGHTING PLAN
129-141	EXISTING ITS PLAN (FOR INFORMATION ONLY)
142-178	STRUCTURE PLAN
179-181	BRIDGE MOUNTED SIGN DETAIL
182-185	CROSS SECTIONS - SACRAMENTO
186-192	CROSS SECTIONS - I-290 EB
193-197	CROSS SECTIONS - I-290 WB
198-229	DISTRICT 1 DETAILS
230-237	CDOT DETAILS

HIGHWAY STANDARDS (IDOT)

000001-09	STANDARD SYMBOLS, ABBREVIATIONS AND PATTERNS
001001-02	AREAS OF REINFORCEMENT BARS
001006	DECIMAL OF AN INCH AND OF A FOOT
280001-07	TEMPORARY EROSION CONTROL SYSTEMS
420401-13	PAVEMENT CONNECTOR (PCC) FOR BRIDGE APPROACH SLAB
420701-03	PAVEMENT WELDED WIRE REINFORCEMENT
442201-04	CLASS C AND D PATCHES
515001-04	NAME PLATE FOR BRIDGES
601001-05	PIPE UNDERDRAINS
602001-02	CATCH BASIN, TYPE A
602011-02	CATCH BASIN, TYPE C
602601-06	PRECAST REINFORCED CONCRETE FLAT SLAB TOP
602701-02	MANHOLE STEPS
604091-05	FRAME AND GRATE, TYPE 24
606001-09	CONCRETE CURB TYPE B AND COMBINATION CURB AND GUTTER
630001-13	STEEL PLATE BEAM GUARDRAIL
630301-09	SHOULDER WIDENING FOR TYPE 1 (SPECIAL) GUARDRAIL TERMINALS
631031-18	TRAFFIC BARRIER TERMINAL, TYPE 6
635001-02	DELINEATORS
637006-05	CONCRETE BARRIER DOUBLE FACE, 44 IN HEIGHT
642001-03	SHOULDER RUMBLE STRIPS, 16 IN.
664001-02	CHAIN LINK FENCE
701001-02	OFF-ROAD OPERATIONS, 2L, 2W, MORE THAN 15' (4.5 M) AWAY
701011-04	OFF-ROAD OPERATIONS, 2L, 2W, DAY ONLY
701006-05	OFF-ROAD OPERATIONS, 2L, 2W, 15' (4.5 M) TO 24" (600 MM) FROM PAVEMENT EDGE
701101-05	OFF-ROAD OPERATIONS, MULTILANE, 15' TO 24" FROM PAVEMENT EDGE
701106-02	OFF-ROAD OPERATIONS, MULTILANE, MORE THAN 15' AWAY
701301-04	LANE CLOSURE, 2L, 2W, SHORT TIME OPERATIONS
701311-03	LANE CLOSURE, 2L, 2W, MOVING OPERATIONS – DAY ONLY
701400-12	APPROACH TO LANE CLOSURE, FREEWAY/EXPRESSWAY
701401-13	LANE CLOSURE, FREEWAY/EXPRESSWAY
701406-13	LANE CLOSURE, FREEWAY/EXPRESSWAY, DAY OPERATIONS ONLY
701411-09	LANE CLOSURE, MULTILANE, AT AT ENTRANCE OR EXIT RAMP, FOR SPEEDS ≥ 45 MPH
701427-05	LANE CLOSURE, MULTILANE, INTERMITTENT OR MOVING OPERATION, FOR SPEEDS ≤ 40 MPH
701428-01	TRAFFIC CONTROL, SETUP AND REMOVAL, FREEWAY/EXPRESSWAY
701446-11	TWO LANE CLOSURE, FREEWAY/EXPRESSWAY
701601-09	URBAN LANE CLOSURE, MULTILANE, 1W OR 2W WITH NONTRAVERSABLE MEDIAN
701602-10	URBAN LANE CLOSURE, MULTILANE, 2W WITH BIDIRECTIONAL LEFT TURN LANE
701606-10	URBAN SINGLE LANE CLOSURE, MULTILANE, 2W WITH MOUNTABLE MEDIAN
701611-01	URBAN HALF ROAD CLOSURE, MULTILANE, 2W WITH MOUNTABLE MEDIAN
701701-10	URBAN LANE CLOSURE, MULTILANE INTERSECTION
701801-06	SIDEWALK, CORNER OR CROSSWALK CLOSURE
701901-11	TRAFFIC CONTROL DEVICES
704001-08	TEMPORARY CONCRETE BARRIER
720001-01	SIGN PANEL MOUNTING DETAILS
720006-04	SIGN PANEL ERECTION DETAILS
720021-03	SIGN PANELS EXTRUDED ALUMINUM TYPE
725001-01	OBJECT AND TERMINAL MARKERS
728001-01	TELESCOPING STEEL SIGN SUPPORT
731001-01	BASE FOR TELESCOPING STEEL SIGN SUPPORT
780001-05	TYPICAL PAVEMENT MARKINGS
781001-04	TYPICAL APPLICATIONS RAISED REFLECTIVE PAVEMENT MARKERS
782006-01	GUARDRAIL AND BARRIER WALL REFLECTOR MOUNTING DETAILS

DISTRICT 1 DETAILS

BD-07	STORM SEWER CONNECTION TO EXISTING SEWER
BD-08	FRAMES AND LIDS ADJUSTMENT WITH MILLING
BD-09	CITY OF CHICAGO DRAINAGE DETAILS
BD-17	CITY OF CHICAGO PCC CONC DRIVEWAY, ALLEY RETURN AND SIDEWALK
BD-32	BUTT JOINTS AND HMA TAPER
BD-33	HMA TAPER AT EDGE OF PCC PAVEMENT
BD-34	DEPRESSED CURB & GUTTER AND SHOULDER TREATMENT AT TBT TY 1 SPL
BD-47	CITY OF CHICAGO CATCH BASIN, INLET AND MANHOLE DETAILS
BD-51	BENCHING DETAIL FOR EMBANKMENT WIDENING
BD-58	CITY OF CHICAGO DETECTABLE WARNINGS
BM-20	PRUNING FOR SAFETY AND EQUIPMENT CLEARANCE
BE-702	MISC. ELECTRICAL DETAILS A
BE-901	SUSPENDED MOUNT LED UNDERPASS LUMINAIRE INSTALLED DETAILS
TC-08	ENTRANCE AND EXIT RAMP CLOSURE DETAILS
TC-09	FREEWAY SINGLE AND MULTI LANE WEAVE
TC-10	TRAFFIC CONTROL AND PROTECTION FOR SIDE ROADS, INTERSECTIONS AND DRIVEWAYS
TC-11	RAISED REFLECTIVE PAVEMENT MARKERS (SNOW PLOW RESISTANT)
TC-12	MULTI-LANE FREEWAY PAVEMENT MARKING (2 SHEETS)
TC-16	SHORT-TERM PAVEMENT MARKING LETTERS AND SYMBOLS
TC-17	TRAFFIC CONTROL FOR FREEWAY SHOULDER CLOSURES AND PARTIAL RAMP CLOSURES
TC-18	FREEWAY/EXPRESSWAY SIGNING FOR FLAGGING OPERATIONS AT WORK ZONE OPENINGS
TC-21	DETOUR SIGNING FOR CLOSING STATE HIGHWAYS
TC-22	ARTERIAL ROAD INFORMATION SIGN
TC-24	CITY OF CHICAGO TYPICAL PAVEMENT MARKINGS (3 SHEETS)
TC-26	DRIVEWAY ENTRANCE SIGNING
TS-02	MAST ARM MOUNTED STREET NAME SIGNS

STANDARD DETAILS (CDOT)

A-1-3	INTERSECTION CROSSWALK LAYOUT
A-2-6	CONCRETE CURB & GUTTER DETAIL
A-3-1	PORTLAND CEMENT CONCRETE SIDEWALK CONSTRUCTION
A-7-1A	CROSSWALK MARKING DETAIL
A-7-2	6' BIKE SYMBOL
B-1-1	TYPICAL CORNER RAMP LAYOUTS
B-1-2	2 PERPENDICULAR RAMPS AT CORNER
B-1-3	2 PERPENDICULAR RAMPS AT CORNER WITH RAMPS IN CURB RADIUS
B-1-4	PERPENDICULAR RAMP AT CORNER IN CURB RADIOUS WITH SINGLE CROSSING
B-2-2A	DRIVEWAY CONSTRUCTION PLAN VIEWS
B-2-2B	DRIVEWAY CONSTRUCTION SECTIONS
B-3-1	CONVERSION CHARTS
B-3-2	GENERAL NOTES
B-3-3	GENERAL NOTES (CONTINUED)
B-3-4	ADA COMPLIANCE AND TRANSITION GUIDELINES
B-4-3	CURB & GUTTER DETAILS
526	ALUMINUM PEDESTAL BASE WITH HANDHOLE
579	STANDARD METHOD FOR BACKFILLING CABLE AND CONDUIT TRENCHES IN SODDED PARKWAY AND LAWNS
659	2 BOLT MAST ARM ATTACHMENT POLE PLATE DETAILS
729	3' X 4' X 4' CONCRETE MANHOLE WITH 30" FRAME AND COVER
730	3' X 4' X 4' CONCRETE MANHOLE WITH 24" FRAME AND COVER
732	4' X 6' X 6' CONCRETE MANHOLE WITH 24" FRAME AND COVER
733	4' X 6' X 6' CONCRETE MANHOLE WITH 30" FRAME AND COVER
736	TYPICAL GROUNDING METHODS FOR BUREAU OF ELECTRICITY EQUIPMENT
740	TRAFFIC SIGNAL UPPER AND LOWER BRACKET ARM ASSEMBLY
741	TRAFFIC SIGNAL BRACKET ARM ASSEMBLY
762	3.95" X 8.5" STEEL / 32'-6" POLE 7 GAUGE
806	$1\frac{1}{2}$" X 60" STEEL ANCHOR ROD
808	5.17" X 10.0" STEEL/34'-6" POLE 7 OR 3 GAUGE
811	1-1/4" X 60" STEEL ANCHOR ROD
813	INSTALLATION METHOD OF INSTALLING CONDUIT UNDER PAVED ROADWAY
816	FOUNDATION FOR 34'-6" TRAFFIC SIGNAL POLE WITH $17\frac{1}{4}$" BOLT CIRCLE
818	FOUNDATION FOR 34' - 6" ARTERIAL STREET LIGHT OR TRAFFIC SIGNAL
827	7.67" X 12.5" STEEL/34-6-" POLE 3 GAUGE
834	TYPICAL TRAFFIC SIGNAL MOUNTING DETAILS
835	TYPICAL TRAFFIC SIGNAL MOUNTING DETAILS
839	12' MAST ARM FOR 2-BOLT ATTACHMENT
867	30" DIA. CONCRETE HANDHOLE
870	STEEL TRAFFIC SIGNAL MAST ARM-MONOTUBE
871	36" DIA. HEAVY DUTY CONCRETE HANDHOLE WITH 30" FRAME AND COVER FOR STREET INSTALLATION
872	24" DIA. CIRCULAR MANHOLE FRAME AND COVER WITH 41-3/4" O.D. FRAME
874	30" CIRCULAR STREET MANHOLE FRAME
888	TYPE "P" FOUNDATION FOR BASE MOUNTED TRAFFIC SIGNAL CONTROL CABINET
954	JUNCTION BOX FOR TRAFFIC SIGNAL & FIRE ALARM
7878	PULLING IRON
10927	30" CIRCULAR STREET MANHOLE COVER
11420-A	CAST POLETOP FOR STEEL POLE.
11925	INSTALLATION OF SERVICE EQUIPMENT ON C.E. CO. WOOD POLES
11984	BANDING FITTINGS FOR POLE MOUNTING TRAFFIC SIGNAL
12268A	TRAFFIC CONTROL SIGNALS STRIP WIRING LAYOUT

MODEL: Default
FILE NAME: pw:\\PW01.hornershifrin.com:HS IDOT Documents\230560000-PTB195-007 D1 Pz,4 Sec Phil Sus Collins\CAD Sheets\D162K65_SscramentoD162K65_sht-index.dgn

HORNER SHIFRIN
WWW. HORNERSHIFRIN .COM

USER NAME = rocampo	DESIGNED -	REVISED -
	DRAWN -	REVISED -
PLOT SCALE = 10.0000 ' / in.	CHECKED -	REVISED -
PLOT DATE = 10/14/2025	DATE -	REVISED -

STATE OF ILLINOIS
DEPARTMENT OF TRANSPORTATION

INDEX OF SHEETS, HIGHWAY STANDARDS, DETAILS, GENERAL NOTES, AND COMMITMENTS

SCALE: NTS | SHEET 1 OF 2 SHEETS | STA. | TO STA.

F.A.I. RTE.	SECTION	COUNTY	TOTAL SHEETS	SHEET NO.
290	2019-192-B-R	COOK	237	2
		CONTRACT NO. 62K65		
		ILLINOIS	FED. AID PROJECT	

PROFESSIONAL ENGINEER'S SIGN & SEAL

FOR SHEETS: 1-29, 31-53, 90-94, 182-197

LICENSED PROFESSIONAL ENGINEER
RACIEL OCAMPO
062-070793
OF ILLINOIS

RACIEL OCAMPO, P.E.
EXPIRES 11-30-2025

PROFESSIONAL ENGINEER'S SIGN & SEAL

FOR SHEETS: 98-119

TOBY C. MICKEY
062-053237
LICENSED
PROFESSIONAL
ENGINEER
STATE OF ILLINOIS

TOBY C. MICKEY, P.E.
EXPIRES 11-30-2025

PROFESSIONAL ENGINEER'S SIGN & SEAL

FOR SHEETS: 30, 54-89, 95-97

RYAN GALL
062-064397
LICENSED
PROFESSIONAL
ENGINEER
OF
ILLINOIS

RYAN GALL, P.E.
EXPIRES 11-30-2025

PROFESSIONAL ENGINEER'S SIGN & SEAL

FOR SHEETS: 121-128

BRENDA D. LOWERY
062-065244
LICENSED
PROFESSIONAL
ENGINEER
STATE OF ILLINOIS

BRENDA D LOWERY, P.E.
EXPIRES 11-30-2025

STRUCTURAL ENGINEER'S SIGN & SEAL

FOR SHEETS: 142-152, 157-181

STATE OF ILLINOIS
EWA K.
MROCZEK
081-006067
CHICAGO, IL
LICENSED STRUCTURAL ENGINEER

EWA MROCZEK, S.E.
EXPIRES 11-30-2026

STRUCTURAL ENGINEER'S SIGN & SEAL

FOR SHEETS: 153-156

LICENSED STRUCTURAL ENGINEER
JUNSHAN LIU
081-008224
STATE OF ILLINOIS

JUNSHAN LIU, S.E.
EXPIRES 11-30-2026

MODEL: Default
FILE NAME: pw:\\PW01.hornershifrin.com:HS IDOT\Documents\230560000-PTB195-007_D1_Paul-Sac_Phil_SubCollins\CAD Sheets\D162K65_Sacramento\D162K65-sht-peseals.dgn

HORNER SHIFRIN
WWW.HORNERSHIFRIN.COM

USER NAME = krkubalanza	DESIGNED -	REVISED -	
	DRAWN -	REVISED -	
PLOT SCALE = 10.0000 ' / in.	CHECKED -	REVISED -	
PLOT DATE = 10/7/2025	DATE -	REVISED -	

STATE OF ILLINOIS
DEPARTMENT OF TRANSPORTATION

FAI-290 (EISENHOWER EXPRESSWAY) AT SACRAMENTO BOULEVARD
SEALS & SIGNATURES

SCALE: NTS | SHEET OF SHEETS | STA. TO STA.

F.A.I. RTE.	SECTION	COUNTY	TOTAL SHEETS	SHEET NO.
290	2019-192-B-R	COOK	237	3
		CONTRACT NO. 62K65		
		ILLINOIS	FED. AID PROJECT	

GENERAL NOTES (DISTRICT 1)

1. THE CONTRACTOR WILL NOT BE ALLOWED TO SET UP A YARD OR FIELD OFFICE ON STATE PROPERTY WITHOUT WRITTEN PERMISSION FROM THE DEPARTMENT.

2. ALL MILLED SURFACES SHALL BE A UNIFORM CROSS SLOPE PER LANE AND FREE OF RIDGES BETWEEN PASSES. ANY DEVIATIONS SHALL BE CORRECTED AT NO COST TO THE DEPARTMENT.

3. ALL PAVEMENT PATCHING LOCATIONS WILL BE DETERMINED IN THE FIELD BY THE ENGINEER.

4. LOCATION OF COMBINATION CONCRETE CURB AND GUTTER REMOVAL AND REPLACEMENT [OR COMBINATION CURB AND GUTTER (THE TYPE SPECIFIED ON THE PLANS)], WILL BE DETERMINED IN THE FIELD BY THE ENGINEER.

5. TEN (10) FOOT TRANSITIONS SHALL BE USED TO MATCH PROPOSED CURB AND GUTTER AND MEDIAN ITEMS OF WORK TO EXISTING CURBS AND GUTTER AND MEDIANS IN THE FIELD, UNLESS OTHERWISE SHOWN.

6. DRAINAGE ADJUSTMENT OR RECONSTRUCTION LOCATIONS WILL BE DETERMINED IN THE FIELD BY THE ENGINEER.

7. IT SHALL BE THE CONTRACTOR'S RESPONSIBILITY TO VERIFY ALL DIMENSIONS AND CONDITIONS EXISTING IN THE FIELD PRIOR TO CONSTRUCTION AND ORDERING OF MATERIALS.

8. STORM SEWER CONSTRUCTED UNDER THE ROADWAY SHALL BE BACKFILLED ACCORDING TO METHOD 1 OF ARTICLE 550.07 OF THE STANDARD SPECIFICATIONS.

9. THE CONTRACTOR SHALL BE REQUIRED TO KEEP A RECORD OF THE LOCATIONS OF PLATED STRUCTURES BY STATION AND OFFSET LEFT OR RIGHT OF THE CENTERLINE OF PAVEMENT.

10. THE CONTRACTOR SHALL BE REQUIRED TO KEEP A RECORD OF THE LOCATIONS OF THE BURIED STRUCTURES ACCORDING TO THE STATION AND DISTANCE LEFT OR RIGHT OF THE CENTERLINE OF PAVEMENT. UPON COMPLETION OF THE WORK, THE CONTRACTOR SHALL DELIVER THE RECORD TO THE ENGINEER.

11. EXISTING BROKEN FRAMES AND LIDS SHALL BE REMOVED AND DISPOSED OF BY THE CONTRACTOR AND SHALL BE REPLACED AS DIRECTED BY THE ENGINEER. REPLACEMENT FRAMES AND LIDS WILL BE PAID FOR ACCORDING TO ARTICLE 109.04 OF THE STANDARD SPECIFICATIONS UNLESS A SEPARATE PAY ITEM HAS BEEN PROVIDED.

12. FOR WORK OUTSIDE THE LIMITS OF BRIDGE APPROACH PAVEMENT, ALL REFERENCES IN THE HIGHWAY STANDARDS AND STANDARD SPECIFICATIONS FOR REINFORCEMENT, DOWEL BARS AND TIE BARS IN PAVEMENT, SHOULDERS, CURB, GUTTER, COMBINATION CURB AND GUTTER AND MEDIAN, AND CHAIR SUPPORTS FOR CRC PAVEMENT, SHALL BE EPOXY COATED, UNLESS NOTED ON THE PLAN.

13. THE CONTRACTOR SHALL CONTACT THE DISTRICT ONE TRAFFIC CONTROL SUPERVISOR, KALPANA KANNAN-HOSADURGA, AT KALPANA.KANNAN-HOSADURGA@ILLINOIS.GOV AND THE EXPRESSWAYS TRAFFIC CONTROL SUPERVISOR, CARLOS MUNOZ-ALBA, AT CARLOS.MUNOZ@ILLINOIS.GOV A MINIMUM OF 72 HOURS IN ADVANCE OF BEGINNING WORK.

14. THE ENGINEER SHALL CONTACT ABDULLA ALI, AREA TRAFFIC FIELD ENGINEER, AT ABDULLA.ALI@ILLINOIS.GOV A MINIMUM OF TWO (2) WEEKS PRIOR TO THE PLACEMENT OF PERMANENT PAVEMENT MARKINGS.

15. THE CONTRACTOR SHALL BE RESPONSIBLE FOR THE NOTIFICATION OF ALL EMERGENCY SERVICES, SCHOOL DISTRICTS, I.D.O.T.'S COMMUNICATIONS CENTER, SPRINGFIELD TRUCK PERMIT SECTION AND OTHER AGENCIES AFFECTED BY THE CLOSURE. THE CONTRACTOR SHALL ALSO BE RESPONSIBLE FOR POSTING SIGNS THAT WILL INDICATE THE DATES THE CLOSURE WILL BE IN PLACE.

16. PAVEMENT MARKING TAPE, TYPE IV SHALL BE USED FOR SHORT TERM PAVEMENT MARKINGS ON ALL FINAL SURFACES.

17. THE "ARTERIAL ROAD INFORMATION SIGN (TC-22)" IS APPLICABLE ONLY TO ARTERIAL ROADS AND SHALL NOT BE APPLIED TO EXPRESSWAYS/TOLLWAYS.

18. OVERNIGHT LANE CLOSURES SHALL NOT BE ALLOWED FOR REHABILITATION PROJECTS INVOLVING DAYTIME MILLING AND RESURFACING OPERATIONS AND CLASS D PATCHING UNLESS OTHER CONDITIONS WARRANT EXTENDED LANE CLOSURES AS DETERMINED AND APPROVED IN WRITING BY THE ENGINEER OR AS PROVIDED FOR IN THE CONTRACT SPECIFICATIONS.

19. MATERIALS RESULTING FROM THE ROUTING OF CRACKS IN THE EXISTING PAVEMENT MAY BE PLACED, SHAPED AND COMPACTED TO THE SATISFACTION OF THE ENGINEER ALONG EXISTING AGGREGATE SHOULDERS ADJACENT TO THE PAVEMENT. ALL MATERIALS RESULTING FROM THE ROUTING OF CRACKS IN PAVEMENTS WITHOUT AGGREGATE SHOULDERS AND SURPLUS MATERIALS RESULTING FROM THE ROUTING OF CRACKS IN PAVEMENTS WITH AGGREGATE SHOULDERS, WHERE ALL MATERIALS ARE NOT PLACED ALONG EXISTING AGGREGATE SHOULDERS, SHALL BE DISPOSED OF AS SPECIFIED IN ARTICLE 202.03 OF THE STANDARD SPECIFICATIONS. OLD SEALANTS REMOVED PRIOR TO ROUTING SHALL BE DISPOSED OF AS SPECIFIED IN ARTICLE 202.03. THIS WORK WILL NOT BE PAID FOR SEPARATELY, BUT THE COST SHALL BE CONSIDERED AS INCLUDED IN THE CONTRACT UNIT PRICE FOR THE CONSTRUCTION ITEMS INVOLVED, AND NO ADDITIONAL COMPENSATION WILL BE ALLOWED.

20. THE AGGREGATE GRADATION FOR THE LOWER 9 INCHES OF AGGREGATE SUBGRADE IMPROVEMENT 12" SHALL BE CS 1 OR RR 1.

21. THE SUBGRADE STABILITY SHALL BE VERIFIED BY PROOF ROLLING WITH A FULL LOADED TANDEM-AXLE TRUCK.

22. IDOT FACILITIES ARE NOT LOCATED BY JULIE. IDOT ELECTRICAL FACILITIES INCLUDING ROADWAY LIGHTING, FIBER OPTIC, ITS EQUIPMENT, TRAFFIC SIGNAL AND PUMP STATION FACILITIES ARE LOCATED BY THE DEPARTMENT'S ELECTRICAL MAINTENANCE CONTRACTOR. AS OF THE LETTING DATE, CONTACT THE MEADE ELECTRIC COMPANY AT 773-287-7672.

23. GEOTECHNICAL FABRIC FOR GROUND STABILIZATION AND / OR AGGREGATE SUBGRADE IMPROVEMENT (CU YD) HAVE BEEN PROVIDED FOR USE AT THE LOCATIONS INDICATED FOR SOILS THAT TEND TO BE UNSTABLE AND / OR UNSUITABLE. THE ACTUAL NEED FOR REMOVAL AND REPLACEMENT WITH ABOVE ITEM WILL BE DETERMINED IN THE FIELD AT THE TIME OF CONSTRUCTION BY THE GEOTECHNICAL ENGINEER. ALL POTENTIALLY UNSUITABLE SOILS SHOULD BE TESTED WITH A STATIC OR DYNAMIC CONE PENETROMETER AND TREATED IN ACCORDANCE WITH ARTICLE 301.04 OF THE SSRBC AND IDOT SUBGRADE STABILITY MANUAL. IF UNSTABLE AND / OR UNSUITABLE SOILS ARE NOT ENCOUNTERED, THEN THE QUANTITY SHALL BE DEDUCTED AND NO ADDITIONAL COMPENSATION WILL BE DUE TO THE CONTRACTOR.

24. THE CONTRACTOR SHALL REQUEST AND GAIN APPROVAL FROM THE ILLINOIS DEPARTMENT OF TRANSPORTATION'S EXPRESSWAY TRAFFIC OPERATIONS ENGINEER AT www.idottcs.com TWENTY-FOUR (24) HOURS IN ADVANCE OF ALL DAILY LANE, RAMP, AND SHOULDER CLOSURES AND 7 DAYS IN ADVANCE OF ALL PERMANENT AND WEEKEND CLOSURES ON ALL FREEWAYS AND/OR EXPRESSWAYS IN DISTRICT ONE. THIS ADVANCE NOTIFICATION IS CALCULATED BASED ON THE WORKWEEK OF MONDAY THROUGH FRIDAY AND SHALL NOT INCLUDE WEEKENDS OR HOLIDAYS.

25. THE DEPARTMENT HAS NOT OBTAINED ANY PERMITS FOR OFFSITE BORROW, WASTE, USE (BWU) AREAS. PRIOR TO WORKING IN BWU AREAS, IF THE CONTRACTOR CHOOSES TO USE ACTIVITIES REQUIRING PERMITS IT IS THE CONTRACTOR'S RESPONSIBILITY TO SECURE THE PROPER PERMITS. IN ADDITION TO THE BORROW REVIEW (BDE 2289) AND USE/WASTE REVIEW (BDE 2290) SUBMITTALS, THE CONTRACTOR SHALL SUBMIT AN EROSION AND SEDIMENT CONTROL (ESC) PLAN FOR EVERY BWU SITE TO THE DEPARTMENT FOR ACCEPTANCE. THE COST OF ALL MATERIALS AND LABOR NECESSARY TO COMPLY WITH THE ABOVE PROVISIONS TO PREPARE AND IMPLEMENT ESC PLANS WILL NOT BE PAID FOR SEPARATELY, BUT SHALL BE CONSIDERED AS INCLUDED IN THE UNIT BID PRICES OF THE CONTRACT AND NO ADDITIONAL COMPENSATION WILL BE ALLOWED.

26. ANY AGGREGATE SUBGRADE CONTAMINATED AND/OR DAMAGED BY THE CONTRACTOR'S VEHICLES AND/OR EQUIPMENT IS TO BE REMOVED AND REPLACED AS DIRECTED BY THE ENGINEER AT THE CONTRACTOR'S EXPENSE.

GENERAL NOTES (CDOT)

1. THE CONTRACTOR SHALL COORDINATE CONSTRUCTION ACTIVITIES WITH UTILITY COMPANIES AND THE CITY OF CHICAGO AND OBTAIN ALL NECESSARY PERMITS.

2. THE CITY OF CHICAGO IS TO MAKE ADJUSTMENTS TO THEIR STREET LIGHTING AND/OR TRAFFIC SIGNAL FACILITIES. THE CONTRACTOR SHALL COORDINATE HIS WORK AND COOPERATE WITH THE CITY OF CHICAGO IN THESE ADJUSTMENTS. THIS COORDINATION AND COOPERATION BY THE CONTRACTOR WILL NOT BE PAID FOR SEPARATELY BUT SHALL BE CONSIDERED INCLUDED IN THE COSTS OF THE CONTRACT.

3. ALL CATCH BASINS IN THE CITY OF CHICAGO SHALL MEET THE DEPARTMENT OF SEWERS' STANDARDS.

4. THE LICENSED SEWER CONTRACTOR MUST SUBMIT TWO (2) SETS OF PLANS APPROVED BY THE DEPARTMENT OF SEWERS FOR THE ISSUE OF THE SEWER PERMIT IN SUITE 410 - 333 SOUTH STATE STREET, CHICAGO, IL 60604. INSPECTION WILL BE PROVIDED BY THE DEPARTMENT OF SEWERS.

5. IF THE SEWER PIPE COVER IS REDUCED TO LESS THAN THREE (3) FEET, CONCRETE ENCASEMENT OF THE SEWER OR REPLACEMENT OF THESE SEWERS WITH CLASS 52 DUCTILE IRON PIPE WILL BE REQUIRED.

6. PERFORATED LIDS SHALL BE PLACED ON ALL MANHOLES AND CATCH BASINS.

7. BENCH MONUMENT LOCATIONS WITHIN THE LIMITS OF THE IMPROVEMENT CAN BE OBTAINED IN SUITE 410 - 333 SOUTH STATE STREET, CHICAGO, IL 60604.

8. ALL BROKEN, CRACKED, WORN OR OTHERWISE DAMAGED OR BICYCLE UNSAFE FRAMES AND LIDS ON SEWER STRUCTURES, SHALL BE REPLACED WITH NEW DEPARTMENT OF SEWERS' STANDARD FRAMES AND LIDS.

9. OPEN LID DRAINAGE STRUCTURES SHALL NOT BE CLOSED, COVERED OR OTHERWISE OBSTRUCTED DURING CONSTRUCTION OF THIS ROADWAY WITHOUT THE WRITTEN PERMISSION FROM THE CITY OF CHICAGO.

10. CITY OF CHICAGO CASTINGS ARE THE PROPERTY OF THE CITY OF CHICAGO AND THE CONTRACTOR SHALL NOTIFY THE CITY FOR REMOVAL AND DISPOSITION OF THE CASTINGS.

11. THE CONTRACTOR SHALL COORDINATE WITH THE OFFICE OF UNDERGROUND COORDINATION (OUC) TO OBTAIN PERMITS / APPROVAL FROM THE CHICAGO DEPARTMENT OF TRANSPORTATION, DIVISION OF INFRASTRUCTURE MANAGEMENT PRIOR TO ANY EXCAVATION OR DEMOLITION ACTIVITIES WITHIN THE PUBLIC RIGHT-OF-WAY. COORDINATION AND PERMITTING WITH THE OUC SHALL NOT BE PAID FOR SEPARATELY, BUT WILL BE CONSIDERED IN THE CONTRACT.

12. IN CASE OF DAMAGE TO CITY OF CHICAGO SEWERS, PRIVATE AND PUBLIC DRAINS, SEWER STRUCTURES AND/OR BENCH MONUMENTS, THE CONTRACTOR SHALL IMMEDIATELY CONTACT THE DEPARTMENT OF SEWERS AT (312) 747-7892 OR (312) 747-7893.

13. THE CONTRACTOR SHALL CONTACT THE CHICAGO TRANSIT AUTHORITY AT TRAFFIC.PLANNING@TRANSITCHICAGO.COM OR BY PHONE AT (312) 681-4151 SIX (6) WEEKS PRIOR TO CONSTRUCTION, TO REPORT TRAFFIC IMPACTS.

14. THE CHICAGO DEPARTMENT OF WATER MANAGEMENT (CDWM) FACILITIES TO BE ADJUSTED SHALL BE PERFORMED BY THE CONTRACTOR, THE FINAL PAYMENT TO THE CONTRACTOR SHALL BE WITHHELD UNTIL THE CDWM HAS INSPECTED AND FOUND THE ADJUSTED FACILITIES ACCEPTABLE. PLEASE CONTACT MR. ALBERT WTORKOWSKI OF THE CDWM AT ALBERT.WTORKOWSKI@CITYOFCHICAGO.ORG OR BY PHONE AT (312) 744-5070 IN ORDER TO SCHEDULE THE FINAL INSPECTION OF ANY ADJUSTED WATER FACILITIES.

15. CAUTION IS TO BE TAKEN TO ENSURE THAT NO FACILITIES OWNED AND MAINTAINED BY CDWM ARE DAMAGED DURING CONSTRUCTION. IF DAMAGE OCCURS TO ANY FACILITIES, THE CONTRACTOR SHALL BE HELD RESPONSIBLE FOR THE COST OF REPAIRING OR REPLACING THEM. FAILURE TO COMPLY WITH THESE PROVISIONS MAY RESULT IN ADDITIONAL EXPENSES TO THE PROPOSED PROJECT TO VERIFY THAT ALL WORK CONFIRMS TO DWM'S STANDARDS. ADDITIONAL COST WILL BE AT THE CONTRACTOR'S EXPENSE AND BE AT NO ADDITIONAL COST TO THE DEPARTMENT.

16. PROJECT IS ABOVE THE CTA'S CONGRESS BRANCH BLUE LINE TRACK STRUCTURES, SIGNALS AND OTHER ELECTRICAL EQUIPMENT, AT S. SACRAMENTO BLVD AND I-290. THE CONTRACTOR SHALL USE EXTREME CAUTION WHEN WORKING NEAR AND ABOVE TRACK STRUCTURES, NEAR THE TRACKS AND THEIR FOUNDATIONS, AND BELOW EXISTING SIGNAL & COMMUNICATION CABLES. ALL EXCAVATION AND DEMOLITION WORK, MINIMUM 4'-6" NEAR EXISTING CTA'S STRUCTURES SHALL BE DONE BY HAND. THE CONTRACTOR SHALL PROTECT ALL CTA'S STRUCTURES AND TRAINS FROM CONSTRUCTION DEBRIS. FLAGMEN AT TRACK LEVEL MAY BE REQUIRED IF ANY TRAINS NEED TO BE STOPPED FOR ANY POTENTIALLY DANGEROUS CRANE PICKS OR ANY OTHER WORK THAT MIGHT AFFECT A TRAIN ROUTE, ETC. THE CONTRACTOR SHALL RESTORE ALL DAMAGED STRUCTURES AND UTILITIES TO THE SATISFACTION OF THE CTA.

    SEE THE FOLLOWING LOCATION FOR ACM:
    HTTPS://WWW.TRANSITCHICAGO.COM/ASSETS/1/6/ADJACENT_CONSTRUCTION_MANUAL_MARCH_2022.PDF

    COORDINATE INSURANCE REQUIREMENTS WITH L. LINDA LEE, CPCU, ARM, AIC, AINS, CSM - CTA RISK COMPLIANCE – LAW DEPARTMENT, PHONE: 312-681-2921, EMAIL: LLEE@TRANSITCHICAGO.COM

    THIS WORK IS SUBJECT TO THE REQUIREMENTS ESTABLISHED IN THE CTA ADJACENT CONSTRUCTION MANUAL AND "CTA REQUIREMENTS FOR CONTRACTORS WORKING ALONG THE RIGHT-OF-WAY (R.O.W.)" WHICH CAN BE FOUND HERE: HTTP://WWW.TRANSITCHICAGO.COM/NEARBYCONSTRUCTION/

    COORDINATE ALL ACTIVITIES WITH ABDIN CARRILLO, CONSTRUCTION PROJECT MANAGER III, CAPITAL CONSTRUCTION, PHONE: 312-681-3913, REFERENCE OUC NUMBER: EFP-129689, RE: SAFETY, SECURITY, INSURANCE, FLAGGING SERVICE, ETC.

17. THE CONTRACTOR SHALL CONTACT THE CHICAGO TRANSIT AUTHORITY COORDINATOR, TRAFFIC PLANNING, JACK CHALABIAN, AT JCHALABIAN@TRANSITCHICAGO.COM AT LEAST TWO (2) WEEKS BEFORE ANY BUS SERVICE CHANGES.

PAVEMENT DESIGN

HOT-MIX ASPHALT MIXTURE REQUIREMENTS		QMP
MIXTURE TYPE	AIR VOIDS @ Ndesign	
PAVEMENT RECONSTRUCTION		
POLYMERIZED HOT MIX ASPHALT SURFACE COURSE, IL-9.5, MIX E, N70; 2"	4.0% @ 70 Gyr.	QC/QA
HMA BASE COURSE (HMA BINDER, IL-19.0); 8"	4.0% @ 70 Gyr.	QC/QA
PAVEMENT RESURFACING (SACRAMENTO)		
POLYMERIZED HOT MIX ASPHALT SURFACE COURSE, IL-9.5, MIX E, N70; 2"	4.0% @ 70 Gyr.	QC/QA
SHOULDER REPLACEMENT (I-290)		
HOT MIX ASPHALT SURFACE COURSE, IL-9.5, MIX "D", N70; 1-1/2"	4.0% @ 70 Gyr.	QC/QA
HOT MIX ASPHALT BINDER COURSE, IL-19.0, N70; 3-1/2"	4.0% @ 70 Gyr.	QC/QA
PATCHING		
CLASS D PATCHES (HMA BINDER, IL-19.0)	4.0% @ 70 Gyr.	QC/QA
CLASS D PATCHES (SPECIAL)		
HOT MIX ASPHALT SURFACE COURSE IL-9.5 MIX "D", N70; TOP 2"	4.0% @ 70 Gyr.	QC/QA
HOT MIX ASPHALT BINDER COURSE, IL-19.0, N70	4.0% @ 70 Gyr.	QC/QA
HMA REPLACEMENT OVER PATCHES		
HOT MIX ASPHALT BINDER COURSE IL-19.0, N70	4.0% @ 70 Gyr.	QC/QA
HMA STABILIZATION 6" AT STEEL PLATE BEAM GUARDRAIL		
HOT MIX ASPHALT BINDER COURSE IL-19.0, N70; 6"	4.0% @ 70 Gyr.	QC/QA
SHOULDER RUMBLE STRIP REMOVAL		
HOT MIX ASPHALT SURFACE COURSE, IL-9.5, MIX "D", N70; 2"	4.0% @ 70 Gyr.	QC/QA
QMP Designations: Quality Control/Quality Assurance (QC/QA); Quality Control for Performance (QCP); Pay for Performance (PFP)		

NOTES:

THE CONTRACTOR SHALL PATCH FIRST BEFORE MILLING. PATCHES TO BE CONSTRUCTED TO GRADE. PATCHES INSIDE RESURFACING AREA SHALL THEN BE MILLED AND OVERLAYED DURING RESURFACING.

THE UNIT WEIGHT USED TO CALCULATE ALL HOT-MIX ASPHALT SURFACE MIXTURE QUANTITIES IS 112 LB/SY/IN.

THE "AC TYPE" FOR POLYMERIZED HMA MIXES SHALL BE "SBS/SBR PG 76-22" AND FOR NON-POLYMERIZED HMA THE "AC TYPE" SHALL BE PG 64-22" UNLESS MODIFIED BY RECLAIMED MATERIALS SPECIAL PROVISIONS.

COMMITMENTS

1. ADJACENT I-290 OVERHEAD BRIDGES SHALL NOT BE CLOSED/DETOURED CONCURRENTLY DURING CONSTRUCTION.

	CODE NO.	ITEM	UNIT	TOTAL QUANTITY	CONSTRUCTION CODE						
					90% FED 10% STATE	100% STATE	90% FED 10% STATE	90% FED 10% STATE	100% CDOT	100% CDOT	100% CDOT
					ROADWAY	SAFETY	BRIDGE	ROADWAY LIGHTING		TRAFFIC SIGNALS	
					0004	0005	0013	0021	0021	0021	0021
					URBAN	URBAN	SN 016-0754	IDOT	CDOT	CONGRESS	VAN BUREN
	20101000	TEMPORARY FENCE	FOOT	1412	1412						
	20200100	EARTH EXCAVATION	CU YD	4370	4370						
	20201200	REMOVAL AND DISPOSAL OF UNSUITABLE MATERIAL	CU YD	344	344						
	20800150	TRENCH BACKFILL	CU YD	71	71						
	21001000	GEOTECHNICAL FABRIC FOR GROUND STABILIZATION	SQ YD	1694	1694						
	21101505	TOPSOIL EXCAVATION AND PLACEMENT	CU YD	1015	1015						
*	25000210	SEEDING, CLASS 2A	ACRE	1.25	1.25						
*	25000310	SEEDING, CLASS 4	ACRE	0.25	0.25						
*	25000320	SEEDING, CLASS 5	ACRE	0.25	0.25						
*	25000400	NITROGEN FERTILIZER NUTRIENT	POUND	383	383						
*	25000600	POTASSIUM FERTILIZER NUTRIENT	POUND	383	383						
	25000750	MOWING	ACRE	10.00	10.00						
*	25003210	INTERSEEDING, CLASS 2A	ACRE	1.50	1.50						
*	25100115	MULCH, METHOD 2	ACRE	1.25	1.25						

X = SPECIALTY ITEM

MODEL: Default
FILE NAME: \\nasuni-fil\Data\Projects\10-IL\14411-IDOT - Sacramento and Paulina over I-290\Work\QAQC\Sacramento\2025.10.16-Revised PSE Plans\Revised CAD Files\D162K65-sht-SQQ.dgn

HORNER SHIFRIN
WWW. HORNERSHIFRIN .COM

USER NAME = omartinez	DESIGNED -	REVISED -	
	DRAWN -	REVISED -	
PLOT SCALE = 2.0000 ' / in.	CHECKED -	REVISED -	
PLOT DATE = 10/17/2025	DATE -	REVISED -	

STATE OF ILLINOIS
DEPARTMENT OF TRANSPORTATION

SACRAMENTO BOULEVARD OVER FAI-290 (EISENHOWER EXPRESSWAY)
SUMMARY OF QUANTITIES

SCALE: NTS | SHEET 1 OF 20 SHEETS | STA. TO STA.

F.A.I. RTE.	SECTION	COUNTY	TOTAL SHEETS	SHEET NO.
290	2019-192-B-R	COOK	237	5

CONTRACT NO. 62K65
ILLINOIS FED. AID PROJECT

	CODE NO.	ITEM	UNIT	TOTAL QUANTITY	CONSTRUCTION CODE						
					90% FED 10% STATE	100% STATE	90% FED 10% STATE	90% FED 10% STATE	100% CDOT	100% CDOT	100% CDOT
					ROADWAY	SAFETY	BRIDGE	ROADWAY LIGHTING		TRAFFIC SIGNALS	
					0004	0005	0013	0021	0021	0021	0021
					URBAN	URBAN	SN 016-0754	IDOT	CDOT	CONGRESS	VAN BUREN
*	25100630	EROSION CONTROL BLANKET	SQ YD	5994	5994						
*	25200110	SODDING, SALT TOLERANT	SQ YD	24	24						
	25200200	SUPPLEMENTAL WATERING	UNIT	107	107						
	28000250	TEMPORARY EROSION CONTROL SEEDING	POUND	377	377						
*	28000400	PERIMETER EROSION BARRIER	FOOT	1634	1634						
*	28000510	INLET FILTERS	EACH	42	42						
	30300001	AGGREGATE SUBGRADE IMPROVEMENT	CU YD	607	357		250				
	30300112	AGGREGATE SUBGRADE IMPROVEMENT 12"	SQ YD	2332	2332						
	31101200	SUBBASE GRANULAR MATERIAL, TYPE B 4"	SQ YD	1100	1100						
	35300500	PORTLAND CEMENT CONCRETE BASE COURSE 10"	SQ YD	234	234						
	35501316	HOT-MIX ASPHALT BASE COURSE, 8"	SQ YD	1056	1056						
	40600275	BITUMINOUS MATERIALS (PRIME COAT)	POUND	3452	3452						
	40600290	BITUMINOUS MATERIALS (TACK COAT)	POUND	1620	1620						

X = SPECIALTY ITEM

MODEL: Default
FILE NAME: \\nasuni-fil\Data\Projects\10-IL\14411-IDOT - Sacramento and Paulina over I-290\Work\QAQC\Sacramento\2025.10.16-Revised PSE Plans\Revised CAD Files\D162K65-sht-SQQ.dgn

HORNER SHIFRIN
WWW. HORNERSHIFRIN .COM

USER NAME = omartinez	DESIGNED -	REVISED -	
	DRAWN -	REVISED -	
PLOT SCALE = 2.0000 ' / in.	CHECKED -	REVISED -	
PLOT DATE = 10/17/2025	DATE -	REVISED -	

STATE OF ILLINOIS
DEPARTMENT OF TRANSPORTATION

SACRAMENTO BOULEVARD OVER FAI-290 (EISENHOWER EXPRESSWAY)
SUMMARY OF QUANTITIES

SCALE: NTS | SHEET 2 OF 20 SHEETS | STA. TO STA.

F.A.I. RTE.	SECTION	COUNTY	TOTAL SHEETS	SHEET NO.
290	2019-192-B-R	COOK	237	6
		CONTRACT NO. 62K65		
		ILLINOIS	FED. AID PROJECT	

REV-SEP

CODE NO.	ITEM	UNIT	TOTAL QUANTITY	CONSTRUCTION CODE						
				90% FED 10% STATE	100% STATE	90% FED 10% STATE	90% FED 10% STATE	100% CDOT	100% CDOT	100% CDOT
				ROADWAY	SAFETY	BRIDGE	ROADWAY LIGHTING		TRAFFIC SIGNALS	
				0004	0005	0013	0021	0021	0021	0021
				URBAN	URBAN	SN 016-0754	IDOT	CDOT	CONGRESS	VAN BUREN
40600370	LONGITUDINAL JOINT SEALANT	FOOT	1499	1499						
40600400	MIXTURE FOR CRACKS, JOINTS, AND FLANGEWAYS	TON	0.5	0.5						
40600982	HOT-MIX ASPHALT SURFACE REMOVAL - BUTT JOINT	SQ YD	124	124						
40601005	HOT-MIX ASPHALT REPLACEMENT OVER PATCHES	TON	62	62						
40603085	HOT-MIX ASPHALT BINDER COURSE, IL-19.0, N70	TON	46	46						
40604062	HOT-MIX ASPHALT SURFACE COURSE, IL-9.5, MIX "D", N70	TON	20	20						
40604172	POLYMERIZED HOT-MIX ASPHALT SURFACE COURSE, IL-9.5, MIX "E", N70	TON	277	277						
42000060	WELDED WIRE REINFORCEMENT	SQ YD	193	193						
42000080	PAVEMENT CONNECTOR (PCC) FOR BRIDGE APPROACH SLAB	SQ YD	193	193						
42001300	PROTECTIVE COAT	SQ YD	2179	2179						
42300400	PORTLAND CEMENT CONCRETE DRIVEWAY PAVEMENT, 8 INCH	SQ YD	74	74						
42400200	PORTLAND CEMENT CONCRETE SIDEWALK 5 INCH	SQ FT	6015	6015						
42400410	PORTLAND CEMENT CONCRETE SIDEWALK 8 INCH	SQ FT	1762	1762						
44000100	PAVEMENT REMOVAL	SQ YD	1745	1745						

X = SPECIALTY ITEM

MODEL: Default
FILE NAME: \\nasuni-fil\Data\Projects\10-IL\14411-IDOT - Sacramento and Paulina over I-290\Work\QAQC\Sacramento\2025.10.16-Revised PSE Plans\Revised CAD Files\D162K65-sht-SQQ.dgn

HORNER SHIFRIN
WWW. HORNERSHIFRIN .COM

USER NAME = omartinez	DESIGNED -	REVISED -	
	DRAWN -	REVISED -	
PLOT SCALE = 2.0000 ' / in.	CHECKED -	REVISED -	
PLOT DATE = 10/17/2025	DATE -	REVISED -	

STATE OF ILLINOIS
DEPARTMENT OF TRANSPORTATION

SACRAMENTO BOULEVARD OVER FAI-290 (EISENHOWER EXPRESSWAY)
SUMMARY OF QUANTITIES

SCALE: NTS | SHEET 3 OF 20 SHEETS | STA. TO STA.

F.A.I. RTE.	SECTION	COUNTY	TOTAL SHEETS	SHEET NO.
290	2019-192-B-R	COOK	237	7

CONTRACT NO. 62K65
ILLINOIS FED. AID PROJECT

CODE NO.	ITEM	UNIT	TOTAL QUANTITY	CONSTRUCTION CODE						
				90% FED 10% STATE	100% STATE	90% FED 10% STATE	90% FED 10% STATE	100% CDOT	100% CDOT	100% CDOT
				ROADWAY	SAFETY	BRIDGE	ROADWAY LIGHTING		TRAFFIC SIGNALS	
				0004	0005	0013	0021	0021	0021	0021
				URBAN	URBAN	SN 016-0754	IDOT	CDOT	CONGRESS	VAN BUREN
44000157	HOT-MIX ASPHALT SURFACE REMOVAL, 2"	SQ YD	1440	1440						
44000200	DRIVEWAY PAVEMENT REMOVAL	SQ YD	72	72						
44000500	COMBINATION CURB AND GUTTER REMOVAL	FOOT	1458	1458						
44000600	SIDEWALK REMOVAL	SQ FT	7030	7030						
44001980	CONCRETE BARRIER REMOVAL	FOOT	277	277						
44002208	HOT-MIX ASPHALT REMOVAL OVER PATCHES, 2"	SQ YD	553	553						
44004250	PAVED SHOULDER REMOVAL	SQ YD	233	233						
44201765	CLASS D PATCHES, TYPE II, 10 INCH	SQ YD	70	70						
44201769	CLASS D PATCHES, TYPE III, 10 INCH	SQ YD	154	154						
44201771	CLASS D PATCHES, TYPE IV, 10 INCH	SQ YD	246	246						
50101500	REMOVAL OF EXISTING SUPERSTRUCTURES	EACH	1			1				
50102400	CONCRETE REMOVAL	CU YD	625.6			625.6				
50157300	PROTECTIVE SHIELD	SQ YD	1612			1612				
50200100	STRUCTURE EXCAVATION	CU YD	3809			3809				

X = SPECIALTY ITEM

MODEL: Default
FILE NAME: \\nasuni-fil\Data\Projects\10-IL\14411-IDOT - Sacramento and Paulina over I-290\Work\QAQC\Sacramento\2025.10.16-Revised PSE Plans\Revised CAD Files\D162K65-sht-SQQ.dgn

HORNER SHIFRIN
WWW. HORNERSHIFRIN .COM

USER NAME = omartinez	DESIGNED -	REVISED -	
	DRAWN -	REVISED -	
PLOT SCALE = 2.0000 ' / in.	CHECKED -	REVISED -	
PLOT DATE = 10/17/2025	DATE -	REVISED -	

STATE OF ILLINOIS
DEPARTMENT OF TRANSPORTATION

SACRAMENTO BOULEVARD OVER FAI-290 (EISENHOWER EXPRESSWAY)
SUMMARY OF QUANTITIES

SCALE: NTS | SHEET 4 OF 20 SHEETS | STA. TO STA.

F.A.I. RTE.	SECTION	COUNTY	TOTAL SHEETS	SHEET NO.
290	2019-192-B-R	COOK	237	8

CONTRACT NO. 62K65
ILLINOIS FED. AID PROJECT

					CONSTRUCTION CODE						
					90% FED 10% STATE	100% STATE	90% FED 10% STATE	90% FED 10% STATE	100% CDOT	100% CDOT	100% CDOT
					ROADWAY	SAFETY	BRIDGE	ROADWAY LIGHTING		TRAFFIC SIGNALS	
CODE NO.	ITEM	UNIT	TOTAL QUANTITY		0004 URBAN	0005 URBAN	0013 SN 016-0754	0021 IDOT	0021 CDOT	0021 CONGRESS	0021 VAN BUREN
50200450	REMOVAL AND DISPOSAL OF UNSUITABLE MATERIAL FOR STRUCTURES	CU YD	250				250				
50300225	CONCRETE STRUCTURES	CU YD	150.0				150.0				
50300255	CONCRETE SUPERSTRUCTURE	CU YD	795.3				795.3				
50300260	BRIDGE DECK GROOVING	SQ YD	1637				1637				
50300300	PROTECTIVE COAT	SQ YD	2574				2574				
50301350	CONCRETE SUPERSTRUCTURE (APPROACH SLAB)	CU YD	193.1				193.1				
* 50500105	FURNISHING AND ERECTING STRUCTURAL STEEL	L SUM	1				1				
50500505	STUD SHEAR CONNECTORS	EACH	15330				15330				
50800205	REINFORCEMENT BARS, EPOXY COATED	POUND	262,260				262,260				
50900105	ALUMINUM RAILING, TYPE L	FOOT	104				104				
50901739	BRIDGE FENCE RAILING, CURVED	FOOT	494				494				
* 51201900	FURNISHING STEEL PILES HP14X89	FOOT	1125				1125				
* 51202305	DRIVING PILES	FOOT	1125				1125				
* 51203900	TEST PILE STEEL HP14X89	EACH	2				2				

X = SPECIALTY ITEM

MODEL: Default
FILE NAME: \\cdaurel#1\Data\Projects\1621\14411-HDOT - Sacramento and Paulina over I-290\Work\QAQC\Sacramento\2025_10_16-Revised PSE Plans\Revised CAD Files\D162k65-smt-SQQ.dgn

	CODE NO.	ITEM	UNIT	TOTAL QUANTITY	CONSTRUCTION CODE						
					90% FED 10% STATE	100% STATE	90% FED 10% STATE	90% FED 10% STATE	100% CDOT	100% CDOT	100% CDOT
					ROADWAY	SAFETY	BRIDGE	ROADWAY LIGHTING		TRAFFIC SIGNALS	
					0004	0005	0013	0021	0021	0021	0021
					URBAN	URBAN	SN 016-0754	IDOT	CDOT	CONGRESS	VAN BUREN
*	51204650	PILE SHOES	EACH	20			20				
*	51500100	NAME PLATES	EACH	1			1				
	52100010	ELASTOMERIC BEARING ASSEMBLY, TYPE I	EACH	20			20				
	52100510	ANCHOR BOLTS, 3/4"	EACH	40			40				
	52100520	ANCHOR BOLTS, 1"	EACH	40			40				
	52200010	TEMPORARY SHEET PILING	SQ FT	2090			2090				
	52200500	MECHANICALLY STABILIZED EARTH RETAINING WALL	SQ FT	4357			4357				
	550A0050	STORM SEWERS, CLASS A, TYPE 1 12"	FOOT	55	55						
	55100300	STORM SEWER REMOVAL 8"	FOOT	70	70						
	55100400	STORM SEWER REMOVAL 10"	FOOT	20	20						
	55100500	STORM SEWER REMOVAL 12"	FOOT	60	60						
	58700300	CONCRETE SEALER	SQ FT	3786			3786				
	59000200	EPOXY CRACK INJECTION	FOOT	19			19				
	60108204	PIPE UNDERDRAINS, TYPE 2, 4"	FOOT	334	334						

X = SPECIALTY ITEM

MODEL: Default
FILE NAME: \\nasuni-fil\Data\Projects\10-IL\14411-IDOT - Sacramento and Paulina over I-290\Work\QAQC\Sacramento\2025.10.16-Revised PSE Plans\Revised CAD Files\D162K65-sht-SQQ.dgn

HORNER SHIFRIN
WWW. HORNERSHIFRIN .COM

USER NAME = omartinez	DESIGNED -	REVISED -	
	DRAWN -	REVISED -	
PLOT SCALE = 2.0000 ' / in.	CHECKED -	REVISED -	
PLOT DATE = 10/17/2025	DATE -	REVISED -	

STATE OF ILLINOIS
DEPARTMENT OF TRANSPORTATION

SACRAMENTO BOULEVARD OVER FAI–290 (EISENHOWER EXPRESSWAY)
SUMMARY OF QUANTITIES

SCALE: NTS | SHEET 6 OF 20 SHEETS | STA. TO STA.

F.A.I. RTE.	SECTION	COUNTY	TOTAL SHEETS	SHEET NO.
290	2019-192-B-R	COOK	237	10
		CONTRACT NO. 62K65		
		ILLINOIS	FED. AID PROJECT	

					CONSTRUCTION CODE						
					90% FED 10% STATE	100% STATE	90% FED 10% STATE	90% FED 10% STATE	100% CDOT	100% CDOT	100% CDOT
					ROADWAY	SAFETY	BRIDGE	ROADWAY LIGHTING		TRAFFIC SIGNALS	
CODE NO.	ITEM	UNIT	TOTAL QUANTITY		0004	0005	0013	0021	0021	0021	0021
					URBAN	URBAN	SN 016-0754	IDOT	CDOT	CONGRESS	VAN BUREN
60146304	PIPE UNDERDRAINS FOR STRUCTURES 4"	FOOT	388				388				
60146307	PIPE UNDERDRAINS FOR STRUCTURES (SPECIAL) 6"	FOOT	352	352							
60201340	CATCH BASINS, TYPE A, 4'-DIAMETER, TYPE 24 FRAME AND GRATE	EACH	1	1							
60208240	CATCH BASINS, TYPE C, TYPE 24 FRAME AND GRATE	EACH	1	1							
60250200	CATCH BASINS TO BE ADJUSTED	EACH	7	7							
60255500	MANHOLES TO BE ADJUSTED	EACH	2	2							
60300305	FRAMES AND LIDS TO BE ADJUSTED	EACH	3	3							
60500050	REMOVING CATCH BASINS	EACH	6	6							
60500060	REMOVING INLETS	EACH	10	10							
60602800	CONCRETE GUTTER, TYPE B	FOOT	152	152							
60605000	COMBINATION CONCRETE CURB AND GUTTER, TYPE B-6.24	FOOT	695.0	695.0							
60618320	CONCRETE MEDIAN SURFACE, 6 INCH	SQ FT	1871	1871							
* 63100085	TRAFFIC BARRIER TERMINAL, TYPE 6	EACH	2	2							
* 63100167	TRAFFIC BARRIER TERMINAL, TYPE 1 (SPECIAL) TANGENT	EACH	2	2							

X = SPECIALTY ITEM

MODEL: Default
FILE NAME: \\cdaurel#1\Data\Projects\1621\14411-IDOT - Sacramento and Paulina over I-290\Work\QAQC\Sacramento\2025_10_16-Revised PSE Plans\Revised CAD Files\D162k65-smt-SQQ.dgn

					CONSTRUCTION CODE						
					90% FED 10% STATE	100% STATE	90% FED 10% STATE	90% FED 10% STATE	100% CDOT	100% CDOT	100% CDOT
					ROADWAY	SAFETY	BRIDGE	ROADWAY LIGHTING		TRAFFIC SIGNALS	
	CODE NO.	ITEM	UNIT	TOTAL QUANTITY	0004 URBAN	0005 URBAN	0013 SN 016-0754	0021 IDOT	0021 CDOT	0021 CONGRESS	0021 VAN BUREN
	63700280	CONCRETE BARRIER, DOUBLE FACE, 44 INCH HEIGHT	FOOT	421	421						
	64200116	SHOULDER RUMBLE STRIPS, 16 INCH	FOOT	2828	2828						
	66400305	CHAIN LINK FENCE, 6'	FOOT	439	439						
X	66900200	NON-SPECIAL WASTE DISPOSAL	CU YD	6000	6000						
X	66900530	SOIL DISPOSAL ANALYSIS	EACH	5	5						
X	66901001	REGULATED SUBSTANCES PRE-CONSTRUCTION PLAN	L SUM	1	1						
X	66901003	REGULATED SUBSTANCES FINAL CONSTRUCTION REPORT	L SUM	1	1						
X	66901005	ENGINEERED BARRIER	SQ YD	2200	2200						
X	66901006	REGULATED SUBSTANCES MONITORING	CAL DA	116	116						
	67100100	MOBILIZATION	L SUM	1	1						
	70107025	CHANGEABLE MESSAGE SIGN	CAL DA	112	112						
	70200100	NIGHTTIME WORK ZONE LIGHTING	L SUM	1	1						
	70300100	SHORT TERM PAVEMENT MARKING	FOOT	3453	3453						
	70300150	SHORT TERM PAVEMENT MARKING REMOVAL	SQ FT	16299	16299						

X = SPECIALTY ITEM

MODEL: Default
FILE NAME: \\cdaurel#1\Data\Projects\1621\14411-HDOT - Sacramento and Paulina over I-290\Work\QAQC\Sacramento\2025_10_16-Revised PSE Plans\Revised CAD Files\D162K65-cnt-SOQ.dgn

CODE NO.	ITEM	UNIT	TOTAL QUANTITY	CONSTRUCTION CODE						
				90% FED 10% STATE	100% STATE	90% FED 10% STATE	90% FED 10% STATE	100% CDOT	100% CDOT	100% CDOT
				ROADWAY	SAFETY	BRIDGE	ROADWAY LIGHTING		TRAFFIC SIGNALS	
				0004	0005	0013	0021	0021	0021	0021
				URBAN	URBAN	SN 016-0754	IDOT	CDOT	CONGRESS	VAN BUREN
70300241	TEMPORARY PAVEMENT MARKING - LINE 6"- PAINT	FOOT	1625	1625						
70303100	TEMPORARY PAVEMENT MARKING LETTERS AND SYMBOLS - MODIFIED URETHANE	SQ FT	344	344						
70303120	TEMPORARY PAVEMENT MARKING - LINE 4" - MODIFIED URETHANE	FOOT	8451	8451						
70303130	TEMPORARY PAVEMENT MARKING - LINE 6" - MODIFIED URETHANE	FOOT	1814	1814						
70303140	TEMPORARY PAVEMENT MARKING - LINE 8" - MODIFIED URETHANE	FOOT	602	602						
70303160	TEMPORARY PAVEMENT MARKING - LINE 12"- MODIFIED URETHANE	FOOT	272	272						
70303210	TEMPORARY PAVEMENT MARKING - LINE 24"- MODIFIED URETHANE	FOOT	577	577						
70307100	TEMPORARY PAVEMENT MARKING LETTERS AND SYMBOLS - TYPE IV TAPE	SQ FT	549	549						
70307120	TEMPORARY PAVEMENT MARKING - LINE 4" - TYPE IV TAPE	FOOT	28281	28281						
70307125	TEMPORARY PAVEMENT MARKING - LINE 5" - TYPE IV TAPE	FOOT	9840	9840						
70307130	TEMPORARY PAVEMENT MARKING - LINE 6" - TYPE IV TAPE	FOOT	1204	1204						
70307140	TEMPORARY PAVEMENT MARKING - LINE 8" - TYPE IV TAPE	FOOT	1627	1627						
70307160	TEMPORARY PAVEMENT MARKING - LINE 12"- TYPE IV TAPE	FOOT	453	453						
70307210	TEMPORARY PAVEMENT MARKING - LINE 24"- TYPE IV TAPE	FOOT	522	522						

X = SPECIALTY ITEM

MODEL: Default
FILE NAME: \\nasuni-fil\Data\Projects\10-IL\14411-IDOT - Sacramento and Paulina over I-290\Work\QAQC\Sacramento\2025.10.16-Revised PSE Plans\Revised CAD Files\D162K65-sht-SOQ.dgn

HORNER SHIFRIN
WWW. HORNERSHIFRIN .COM

USER NAME = omartinez	DESIGNED -	REVISED -	
	DRAWN -	REVISED -	
PLOT SCALE = 2.0000 ' / in.	CHECKED -	REVISED -	
PLOT DATE = 10/17/2025	DATE -	REVISED -	

STATE OF ILLINOIS
DEPARTMENT OF TRANSPORTATION

SACRAMENTO BOULEVARD OVER FAI-290 (EISENHOWER EXPRESSWAY)
SUMMARY OF QUANTITIES

SCALE: NTS | SHEET 9 OF 20 SHEETS | STA. TO STA.

F.A.I. RTE.	SECTION	COUNTY	TOTAL SHEETS	SHEET NO.
290	2019-192-B-R	COOK	237	13

CONTRACT NO. 62K65
ILLINOIS FED. AID PROJECT

	CODE NO.	ITEM	UNIT	TOTAL QUANTITY	CONSTRUCTION CODE						
					90% FED 10% STATE	100% STATE	90% FED 10% STATE	90% FED 10% STATE	100% CDOT	100% CDOT	100% CDOT
					ROADWAY	SAFETY	BRIDGE	ROADWAY LIGHTING		TRAFFIC SIGNALS	
					0004	0005	0013	0021	0021	0021	0021
					URBAN	URBAN	SN 016-0754	IDOT	CDOT	CONGRESS	VAN BUREN
	70400100	TEMPORARY CONCRETE BARRIER	FOOT	1087.5	1087.5						
	70400125	PINNING TEMPORARY CONCRETE BARRIER	EACH	369	369						
	70400200	RELOCATE TEMPORARY CONCRETE BARRIER	FOOT	562.5	562.5						
	70600260	IMPACT ATTENUATORS, TEMPORARY (FULLY REDIRECTIVE, NARROW), TEST LEVEL 3	EACH	2	2						
	70600332	IMPACT ATTENUATORS, RELOCATE (FULLY REDIRECTIVE, NARROW), TEST LEVEL 3	EACH	2	2						
X	72000100	SIGN PANEL - TYPE 1	SQ FT	140	140						
X	72000200	SIGN PANEL - TYPE 2	SQ FT	30	30						
X	72400100	REMOVE SIGN PANEL ASSEMBLY - TYPE A	EACH	3	3						
*	72400205	REMOVE AND RELOCATE SIGN PANEL ASSEMBLY - TYPE A	EACH	1	1						
*	72400210	REMOVE AND RELOCATE SIGN PANEL ASSEMBLY - TYPE B	EACH	1	1						
X	72400310	REMOVE SIGN PANEL - TYPE 1	SQ FT	95	95						
*	72400730	RELOCATE SIGN PANEL - TYPE 3	SQ FT	80	80						
*	73000100	WOOD SIGN SUPPORT	FOOT	103	103						
X	73304000	OVERHEAD SIGN STRUCTURE - BRIDGE MOUNTED	FOOT	36			36				

X = SPECIALTY ITEM

MODEL: Default
FILE NAME: \\nasuni-fil\Data\Projects\10-IL\14411-IDOT - Sacramento and Paulina over I-290\Work\QAQC\Sacramento\2025.10.16-Revised PSE Plans\Revised CAD Files\D162K65-sht-SOQ.dgn

HORNER SHIFRIN
WWW. HORNERSHIFRIN .COM

USER NAME = omartinez	DESIGNED -	REVISED -	
	DRAWN -	REVISED -	
PLOT SCALE = 2.0000 ' / in.	CHECKED -	REVISED -	
PLOT DATE = 10/17/2025	DATE -	REVISED -	

STATE OF ILLINOIS
DEPARTMENT OF TRANSPORTATION

SACRAMENTO BOULEVARD OVER FAI-290 (EISENHOWER EXPRESSWAY)
SUMMARY OF QUANTITIES

SCALE: NTS | SHEET 10 OF 20 SHEETS | STA. TO STA.

F.A.I. RTE.	SECTION	COUNTY	TOTAL SHEETS	SHEET NO.
290	2019-192-B-R	COOK	237	14
		CONTRACT NO. 62K65		
		ILLINOIS	FED. AID PROJECT	

	CODE NO.	ITEM	UNIT	TOTAL QUANTITY	CONSTRUCTION CODE						
					90% FED 10% STATE	100% STATE	90% FED 10% STATE	90% FED 10% STATE	100% CDOT	100% CDOT	100% CDOT
					ROADWAY	SAFETY	BRIDGE	ROADWAY LIGHTING		TRAFFIC SIGNALS	
					0004	0005	0013	0021	0021	0021	0021
					URBAN	URBAN	SN 016-0754	IDOT	CDOT	CONGRESS	VAN BUREN
X	73602000	REMOVE OVERHEAD SIGN STRUCTURE - BRIDGE MOUNTED	EACH	2			2				
*	73700100	REMOVE GROUND MOUNTED SIGN SUPPORT	EACH	4	4						
*	73700200	REMOVE CONCRETE FOUNDATION - GROUND MOUNT	EACH	3	3						
X	78000100	THERMOPLASTIC PAVEMENT MARKING - LETTERS AND SYMBOLS	SQ FT	255	255						
X	78000200	THERMOPLASTIC PAVEMENT MARKING - LINE 4"	FOOT	7676	7676						
X	78000300	THERMOPLASTIC PAVEMENT MARKING - LINE 5"	FOOT	2460	2460						
X	78000400	THERMOPLASTIC PAVEMENT MARKING - LINE 6"	FOOT	1357	1357						
X	78000500	THERMOPLASTIC PAVEMENT MARKING - LINE 8"	FOOT	477	477						
X	78000600	THERMOPLASTIC PAVEMENT MARKING - LINE 12"	FOOT	287	287						
X	78000650	THERMOPLASTIC PAVEMENT MARKING - LINE 24"	FOOT	577	577						
	78004635	PREFORMED PLASTIC PAVEMENT MARKING, TYPE D - STANDARD - LINE 7"	FOOT	87	87						
X	78006100	PREFORMED THERMOPLASTIC PAVEMENT MARKING - LETTERS AND SYMBOLS	SQ FT	38	38						
X	78009000	MODIFIED URETHANE PAVEMENT MARKING - LETTERS AND SYMBOLS	SQ FT	51	51						
X	78009004	MODIFIED URETHANE PAVEMENT MARKING - LINE 4"	FOOT	689	689						
X	78009006	MODIFIED URETHANE PAVEMENT MARKING - LINE 6"	FOOT	277	277						
*	78011040	GROOVING FOR RECESSED PAVEMENT MARKING 8"	FOOT	87	87						

X = SPECIALTY ITEM

MODEL: Default
FILE NAME: \\nasuni-fil\Data\Projects\10-IL\14411-IDOT - Sacramento and Paulina over I-290\Work\QAQC\Sacramento\2025.10.16-Revised PSE Plans\Revised CAD Files\D162K65-sht-SOQ.dgn

HORNER SHIFRIN
WWW. HORNERSHIFRIN .COM

USER NAME = omartinez	DESIGNED -	REVISED -	
	DRAWN -	REVISED -	
PLOT SCALE = 2.0000 ' / in.	CHECKED -	REVISED -	
PLOT DATE = 10/17/2025	DATE -	REVISED -	

STATE OF ILLINOIS
DEPARTMENT OF TRANSPORTATION

SACRAMENTO BOULEVARD OVER FAI-290 (EISENHOWER EXPRESSWAY)
SUMMARY OF QUANTITIES

SCALE: NTS | SHEET 11 OF 20 SHEETS | STA. TO STA.

F.A.I. RTE.	SECTION	COUNTY	TOTAL SHEETS	SHEET NO.
290	2019-192-B-R	COOK	237	15
		CONTRACT NO. 62K65		
		ILLINOIS	FED. AID PROJECT	

REV-SEP

	CODE NO.	ITEM	UNIT	TOTAL QUANTITY	CONSTRUCTION CODE: 90% FED 10% STATE ROADWAY 0004 URBAN	100% STATE SAFETY 0005 URBAN	90% FED 10% STATE BRIDGE 0013 SN 016-0754	90% FED 10% STATE ROADWAY LIGHTING 0021 IDOT	100% CDOT ROADWAY LIGHTING 0021 CDOT	100% CDOT TRAFFIC SIGNALS 0021 CONGRESS	100% CDOT TRAFFIC SIGNALS 0021 VAN BUREN
	78300202	PAVEMENT MARKING REMOVAL - WATER BLASTING	SQ FT	10005	10005						
*	81028200	UNDERGROUND CONDUIT, GALVANIZED STEEL, 2" DIA.	FOOT	60					60		
*	81028350	UNDERGROUND CONDUIT, PVC, 2" DIA.	FOOT	240					240		
*	81029102	UNDERGROUND CONDUIT, 2" DIA, PVC COATED GALVANIZED STEEL	FOOT	19							19
X	81100320	CONDUIT ATTACHED TO STRUCTURE, 1" DIA., PVC COATED GALVANIZED STEEL	FOOT	250				250			
X	81100600	CONDUIT ATTACHED TO STRUCTURE, 2" DIA., GALVANIZED STEEL	FOOT	486						486	
X	81100805	CONDUIT ATTACHED TO STRUCTURE, 3" DIA., PVC COATED GALVANIZED STEEL	FOOT	30				30			
X	81200230	CONDUIT EMBEDDED IN STRUCTURE, 2" DIA., PVC	FOOT	730					730		
X	81300220	JUNCTION BOX, STAINLESS STEEL, ATTACHED TO STRUCTURE, 6" X 6" X 4"	EACH	8				8			
X	81300530	JUNCTION BOX, STAINLESS STEEL, ATTACHED TO STRUCTURE, 12" X 10" X 6"	EACH	4				4			
X	81300830	JUNCTION BOX, STAINLESS STEEL, ATTACHED TO STRUCTURE, 18" X 18" X 8"	EACH	2				2			
X	87301790	ELECTRIC CABLE IN CONDUIT, SERVICE, NO. 2 2C	FOOT	544						365	179
X	81702110	ELECTRIC CABLE IN CONDUIT, 600V (XLP-TYPE USE) 1/C NO. 10	FOOT	1695				1695			
X	81800230	AERIAL CABLE, 2-1/C NO. 6 WITH MESSENGER WIRE	FOOT	362					362		

X = SPECIALTY ITEM

	CODE NO.	ITEM	UNIT	TOTAL QUANTITY	CONSTRUCTION CODE						
					90% FED 10% STATE	100% STATE	90% FED 10% STATE	90% FED 10% STATE	100% CDOT	100% CDOT	100% CDOT
					ROADWAY	SAFETY	BRIDGE	ROADWAY LIGHTING		TRAFFIC SIGNALS	
					0004	0005	0013	0021	0021	0021	0021
					URBAN	URBAN	SN 016-0754	IDOT	CDOT	CONGRESS	VAN BUREN
X	82110026	LUMINAIRE, LED, UNDERPASS, SUSPENDED, OUTPUT DESIGNATION D	EACH	8				8			
X	84200500	REMOVAL OF LIGHTING UNIT, SALVAGE	EACH	13					13		
X	84200600	REMOVAL OF LIGHTING UNIT, NO SALVAGE	EACH	8				8			
X	87502640	TRAFFIC SIGNAL POST, ALUMINUM, 10'	EACH	6						3	3
X	88040070	SIGNAL HEAD, POLYCARBONATE, LED, 3-SECTION, BRACKET MOUNTED	EACH	5						3	2
X	88040090	SIGNAL HEAD, POLYCARBONATE, LED, 3-SECTION, MAST ARM MOUNTED	EACH	9						4	5
X	88040110	SIGNAL HEAD, POLYCARBONATE, LED, 4-SECTION, BRACKET MOUNTED	EACH	2						1	1
X	88040120	SIGNAL HEAD, POLYCARBONATE, LED, 4-SECTION, MAST ARM MOUNTED	EACH	2						1	1
X	88102825	PEDESTRIAN SIGNAL HEAD, POLYCARBONATE, LED, 1-FACE, BRACKET MOUNTED WITH COUNTDOWN TIMER	EACH	12						6	6
X	89000100	TEMPORARY TRAFFIC SIGNAL INSALLATION	EACH	2						1	1
X	89502375	REMOVE EXISTING TRAFFIC SIGNAL EQUIPMENT	EACH	2						1	1
*	89502380	REMOVE EXISTING HANDHOLE	EACH	3					3		
	Z0004552	APPROACH SLAB REMOVAL	SQ YD	562	562						
	Z0012754	STRUCTURAL REPAIR OF CONCRETE (DEPTH EQUAL TO OR LESS THAN 5 INCHES)	SQ FT	661			661				

X = SPECIALTY ITEM

MODEL: Default
FILE NAME: \\nasuni-fil\Data\Projects\10-IL\14411-IDOT - Sacramento and Paulina over I-290\Work\QAQC\Sacramento\2025.10.16-Revised PSE Plans\Revised CAD Files\D162K65-sht-SQQ.dgn

HORNER SHIFRIN
WWW. HORNERSHIFRIN .COM

USER NAME = omartinez	DESIGNED -	REVISED -	
	DRAWN -	REVISED -	
PLOT SCALE = 2.0000 ' / in.	CHECKED -	REVISED -	
PLOT DATE = 10/17/2025	DATE -	REVISED -	

STATE OF ILLINOIS
DEPARTMENT OF TRANSPORTATION

SACRAMENTO BOULEVARD OVER FAI–290 (EISENHOWER EXPRESSWAY)
SUMMARY OF QUANTITIES

SCALE: NTS | SHEET 13 OF 20 SHEETS | STA. | TO STA.

F.A.I. RTE.	SECTION	COUNTY	TOTAL SHEETS	SHEET NO.
290	2019-192-B-R	COOK	237	17
		CONTRACT NO. 62K65		
		ILLINOIS	FED. AID PROJECT	

	CODE NO.	ITEM	UNIT	TOTAL QUANTITY	CONSTRUCTION CODE						
					90% FED 10% STATE	100% STATE	90% FED 10% STATE	90% FED 10% STATE	100% CDOT	100% CDOT	100% CDOT
					ROADWAY	SAFETY	BRIDGE	ROADWAY LIGHTING		TRAFFIC SIGNALS	
					0004	0005	0013	0021	0021	0021	0021
					URBAN	URBAN	SN 016-0754	IDOT	CDOT	CONGRESS	VAN BUREN
	Z0012755	STRUCTURAL REPAIR OF CONCRETE (DEPTH GREATER THAN 5 INCHES)	SQ FT	44			44				
	Z0013798	CONSTRUCTION LAYOUT	L SUM	1	1						
	Z0018500	DRAINAGE STRUCTURES TO BE CLEANED	EACH	25		25					
X	Z0018940	DRILL EXISTING MANHOLE OR HANDHOLE	EACH	2						1	1
	Z0040530	PIPE UNDERDRAIN REMOVAL	FOOT	298	298						
	Z0048665	RAILROAD PROTECTIVE LIABILITY INSURANCE	L SUM	1	1						
X	A2002716	TREE, CARYA OVATA (SHAGBARK HICKORY), 2" CALIPER, BALLED AND BURLAPPED	EACH	4	4						
X	A2006716	TREE, QUERCUS MACROCARPA (BUR OAK), 2" CALIPER, BALLED AND BURLAPPED	EACH	3	3						
X	A2007208	TREE, QUERCUS X WAREI 'NADLER', (KINDRED SPIRIT HYBRID OAK), 2-1/2" CALIPER, BALLED AND BURLAPPED	EACH	4	4						
X	B2001466	TREE, CORNUS MAS (CORNELIAN CHERRY DOG WOOD), 6' HEIGHT, SHRUB FORM, BALLED AND BURLAPPED	EACH	12	12						
X	C2000139	SHRUB, AESCULUS PARVIFLORA (BOTTLEBRUSH BUCKEYE), CONTAINER GROWN, 5-GALLON	EACH	40	40						
X	E20150G5	VINE-HYDRANGEA ANOMALA SUBSP. PETIOLARIS (CLIMBING HYDRANGEA), 5-GALLONPOT	EACH	4	4						
X	E20200G1	VINE-PARTHENOCISSUS QUINQUEFOLIA (VIRGINIA CREEPER), 1-GALLONPOT	EACH	92	92						
X	K0013110	PERENNIAL PLANTS, WOODLAND TYPE, GALLONPOT	UNIT	3	3						

X = SPECIALTY ITEM

MODEL: Default
FILE NAME: \\nasuni-fil\Data\Projects\10-IL\14411-IDOT - Sacramento and Paulina over I-290\Work\QAQC\Sacramento\2025.10.16-Revised PSE Plans\Revised CAD Files\D162K65-sht-SOQ.dgn

HORNER SHIFRIN
WWW. HORNERSHIFRIN .COM

USER NAME = omartinez	DESIGNED -	REVISED -	
	DRAWN -	REVISED -	
PLOT SCALE = 2.0000 ' / in.	CHECKED -	REVISED -	
PLOT DATE = 10/17/2025	DATE -	REVISED -	

STATE OF ILLINOIS
DEPARTMENT OF TRANSPORTATION

SACRAMENTO BOULEVARD OVER FAI-290 (EISENHOWER EXPRESSWAY)
SUMMARY OF QUANTITIES

SCALE: NTS | SHEET 14 OF 20 SHEETS | STA. TO STA.

F.A.I. RTE.	SECTION	COUNTY	TOTAL SHEETS	SHEET NO.
290	2019-192-B-R	COOK	237	18

CONTRACT NO. 62K65
ILLINOIS FED. AID PROJECT

	CODE NO.	ITEM	UNIT	TOTAL QUANTITY	CONSTRUCTION CODE						
					90% FED 10% STATE	100% STATE	90% FED 10% STATE	90% FED 10% STATE	100% CDOT	100% CDOT	100% CDOT
					ROADWAY	SAFETY	BRIDGE	ROADWAY LIGHTING		TRAFFIC SIGNALS	
					0004	0005	0013	0021	0021	0021	0021
					URBAN	URBAN	SN 016-0754	IDOT	CDOT	CONGRESS	VAN BUREN
X	K0026610	TRANSPLANTED SALVAGED TREES	EACH	7	7						
X	K0026620	TRANSPLANTED SALVAGED SHRUBS	EACH	11	11						
X	K0026650	TRANSPLANTED SALVAGED PERENNIALS	EACH	10	10						
X	K0026850	PERENNIAL PLANT CARE	SQ YD	575	575						
X	K0029618	WEED CONTROL, BROADLEAF IN TURF	GALLON	3	3						
X	K0029632	WEED CONTROL, NON-SELECTIVE AND NON-RESIDUAL	GALLON	3	3						
X	K0036120	MULCH PLACEMENT 4"	SQ YD	500	500						
X	K1002564	INTERSEEDING (SPECIAL)	ACRE	0.30	0.30						
X	K1005863	TREE ROOT PRUNING	EACH	6	6						
	X0300062	GRAFFITI REMOVAL	SQ YD	72			72				
	X0320087	DEBRIS SCREEN	SQ YD	400	400						
X	X0322679	CONCRETE FOUNDATION FOR TYPE "SUPER P" BASE MOUNTED TRAFFIC SIGNAL CONTROLLER CABINET	EACH	2						1	1
X	X0322690	POLE STEEL, ANCHOR BASE, 10" DIAMETER, 3 GAUGE, 34'-6"	EACH	3						2	1
X	X0322691	POLE STEEL, ANCHOR BASE, 11" DIAMETER, 3 GAUGE, 34'-6"	EACH	1						1	

X = SPECIALTY ITEM

MODEL: Default
FILE NAME: \\nasuni-fil\Data\Projects\10-IL\14411-IDOT - Sacramento and Paulina over I-290\Work\QAQC\Sacramento\2025.10.16-Revised PSE Plans\Revised CAD Files\D162K65-sht-SOQ.dgn

HORNER SHIFRIN
WWW. HORNERSHIFRIN .COM

USER NAME = omartinez	DESIGNED -	REVISED -	
	DRAWN -	REVISED -	
PLOT SCALE = 2.0000 ' / in.	CHECKED -	REVISED -	
PLOT DATE = 10/17/2025	DATE -	REVISED -	

STATE OF ILLINOIS
DEPARTMENT OF TRANSPORTATION

SACRAMENTO BOULEVARD OVER FAI–290 (EISENHOWER EXPRESSWAY)
SUMMARY OF QUANTITIES

SCALE: NTS | SHEET 15 OF 20 SHEETS | STA. TO STA.

F.A.I. RTE.	SECTION	COUNTY	TOTAL SHEETS	SHEET NO.
290	2019-192-B-R	COOK	237	19
		CONTRACT NO. 62K65		
		ILLINOIS	FED. AID PROJECT	

	CODE NO.	ITEM	UNIT	TOTAL QUANTITY	CONSTRUCTION CODE						
					90% FED 10% STATE	100% STATE	90% FED 10% STATE	90% FED 10% STATE	100% CDOT	100% CDOT	100% CDOT
					ROADWAY	SAFETY	BRIDGE	ROADWAY LIGHTING		TRAFFIC SIGNALS	
					0004	0005	0013	0021	0021	0021	0021
					URBAN	URBAN	SN 016-0754	IDOT	CDOT	CONGRESS	VAN BUREN
*	X0322692	POLE STEEL, ANCHOR BASE, 12.5" DIAMETER, 3 GAUGE, 34'-6"	EACH	2							2
	X0323868	DRAINAGE RESTRICTOR	EACH	1	1						
	X0324198	REMOVAL OF ASBESTOS CEMENT CONDUIT	FOOT	1974			1974				
X	X0324478	CONDUIT IN TRENCH 3" PVC (SCHEDULE 40)	FOOT	1960						940	1020
X	X0324487	CONCRETE FOUNDATION, 30" DIAMETER, 1 1/4" ANCHOR RODS, 17-1/4" BOLT CIRCLE	EACH	2							2
X	X0324517	ELECTRICAL MANHOLE 3'X4'X4' WITH 30" FRAME AND LID	EACH	2						1	1
X	X0324519	CONCRETE FOUNDATION, 30" DIAMETER, 1 1/4" ANCHOR RODS, 17 1/4" BOLT CIRCLE, 9 FEET	EACH	1						1	
	X0325207	TELEVISION INSPECTION OF SEWER	FOOT	2438	2438						
X	X0325222	WEED CONTROL, BASAL TREATMENT	GALLON	5	5						
*	X0325839	SIGNAL TIMING	L SUM	1	1						
*	X0326326	CABLE IN CONDUIT, TRIPLEX, 2-1/C NO. 6 AND 1-1/C NO. 8 GROUND	FOOT	970					970		
	X0326801	COMBINED SEWERS TO BE CLEANED	FOOT	299		299					
X	X1400202	LUMINAIRE (SPECIAL)	EACH	6					6		
X	X1400382	ELECTRIC CABLE IN CONDUIT, SIGNAL, NO. 14 19/C	FOOT	1781						865	916

X = SPECIALTY ITEM

MODEL: Default
FILE NAME: \\nasuni-fil\Data\Projects\10-IL\14411-IDOT - Sacramento and Paulina over I-290\Work\QAQC\Sacramento\2025.10.16-Revised PSE Plans\Revised CAD Files\D162K65-sht-SQQ.dgn

HORNER SHIFRIN
WWW. HORNERSHIFRIN .COM

USER NAME = omartinez	DESIGNED -	REVISED -	
	DRAWN -	REVISED -	
PLOT SCALE = 2.0000 ' / in.	CHECKED -	REVISED -	
PLOT DATE = 10/17/2025	DATE -	REVISED -	

STATE OF ILLINOIS
DEPARTMENT OF TRANSPORTATION

SACRAMENTO BOULEVARD OVER FAI–290 (EISENHOWER EXPRESSWAY)
SUMMARY OF QUANTITIES

SCALE: NTS | SHEET 16 OF 20 SHEETS | STA. TO STA.

F.A.I. RTE.	SECTION	COUNTY	TOTAL SHEETS	SHEET NO.
290	2019-192-B-R	COOK	237	20
		CONTRACT NO. 62K65		
		ILLINOIS	FED. AID PROJECT	

REV-SEP

	CODE NO.	ITEM	UNIT	TOTAL QUANTITY	CONSTRUCTION CODE						
					90% FED 10% STATE	100% STATE	90% FED 10% STATE	90% FED 10% STATE	100% CDOT	100% CDOT	100% CDOT
					ROADWAY	SAFETY	BRIDGE	ROADWAY LIGHTING		TRAFFIC SIGNALS	
					0004	0005	0013	0021	0021	0021	0021
					URBAN	URBAN	SN 016-0754	IDOT	CDOT	CONGRESS	VAN BUREN
	X2080251	TRENCH AND BACKFILL WITH SCREENINGS	FOOT	2021						972	1049
	X2503110	MOWING (SPECIAL)	ACRE	2	2						
X	X2503315	INTERSEEDING, CLASS 4A (MODIFIED)	ACRE	0.70	0.70						
X	X2503321	INTERSEEDING, CLASS 5 (MODIFIED)	ACRE	0.50	0.50						
*	X2800500	INLET PROTECTION (SPECIAL)	EACH	1	1						
	X4022000	TEMPORARY ACCESS (COMMERCIAL ENTRANCE)	EACH	2	2						
	X4062952	HOT-MIX ASPHALT STABILIZATION 6" AT STEEL PLATE BEAM GUARD RAIL	SQ YD	125	125						
*	X4240800	DETECTABLE WARNINGS (SPECIAL)	SQ FT	166	166						
	X4420828	CLASS D PATCHES, TYPE III, 12 INCH (SPEC IAL)	SQ YD	19	19						
	X4421788	CLASS D PATCHES, TYPE I, 12 INCH (SPECIAL)	SQ YD	4	4						
*	X5080530	BAR TERMINATORS	EACH	1,136			1,136				
	X5504002	STORM SEWERS, DUCTILE IRON, TYPE 18"	FOOT	29	29						
	X5537600	STORM SEWERS TO BE CLEANED 8"	FOOT	89		89					
	X5537700	STORM SEWERS TO BE CLEANED 10"	FOOT	212		212					

X = SPECIALTY ITEM

MODEL: Default
FILE NAME: \\nasuni-fil\Data\Projects\10-IL\14411-IDOT - Sacramento and Paulina over I-290\Work\QAQC\Sacramento\2025.10.16-Revised PSE Plans\Revised CAD Files\D162K65-sht-SQQ.dgn

HORNER SHIFRIN
WWW. HORNERSHIFRIN .COM

USER NAME = omartinez	DESIGNED -	REVISED -	
	DRAWN -	REVISED -	
PLOT SCALE = 2.0000 ' / in.	CHECKED -	REVISED -	
PLOT DATE = 10/17/2025	DATE -	REVISED -	

STATE OF ILLINOIS
DEPARTMENT OF TRANSPORTATION

SACRAMENTO BOULEVARD OVER FAI-290 (EISENHOWER EXPRESSWAY)
SUMMARY OF QUANTITIES

SCALE: NTS | SHEET 17 OF 20 SHEETS | STA. TO STA.

F.A.I. RTE.	SECTION	COUNTY	TOTAL SHEETS	SHEET NO.
290	2019-192-B-R	COOK	237	21
		CONTRACT NO. 62K65		
		ILLINOIS	FED. AID PROJECT	

REV-SEP

				CONSTRUCTION CODE						
				90% FED 10% STATE	100% STATE	90% FED 10% STATE	90% FED 10% STATE	100% CDOT	100% CDOT	100% CDOT
				ROADWAY	SAFETY	BRIDGE	ROADWAY LIGHTING		TRAFFIC SIGNALS	
CODE NO.	ITEM	UNIT	TOTAL QUANTITY	0004 URBAN	0005 URBAN	0013 SN 016-0754	0021 IDOT	0021 CDOT	0021 CONGRESS	0021 VAN BUREN
X5537800	STORM SEWERS TO BE CLEANED 12"	FOOT	304		304					
X5537900	STORM SEWERS TO BE CLEANED 15"	FOOT	316		316					
X6022505	CATCH BASINS, TYPE A, 4'-DIAMETER, TYPE 1 FRAME, OPEN LID	EACH	10	10						
X6030310	FRAMES AND LIDS TO BE ADJUSTED (SPECIAL)	EACH	7	7						
X6060045	COMBINATION CONCRETE CURB AND GUTTER, TYPE B V-.12	FOOT	824.5	824.5						
X6370048	CONCRETE BARRIER BASE (SPECIAL)	FOOT	421	421						
X6420100	SHOULDER RUMBLE STRIP REMOVAL	SQ YD	943	943						
X6640300	CHAIN LINK FENCE REMOVAL	FOOT	435	435						
X6700410	ENGINEER'S FIELD OFFICE, TYPE A (SPECIAL)	CAL MO	18	18						
X7010216	TRAFFIC CONTROL AND PROTECTION, (SPECIAL)	L SUM	1	1						
X7011015	TRAFFIC CONTROL AND PROTECTION (EXPRESSWAYS)	L SUM	1	1						
X7013820	TRAFFIC CONTROL SURVEILLANCE, EXPRESSWAYS	CAL DA	240	240						
X7200061	TEMPORARY INFORMATION SIGNING	SQ FT	179	179						
* X7200072	STREET NAME SIGNS	EACH	6						3	3

X = SPECIALTY ITEM

MODEL: Default
FILE NAME: \\rgsdvfs1#0\data\Projects\162k\14411-IDOT - Sacramento and Paulina over I-290\Work\QAQC\Sacramento\2025_10_16-Revised PSE Plans\Revised CAD Files\D162k65-smt-SQQ.dgn

HORNER SHIFRIN
WWW. HORNERSHIFRIN .COM

USER NAME = amartinez	DESIGNED -	REVISED -
	DRAWN -	REVISED -
PLOT SCALE = 2.0000 ' / in.	CHECKED -	REVISED -
PLOT DATE = 10/17/2025	DATE -	REVISED -

STATE OF ILLINOIS
DEPARTMENT OF TRANSPORTATION

SACRAMENTO BOULEVARD OVER FAI–290 (EISENHOWER EXPRESSWAY)
SUMMARY OF QUANTITIES

SCALE: NTS | SHEET 18 OF 20 SHEETS | STA. | TO STA.

F.A.I. RTE.	SECTION	COUNTY	TOTAL SHEETS	SHEET NO.
290	2019-192-B-R	COOK	237	22
		CONTRACT NO. 62K65		
	ILLINOIS FED. AID PROJECT			

REV-SEP

					CONSTRUCTION CODE						
					90% FED 10% STATE	100% STATE	90% FED 10% STATE	90% FED 10% STATE	100% CDOT	100% CDOT	100% CDOT
					ROADWAY	SAFETY	BRIDGE	ROADWAY LIGHTING		TRAFFIC SIGNALS	
	CODE NO.	ITEM	UNIT	TOTAL QUANTITY	0004 URBAN	0005 URBAN	0013 SN 016-0754	0021 IDOT	0021 CDOT	0021 CONGRESS	0021 VAN BUREN
*	X7290002	INSTALL ROUND STEEL SIGN SUPPORT	FOOT	99	99						
	X7830050	RAISED REFLECTIVE PAVEMENT MARKER, REFLECTOR REMOVAL	EACH	252	252						
*	X7830052	RAISED REFLECTIVE PAVEMENT MARKER, REFLECTOR REPLACEMENT	EACH	252	252						
X	X8000003	MAINTENANCE OF LIGHTING SYSTEM	CAL MO	12				12			
X	X8100863	INTERCEPT EXISTING CONDUIT	EACH	1							1
X	X8130108	JUNCTION BOX, POLE OR POST MOUNTED	EACH	8						4	4
X	X8250500	LIGHTING UNITCOMPLETE (SPECIAL)	EACH	4					4		
X	X8362247	CONCRETE FOUNDATION, 24" DIAMETER, 1 1/4" ANCHOR RODS, 15" BOLT CIRCLE, 7 FEET	FOOT	2						1	1
X	X8362249	CONCRETE FOUNDATION, 24" DIAMETER, 1 1/4" ANCHOR RODS, 15" BOLT CIRCLE, 9 FEET	FOOT	3						2	1
X	X8400104	MAINTENANCE OF STREET LIGHTING SYSTEM	L SUM	1					1		
X	X8570304	ADVANCED TRANSPORTATION CONTROLLER, 16 LOAD BAY, "SUPER P" CABINET UPS	EACH	2						1	1
X	X8710024	FIBER OPTIC CABLE IN CONDUIT, NO. 62.5/125, MM12F, SM12F	FOOT	650						650	
X	X8760200	ACCESSIBLE PEDESTRIAN SIGNALS	EACH	12						6	6
X	X8774126	MAST ARM, STEEL, MONOTUBE, 26 FOOT	EACH	1						1	

X = SPECIALTY ITEM

MODEL: Default
FILE NAME: \\cdot\nfil\Data\Projects\1621\14411-HDOT - Sacramento and Paulina over I-290\Work\QAQC\Sacramento\2025_10_16-Revised PSE Plans\Revised CAD Files\D162K65-qnt-SOQ.dgn

HORNER SHIFRIN
WWW. HORNERSHIFRIN .COM

USER NAME = amartinez	DESIGNED -	REVISED -
	DRAWN -	REVISED -
PLOT SCALE = 2.0000 ' / in.	CHECKED -	REVISED -
PLOT DATE = 10/17/2025	DATE -	REVISED -

STATE OF ILLINOIS
DEPARTMENT OF TRANSPORTATION

SACRAMENTO BOULEVARD OVER FAI–290 (EISENHOWER EXPRESSWAY)
SUMMARY OF QUANTITIES

SCALE: NTS | SHEET 19 OF 20 SHEETS | STA. | TO STA.

F.A.I. RTE.	SECTION	COUNTY	TOTAL SHEETS	SHEET NO.
290	2019-192-B-R	COOK	237	23
		CONTRACT NO. 62K65		
	ILLINOIS FED. AID PROJECT			

REV-SEP

	CODE NO.	ITEM	UNIT	TOTAL QUANTITY	CONSTRUCTION CODE: 90% FED 10% STATE ROADWAY 0004 URBAN	100% STATE SAFETY 0005 URBAN	90% FED 10% STATE BRIDGE 0013 SN 016-0754	90% FED 10% STATE ROADWAY LIGHTING 0021 IDOT	100% CDOT ROADWAY LIGHTING 0021 CDOT	100% CDOT TRAFFIC SIGNALS 0021 CONGRESS	100% CDOT TRAFFIC SIGNALS 0021 VAN BUREN
X	X8774130	MAST ARM, STEEL, MONOTUBE, 30 FOOT	EACH	1						1	
X	X8774135	MAST ARM, STEEL, MONOTUBE, 35 FOOT	EACH	2							2
X	X8774120	MAST ARM, STEEL, MONOTUBE, 20 FOOT	EACH	2						1	1
X	X8780012	CONCRETE FOUNDATION, TYPE A, 12-INCH DIAMETER	FOOT	24						12	12
X	D2003776	EVERGREEN, THUJA OCCIDENTALIS SMARAGD (EMERALD GREEN AMERICAN ARBORVITAE), 5' HEIGHT, BALLED AND BURLAPPED	EACH	5	5						
*	X8140105	HANDHOLE (SPECIAL)	EACH	7						3	4
*	X6022301	MANHOLES TYPE A, 3' DIA., TYPE 1 FRAME, OPEN LID	EACH	4	4						
*	X6025600	MANHOLES TO BE ADJUSTED (SPECIAL)	EACH	2	2						
X	X0328540	PLATE, WELD TO POLE 2-BOLT	EACH	6						3	3
X	X8308120	POLE STEEL, ANCHOR BASE, 10" DIAMETER, 7 GAUGE, 34'-6"	EACH	2						1	1
*	X8891503	REMOVE AND REINSTALL VIDEO DETECTION CAMERA	EACH	1							1
*	C2C11748	SHRUB, VIBURNUN DENTATUM CHRISTOM (BLUE MUFFIN ARROWWOOD VIBURNUM), 36" HEIGHT, BALLED AND BURLAPPED	EACH	3	3						
Ø	Z0076600	TRAINEES	HOUR	1000	1000						
Ø	Z0076604	TRAINEES - TRAINING PROGRAM GRADUATE	HOUR	1000	1000						

X = SPECIALTY ITEM

Ø 0042

MODEL: Default
FILE NAME: \\nasuni-fil\Data\Projects\10-I\14411-IDOT - Sacramento and Paulina over I-290\Work\QAQC\Sacramento\2025.10.16-Revised PSE Plans\Revised CAD Files\D162K65-sht-SQQ.dgn

HORNER SHIFRIN
WWW. HORNERSHIFRIN .COM

USER NAME = omartinez	DESIGNED -	REVISED -	
	DRAWN -	REVISED -	
PLOT SCALE = 2.0000 ' / in.	CHECKED -	REVISED -	
PLOT DATE = 10/17/2025	DATE -	REVISED -	

STATE OF ILLINOIS
DEPARTMENT OF TRANSPORTATION

SACRAMENTO BOULEVARD OVER FAI-290 (EISENHOWER EXPRESSWAY)
SUMMARY OF QUANTITIES

SCALE: NTS | SHEET 20 OF 20 SHEETS | STA. TO STA.

F.A.I. RTE.	SECTION	COUNTY	TOTAL SHEETS	SHEET NO.
290	2019-192-B-R	COOK	237	24
		CONTRACT NO. 62K65		
		ILLINOIS FED. AID PROJECT		

REMOVALS: SACRAMENTO BLVD

LOCATION		HOT-MIX ASPHALT SURFACE REMOVAL BUTT JOINT	PAVEMENT REMOVAL (SEE NOTE)	HOT-MIX ASPHALT SURFACE REMOVAL, 2"	DRIVEWAY PAVEMENT REMOVAL	COMBINATION CURB AND GUTTER REMOVAL (SEE NOTE)	SIDEWALK REMOVAL	APPROACH SLAB REMOVAL	CHAIN LINK FENCE REMOVAL	REMARKS
STATION	STATION	SQ YD	SQ YD	SQ YD	SQ YD	FOOT	SQ FT	SQ YD	FOOT	
SACRAMENTO BOULEVARD										
04+10.75	04+15.25	24.0								SACRAMENTO SOUTH RESURFACING LIMIT
04+15.25	05+42.19			903.6						SACRAMENTO SOUTH RESURFACING LIMIT
04+44.89	05+10.83					71.9	395.9			CONGRESS SW CORNER
04+92.48	05+14.01						314.4			CONGRESS SE CORNER
04+92.74	05+16.52					81.3				CONGRESS SE CORNER
05+42.19	06+63.66		802.7							SACRAMENTO SOUTH RECONSTRUCTION
05+44.20	07+15.58					218.4	1342.7			NE CORNER OF CONGRESS INTERSECTION TO EXISTING BRIDGE
05+49.16	07+07.24					172.0				NW CORNER OF CONGRESS INTERSECTION TO EXISTING BRIDGE
05+49.34	07+06.01						1082.3			NW CORNER OF CONGRESS INTERSECTION TO EXISTING BRIDGE
05+50.44	06+69.18								129.5	EAST SIDE OF SACRAMENTO
05+68.19	06+57.17								88.5	WEST SIDE OF SACRAMENTO
06+63.66	07+11.40							279.2		SACRAMENTO SOUTH RECONSTRUCTION
09+21.18	09+69.06							282.4		SACRAMENTO NORTH RECONSTRUCTION
09+15.52	10+85.03						1822.2			SW CORNER OF VAN BUREN INTERSECTION TO EXISTING BRIDGE
09+16.77	10+85.44					185.0				SW CORNER OF VAN BUREN INTERSECTION TO EXISTING BRIDGE
09+25.22	10+85.10					176.9				SE CORNER OF VAN BUREN INTERSECTION TO EXISTING BRIDGE
09+25.22	10+83.65						1468.1			SE CORNER OF VAN BUREN INTERSECTION TO EXISTING BRIDGE
09+63.30	10+75.63								112.6	VAN BUREN SW CORNER
09+69.06	10+85.26		781.1							SACRAMENTO NORTH RECONSTRUCTION
09+78.06	10+77.49								104.3	VAN BUREN SE CORNER
10+59.93	10+83.55		16.7							VAN BUREN SE HMA SURFACE REMOVAL
10+85.26	11+46.60			536.0						SACRAMENTO NORTH RESURFACING
11+21.67	11+40.48					35.1	251.5			VAN BUREN NE CORNER
11+25.59	11+47.14					68.2	242.5			VAN BUREN NW CORNER
11+46.60	11+51.10	30.3								SACRAMENTO NORTH RESURFACING LIMIT
CONGRESS PARKWAY										
253+20.81	253+25.31	16.5								CONGRESS WEST LEG
254+22.36	254+42.25				30.6					CONGRESS SE CORNER - HARRISON COURTS
254+42.25	254+59.87						109.6			EAST OF HARRISON COURTS DRIVEWAY
			5.5							
254+46.77	254+51.27	14.1								CONGRESS EAST LEG
VAN BUREN STREET										
112+45.23	112+75.85				41.2					VAN BUREN NW CORNER
112+68.07	112+99.51		6.4							VAN BUREN NW CORNER
112+87.65	112+92.15	20.8								VAN BUREN WEST LEG
113+79.75	113+84.25	18.3								VAN BUREN EAST LEG
SCHEDULE TOTAL		124.0	1612.4	1439.6	71.8	1008.8	7029.2	561.6	434.9	
SCHEDULE PAY		124	1613	1440	72	1009	7030	562	435	

REMOVALS: I-290

LOCATION		PAVEMENT REMOVAL (SEE NOTE)	COMBINATION CURB AND GUTTER REMOVAL (SEE NOTE)	CONCRETE BARRIER REMOVAL	PAVED SHOULDER REMOVAL
STATION	STATION	SQ YD	FOOT	FOOT	SQ YD
I-290 EB					
1061+68.06	1063+39.51		171.4		
1063+26.44	1064+22.43			95.8	
1063+39.51	1064+22.71	34.3			
1064+16.13	1065+14.75				121.9
1064+22.71	1065+14.75		92.5		
I-290 WB					
1064+20.32	1065+07.69		87.4		
1064+20.32	1065+18.37				111.1
1065+07.69	1066+70.70	97.4			
1065+08.08	1066+87.77			180.6	
1066+70.70	1067+67.34		97.0		
SCHEDULE TOTAL		131.7	448.3	276.4	233.0
SCHEDULE PAY		132	449	277	233

(NOTE) PAY ITEM UTILIZED IN ANOTHER SCHEDULE.

PATCHING

LOCATION			HOT-MIX ASPHALT REPLACEMENT OVER PATCHES	HOT-MIX ASPHALT REMOVAL OVER PATCHES, 2"	CLASS D PATCHES, TYPE II, 10 INCH	CLASS D PATCHES, TYPE III, 10 INCH	CLASS D PATCHES, TYPE IV, 10 INCH	CLASS D PATCHES, TYPE III, 12 INCH (SPECIAL)	CLASS D PATCHES, TYPE I, 12 INCH (SPECIAL)	REMARKS
STATION	STATION	SIDE	TON	SQ YD	SQ YD	SQ YD	SQ YD	SQ YD	SQ YD	
SACRAMENTO BOULEVARD										
04+10.75	05+21.12	RT	4.7	82.5			74.7			SE CORNER CURB REPLACEMENT
04+45.16	05+16.78	LT	9.2	41.9			46.1			SW CORNER CURB REPLACEMENT
05+15.87	05+37.24	RT	1.3	11.9	9.7					TS CONDUIT
10+85.11	11+21.88	RT	2.3	20.4		16.4				TS CONDUIT
10+85.35	11+23.08	LT	2.3	21.0		16.8				TS CONDUIT
11+17.78	11+40.48	RT	2.7	24.4			24.9			NE CORNER CURB REPLACEMENT
11+18.77	11+47.14	LT	2.2	19.6			20.3			NW CORNER CURB REPLACEMENT
CONGRESS PARKWAY										
253+39.04	254+04.26	RT	4.1	36.2			26.1			TS CONDUIT
253+41.01	253+97.95	LT	3.5	31.6		20.6				TS CONDUIT
253+97.25	254+51.23	LT	3.1	27.6			25.0			NW CORNER CURB REPLACEMENT
254+51.35	254+60.58	RT							4.0	CURB REPLACEMENT
VAN BUREN STREET										
112+45.27	112+87.60	LT						18.8		CURB REPLACEMENT
112+98.84	113+64.02	LT	4.1	36.8			28.5			TS CONDUIT
CONTINGENCY										
			22.3	198.9	59.6	99.6				SACRAMENTO, CONGRESS AND VANBUREN
SCHEDULE TOTAL			61.9	552.8	69.3	153.4	245.6	18.8	4.0	
SCHEDULE PAY			62	553	70	154	246	19	4	

PAVEMENT MARKING REMOVAL - WATER BLASTING

LOCATION			REMARKS	WIDTH	LENGTH OR AREA		QUANTITY
STATION	STATION	SIDE			QUANTITY	UNIT	SQ FT
SACRAMENTO BOULEVARD							
03+50.15		LT	SB STOP BAR - WHITE	24"	29.0	FT	58.0
03+50.63	04+05.65	LT	SB LEFT TURN LANE - WHITE	6"	55.0	FT	27.5
	04+10.74	RT	FLUSH MEDIAN - DOUBLE YELLOW	4"	64.7	FT	43.1
		LT	SB SKIP DASH - WHITE	4"	62.4	FT	5.2
03+56.30	04+10.74	RT	NB SKIP DASH - WHITE	4"	55.4	FT	4.6
03+64.85		CENTER	SB LEFT TURN LANE - LEFT ARROW SYMBOL	L&S	8.8	SQ FT	8.8
03+90.03		CENTER	SB LEFT TURN LANE - "ONLY"	L&S	11.8	SQ FT	11.8
11+51.10	13+51.89	CENTER	FLUSH MEDIAN - DOUBLE YELLOW	4"	463.0	FT	308.7
		CENTER	FLUSH MEDIAN - DIAGONALS YELLOW	12"	66.6	FT	66.6
CONGRESS PARKWAY							
251+32.34		LT & RT	EB LANES - WRONG WAY SYMBOL (2 TOTAL)	L&S	24.3	FT	48.6
251+77.90	253+20.81	LT	EB LEFT TURN LANE - WHITE	6"	142.6	FT	71.3
		RT	EB RIGHT TURN LANE - WHITE	6"	142.6	FT	71.3
252+73.30		LT & RT	EB TURN LANES - "ONLY" (2 TOTAL)	L&S	11.8	SQ FT	23.6
253+00.77		LT & RT	EB TURN LANES - LEFT / RIGHT ARROW SYMBOL	L&S	8.8	SQ FT	17.6
		CENTER	EB LANE - THREE ARROW SYMBOL	L&S	20.9	SQ FT	20.9
I-290							
			MAINTENANCE OF TRAFFIC				9227.0
SCHEDULE TOTAL							10005.0
SCHEDULE PAY							10005

PAVEMENT: SACRAMENTO BLVD AND I-290

LOCATION		REMARKS	GEOTECHNICAL FABRIC FOR GROUND STABILIZATION	AGGREGATE SUBGRADE IMPROVEMENT	AGGREGATE SUBGRADE IMPROVEMENT 12"	SUBBASE GRANULAR MATERIAL, TYPE B 4" (SEE NOTE)	PORTLAND CEMENT CONCRETE BASE COURSE 10"	HOT-MIX ASPHALT BASE COURSE, 8"	BITUMINOUS MATERIAL (PRIME COAT)	BITUMINOUS MATERIAL (TACK COAT)	LONGITUDINAL JOINT SEALANT	MIXTURE FOR CRACKS, JOINTS, AND FLANGEWAYS	HOT-MIX ASPHALT BINDER COURSE, IL-19.0, N70	HOT-MIX ASPHALT SURFACE COURSE, IL-9.5, MIX "D", N70	POLYMERIZED HOT-MIX ASPHALT SURFACE COURSE, IL-9.5, MIX "E", N70	WELDED WIRE REINFORCEMENT	PAVEMENT CONNECTOR (PCC) FOR BRIDGE APPROACH SLAB
STATION	STATION		SQ YD	CU YD	SQ YD	SQ YD	SQ YD	SQ YD	POUND	POUND	FOOT	TON	TON	TON	TON	SQ YD	SQ YD
SACRAMENTO BOULEVARD																	
04+10.75	05+42.19	RESURFACING (SOUTH)								425.8	525.7	0.3			90.5		
05+42.19	06+44.67	RECON (SOUTH)	598.7		598.7			535.8	1347.2	361.0	363.9				60.0		
		RECON (SOUTH): BACK OF CURB, LEFT SIDE		3.3													
		RECON (SOUTH): BACK OF CURB, RIGHT SIDE		3.8													
06+44.67	06+63.47	PCC PAVEMENT CONNECTOR (SOUTH)	89.7		89.7	80.6			403.6							96.1	96.1
09+70.24	09+89.05	PCC PAVEMENT CONNECTOR (NORTH)	89.5		89.5	80.6			403.0							96.2	96.2
09+89.05	10+85.26	RECON (NORTH)	576.9		576.9			520.2	1298.0	351.1	345.1				58.3		
		RECON (NORTH): BACK OF CURB, LEFT SIDE		3.2													
		RECON (NORTH): BACK OF CURB, RIGHT SIDE		3.0													
10+85.26	11+51.10	RESURFACING (NORTH)								271.6	263.4	0.2			67.6		
CONTINGENCY		FOR POTENTIAL UNDERCUTS (12 INCHES ASSUMED): NORTH RECON AREA: 100% NORTH AND SOUTH RECON AREA: ADDITIONAL 25%	338.7	343.7													
BRIDGE																	
		SEE STRUCTURAL PLANS		250.0													
I-290																	
1061+68.10	1065+14.75	EB I-290 IMPROVEMENTS			511.0		121.9			109.8			23.9	10.2			
1064+20.32	1067+67.80	WB I-290 IMPROVEMENTS			465.4		111.9			100.4			21.9	9.4			
SCHEDULE TOTAL			1693.5	606.9	2331.2	161.2	233.8	1056.0	3451.8	1619.7	1498.0	0.5	45.8	19.6	276.4	192.3	192.3
SCHEDULE PAY			1694	607	2332	162	234	1056	3452	1620	1499	0.5	46	20	277	193	193

(NOTE) PAY ITEM UTILIZED IN ANOTHER SCHEDULE.

SIDEWALKS

LOCATION			PORTLAND CEMENT CONCRETE SIDEWALK		SUBBASE GRANULAR MATERIAL, TYPE B 4" (SEE NOTE)	DETECTABLE WARNINGS (SPECIAL)	REMARKS
			5 INCH	8 INCH			
STATION	STATION	SIDE	SQ FT	SQ FT	SQ YD	SQ FT	
CONGRESS PARKWAY							
253+25.76	253+38.57	LT	1097.9		122.0		NW CONGRESS - NORTH OF 8 INCH SIDEWALK TO PROPOSED BRIDGE
253+28.52	253+38.57	LT		161.0	17.9	12.0	NW CORNER OF CONGRESS
253+38.75	253+48.22	RT		108.1	12.0	26.5	SW CORNER OF CONGRESS
253+41.32	253+55.74	LT	335.0		37.2		SW CONGRESS - SOUTH OF 8 INCH SIDEWALK
253+99.94	254+20.58	RT		301.7	33.5	33.6	SE CORNER OF CONGRESS
253+99.47	254+15.79	LT		164.9	18.3	12.0	NE CORNER OF CONGRESS
253+99.67	254+12.56	RT	1327.5		147.5		NE CONGRESS - NORTH OF 8 INCH SIDEWALK TO PROPOSED BRIDGE
254+12.10	254+51.20	LT	374.2		41.6		NE CONGRESS - EAST OF 8 INCH SIDEWALK
254+43.74	254+60.36	RT	137.9		15.3		SE OF HARRISON COURTS DRIVEWAY
VAN BUREN STREET							
112+78.25	112+99.40	LT		282.7	31.4	25.5	NW CORNER OF VAN BUREN
112+87.74	113+09.98	RT		272.3	30.3	12.0	SW CORNER OF VAN BUREN
112+91.02	113+10.03	LT	1537.5		170.8		SW VAN BUREN - SOUTH OF 8 INCH SIDEWALK TO PROPOSED BRIDGE
113+62.15	113+77.09	RT		220.6	24.5	12.0	SE CORNER OF VAN BUREN
113+62.16	113+75.90	RT	1204.1		133.8		SE VAN BUREN - SOUTH OF 8 INCH SIDEWALK TO PROPOSED BRIDGE
113+63.87	113+83.78	LT		250.5	27.8	31.5	NE CORNER OF VAN BUREN
SCHEDULE TOTAL			6014.1	1761.8	864.0	165.1	
SCHEDULE PAY			6015	1762	864	166	

(NOTE) PAY ITEM UTILIZED IN ANOTHER SCHEDULE.

ROADSIDE IMPROVEMENTS: I-290

LOCATION		COMBINATION CONCRETE CURB AND GUTTER, TYPE B-6.24	TRAFFIC BARRIER TERMINAL, TYPE 6	TRAFFIC BARRIER TERMINAL, TYPE 1 (SPECIAL) TANGENT	CONCRETE BARRIER, DOUBLE FACE, 44 INCH HEIGHT	HOT-MIX ASPHALT STABILIZATION 6" AT STEEL PLATE BEAM GUARD RAIL	CONCRETE BARRIER BASE (SPECIAL)
STATION	STATION	FOOT	EACH	EACH	FOOT	SQ YD	FOOT
I-290 WESTBOUND							
1064+20.32	1066+30.90				210.9		210.9
1064+20.32	1067+67.80	347.9					
1066+30.90	1067+67.80		1.0				
1066+30.90	1067+57.80					62.2	
1066+67.80	1067+17.80			1.0			
I-290 EASTBOUND							
1061+68.10	1065+14.75	346.2					
1061+78.10	1063+05.00					62.2	
1062+18.10	1062+68.10			1.0			
1062+68.10	1063+05.00		1.0				
1063+05.00	1065+14.75				209.2		209.2
SCHEDULE TOTAL		694.1	2.0	2.0	420.1	124.4	420.1
SCHEDULE PAY		695	2	2	421	125	421

DRIVEWAYS

LOCATION		PORTLAND CEMENT DRIVEWAY PAVEMENT, 8 INCH	SUBBASE GRANULAR MATERIAL, TYPE B 4" (SEE NOTE)
STATION	STATION	SQ YD	SQ YD
CONGRESS PARKWAY			
254+22.09	254+42.07	31.1	31.1
VAN BUREN STREET			
112+45.22	112+76.77	42.2	42.2
SCHEDULE TOTAL		73.3	73.3
SCHEDULE PAY		74	74

(NOTE) PAY ITEM UTILIZED IN ANOTHER SCHEDULE.

PROTECTIVE COAT

PAY ITEM DESCRIPTION	QUANTITY (SQ YD)
PAVEMENT CONNECTOR (PCC) FOR BRIDGE APPROACH SLAB	193.0
PORTLAND CEMENT CONCRETE DRIVEWAY PAVEMENT, 8 INCH	74.0
PORTLAND CEMENT CONCRETE SIDEWALK 5 INCH	668.3
PORTLAND CEMENT CONCRETE SIDEWALK 8 INCH	195.8
COMBINATION CONCRETE CURB AND GUTTER, TYPE B-6.24	231.7
CONCRETE MEDIAN SURFACE, 6 INCH	215.2
CONCRETE BARRIER, DOUBLE FACED, 44 INCH HEIGHT	417.3
COMBINATION CONCRETE CURB AND GUTTER, TYPE B V-.12 (CDOT)	183.2
SCHEDULE TOTAL	2178.5
SCHEDULE PAY	2179

CONCRETE MEDIAN

LOCATION			CONCRETE MEDIAN SURFACE, 6 INCH	REMARKS
STATION	STATION	SIDE	SQ FT	
CONGRESS PARKWAY				
253+34.23	253+39.40	LT	63.8	NW CORNER OF CONGRESS
253+99.47	254+05.69	RT	48.8	NE CORNER OF CONGRESS
VAN BUREN STREET				
113+02.05	113+09.96	LT	98.4	SW CORNER OF VAN BUREN
113+62.12	113+66.24	RT	29.7	SE CORNER OF VAN BUREN
I-290				
1064+13.25	1065+14.75	RT	698.3	EB I-290 IMPROVEMENTS
1064+20.32	1065+18.33	LT	931.1	WB I-290 IMPROVEMENTS
SCHEDULE TOTAL			1870.1	
SCHEDULE PAY			1871	

MODEL: Default
FILE NAME: pw:\\PW01.hornershifrin.com:HS IDOT\Documents\2305600\0-PTB195-007 D1 Pv.Ja5sc Phil Siu.Collins\CAD Sheets\D162K65_Sacramento\D162K65_Sacramento\D162K65-sht-schedule-03.dgn

HORNER SHIFRIN
WWW.HORNERSHIFRIN.COM

USER NAME = krkubalanza	DESIGNED -	REVISED -
	DRAWN -	REVISED -
PLOT SCALE = 10.0000 ' / in.	CHECKED -	REVISED -
PLOT DATE = 10/28/2025	DATE -	REVISED -

STATE OF ILLINOIS
DEPARTMENT OF TRANSPORTATION

SACRAMENTO BOULEVARD OVER FAI–290 (EISENHOWER EXPRESSWAY)
SCHEDULE OF QUANTITIES

SCALE: NTS | SHEET 2 OF 5 SHEETS | STA. | TO STA.

F.A.I. RTE.	SECTION	COUNTY	TOTAL SHEETS	SHEET NO.
290	2019-192-B-R	COOK	237	26
		CONTRACT NO. 62K65		
		ILLINOIS	FED. AID PROJECT	

CONCRETE CURB

LOCATION			COMBINATION CONCRETE CURB AND GUTTER, TYPE B V-.12 (CDOT)	REMARKS
STATION	STATION	SIDE	FOOT	
SACRAMENTO BOULEVARD				
04+45.00	05+12.65	LT	72.2	SW CORNER OF CONGRESS
04+92.77	05+15.16	RT	51.5	SE CORNER OF CONGRESS
05+45.14	06+67.44	RT	176.7	NE CORNER OF CONGRESS
05+49.05	06+59.50	LT	126.9	NW CORNER OF CONGRESS
09+66.27	10+84.32	LT	137.1	SW CORNER OF VAN BUREN
09+74.21	10+84.10	RT	126.8	SE CORNER OF VAN BUREN
11+22.78	11+51.10	RT	33.7	NE CORNER OF VAN BUREN
11+23.70	11+51.10	LT	69.1	NW CORNER OF VAN BUREN
CONGRESS PARKWAY				
254+43.07	254+60.41	LT	30.2	SE CORNER AFTER DRIVEWAY

SCHEDULE TOTAL 824.2

SCHEDULE PAY 824.5

EARTHWORK

LOCATION	EARTH EXCAVATION	AVERAGE SHRINKAGE FACTOR	EARTH EXCAVATION (ADJUSTED)	EMBANKMENT	EARTHWORK BALANCE	
					EXCAVATION REQUIRED TO COMPLETE	EXCESS EXCAVATION
	CU YD	%	CU YD	CU YD	CU YD	CU YD
SACRAMENTO SOUTH RECON	182.6	15.0	155.2	32.7	0.0	122.5
SACRAMENTO NORTH RECON	155.8	15.0	132.4	38.9	0.0	93.5
INTERSTATE 290 EB	2903.0	15.0	2467.5	4.3	0.0	2463.2
INTERSTATE 290 WB	1126.7	15.0	957.7	5.1	0.0	952.6

SCHEDULE TOTAL 4368.1

SCHEDULE PAY 4370

NOTES:

A CONTINGENCY OF 25% HAS BEEN PROVIDED FOR THE RECONSRUCTION AREA ALONG WITH AGGREGATE SUBGRADE IMPROVEMENT (CU YD) FOR ANY POTENTIAL UNSUITABLE SOIL THE CONTRACTOR MAY ENCOUNTER DURING CONSTRUCTION.

EXCAVATED SOILS SHALL BE MANAGED IN ACCORDANCE WITH ARTICLE 669.05(a)(5) OF THE STANDARD SPECIFICATIONS AND CANNOT BE REUSED ON SITE. SEE THE REMOVAL AND DISPOSAL OF REGULATED SUBSTANCES (PROJECT SPECIFIC) SPECIAL PROVISION.

FENCE

LOCATION					CHAIN LINK FENCE, 6'
STATION	OFFSET (FT)	STATION	OFFSET (FT)	SIDE	FOOT
SACRAMENTO BOULEVARD					
05+50.44	56.60	06+69.22	34.75	RT	129.6
05+68.19	34.43	06+57.72	34.75	LT	89.8
09+64.49	34.75	10+75.62	47.54	LT	112.2
09+75.99	34.75	10+77.49	52.15	RT	106.7

SCHEDULE TOTAL 438.3

SCHEDULE PAY 439

MODEL: Default
FILE NAME: pw:\\PW01.hornershifrin.com:HS IDOT Documents\2305660000-PTB 195-007 - D1 Pkg\Sac - Pkg\Sac Civil\Civil\CAD Sheets\D162K65_SacramentoD162K65-cht-schedule-03.dgn

PAVEMENT MARKING																	
LOCATION			THERMOPLASTIC PAVEMENT MARKING -								PREFORMED THERMOPLASTIC PAVEMENT MARKING - LETTERS AND SYMBOLS	MODIFIED URETHANE PAVEMENT MARKING -			PREFORMED PLASTIC PAVEMENT MARKING, TYPE D -	GROOVING FOR RECESSED PAVEMENT MARKING	REMARKS
			LETTERS & SYMBOLS	LINE								LETTERS & SYMBOLS	LINE				
				4 INCH		6 INCH	8 INCH	12 INCH		24 INCH			4 INCH	6 INCH	7 INCH	8 INCH	
				WHITE	YELLOW	WHITE	WHITE	WHITE	YELLOW	WHITE			YELLOW	WHITE	WHITE		
STATION	STATION	SIDE	SQ FT	FOOT	FOOT	FOOT	FOOT	FOOT	FOOT	FOOT	SQ FT	SQ FT	FOOT	FOOT	FOOT	FOOT	
SACRAMENTO BOULEVARD																	
03+47.22	04+95.90				485.7												DOUBLE YELLOW CENTERLINE
03+49.17	03+51.17	LT								29.0							SB LANE: SOLID WHITE STOP BAR
03+50.03	04+10.72	LT		15.2		60.7											SB LANES: SOLID WHITE & WHITE SKIP DASH
03+50.03	04+93.47	RT		35.9													NB LANES: WHITE SKIP DASH
03+67.17		LT	8.8														SB TURN LANE: LEFT ARROW
03+83.15		LT	11.8														SB TURN LANE: "ONLY"
04+10.72	04+75.77	LT				16.3											SB TURN LANE: WHITE DOTTED
04+10.72	04+95.90								46.2								YELLOW CENTERLINE DIAGONALS (12' C-C)
04+48.00		RT									4.7						NB BIKE LANE: BIKE SYMBOL
04+74.00		LT									4.7						SB BIKE LANE: BIKE SYMBOL
04+92.50	04+94.50	RT								23.3							NB LANE: SOLID WHITE STOP BAR
05+00.00	05+16.00									72.0							SACRAMENTO SOUTH LEG: SOLID WHITE CROSSWALK
05+12.10	05+46.09	LT								54.0							CONGRESS WEST LEG: SOLID WHITE CROSSWALK
05+12.81	05+47.70	LT								35.3							CONGRESS WEST LEG: SOLID WHITE STOP BAR
05+17.83	05+35.84	RT								30.0							CONGRESS EAST LEG: SOLID WHITE CROSSWALK
05+69.99	05+71.99	LT								23.0							CONGRESS EAST LEG: SOLID WHITE STOP BAR
05+70.98	06+44.67	LT				73.7											SB TURN LANE: SOLID WHITE
		LT			147.4												DOUBLE YELLOW CENTERLINE
		RT		18.4													NB LANES: WHITE SKIP DASH
05+90.00		RT									4.7						NB BIKE LANE: BIKE SYMBOL
06+17.00		LT									4.7						SB BIKE LANE: BIKE SYMBOL
06+44.67	07+10.98	LT												66.3			SB TURN LANE: SOLID WHITE
	09+89.05												688.8				DOUBLE YELLOW CENTERLINE
	09+89.05	RT													86.1	86.1	NB LANES: WHITE SKIP DASH
06+78.83		LT										8.8					SB TURN LANE: LEFT ARROW
06+94.82		LT										11.8					SB TURN LANE: "ONLY"
07+10.98	08+45.98	LT/RT												67.5			NB / SB TURN LANES: WHITE DOTTED
08+02.00		RT										4.7					NB BIKE LANE: BIKE SYMBOL
08+35.00		LT										4.7					SB BIKE LANE: BIKE SYMBOL
08+45.98	09+89.05													143.1			NB TURN LANE: SOLID WHITE
08+62.11		LT										11.8					NB TURN LANE: "ONLY"
08+78.11		LT										8.8					NB TURN LANE: LEFT ARROW
09+89.05	10+45.98	LT			113.9												DOUBLE YELLOW CENTERLINE
	10+60.98					71.9											NB TURN LANE: SOLID WHITE
	10+60.98	RT		18.0													NB LANE: WHITE SKIP DASH
10+15.00		RT									4.7						NB BIKE LANE: BIKE SYMBOL
10+44.99	10+46.99	LT								10.0							NB TURN LANE: SOLID WHITE STOP BAR
10+52.00		LT									4.7						SB BIKE LANE: BIKE SYMBOL
10+59.98	10+61.98	RT								23.0							NB LANE: SOLID WHITE STOP BAR
10+85.14	11+21.87	RT								36.8							VAN BUREN EAST LEG: SOLID WHITE STOP BAR
10+85.92	11+23.91	LT								60.0							VAN BUREN WEST LEG: SOLID WHITE CROSSWALK
10+87.01	11+21.01	RT								54.0							VAN BUREN EAST LEG: SOLID WHITE CROSSWALK
11+29.72	11+36.74									96.0							SOLID WHITE CROSSWALK
11+39.18	13+50.11	LT			708.1												DOUBLE YELLOW CENTERLINE
11+39.70	11+41.70	LT								29.9							SB LANE: SOLID WHITE STOP BAR
11+41.25	12+03.45	LT					124.9	36.7									SB TURN LANE: GORE MARKINGS
11+43.54	12+30.72	LT							35.0								YELLOW CENTERLINE DIAGONALS (6' C-C)
11+41.25	13+50.11	RT		51.2													NB LANE: WHITE SKIP DASH
11+52.95		LT	8.8														SB TURN LANE: RIGHT ARROW
11+59.00		RT									4.7						NB BIKE LANE: BIKE SYMBOL
11+69.10		LT	11.8														SB TURN LANE: "ONLY"
11+87.00		LT									4.7						SB BIKE LANE: BIKE SYMBOL
12+03.45	13+61.24	LT				157.9											SB TURN LANE: SOLID WHITE
13+29.04		LT	8.8														SB TURN LANE: RIGHT ARROW
13+45.05		LT	11.8														SB TURN LANE: "ONLY"

MODEL: Default
FILE NAME: pw:\\PW01.hornershifrin.com:HS_IDOT\Documents\2305600\0-PTB195-007_01_PrelimSht_SuiCollinsCAD_Sheets\D162K65_SacramentoBlvd62K65_SacramentoBlvd62K65-sht-schedule-03.dgn

PAVEMENT MARKING

LOCATION			THERMOPLASTIC PAVEMENT MARKING - LETTERS & SYMBOLS	THERMOPLASTIC PAVEMENT MARKING - LINE 4 INCH WHITE	THERMOPLASTIC PAVEMENT MARKING - LINE 4 INCH YELLOW	THERMOPLASTIC PAVEMENT MARKING - LINE 6 INCH WHITE	THERMOPLASTIC PAVEMENT MARKING - LINE 8 INCH WHITE	THERMOPLASTIC PAVEMENT MARKING - LINE 12 INCH WHITE	THERMOPLASTIC PAVEMENT MARKING - LINE 12 INCH YELLOW	THERMOPLASTIC PAVEMENT MARKING - LINE 24 INCH WHITE	PREFORMED THERMOPLASTIC PAVEMENT MARKING - LETTERS AND SYMBOLS	MODIFIED URETHANE PAVEMENT MARKING - LETTERS & SYMBOLS	MODIFIED URETHANE PAVEMENT MARKING - LINE 4 INCH YELLOW	MODIFIED URETHANE PAVEMENT MARKING - LINE 6 INCH WHITE	PREFORMED PLASTIC PAVEMENT MARKING, TYPE D - 7 INCH WHITE	GROOVING FOR RECESSED PAVEMENT MARKING 8 INCH	REMARKS
STATION	STATION	SIDE	SQ FT	FOOT	FOOT	FOOT	FOOT	FOOT	FOOT	FOOT	SQ FT	SQ FT	FOOT	FOOT	FOOT	FOOT	
CONGRESS PARKWAY																	
250+76.86	253+26.40	LT				250.0											EB LANE: SOLID WHITE
250+79.67	253+29.97	RT				250.0											EB LANE: SOLID WHITE
250+92.60			11.8														CONGRESS WEST LEG: "ONLY"
250+92.94		LT	11.8														CONGRESS WEST LEG: "ONLY"
250+95.94		RT	11.8														CONGRESS WEST LEG: "ONLY"
251+08.61			6.5														CONGRESS WEST LEG: THROUGH ARROW
251+08.85		LT	8.8														CONGRESS WEST LEG: LEFT ARROW
251+12.02		RT	8.8														CONGRESS WEST LEG: RIGHT ARROW
252+92.26		LT	11.8														CONGRESS WEST LEG: "ONLY"
252+95.18			11.8														CONGRESS WEST LEG: "ONLY"
252+99.53		RT	11.8														CONGRESS WEST LEG: "ONLY"
253+08.25		LT	8.8														CONGRESS WEST LEG: THROUGH ARROW
253+11.19			6.5														CONGRESS WEST LEG: LEFT ARROW
253+15.54		RT	8.8														CONGRESS WEST LEG: RIGHT ARROW
VAN BUREN STREET																	
111+61.39	112+92.34	RT		32.7													VAN BUREN WEST LEG: WHITE SKIP DASH
113+77.35	116+40.48	RT				263.1											WB LANE: SOLID WHITE
113+77.51	115+90.18	LT				212.7											WB LANE: SOLID WHITE
113+94.37		LT	8.8														VAN BUREN EAST LEG: RIGHT ARROW
113+95.40			6.5														VAN BUREN EAST LEG: THROUGH ARROW
113+97.51		RT	14.7														VAN BUREN EAST LEG: THROUGH / LEFT ARROW
114+10.37		LT	11.8														VAN BUREN EAST LEG: "ONLY"
114+11.39			11.8														VAN BUREN EAST LEG: "ONLY"
115+58.06		LT	8.8														VAN BUREN EAST LEG: RIGHT ARROW
115+74.06		LT	11.8														VAN BUREN EAST LEG: "ONLY"
SCHEDULE TOTAL			255	171	1455	1356	125	37	81	576	38	51	689	277	86	86	
SCHEDULE PAY			255	1627		1357	125	118		577	38	51	689	277	87	87	

MODEL: Default
FILE NAME: pw:\\PW01.hornershifrin.com:HS IDOT\Documents\2305600\00-PTB 195-007_01_Pro_Sac_Phil_SuiCollins\CAD Sheets\ID 162K65_SacramentoID 162K65-pht-schedule-03.dgn

HORNER SHIFRIN
WWW. HORNERSHIFRIN .COM

USER NAME = krkubalanza	DESIGNED -	REVISED -
	DRAWN -	REVISED -
PLOT SCALE = 10.0000 ' / in.	CHECKED -	REVISED -
PLOT DATE = 11/20/2025	DATE -	REVISED -

STATE OF ILLINOIS
DEPARTMENT OF TRANSPORTATION

SACRAMENTO BOULEVARD OVER FAI–290 (EISENHOWER EXPRESSWAY)
SCHEDULE OF QUANTITIES

SCALE: NTS | SHEET 5 OF 5 SHEETS | STA. | TO STA.

F.A.J. RTE.	SECTION	COUNTY	TOTAL SHEETS	SHEET NO.
290	2019-192-B-R	COOK	237	29
		CONTRACT NO. 62K65		
	ILLINOIS	FED. AID PROJECT		

LOCATION													PAVEMENT MARKINGS					RRPM REMOVAL AND REPLACEMENT					
STREET	STA	STA	OFF (RT/LT/CTR)	TYPE OF MARKING					LENGTH	PMK SPACING			THERMOPLASTIC PAVEMENT MARKING - LINE 4"	THERMOPLASTIC PAVEMENT MARKING - LINE 5"	THERMOPLASTIC PAVEMENT MARKING - LINE 8"	THERMOPLASTIC PAVEMENT MARKING - LINE 12"	COLOR	RRPM SPACING			RAISED REFLECTIVE PAVEMENT MARKER, REFLECTOR REMOVAL (SEE NOTE 1)	RAISED RELECTIVE PAVEMENT MARKER, REFLECTOR REPLACEMENT (SEE NOTE 1)
													FOOT	FOOT	FOOT	FOOT					EACH	EACH
I-290 WB	1056+58	1072+72	RT	EDGE LINE	THERMOPLASTIC	4	YELLOW	SOLID	1610	1	@	1	1,610	-	-	-					-	-
I-290 WB	1056+58	1072+72	RT	LANE LINE-GROOVED	THERMOPLASTIC	5	WHITE	SKIP DASH	1611	10	@	40	-	410	-	-	CRYSTAL	2	@	80	42	42
I-290 WB	1056+56	1072+72	RT	LANE LINE-GROOVED	THERMOPLASTIC	5	WHITE	SKIP DASH	1613	10	@	40	-	410	-	-	CRYSTAL	2	@	80	42	42
I-290 WB	1056+58	1072+72	CTR	LANE LINE-GROOVED	THERMOPLASTIC	5	WHITE	SKIP DASH	1615	10	@	40	-	410	-	-	CRYSTAL	2	@	80	42	42
I-290 WB	1056+89	1058+74	LT	GORE EDGE	THERMOPLASTIC	8	WHITE	SOLID	185	1	@	1	-	-	185	-					-	-
I-290 WB	1056+89	1058+74	LT	GORE STRIPING	THERMOPLASTIC	12	WHITE	SOLID	61	1	@	1	-	-	-	61					-	-
I-290 WB	1058+74	1072+73	LT	EDGE LINE	THERMOPLASTIC	4	WHITE	SOLID	1401	1	@	1	1,401	-	-	-					-	-
I-290 EB	1056+66	1072+70	LT	EDGE LINE	THERMOPLASTIC	4	YELLOW	SOLID	1609	1	@	1	1,610	-	-	-					-	-
I-290 EB	1056+66	1072+70	LT	LANE LINE-GROOVED	THERMOPLASTIC	5	WHITE	SKIP DASH	1607	10	@	40	-	410	-	-	CRYSTAL	2	@	80	42	42
I-290 EB	1056+66	1072+70	LT	LANE LINE-GROOVED	THERMOPLASTIC	5	WHITE	SKIP DASH	1606	10	@	40	-	410	-	-	CRYSTAL	2	@	80	42	42
I-290 EB	1056+46	1072+71	RT	LANE LINE-GROOVED	THERMOPLASTIC	5	WHITE	SKIP DASH	1604	10	@	40	-	410	-	-	CRYSTAL	2	@	80	42	42
I-290 EB	1056+74	1058+40	RT	GORE EDGE	THERMOPLASTIC	8	WHITE	SOLID	167	1	@	1	-	-	167	-					-	-
I-290 EB	1056+74	1058+40	RT	GORE STRIPING	THERMOPLASTIC	12	WHITE	SOLID	108	1	@	1	-	-	-	108					-	-
I-290 EB	1058+40	1072+70	RT	EDGE LINE	THERMOPLASTIC	4	WHITE	SOLID	1427	1	@	1	1,428	-	-	-					-	-
									TOTAL =				6,049	2,460	352	169					252	252

NOTES

1. REFLECTOR UNITS WILL BE REMOVED IN STAGE 1 AND REINSTALLED UPON COMPLETION OF STAGE 2 WHEN ALL LANES ALONG I-290 ARE RETURNED TO THE ORIGINAL CONFIGURATION. QUANTITY FOR REMOVAL AND INSTALLATION OF REFLECTORS ARE PROVIDED.

FILE NAME = P:\10-IL\14111-IDOT - Sacramento and Paulina over I-290\Work\CADD\Sacramento - Contract 62K65\CADD_Sheets\D162K65-sht-gmm-01.dgn

COLLINS ENGINEERS INC.

USER NAME = omartinez	DESIGNED - OM	REVISED -	
	DRAWN - OM	REVISED -	
PLOT SCALE = 40.0000 ' / in.	CHECKED - RG	REVISED -	
PLOT DATE = 10/16/2025	DATE - 09/12/2025	REVISED -	

STATE OF ILLINOIS
DEPARTMENT OF TRANSPORTATION

FAI–290 (EISENHOWER EXPRESSWAY) AT SACRAMENTO BOULEVARD
PAVEMENT MARKINGS (I–290) SCHEDULE OF QUANTITIES

SCALE: NTS | SHEET NO. 1 OF 1 SHEETS | STA. | TO STA.

F.A.I. RTE.	SECTION	COUNTY	TOTAL SHEETS	SHEET NO.
290	2019-192-B-R	COOK	237	30
		CONTRACT NO. 62K65		
FED. ROAD DIST. NO.	ILLINOIS	FED. AID PROJECT		

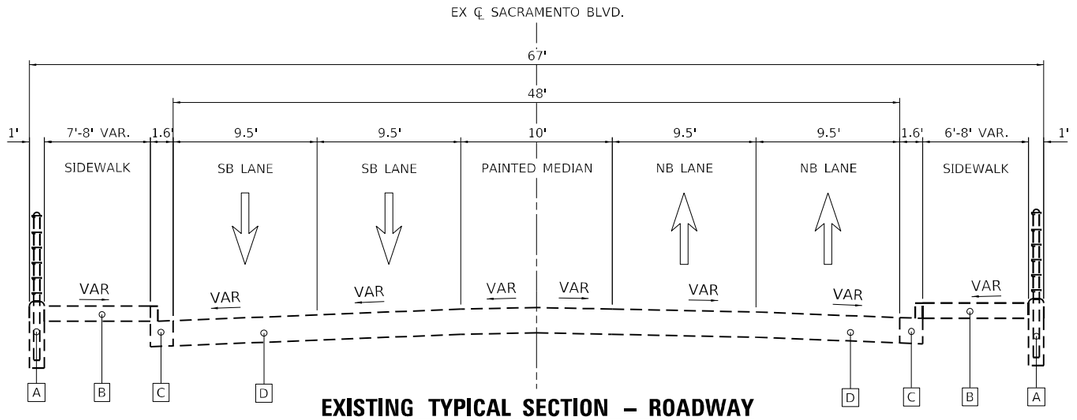

EXISTING TYPICAL SECTION – ROADWAY

STA. 04+10.75 TO STA. 05+42.19
STA. 10+85.26 TO STA. 11+51.10

EXISTING TYPICAL LEGEND

- A CHAIN LINK FENCE
- B SIDEWALK
- C CURB AND GUTTER
- D HMA PAVEMENT, 10" (ANTICIPATED)

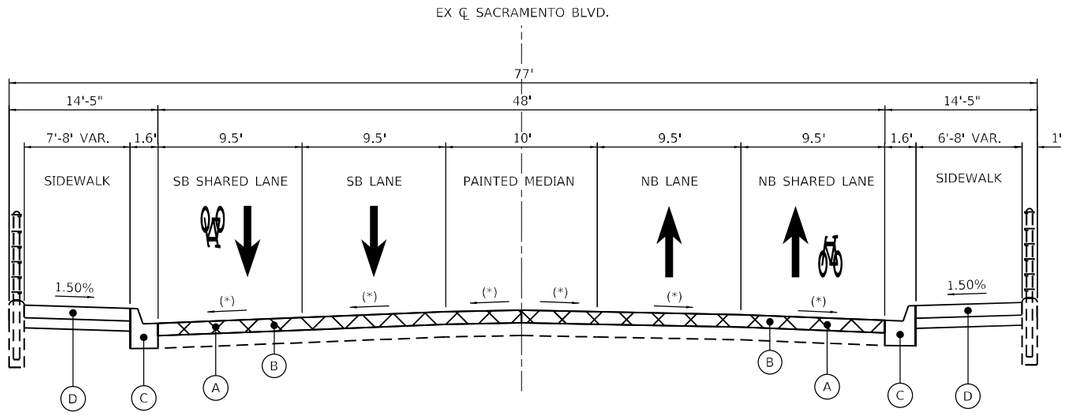

PROPOSED TYPICAL SECTION – ROADWAY MILL AND OVERLAY

STA. 04+10.75 TO STA. 05+42.19
STA. 10+85.26 TO STA. 11+51.10

PROPOSED TYPICAL LEGEND

- (A) POLYMERIZED HMA SURFACE COURSE, IL-9.5, MIX "E", N70, 2"
- (B) HOT-MIX ASPHALT SURFACE REMOVAL, 2"
- (C) COMBINATION CONCRETE CURB & GUTTER, TYPE B V-.12 (CDOT)
  GUTTER SLOPE: 2.0% WITHIN RECON AREA; MATCH PATCH SLOPE WITHIN PATCHING AREAS.
- (D) PCC SIDEWALK
  - (1) PORTLAND CEMENT CONCRETE SIDEWALK 5" OR PORTLAND CEMENT CONCRETE SIDEWALK 8"
  - (2) SUBBASE GRANULAR MATERIAL, TYPE B 4"
- (*) MATCH EXISTING SLOPE

NOTES

1. THE MILL AND OVERLAY SECTION NORTH OF THE SACRAMENTO BLVD BRIDGE FROM STA. 10+85.26 TO STA. 11+51.10 IS MOSTLY INSIDE THE INTERSECTION OF SACRAMENTO BLVD AND VAN BUREN ST AND DOES NOT FOLLOW THIS TYPICAL SECTION LAYOUT. THE HMA MILL AND OVERLAY DEPTH AND MATERIAL ARE THE SAME.
2. THE LONGITUDINAL JOINT SEALANT SHALL BE PLACED UNDER THE HMA SURFACE MIX.

MODEL: Default
FILE NAME: z:\xfpw01.hornershifrin.com\HS_IDOT_Documents\23056000-PTB195-007_D1_Pro_J-Sac_Phil_Sis_Collins\CAD Sheets\D162K65_Sacramento\D162K65-sht-typsht-sl01.dgn

HORNER SHIFRIN
WWW. HORNERSHIFRIN .COM

USER NAME = ahernandez	DESIGNED -	REVISED -
	DRAWN -	REVISED -
PLOT SCALE = 10.0000 ' / in.	CHECKED -	REVISED -
PLOT DATE = 10/7/2025	DATE -	REVISED -

STATE OF ILLINOIS
DEPARTMENT OF TRANSPORTATION

SACRAMENTO BOULEVARD OVER FAI–290 (EISENHOWER EXPRESSWAY)
TYPICAL SECTIONS

SCALE: NTS | SHEET 1 OF 2 SHEETS | STA. | TO STA.

F.A.I. RTE.	SECTION	COUNTY	TOTAL SHEETS	SHEET NO.
290	2019-192-B-R	COOK	237	31
		CONTRACT NO. 62K65		
		ILLINOIS	FED. AID PROJECT	

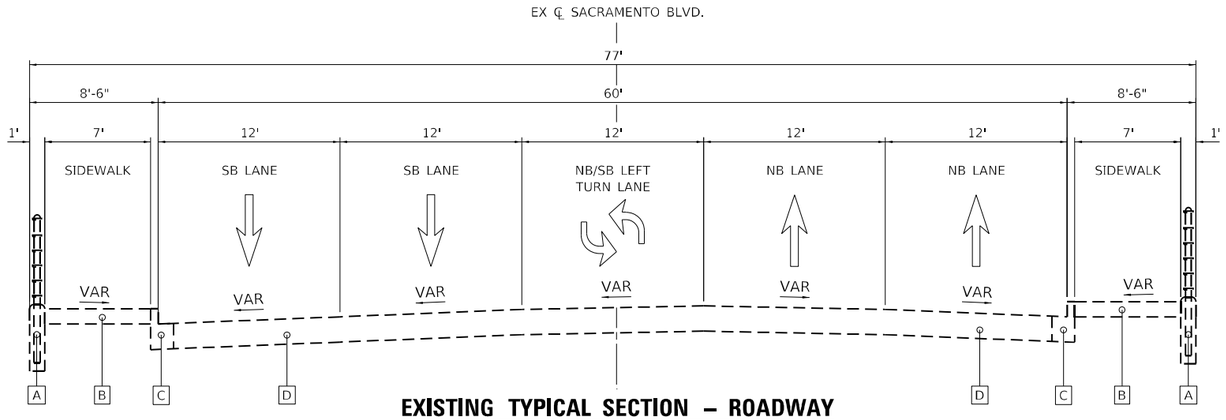

EXISTING TYPICAL SECTION – ROADWAY

STA. 05+42.19 TO STA. 09+69.06
BRIDGE OMISSION: STA. 07+11.40 TO STA. 09+21.18
STA. 09+21.18 TO STA. 10+85.26

APPROACH SLAB REMOVAL TO BE COMPLETED BETWEEN STA. 06+63.66 TO STA. 07+11.40 AND STA. 09+21.18 TO STA. 09+69.06.

EXISTING TYPICAL LEGEND

- A CHAIN LINK FENCE
- B SIDEWALK
- C CURB AND GUTTER
- D HMA PAVEMENT, 10" (ANTICIPATED)

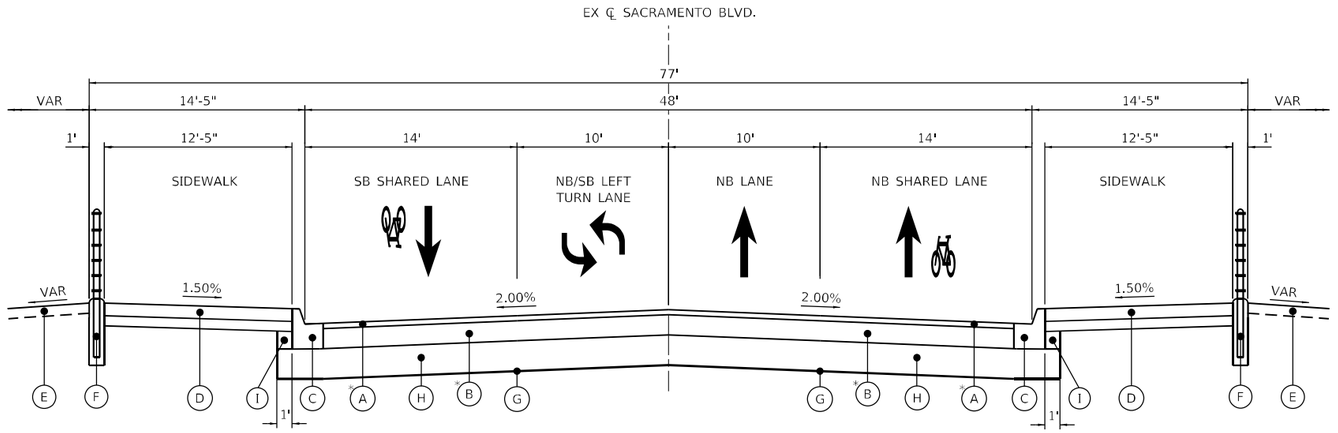

PROPOSED TYPICAL SECTION – ROADWAY RECONSTRUCTION

STA. 05+42.19 TO STA. 06+44.67
BRIDGE OMISSION: STA. 06+44.67 TO STA. 09+89.05
STA. 09+89.05 TO STA. 10+85.26

* PAVEMENT CONNECTOR (PCC) FOR BRIDGE APPROACH SLAB (STD 420401) FROM STA 06+44.67 TO STA 06+63.47 ON SOUTH SIDE OF BRIDGE AND STA 09+70.24 TO STA 09+89.05 ON NORTH SIDE OF BRIDGE.

PROPOSED TYPICAL LEGEND

- (A) POLYMERIZED HMA SURFACE COURSE, IL-9.5, MIX "E", N70, 2"
- (B) HMA BASE COURSE, 8"
- (C) COMBINATION CONCRETE CURB & GUTTER, TYPE B V-.12 (CDOT)
  GUTTER SLOPE: 2.0% WITHIN RECON AREA; MATCH PATCH SLOPE WITHIN PATCHING AREAS.
- (D) PCC SIDEWALK
  - (1) PORTLAND CEMENT CONCRETE SIDEWALK 5" OR PORTLAND CEMENT CONCRETE SIDEWALK 8"
  - (2) SUBBASE GRANULAR MATERIAL, TYPE B 4"
- (E) TOPSOIL EXCAVATION AND PLACEMENT, SEEDING OR SODDING, FERTILIZER, AND EROSION CONTROL BLANKET
- (F) CHAIN LINK FENCE, 6'
- (G) GEOTECHNICAL FABRIC FOR GROUND STABILIZATION
- (H) AGGREGATE SUBGRADE IMPROVEMENT, 12"
- (I) AGGREGATE SUBGRADE IMPROVEMENT (CU YD)

NOTES

1. CITY OF CHICAGO STANDARD, A-2-6, PERMITS CURB HEIGHT TO VARY BETWEEN 3 AND 9 INCHES. THE RECONSTRUCTION AREA WAS DESIGNED BASED OFF A 6-INCH CURB HEIGHT.
2. THE LONGITUDINAL JOINT SEALANT SHALL BE PLACED UNDER THE HMA SURFACE MIX.

MODEL: Default
FILE NAME: z:\x\PW01\hornershifrin.com\HS IDOT Documents\230560000-PTB195-007 D1 Pr...ll-Sac_Phil_Sis_Collins\CAD Sheets\D162K65_Sacramento\D162K65-sht-typdt-sl402.dgn

HORNER SHIFRIN WWW. HORNERSHIFRIN .COM	USER NAME = krkubalanza	DESIGNED -	REVISED -	STATE OF ILLINOIS DEPARTMENT OF TRANSPORTATION	SACRAMENTO BOULEVARD OVER FAI-290 (EISENHOWER EXPRESSWAY) TYPICAL SECTIONS
		DRAWN -	REVISED -		
	PLOT SCALE = 10.0000 ' / in.	CHECKED -	REVISED -		
	PLOT DATE = 10/7/2025	DATE -	REVISED -		SCALE: NTS | SHEET 2 OF 2 SHEETS | STA. | TO STA.

F.A.I. RTE.	SECTION	COUNTY	TOTAL SHEETS	SHEET NO.
290	2019-192-B-R	COOK	237	32
		CONTRACT NO. 62K65		
		ILLINOIS	FED. AID PROJECT	

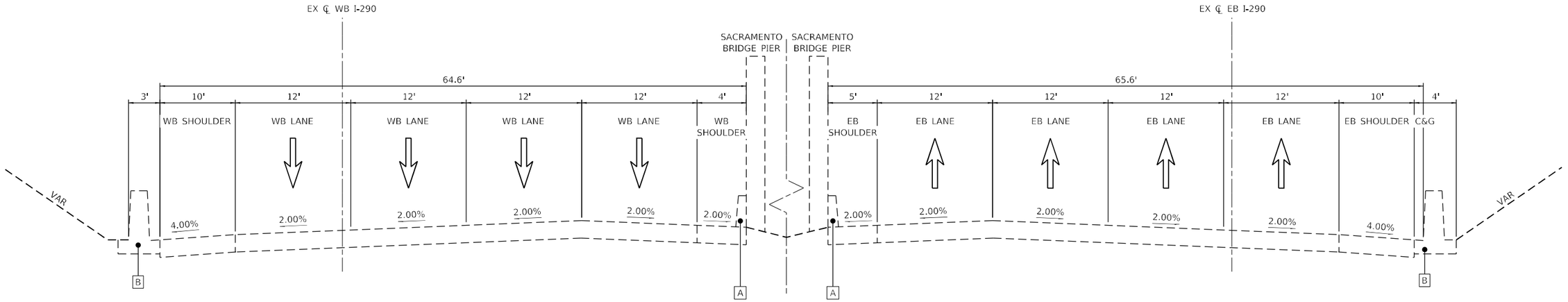

EXISTING I–290 (WB) TYPICAL SECTION

(LOOKING EAST)
STA. 1061+00 TO STA. 1064+38.95
STA. 1065+08.41 TO STA. 1068+00

EXISTING I–290 (EB) TYPICAL SECTION

(LOOKING EAST)
STA. 1059+50 TO STA. 1064+22.43
STA. 1064+91.64 TO STA. 1068+00

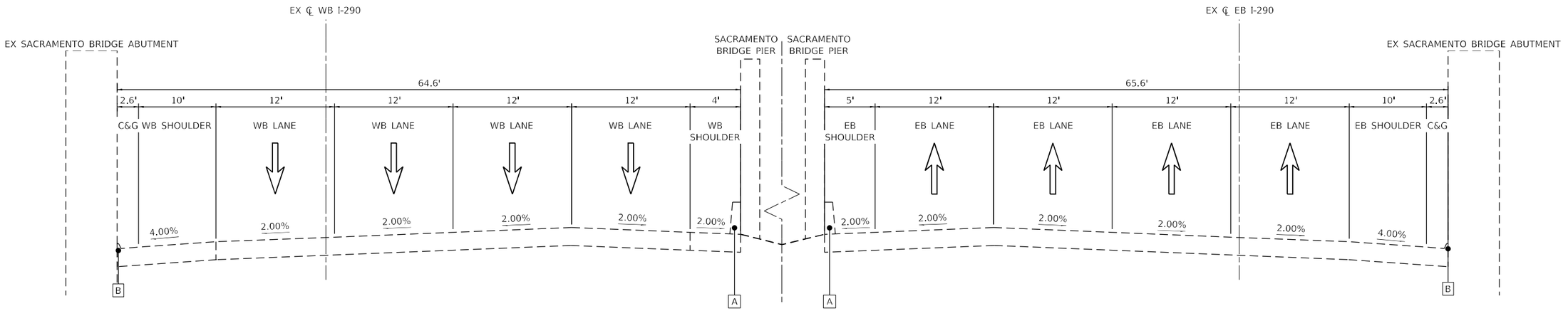

EXISTING I–290 (WB) TYPICAL SECTION UNDER SACRAMENTO BRIDGE

(LOOKING EAST)
STA. 1064+38.95 TO STA. 1065+08.41

EXISTING I–290 (EB) TYPICAL SECTION UNDER SACRAMENTO BRIDGE

(LOOKING EAST)
STA. 1064+22.43 TO STA. 1064+91.64

EXISTING TYPICAL LEGEND

A EX CONCRETE BARRIER

B EX C&G

MODEL: Default
FILE NAME: pw:\\PW01.hornershifrin.com:HS IDOT\Documents\230560000-PTB195-007_D1_Paul-Sac_Phil_SubCollins\CAD_Sheets\D162K65_Sacramento\D162K65-sht-typical-I-290.dgn

HORNER SHIFRIN WWW.HORNERSHIFRIN.COM	USER NAME = ahernandez	DESIGNED -	REVISED -
		DRAWN -	REVISED -
	PLOT SCALE = 10.0000 ' / in.	CHECKED -	REVISED -
	PLOT DATE = 10/7/2025	DATE -	REVISED -

STATE OF ILLINOIS
DEPARTMENT OF TRANSPORTATION

FAI–29 (EISENHOWER EXPRESSWAY)
TYPICAL SECTIONS

SCALE: NTS | SHEET 1 OF 2 SHEETS | STA. TO STA.

F.A.I. RTE.	SECTION	COUNTY	TOTAL SHEETS	SHEET NO.
290	2019-192-B-R	COOK	237	33
		CONTRACT NO. 62K65		
		ILLINOIS FED. AID PROJECT		

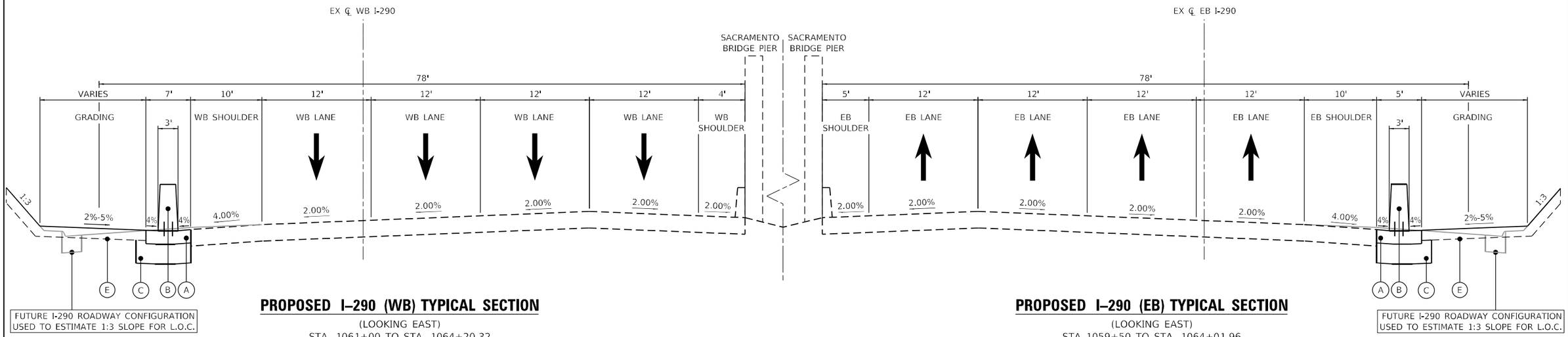

PROPOSED I–290 (WB) TYPICAL SECTION

(LOOKING EAST)
STA. 1061+00 TO STA. 1064+20.32
STA. 1065+45.41 TO STA. 1068+00

PROPOSED I–290 (EB) TYPICAL SECTION

(LOOKING EAST)
STA 1059+50 TO STA. 1064+01.96
STA. 1065+14.75 TO STA. 1068+00

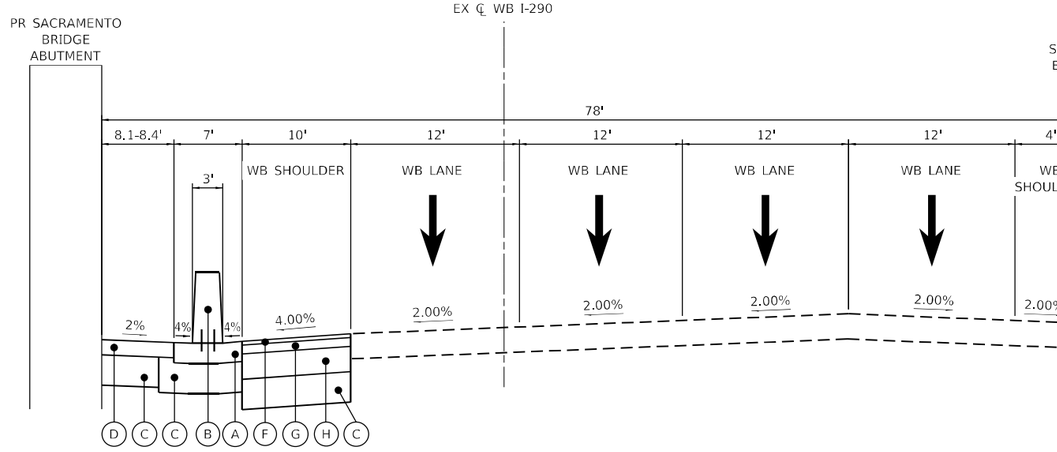

PROPOSED I–290 (WB) TYPICAL SECTION UNDER SACRAMENTO BRIDGE

(LOOKING EAST)
1064+20.32 TO STA. 1065+45.41

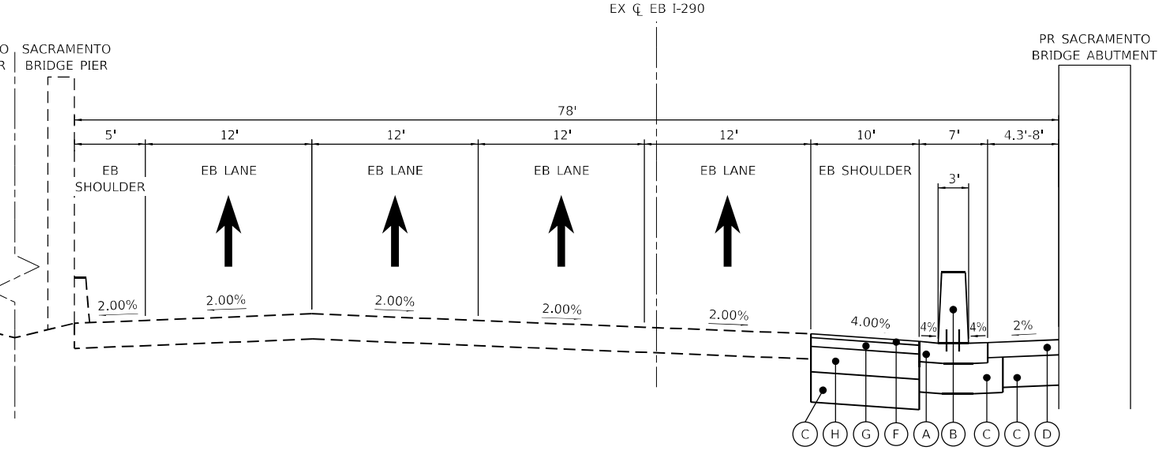

PROPOSED I–290 (EB) TYPICAL SECTION UNDER SACRAMENTO BRIDGE

(LOOKING EAST)
STA. 1064+01.96 TO STA. 1065+14.75

PROPOSED TYPICAL LEGEND

- (A) CONCRETE BARRIER BASE (SPECIAL)
- (B) CONCRETE BARRIER, DOUBLE FACED, 44 INCH HEIGHT
- (C) AGGREGATE SUBGRADE IMPROVEMENT, 12"
- (D) CONCRETE MEDIAN SURFACE, 6 INCH
- (E) TOPSOIL EXCAVATION AND PLACEMENT (SEE LANDSCAPING PLANS)
- (F) HOT-MIX ASPHALT SURFACE COURSE, IL-9.5, MIX "D", N70, 1-1/2"
- (G) HOT-MIX ASPHALT BINDER COURSE, IL-19.0, N70, 3-1/2"
- (H) PORTLAND CEMENT CONCRETE BASE COURSE 10"

HORNER SHIFRIN
WWW.HORNERSHIFRIN.COM

USER NAME = ahernandez	DESIGNED -	REVISED -	
	DRAWN -	REVISED -	
PLOT SCALE = 10.0000 ' / in.	CHECKED -	REVISED -	
PLOT DATE = 10/7/2025	DATE -	REVISED -	

STATE OF ILLINOIS
DEPARTMENT OF TRANSPORTATION

FAI–29 (EISENHOWER EXPRESSWAY)
TYPICAL SECTIONS

SCALE: NTS | SHEET 2 OF 2 SHEETS | STA. | TO STA.

F.A.I. RTE.	SECTION	COUNTY	TOTAL SHEETS	SHEET NO.
290	2019-192-B-R	COOK	237	34
		CONTRACT NO. 62K65		
	ILLINOIS FED. AID PROJECT			

MODEL: Default
FILE NAME: z:\pw01.hornershifrin.com\HS IDOT\Documents\330560000-PTB195-007_01_Prod-Stor_PhIF_SuJoCollins\CAD Sheets\D162K65_SacramentoID162K65-sht-typical-I-290.dgn

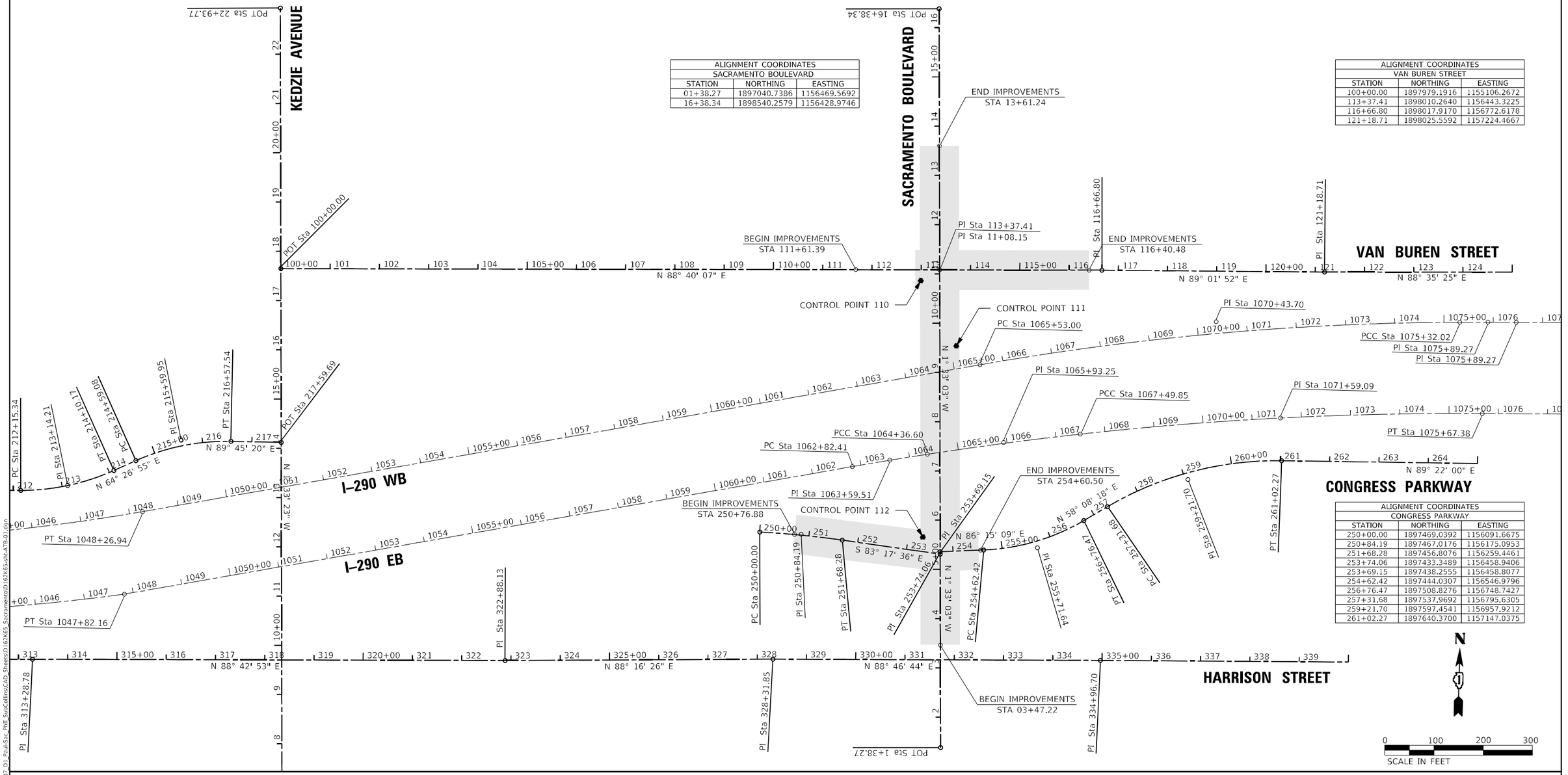

ALIGNMENT COORDINATES		
SACRAMENTO BOULEVARD		
STATION	NORTHING	EASTING
01+38.27	1897040.7386	1156469.5692
16+38.34	1898540.2579	1156428.9746

ALIGNMENT COORDINATES		
VAN BUREN STREET		
STATION	NORTHING	EASTING
100+00.00	1897979.1916	1155106.2672
113+37.41	1898010.2640	1156443.3225
116+66.80	1898017.9170	1156772.6178
121+18.71	1898025.5592	1157224.4667

ALIGNMENT COORDINATES		
CONGRESS PARKWAY		
STATION	NORTHING	EASTING
250+00.00	1897469.0392	1156091.6675
250+84.19	1897467.0176	1156175.0953
251+68.28	1897456.8076	1156259.4461
253+74.06	1897433.3489	1156458.9406
253+69.15	1897438.2555	1156458.8077
254+62.42	1897444.0307	1156546.9796
256+76.47	1897508.8276	1156748.7427
257+31.68	1897537.9692	1156795.6305
259+21.70	1897597.4541	1156957.9212
261+02.27	1897640.3700	1157147.0375

BENCHMARKS

BOX CUT ON N.E. CORNER OF IDOT TRAFFIC SIGNAL CONTROLLER FOUNDATION AT N.W. CORNER OF W. VAN BUREN ST. A S. SACRAMENTO BLVD.
ELEV. 596.92.

MODEL: Default
FILE NAME: pw:\\PW01.hornershifrin.com:HS IDOT\Documents\23056000-PTB195-007 D1 Paul-Sac_PhII_SuisCollins\CAD Sheets\D162K65_Sacramento\D162K65-sht-ATB-01.dgn

HORNER SHIFRIN WWW.HORNERSHIFRIN.COM	USER NAME = ahernandez	DESIGNED -	REVISED -	STATE OF ILLINOIS DEPARTMENT OF TRANSPORTATION	SACRAMENTO BOULEVARD OVER FAI-290 (EISENHOWER EXPRESSWAY) ALIGNMENT, TIES, & BENCHMARKS
		DRAWN -	REVISED -		
	PLOT SCALE = 200.0000 ' / in.	CHECKED -	REVISED -		
	PLOT DATE = 9/11/2025	DATE -	REVISED -		SCALE: 1" = 100' SHEET 1 OF 2 SHEETS STA. TO STA.

F.A.I. RTE.	SECTION	COUNTY	TOTAL SHEETS	SHEET NO.
290	2019-192-B-R	COOK	237	35
		CONTRACT NO. 62K65		
		ILLINOIS FED. AID PROJECT		

CONTROL POINT 110

NORTHING: 1897987.5090
EASTING: 1156405.600
ELEV. = 595.0130

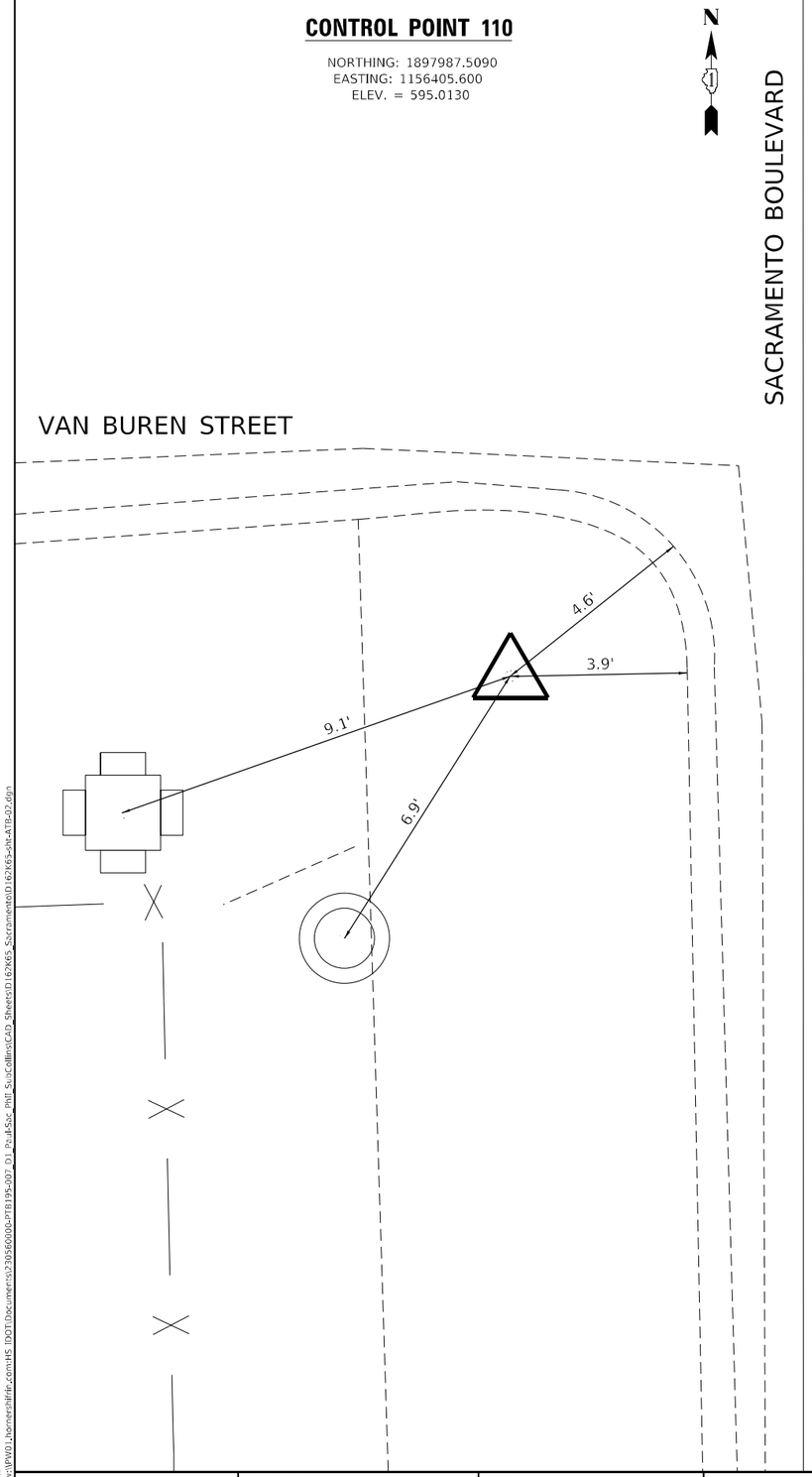

CONTROL POINT 111

NORTHING: 1897856.9230
EASTING: 1156480.9650
ELEV. = 598.7500

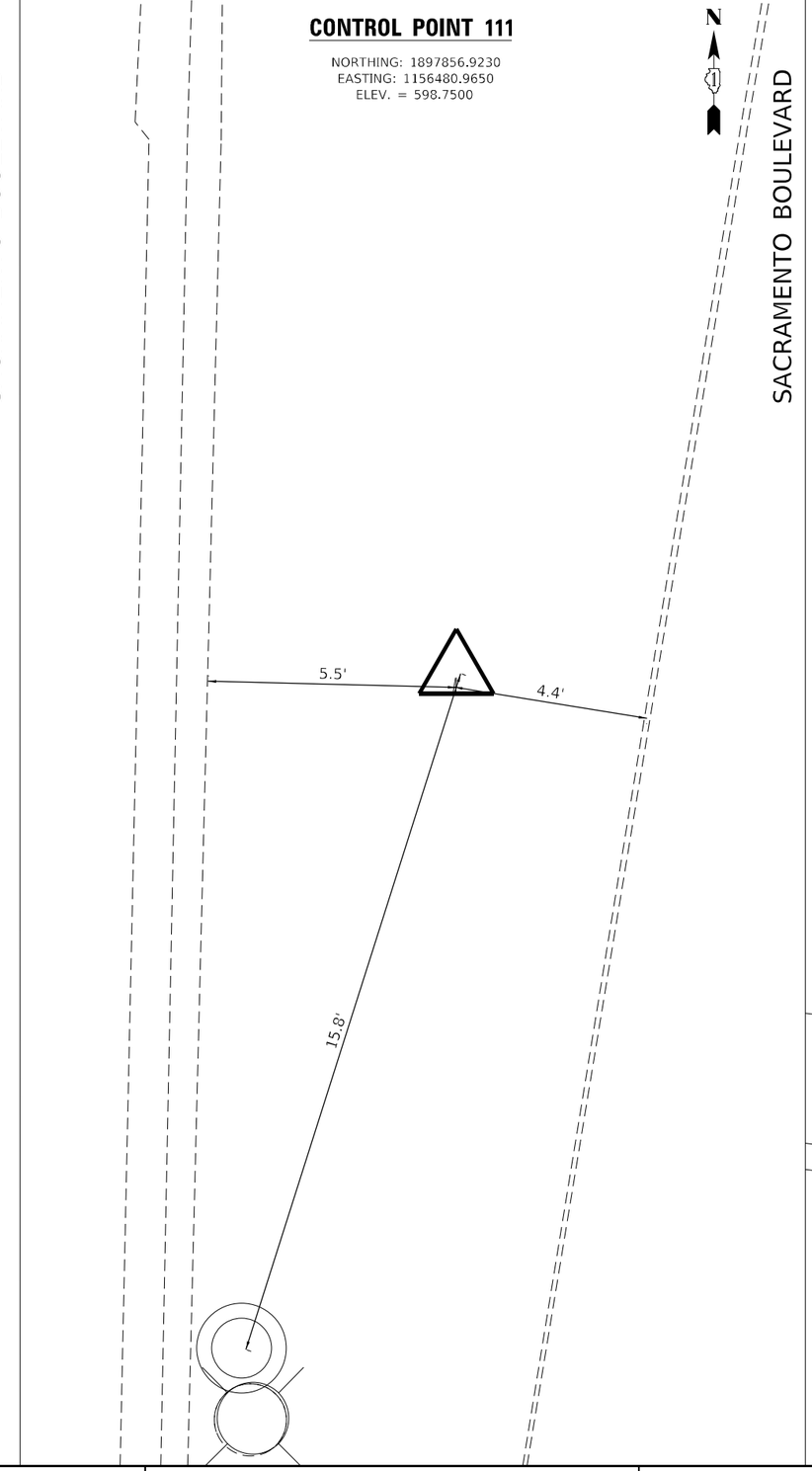

CONTROL POINT 112

NORTHING: 1897467.2410
EASTING: 1156422.8230
ELEV. = 595.4550

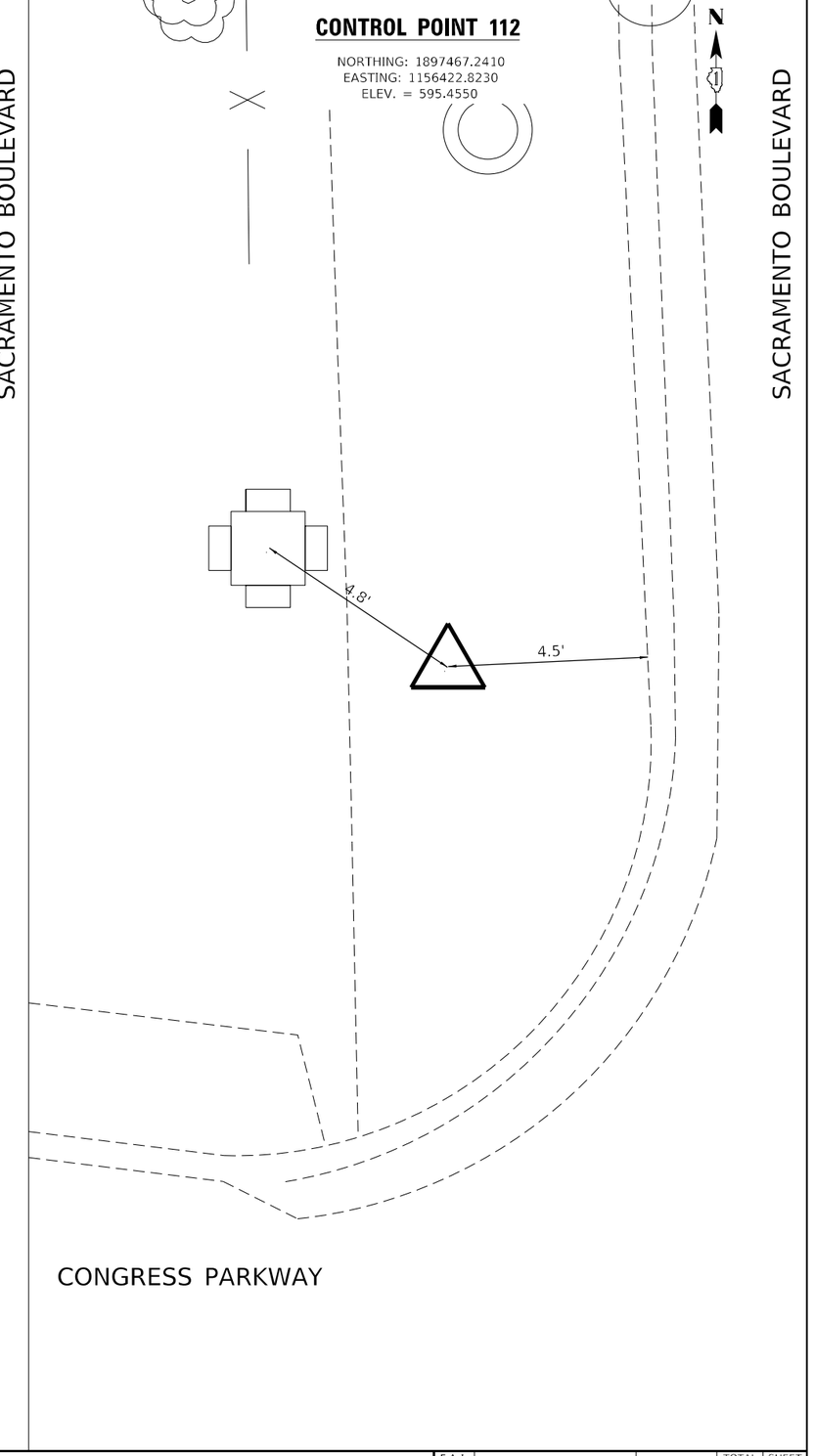

MODEL: Default
FILE NAME: pw:\\PW01.hornershifrin.com:HS_IDOT\Documents\230560000-PTB195-007_01_Prj.uLSsp_Phlf_SuiaCollins\CAD Sheets\D162K65_SacramentoID162K65_ahTrATTR-02.dgn

HORNER SHIFRIN
WWW. HORNERSHIFRIN .COM

USER NAME = ahernandez	DESIGNED -	REVISED -
	DRAWN -	REVISED -
PLOT SCALE = 3.3333 ' / in.	CHECKED -	REVISED -
PLOT DATE = 9/11/2025	DATE -	REVISED -

STATE OF ILLINOIS
DEPARTMENT OF TRANSPORTATION

SACRAMENTO BOULEVARD OVER FAI–290 (EISENHOWER EXPRESSWAY)
ALIGNMENT, TIES, & BENCHMARKS

SCALE: 1" = 100' | SHEET 2 OF 2 SHEETS | STA. | TO STA.

F.A.I. RTE.	SECTION	COUNTY	TOTAL SHEETS	SHEET NO.
290	2019-192-B-R	COOK	237	36
		CONTRACT NO. 62K65		
	ILLINOIS FED. AID PROJECT			

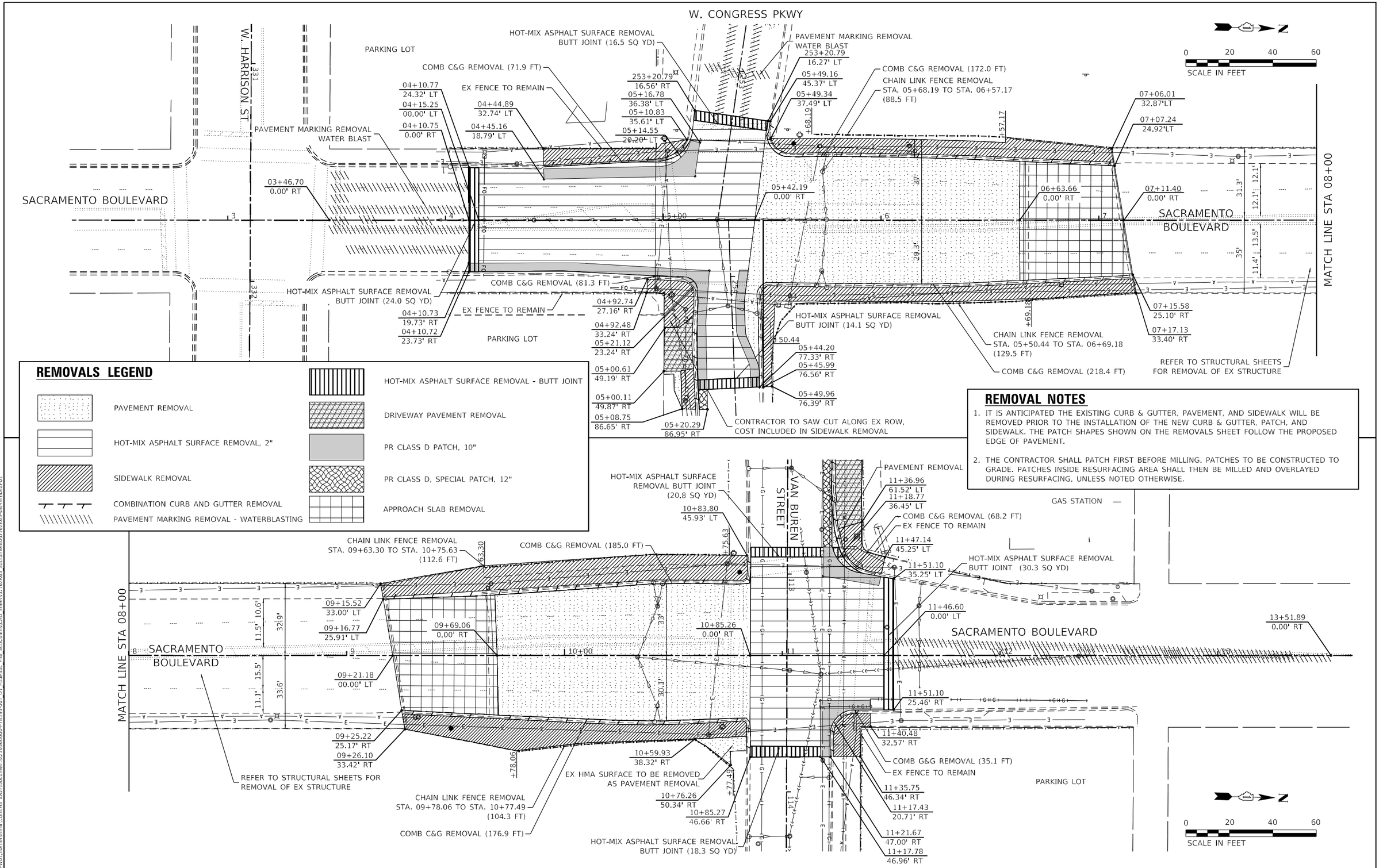

REMOVALS LEGEND

- PAVEMENT REMOVAL
- HOT-MIX ASPHALT SURFACE REMOVAL, 2"
- SIDEWALK REMOVAL
- COMBINATION CURB AND GUTTER REMOVAL
- PAVEMENT MARKING REMOVAL - WATERBLASTING
- HOT-MIX ASPHALT SURFACE REMOVAL - BUTT JOINT
- DRIVEWAY PAVEMENT REMOVAL
- PR CLASS D PATCH, 10"
- PR CLASS D, SPECIAL PATCH, 12"
- APPROACH SLAB REMOVAL

REMOVAL NOTES

1. IT IS ANTICIPATED THE EXISTING CURB & GUTTER, PAVEMENT, AND SIDEWALK WILL BE REMOVED PRIOR TO THE INSTALLATION OF THE NEW CURB & GUTTER, PATCH, AND SIDEWALK. THE PATCH SHAPES SHOWN ON THE REMOVALS SHEET FOLLOW THE PROPOSED EDGE OF PAVEMENT.
2. THE CONTRACTOR SHALL PATCH FIRST BEFORE MILLING. PATCHES TO BE CONSTRUCTED TO GRADE. PATCHES INSIDE RESURFACING AREA SHALL THEN BE MILLED AND OVERLAYED DURING RESURFACING, UNLESS NOTED OTHERWISE.

MODEL: Default
FILE NAME: z:\x\IPW0.Hornershifrin.com\HS TDOT\Documents\2305600\0-PTB195-007 D1 Pkwd\Sac Pkwy\SLucCellnis\CAD Sheets\D162K65_Sacramento\D162K65-sht-removal01

HORNER SHIFRIN
WWW. HORNERSHIFRIN .COM

USER NAME = ahernandez	DESIGNED -	REVISED -
	DRAWN -	REVISED -
PLOT SCALE = 40.0000 ' / in.	CHECKED -	REVISED -
PLOT DATE = 10/7/2025	DATE -	REVISED -

STATE OF ILLINOIS
DEPARTMENT OF TRANSPORTATION

SACRAMENTO BOULEVARD OVER FAI–290 (EISENHOWER EXPRESSWAY)
ROADWAY REMOVAL PLAN

SCALE: 1" = 20' | SHEET 1 OF 3 SHEETS | STA. | TO STA.

F.A.I. RTE.	SECTION	COUNTY	TOTAL SHEETS	SHEET NO.
290	2019-192-B-R	COOK	237	37
		CONTRACT NO. 62K65		
	ILLINOIS FED. AID PROJECT			

REMOVAL NOTES

1. IT IS ANTICIPATED THE EXISTING CURB & GUTTER, PAVEMENT, AND SIDEWALK WILL BE REMOVED PRIOR TO THE INSTALLATION OF THE NEW CURB & GUTTER, PATCH, AND SIDEWALK. THE PATCH SHAPES SHOWN ON THE REMOVALS SHEET FOLLOW THE PROPOSED EDGE OF PAVEMENT.

2. THE CONTRACTOR SHALL PATCH FIRST BEFORE MILLING. PATCHES TO BE CONSTRUCTED TO GRADE. PATCHES INSIDE RESURFACING AREA SHALL THEN BE MILLED AND OVERLAYED DURING RESURFACING, UNLESS NOTED OTHERWISE.

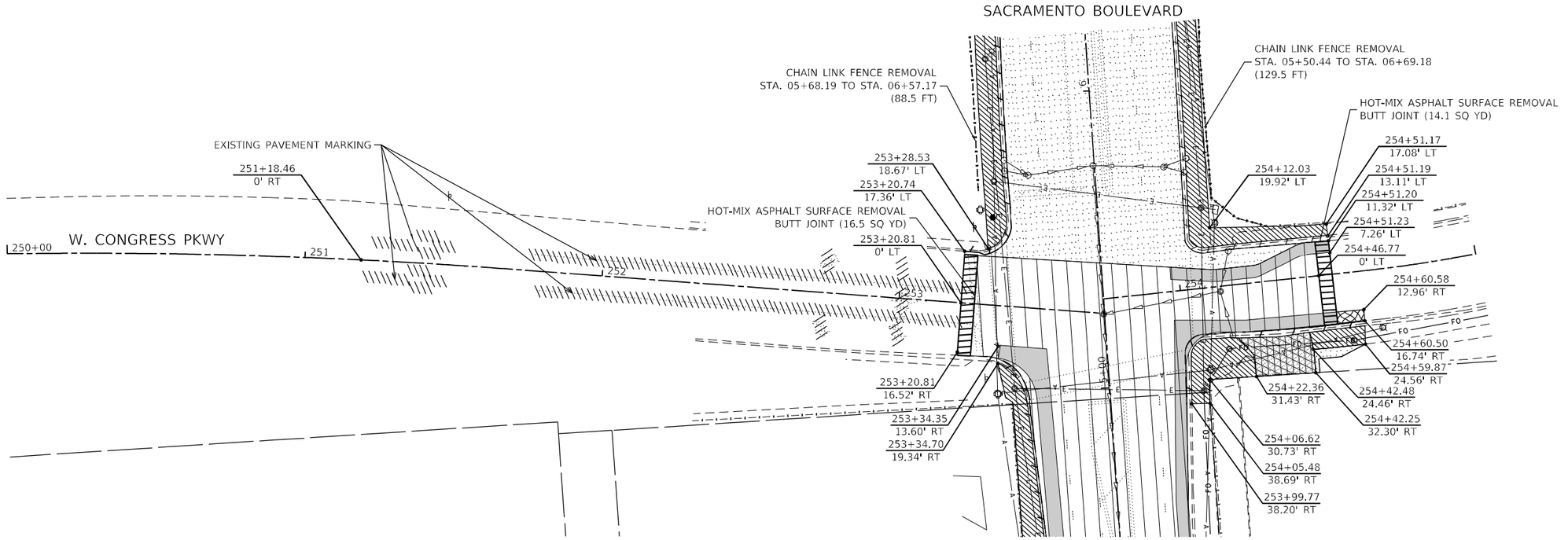

REMOVALS LEGEND

- PAVEMENT REMOVAL
- HOT-MIX ASPHALT SURFACE REMOVAL, 2"
- SIDEWALK REMOVAL
- COMBINATION CURB AND GUTTER REMOVAL
- PAVEMENT MARKING REMOVAL - WATERBLASTING
- HOT-MIX ASPHALT SURFACE REMOVAL - BUTT JOINT
- DRIVEWAY PAVEMENT REMOVAL
- PR CLASS D PATCH, 10"
- PR CLASS D, SPECIAL PATCH, 12"
- APPROACH SLAB REMOVAL

N

0 20 40 60

SCALE IN FEET

MODEL: Default
FILE NAME: c:\c3pw\jpw01.hornershifrin.com\HS TDOT\Documents\2305600A-PTB195-007_D1_Paul-Sac_Phil_SuiteCellInks\CAD_Sheets\D162K65_Sacramento\D162K65-sht-removal1-02

HORNER SHIFRIN
WWW. HORNERSHIFRIN .COM

USER NAME = ahernandez	DESIGNED -	REVISED -
	DRAWN -	REVISED -
PLOT SCALE = 40.0000 ' / in.	CHECKED -	REVISED -
PLOT DATE = 10/7/2025	DATE -	REVISED -

STATE OF ILLINOIS
DEPARTMENT OF TRANSPORTATION

SACRAMENTO BOULEVARD OVER FAI–290 (EISENHOWER EXPRESSWAY)
ROADWAY REMOVAL PLAN

SCALE: 1" = 20' | SHEET 2 OF 3 SHEETS | STA. | TO STA.

F.A.I. RTE.	SECTION	COUNTY	TOTAL SHEETS	SHEET NO.
290	2019-192-B-R	COOK	237	38
		CONTRACT NO. 62K65		
	ILLINOIS FED. AID PROJECT			

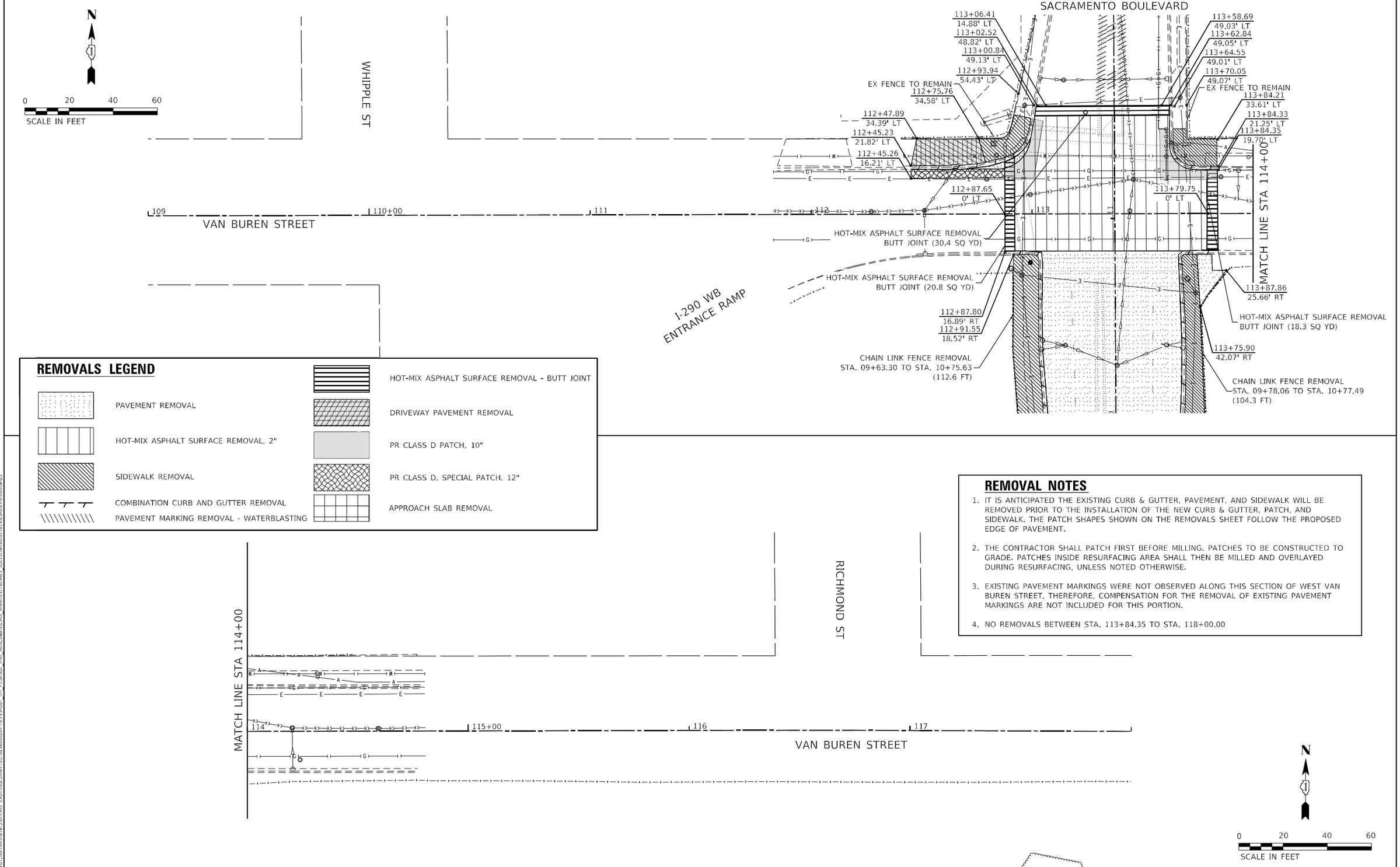

REMOVALS LEGEND

- PAVEMENT REMOVAL
- HOT-MIX ASPHALT SURFACE REMOVAL, 2"
- SIDEWALK REMOVAL
- COMBINATION CURB AND GUTTER REMOVAL
- PAVEMENT MARKING REMOVAL - WATERBLASTING
- HOT-MIX ASPHALT SURFACE REMOVAL - BUTT JOINT
- DRIVEWAY PAVEMENT REMOVAL
- PR CLASS D PATCH, 10"
- PR CLASS D, SPECIAL PATCH, 12"
- APPROACH SLAB REMOVAL

REMOVAL NOTES

1. IT IS ANTICIPATED THE EXISTING CURB & GUTTER, PAVEMENT, AND SIDEWALK WILL BE REMOVED PRIOR TO THE INSTALLATION OF THE NEW CURB & GUTTER, PATCH, AND SIDEWALK. THE PATCH SHAPES SHOWN ON THE REMOVALS SHEET FOLLOW THE PROPOSED EDGE OF PAVEMENT.
2. THE CONTRACTOR SHALL PATCH FIRST BEFORE MILLING. PATCHES TO BE CONSTRUCTED TO GRADE. PATCHES INSIDE RESURFACING AREA SHALL THEN BE MILLED AND OVERLAYED DURING RESURFACING, UNLESS NOTED OTHERWISE.
3. EXISTING PAVEMENT MARKINGS WERE NOT OBSERVED ALONG THIS SECTION OF WEST VAN BUREN STREET. THEREFORE, COMPENSATION FOR THE REMOVAL OF EXISTING PAVEMENT MARKINGS ARE NOT INCLUDED FOR THIS PORTION.
4. NO REMOVALS BETWEEN STA. 113+84.35 TO STA. 118+00.00

MODEL: Default
FILE NAME: p:\x\PW0\hornershifrin.com\HS IDOT\Documents\230560000-PTB195-007 D1 Pt.ul-Sur_Plt Sus-Collins\CAD Sheets\D162K65_Sacramento\D162K65-sht-removal03

HORNER SHIFRIN
WWW.HORNERSHIFRIN.COM

USER NAME = ahernandez	DESIGNED -	REVISED -
	DRAWN -	REVISED -
PLOT SCALE = 40.0000 ' / in.	CHECKED -	REVISED -
PLOT DATE = 10/7/2025	DATE -	REVISED -

STATE OF ILLINOIS
DEPARTMENT OF TRANSPORTATION

SACRAMENTO BOULEVARD OVER FAI-290 (EISENHOWER EXPRESSWAY)
ROADWAY REMOVAL PLAN

SCALE: 1" = 20' | SHEET 3 OF 3 SHEETS | STA. | TO STA.

F.A.I. RTE.	SECTION	COUNTY	TOTAL SHEETS	SHEET NO.
290	2019-192-B-R	COOK	237	39
		CONTRACT NO. 62K65		
		ILLINOIS	FED. AID PROJECT	

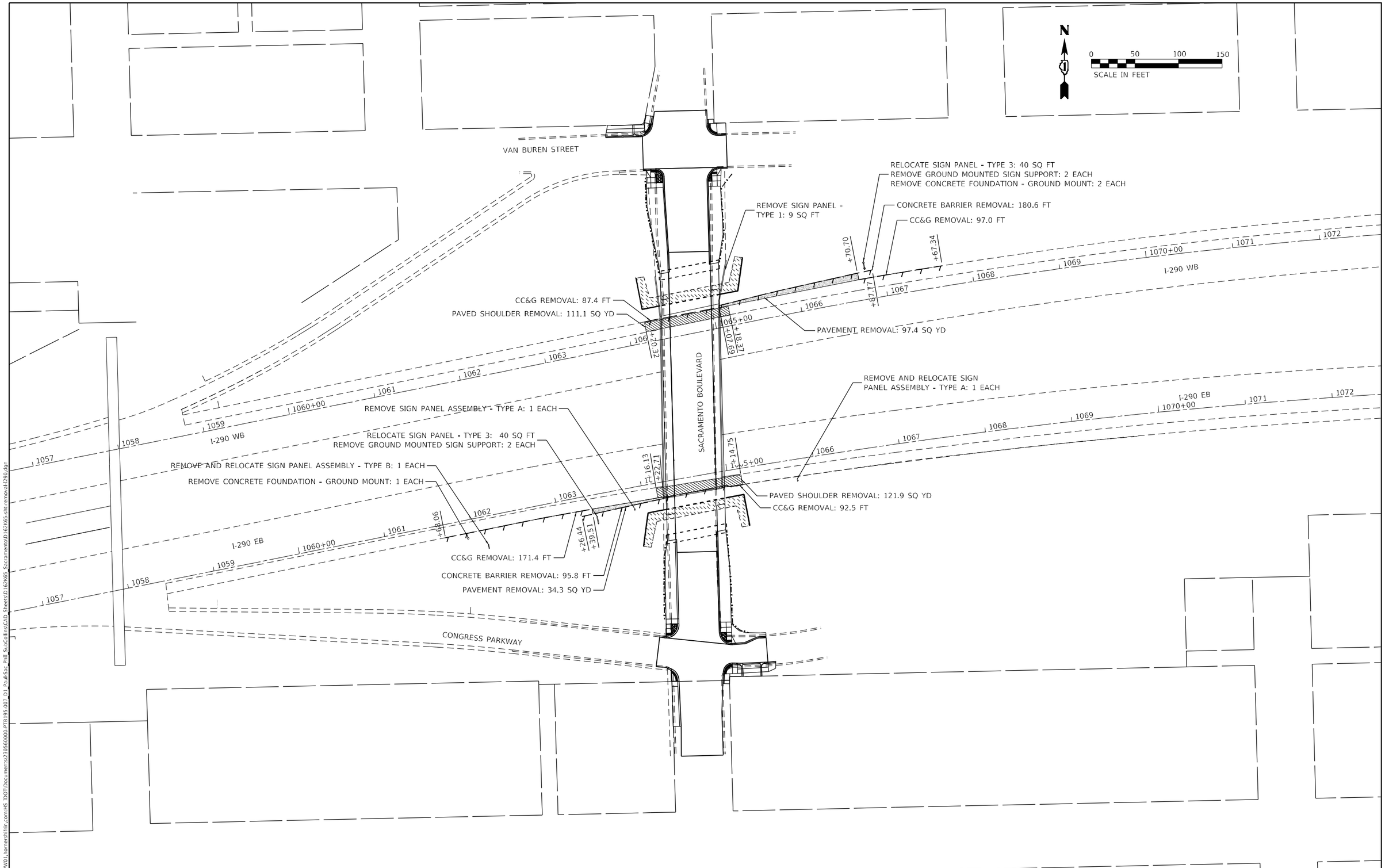

HORNER SHIFRIN WWW.HORNERSHIFRIN.COM	USER NAME = nfcapriotti	DESIGNED -	REVISED -	STATE OF ILLINOIS DEPARTMENT OF TRANSPORTATION	FAI–290 (EISENHOWER EXPRESSWAY) ROADWAY REMOVAL PLAN	F.A.I. RTE. 290	SECTION 2019-192-B-R	COUNTY COOK	TOTAL SHEETS 237 / SHEET NO. 40
		DRAWN -	REVISED -					CONTRACT NO. 62K65	
	PLOT SCALE = 100.0000 ' / in.	CHECKED -	REVISED -		SCALE: 1"=50' / SHEET 1 OF 1 SHEETS / STA. TO STA.		ILLINOIS	FED. AID PROJECT	
	PLOT DATE = 10/7/2025	DATE -	REVISED -						

MODEL: Default
FILE NAME: pw:\\PW01.hornershifrin.com:HS IDOT\Documents\230560000-PTB195-007_D1_Paul-Sac_Phil_SubCollins\CAD_Sheets\D162K65_Sacramento\D162K65-sht-removal4290.dgn

PROPOSED LEGEND

RECONSTRUCTION
- POLYMERIZED HMA SURFACE COURSE, IL-9.5, MIX "E", N70, 2"
- HOT-MIX ASPHALT BASE COURSE, 8"
- AGGREGATE SUBGRADE IMPROVEMENT, 12"
- GEOTECHNICAL FABRIC FOR GROUND STABILIZATION

HMA SURF REM 2"
P HMA SC IL-9.5 E N70, 2"

PCC DRIVEWAY PAVT 8

CONC MEDIAN SURF 6

PC CONC SIDEWALK

NOTES

1. REFER TO DISTRICT DETAIL, BD-32, FOR HMA TRANSITIONS AT THE PROJECT LIMITS ALONG SACRAMENTO BLVD AND SIDE ROADS.
2. ROADWAY DIMENSIONS ARE FROM FACE OF CURB TO FACE OF CURB.
3. SEE ADA SHEETS FOR SIDEWALK THICKNESSES.

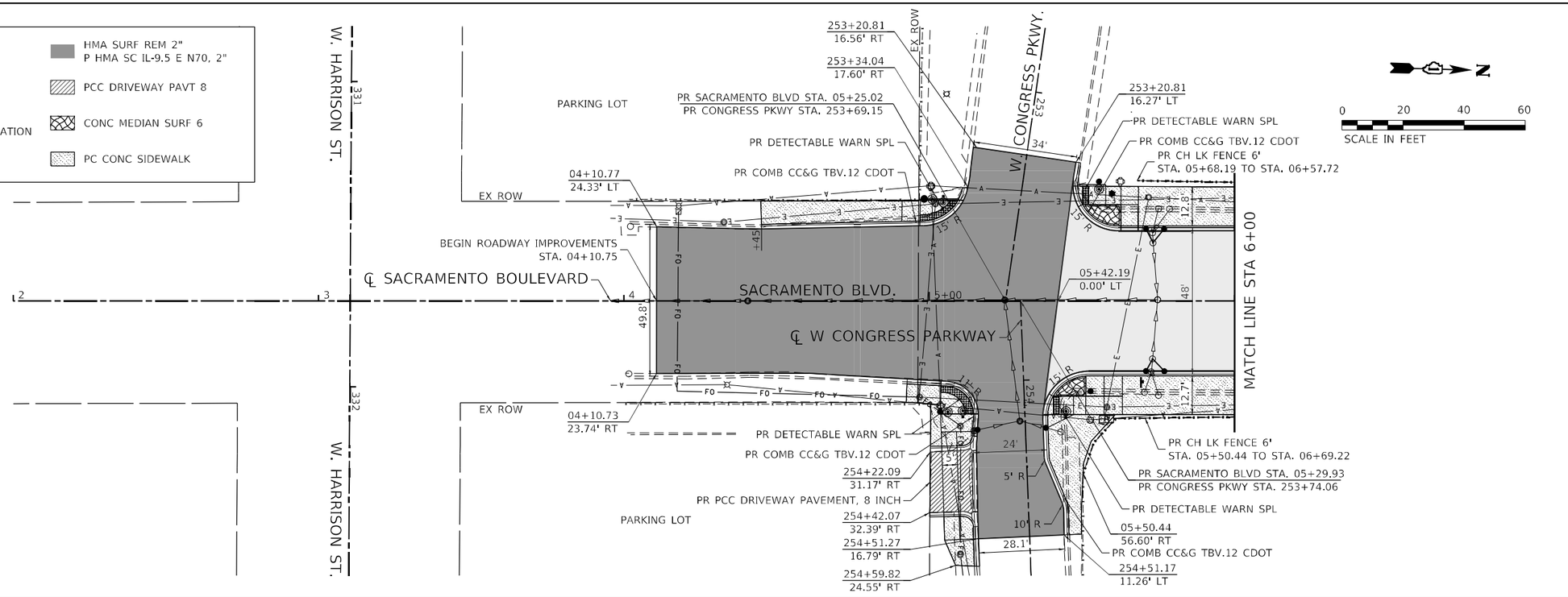

PLAN
NOTE BOOK NO.
SURVEYED
PLOTTED
ALIGNMENT CHECKED
R/W OF WAY CHECKED
CADD FILE NAME
BY
DATE

PROFILE
NOTE BOOK NO.
SURVEYED
PLOTTED
GRADES CHECKED
B.M. NOTED
STRUCTURE NOTATIONS CHKD
BY
DATE

MODEL: Default
FILE NAME: pw:\\PW01.hornershifrin.com:HS IDOT\Documents\230560000-PTB195-007_D1_Paul-Sac_Phil_SubCollins\CAD_Sheets\D162K65_Sacramento\D162K65-sht-plnprf-01.dgn

HORNER SHIFRIN
WWW.HORNERSHIFRIN.COM

USER NAME = krkubalanza	DESIGNED -	REVISED -	
	DRAWN -	REVISED -	
PLOT SCALE = 40.0000 ' / in.	CHECKED -	REVISED -	
PLOT DATE = 10/7/2025	DATE -	REVISED -	

STATE OF ILLINOIS
DEPARTMENT OF TRANSPORTATION

SACRAMENTO BOULEVARD OVER FAI-290 (EISENHOWER EXPRESSWAY)
PLAN AND PROFILE

SCALE: 1" = 20" | SHEET 1 OF 3 SHEETS | STA. TO STA.

F.A.I. RTE.	SECTION	COUNTY	TOTAL SHEETS	SHEET NO.
290	2019-192-B-R	COOK	237	41
		CONTRACT NO. 62K65		
		ILLINOIS	FED. AID PROJECT	

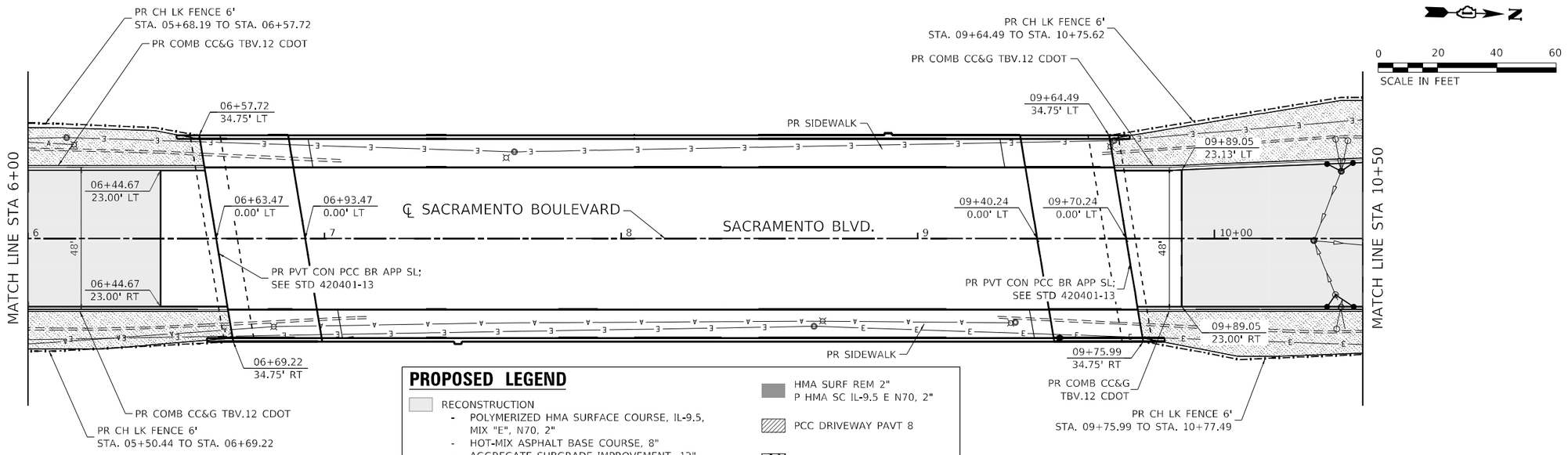

NOTES

1. REFER TO DISTRICT DETAIL, BD-32, FOR HMA TRANSITIONS AT THE PROJECT LIMITS ALONG SACRAMENTO BLVD AND SIDE ROADS.
2. ROADWAY DIMENSIONS ARE FROM FACE OF CURB TO FACE OF CURB.
3. SEE ADA SHEETS FOR SIDEWALK THICKNESSES.

PROPOSED LEGEND

RECONSTRUCTION
- POLYMERIZED HMA SURFACE COURSE, IL-9.5, MIX "E", N70, 2"
- HOT-MIX ASPHALT BASE COURSE, 8"
- AGGREGATE SUBGRADE IMPROVEMENT, 12"
- GEOTECHNICAL FABRIC FOR GROUND STABILIZATION

HMA SURF REM 2"
P HMA SC IL-9.5 E N70, 2"

PCC DRIVEWAY PAVT 8

CONC MEDIAN SURF 6

PC CONC SIDEWALK

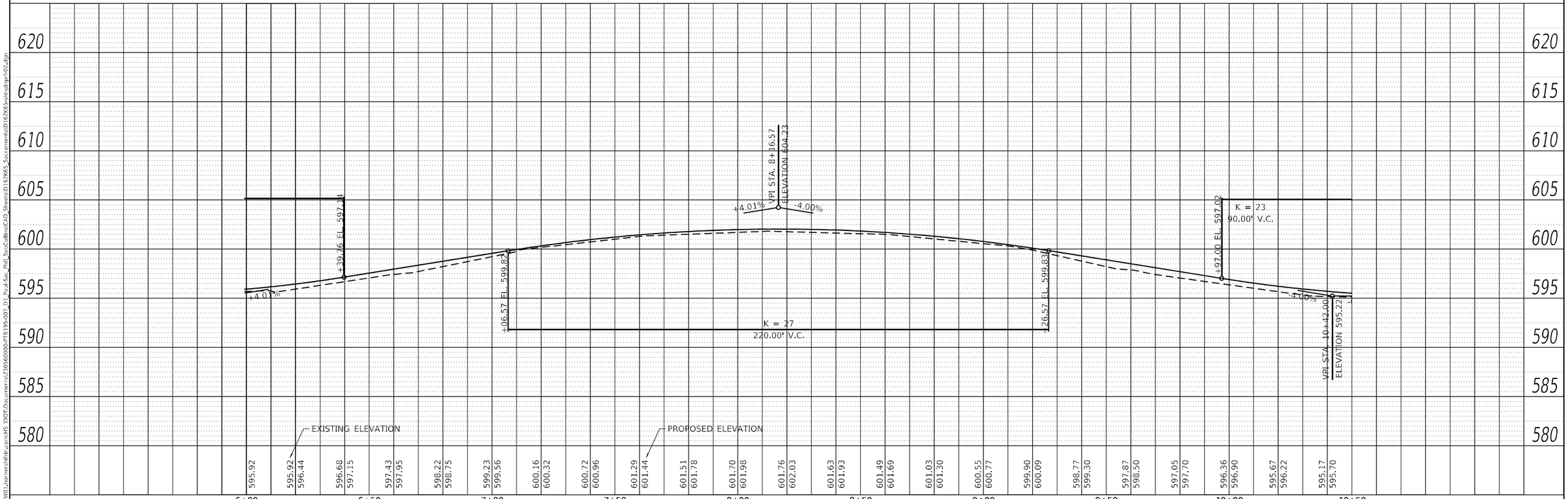

HORNER SHIFRIN WWW.HORNERSHIFRIN.COM	USER NAME = krkubalanza	DESIGNED -	REVISED -	STATE OF ILLINOIS DEPARTMENT OF TRANSPORTATION	SACRAMENTO BOULEVARD OVER FAI-290 (EISENHOWER EXPRESSWAY) PLAN AND PROFILE
		DRAWN -	REVISED -		
	PLOT SCALE = 40.0000 ' / in.	CHECKED -	REVISED -		
	PLOT DATE = 10/7/2025	DATE -	REVISED -		SCALE: 1" = 20' SHEET 2 OF 3 SHEETS STA. TO STA.

F.A.I. RTE.	SECTION	COUNTY	TOTAL SHEETS	SHEET NO.
290	2019-192-B-R	COOK	237	42
		CONTRACT NO. 62K65		
		ILLINOIS FED. AID PROJECT		

PLAN: SURVEYED / PLOTTED / ALIGNMENT CHECKED / R.O.W. CHECKED / CADD FILE NAME / NOTE BOOK NO. / BY / DATE

PROFILE: SURVEYED / PLOTTED / GRADES CHECKED / B.M. NOTED / STRUCTURE NOTATIONS CHKD / NOTE BOOK NO. / BY / DATE

MODEL: Default
FILE NAME: pw:\\PW01.hornershifrin.com:HS IDOT\Documents\230560000-PTB195-007_D1_Paul-Sac_Phil_SubCollins\CAD_Sheets\D162K65_Sacramento\D162K65-sht-plnprf-02.dgn

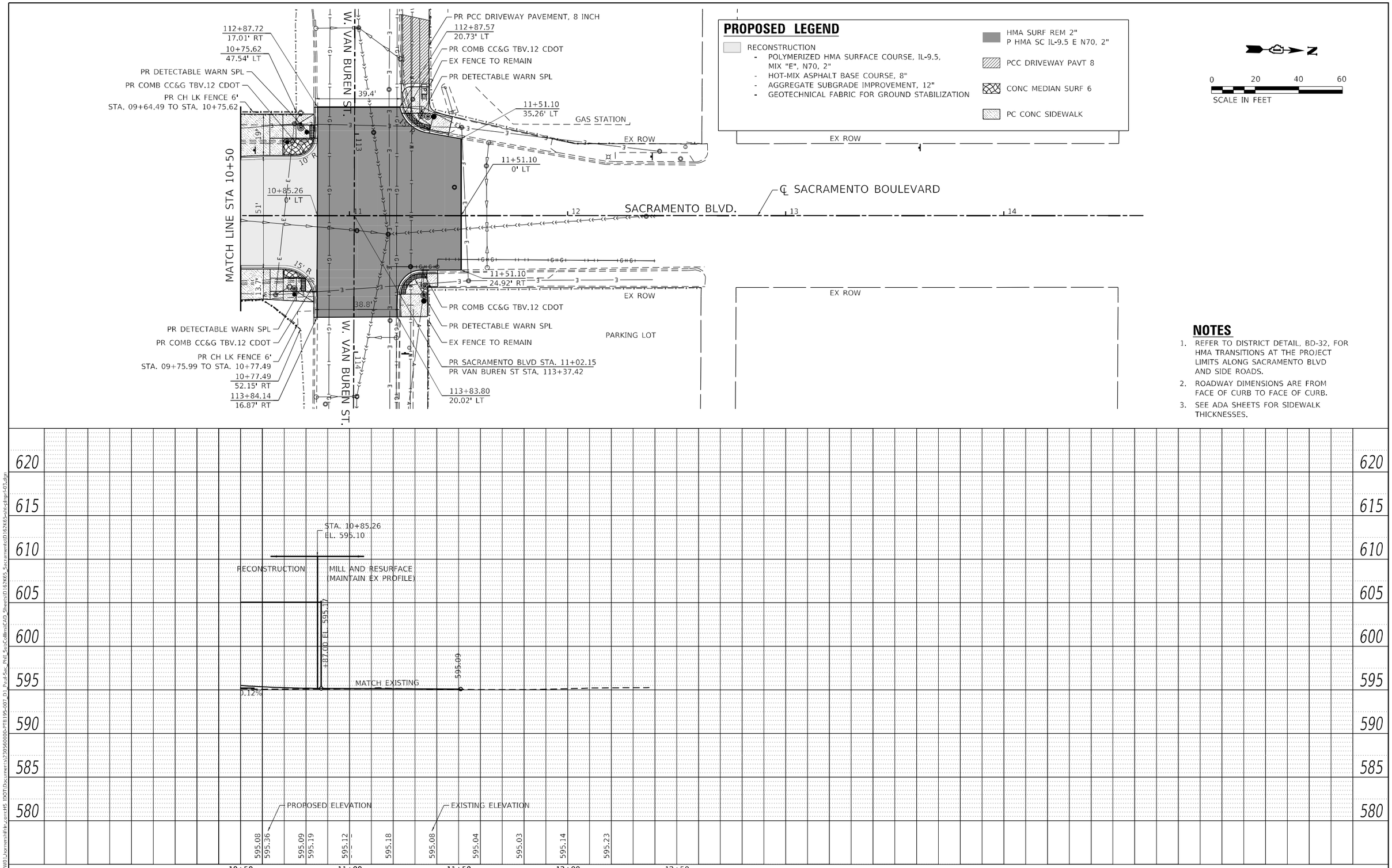

NOTES

1. REFER TO DISTRICT DETAIL, BD-32, FOR HMA TRANSITIONS AT THE PROJECT LIMITS ALONG SACRAMENTO BLVD AND SIDE ROADS.
2. ROADWAY DIMENSIONS ARE FROM FACE OF CURB TO FACE OF CURB.
3. SEE ADA SHEETS FOR SIDEWALK THICKNESSES.

PLAN — NOTE BOOK NO. — SURVEYED — PLOTTED — ALIGNMENT CHECKED — RT. OF WAY CHECKED — CADD FILE NAME — BY — DATE

PROFILE — NOTE BOOK NO. — SURVEYED — PLOTTED — GRADES CHECKED — B.M. NOTED — STRUCTURE NOTATIONS CHKD — BY — DATE

MODEL: Default
FILE NAME: pw:\\PW01.hornershifrin.com:HS IDOT\Documents\230560000-PTB195-007_D1_Paul-Sac_Phil_SubCollins\CAD_Sheets\D162K65_Sacramento\D162K65-sht-plnprf-03.dgn

HORNER SHIFRIN
WWW.HORNERSHIFRIN.COM

USER NAME = krkubalanza	DESIGNED -	REVISED -	
	DRAWN -	REVISED -	
PLOT SCALE = 40.0000 ' / in.	CHECKED -	REVISED -	
PLOT DATE = 10/7/2025	DATE -	REVISED -	

STATE OF ILLINOIS
DEPARTMENT OF TRANSPORTATION

SACRAMENTO BOULEVARD OVER FAI-290 (EISENHOWER EXPRESSWAY)
PLAN AND PROFILE

SCALE: 1" = 20' | SHEET 3 OF 3 SHEETS | STA. TO STA.

F.A.I. RTE.	SECTION	COUNTY	TOTAL SHEETS	SHEET NO.
290	2019-192-B-R	COOK	237	43
		CONTRACT NO. 62K65		
		ILLINOIS	FED. AID PROJECT	

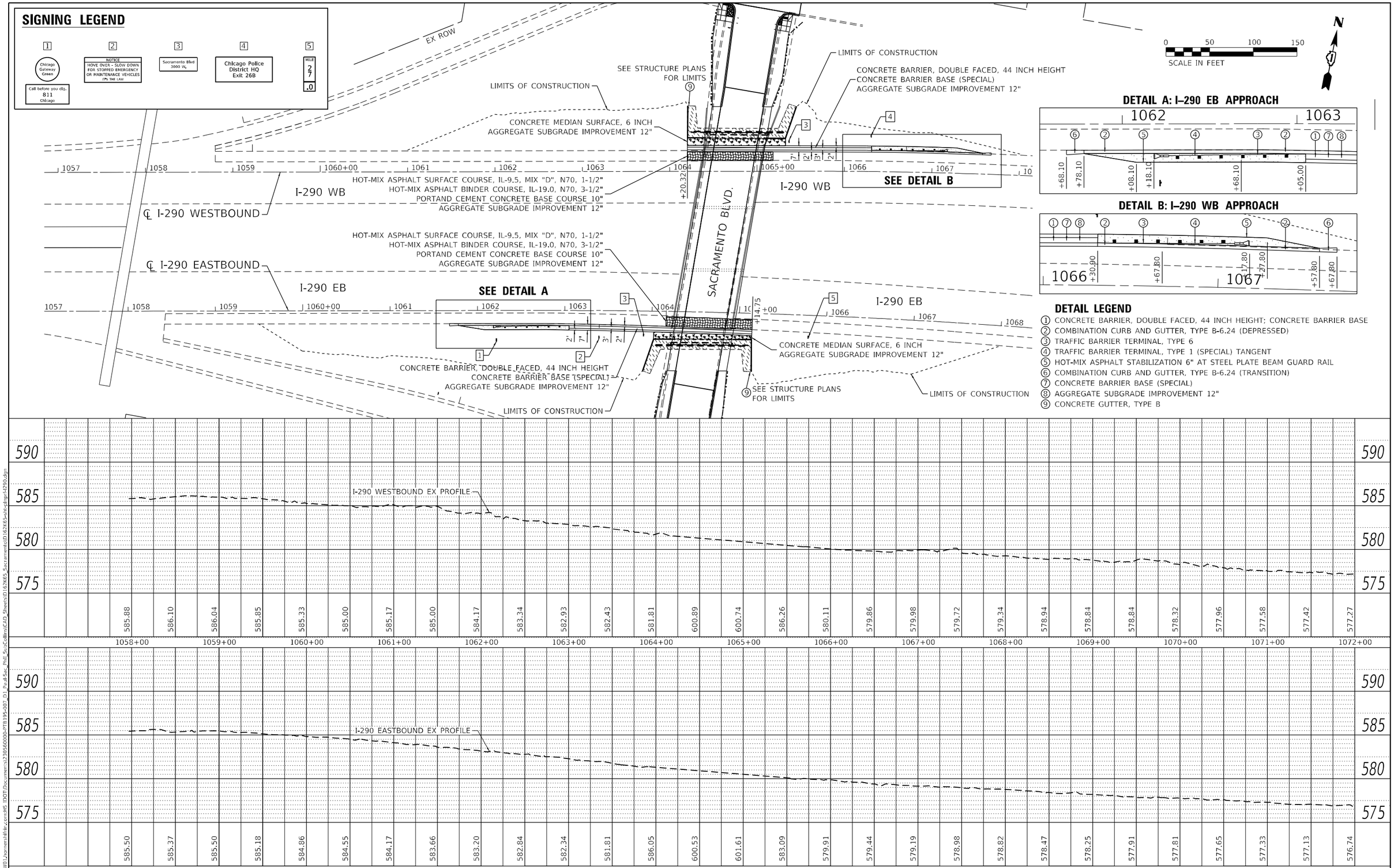

PLAN — NOTE BOOK NO. — SURVEYED — PLOTTED — ALIGNMENT CHECKED — R.O.W. CHECKED — CADD FILE NAME — BY — DATE

PROFILE — NOTE BOOK NO. — SURVEYED — PLOTTED — GRADES CHECKED — B.M. NOTED — STRUCTURE NOTATIONS CHKD — BY — DATE

MODEL: Default
FILE NAME: pw:\\PW01.hornershifrin.com:HS IDOT\Documents\230560000-PTB195-007_D1_Paul-Sac_Phil_SubCollins\CAD_Sheets\D162K65_Sacramento\D162K65-sht-plnprf-i290.dgn

HORNER SHIFRIN
WWW.HORNERSHIFRIN.COM

USER NAME = rocampo	DESIGNED -	REVISED -	
	CHECKED -	REVISED -	
PLOT SCALE = 100.0000 ' / in.	DRAWN -	REVISED -	
PLOT DATE = 10/14/2025	CHECKED -	REVISED -	

STATE OF ILLINOIS
DEPARTMENT OF TRANSPORTATION

FAI-290 (EISENHOWER EXPRESSWAY)
PLAN AND DOUBLE PROFILE

SCALE: 1"=50' | SHEET 1 OF 1 SHEETS | STA. TO STA.

F.A.I. RTE.	SECTION	COUNTY	TOTAL SHEETS	SHEET NO.
290	2019-192-B-R	COOK	237	44

CONTRACT NO. 62K65

ILLINOIS FED. AID PROJECT

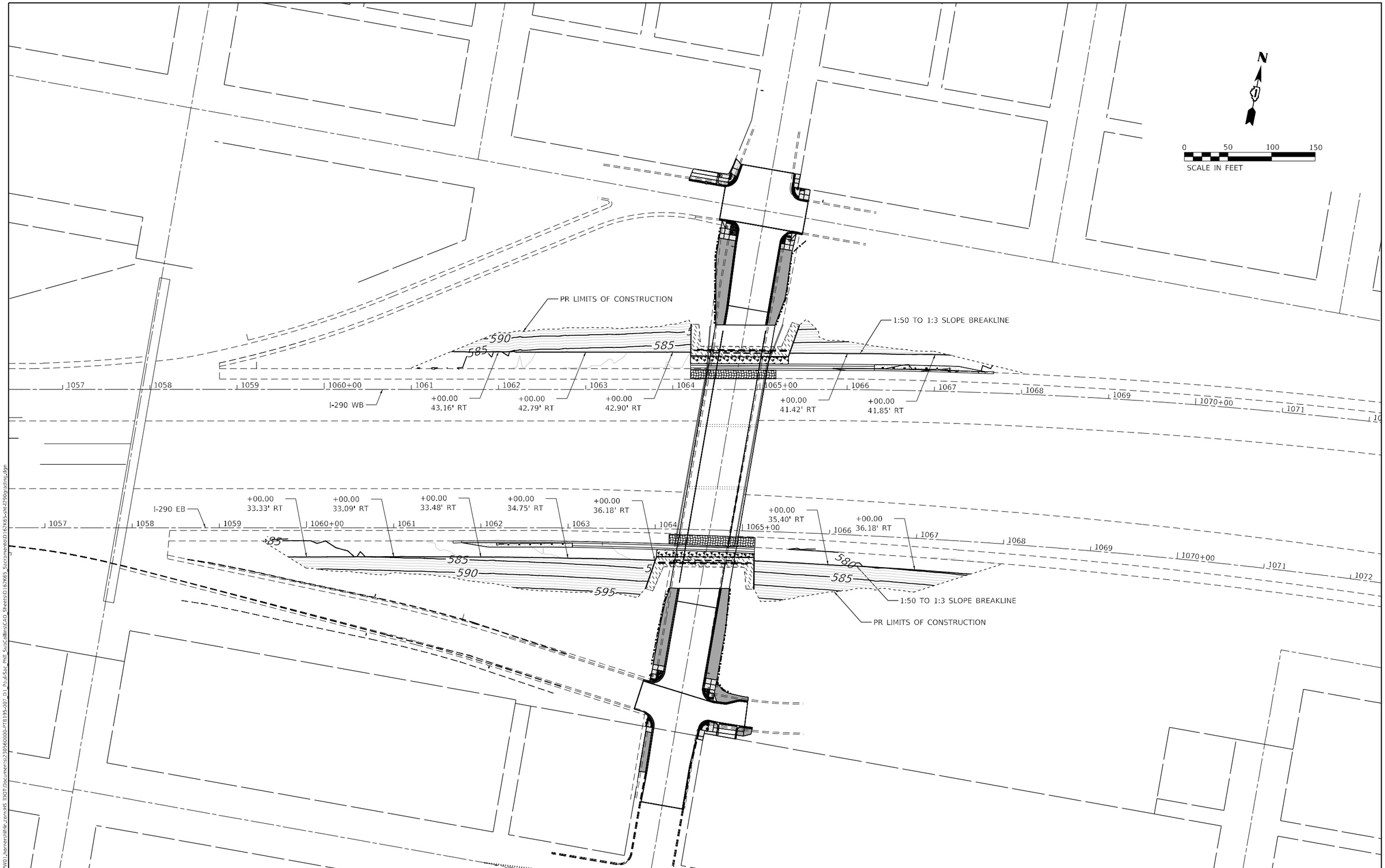

MODEL: Default
FILE NAME: pw:\\PW01.hornershifrin.com:HS IDOT\Documents\230560000-PTB195-007_D1_Paul-Sac_Phil_SubCollins\CAD_Sheets\D162K65_Sacramento\D162K65-sht-I290grading.dgn

HORNER SHIFRIN WWW.HORNERSHIFRIN.COM	USER NAME = bctimmermann	DESIGNED -	REVISED -
		DRAWN -	REVISED -
	PLOT SCALE = 100.0000 ' / in.	CHECKED -	REVISED -
	PLOT DATE = 9/11/2025	DATE -	REVISED -

STATE OF ILLINOIS
DEPARTMENT OF TRANSPORTATION

FAI–290 (EISENHOWER EXPRESSWAY) AT SACRAMENTO BOULEVARD
GRADING PLAN

SCALE: 1' = 50' | SHEET 1 OF 1 SHEETS | STA. TO STA.

F.A.P RTE.	SECTION	COUNTY	TOTAL SHEETS	SHEET NO.
290	2019-192-B-R	COOK	237	45
		CONTRACT NO. 62K65		
		ILLINOIS	FED. AID PROJECT	

LEGEND

(XXX.XX)	EXISTING ELEVATION
	DETECTABLE WARNING
	DEPRESSED CURB AND GUTTER
	PC CONC SIDEWALK 5 SUB GRAN MAT B 4
	PC CONC SIDEWALK 8 SUB GRAN MAT B 4
	CONC MEDIAN SURF 6 SUB GRAN MAT B 4

NOTE

THE PARTIAL TRAFFIC SIGNAL EQUIPMENT DISPLAYED ON THESE SHEETS ARE APPROXIMATE AND FOR REFERENCE ONLY. PLEASE REFER TO THE TRAFFIC SIGNAL SHEETS FOR MORE INFORMATION.

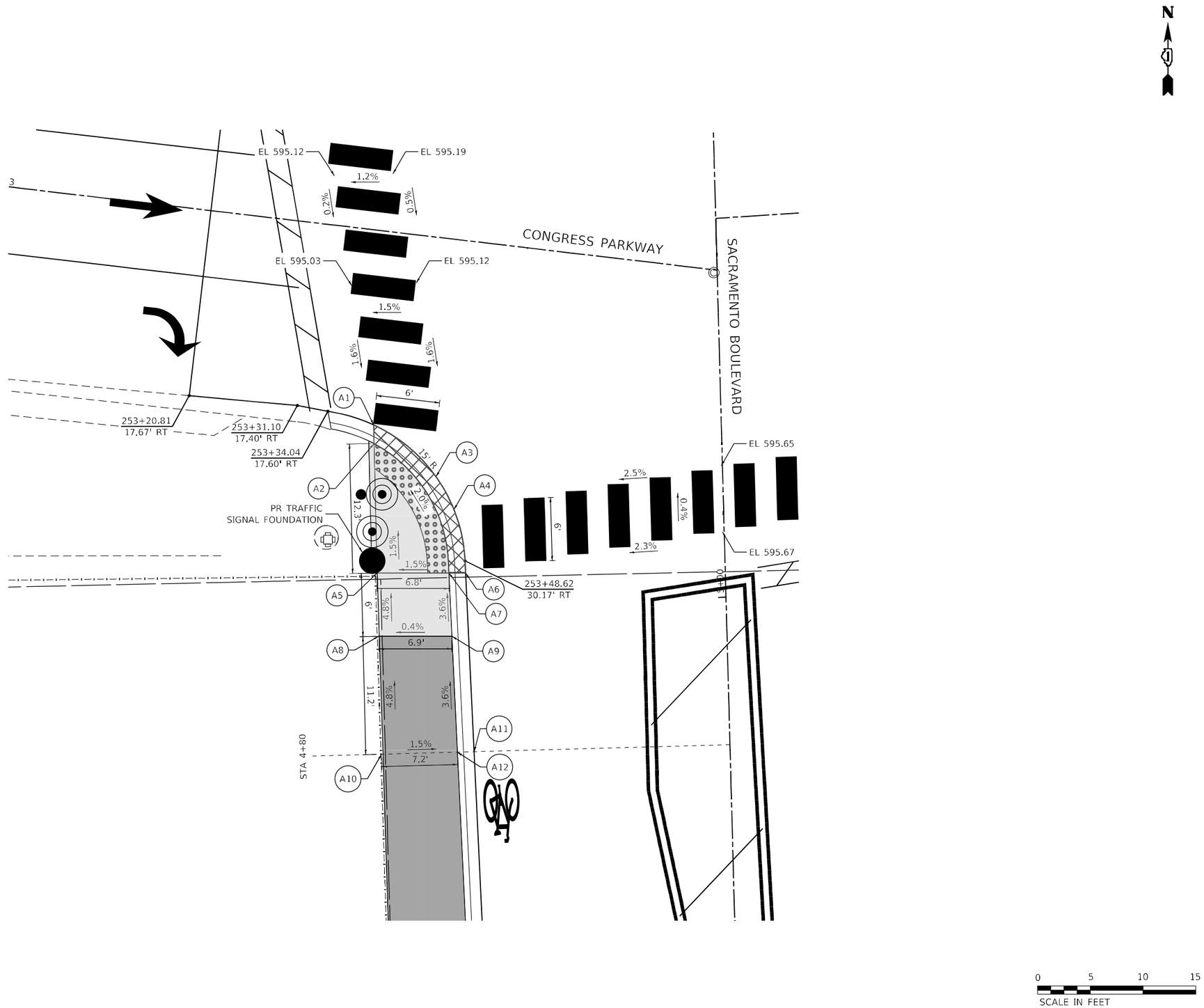

CONGRESS PARKWAY [SOUTHWEST]

POINT	STATION	OFFSET (LT/RT)	ELEVATION
A1	253+38.50	18.37 RT	(594.81)
A2	253+38.75	20.14 RT	594.80
A3	253+44.96	22.56 RT	(594.93)
A4	253+47.00	25.46 RT	(595.00)
A5	253+40.48	32.27 RT	594.99
A6	253+48.81	31.30 RT	(595.10)
A7	253+47.23	31.48 RT	595.09
A8	253+41.32	38.21 RT	595.28
A9	253+48.22	37.40 RT	595.31
A10	253+42.90	49.30 RT	595.82
A11	253+51.59	48.04 RT	595.27
A12	253+50.02	48.26 RT	595.71

MODEL: Default
FILE NAME: pw:\\PW01.hornershifrin.com:HS IDOT\Documents\230560000-PTB195-007_D1_Paul-Sac_Phil_SubCollins\CAD_Sheets\D162K65_Sacramento\D162K65-sht-ada-01.dgn

HORNER SHIFRIN
WWW.HORNERSHIFRIN.COM

USER NAME = krkubalanza	DESIGNED -	REVISED -	
	DRAWN -	REVISED -	
PLOT SCALE = 10.0000 ' / in.	CHECKED -	REVISED -	
PLOT DATE = 10/7/2025	DATE -	REVISED -	

STATE OF ILLINOIS
DEPARTMENT OF TRANSPORTATION

SACRAMENTO BOULEVARD AT CONGRESS PARKWAY
ADA DETAILS

SCALE: 1" = 5' | SHEET 1 OF 8 SHEETS | STA. TO STA.

F.A.I. RTE.	SECTION	COUNTY	TOTAL SHEETS	SHEET NO.
290	2019-192-B-R	COOK	237	46
		CONTRACT NO. 62K65		
		ILLINOIS	FED. AID PROJECT	

LEGEND

(XXX.XX) EXISTING ELEVATION

DETECTABLE WARNING

DEPRESSED CURB AND GUTTER

PC CONC SIDEWALK 5
SUB GRAN MAT B 4

PC CONC SIDEWALK 8
SUB GRAN MAT B 4

CONC MEDIAN SURF 6
SUB GRAN MAT B 4

NOTE

THE PARTIAL TRAFFIC SIGNAL EQUIPMENT DISPLAYED ON THESE SHEETS ARE APPROXIMATE AND FOR REFERENCE ONLY. PLEASE REFER TO THE TRAFFIC SIGNAL SHEETS FOR MORE INFORMATION.

CONGRESS PARKWAY [SOUTHEAST]

POINT	STATION	OFFSET (LT/RT)	ELEVATION
B1	253+98.37	36.06 RT	(595.04)
B2	254+06.02	36.69 RT	(595.58)
B3	253+99.94	36.20 RT	595.49
B4	254+00.34	32.23 RT	595.43
B5	254+06.41	32.72 RT	595.52
B6	253+99.26	27.02 RT	(595.01)
B7	254+00.84	27.10 RT	595.00
B8	254+00.83	20.75 RT	(594.96)
B9	254+04.51	16.88 RT	(594.92)
B10	254+07.00	27.43 RT	595.03
B11	254+10.07	27.52 RT	595.04
B12	254+10.54	15.17 RT	(594.89)
B13	254+10.48	16.76 RT	594.88
B14	254+16.20	17.31 RT	594.95
B15	254+20.67	22.62 RT	595.07
B16	254+16.05	22.59 RT	595.02
B17	254+15.91	27.59 RT	595.09
B18	254+22.48	16.23 RT	(594.81)
B19	254+22.45	17.81 RT	594.80
B20	254+22.25	22.63 RT	595.08
B21	254+22.16	27.63 RT	595.16
B22	254+20.58	27.62 RT	595.15
B23	254+22.09	31.17 RT	(595.43)
B24	254+42.44	16.61 RT	(594.91)
B25	254+42.41	18.19 RT	594.90
B26	254+42.25	22.77 RT	595.25
B27	254+43.84	22.78 RT	595.24
B28	254+51.41	22.84 RT	595.31
B29	254+43.74	27.78 RT	595.31
B30	254+42.16	27.77 RT	595.32
B31	254+42.07	32.39 RT	(595.59)
B32	254+51.38	18.37 RT	595.24
B33	254+51.44	27.84 RT	595.38
B34	254+60.36	18.38 RT	(595.34)
B35	254+59.82	24.55 RT	(595.48)
B36	254+03.99	34.14 RT	595.46
B37	254+16.04	16.10 RT	594.77
B38	254+56.06	22.92 RT	595.35
B39	254+47.34	18.29' RT	595.09

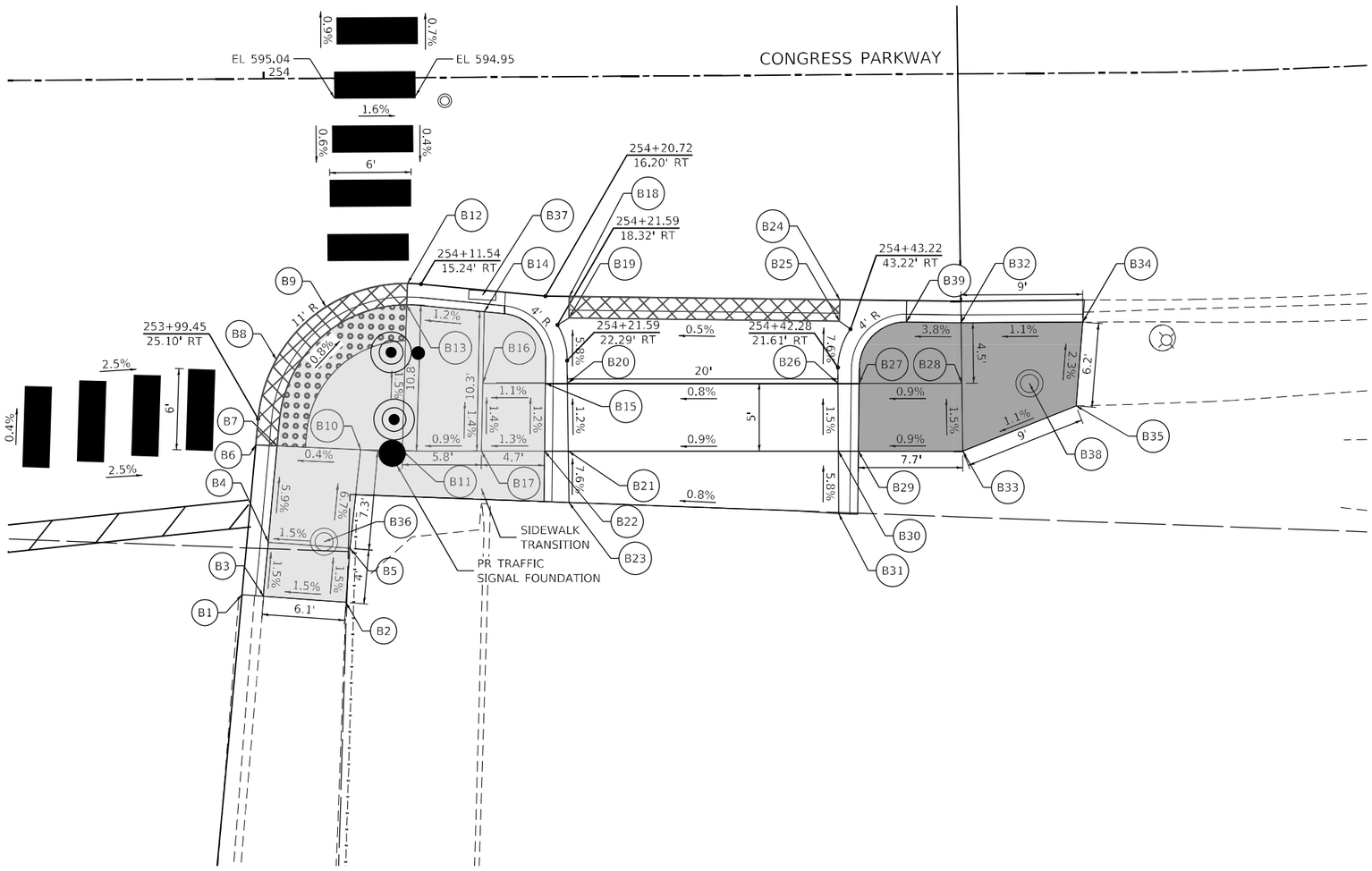

HORNER SHIFRIN WWW. HORNERSHIFRIN .COM	USER NAME = krkubalanza	DESIGNED -	REVISED -
		DRAWN -	REVISED -
	PLOT SCALE = 10.0000 ' / in.	CHECKED -	REVISED -
	PLOT DATE = 10/7/2025	DATE -	REVISED -

STATE OF ILLINOIS
DEPARTMENT OF TRANSPORTATION

SACRAMENTO BOULEVARD AT CONGRESS PARKWAY
ADA DETAILS

SCALE: 1" = 5' | SHEET 2 OF 8 SHEETS | STA. | TO STA.

F.A.I. RTE.	SECTION	COUNTY	TOTAL SHEETS	SHEET NO.
290	2019-192-B-R	COOK	237	47
		CONTRACT NO. 62K65		
		ILLINOIS	FED. AID PROJECT	

MODEL: Default
FILE NAME: pw:\\PW01.HornerShifrin.com:HS IDOT\Documents\230560000-PTB195-007_01_Pul-Sac_Pkg_Sus-Collins\CAD Sheets\D162K65_Sacramento\D162K65-alt-adt-02.dgn

LEGEND

(XXX.XX)	EXISTING ELEVATION
	DETECTABLE WARNING
	DEPRESSED CURB AND GUTTER
	PC CONC SIDEWALK 5 SUB GRAN MAT B 4
	PC CONC SIDEWALK 8 SUB GRAN MAT B 4
	CONC MEDIAN SURF 6 SUB GRAN MAT B 4

NOTE

THE PARTIAL TRAFFIC SIGNAL EQUIPMENT DISPLAYED ON THESE SHEETS ARE APPROXIMATE AND FOR REFERENCE ONLY. PLEASE REFER TO THE TRAFFIC SIGNAL SHEETS FOR MORE INFORMATION.

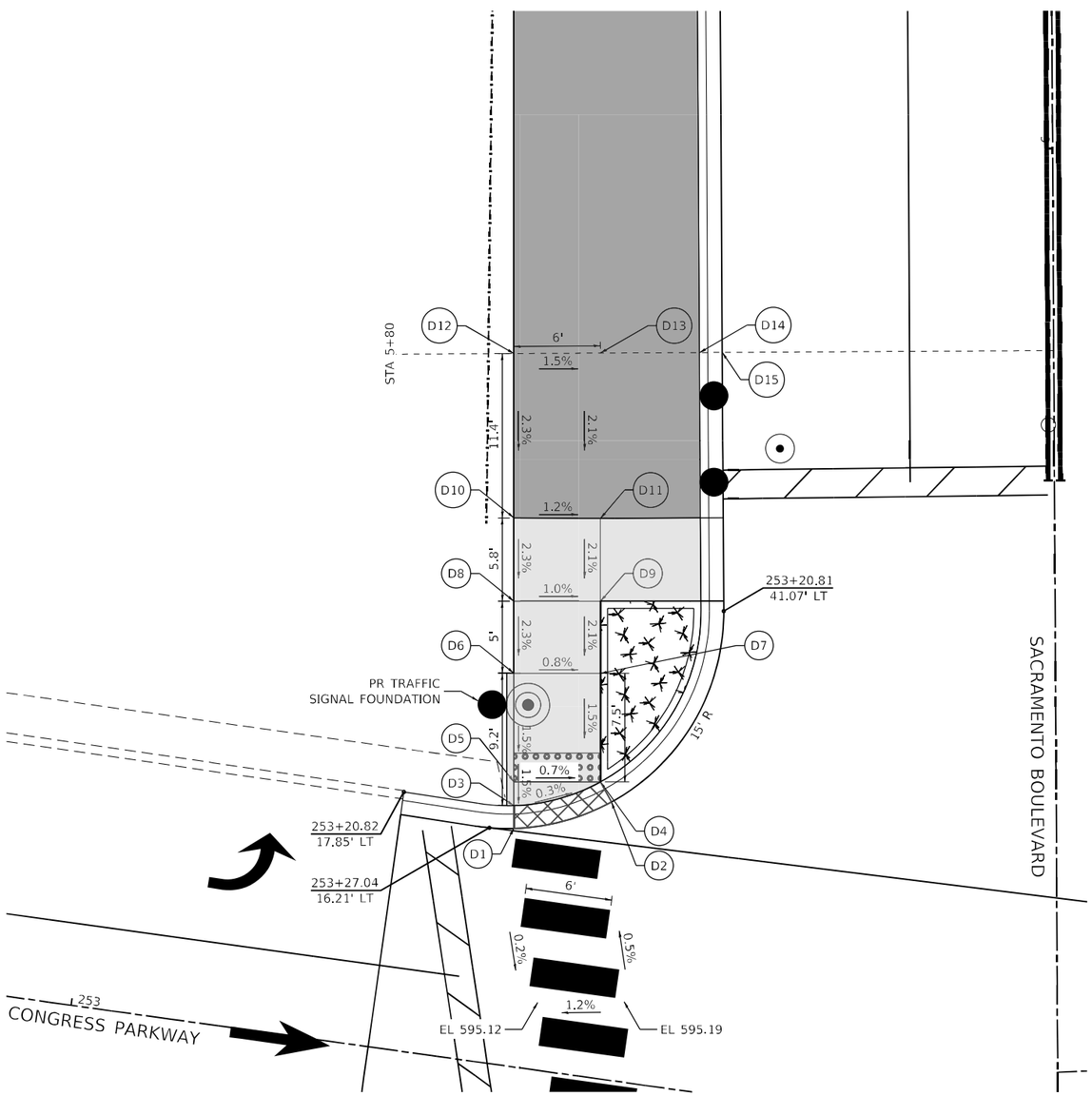

CONGRESS PARKWAY [NORTHWEST]

POINT	STATION	OFFSET (LT/RT)	ELEVATION
D1	253+28.74	16.39 LT	(595.14)
D2	253+35.18	19.15 LT	(595.12)
D3	253+28.52	17.96 LT	595.13
D4	253+34.23	20.42 LT	595.11
D5	253+28.29	19.56 LT	595.15
D6	253+27.32	27.05 LT	595.27
D7	253+33.19	27.88 LT	595.22
D8	253+26.56	32.00 LT	595.38
D9	253+32.50	32.83 LT	595.32
D10	253+25.76	37.73 LT	595.51
D11	253+31.70	38.53 LT	595.44
D12	253+24.18	49.03 LT	595.77
D13	253+30.12	49.89 LT	595.68
D14	253+36.92	50.87 LT	595.58
D15	253+38.49	51.11 LT	595.14

0 5 10 15
SCALE IN FEET

MODEL: Default
FILE NAME: pw:\\PW01.hornershifrin.com:HS IDOT\Documents\2305600\0-PTB 195-007 D1 Pt.1-Sac_Phil Sus Collins\CAD Sheets\D162K65_Sacramento\D162K65-sht-ada-03.dgn

HORNER SHIFRIN
WWW. HORNERSHIFRIN .COM

USER NAME = krkubalanza	DESIGNED -	REVISED -
	DRAWN -	REVISED -
PLOT SCALE = 10.0000 ' / in.	CHECKED -	REVISED -
PLOT DATE = 10/7/2025	DATE -	REVISED -

STATE OF ILLINOIS
DEPARTMENT OF TRANSPORTATION

SACRAMENTO BOULEVARD AT CONGRESS PARKWAY
ADA DETAILS

SCALE: 1" = 5' | SHEET 3 OF 8 SHEETS | STA. | TO STA.

F.A.I. RTE.	SECTION	COUNTY	TOTAL SHEETS	SHEET NO.
290	2019-192-B-R	COOK	237	48
		CONTRACT NO. 62K65		
		ILLINOIS	FED. AID PROJECT	

LEGEND

(XXX.XX) EXISTING ELEVATION

DETECTABLE WARNING

DEPRESSED CURB AND GUTTER

PC CONC SIDEWALK 5
SUB GRAN MAT B 4

PC CONC SIDEWALK 8
SUB GRAN MAT B 4

CONC MEDIAN SURF 6
SUB GRAN MAT B 4

NOTE

THE PARTIAL TRAFFIC SIGNAL EQUIPMENT DISPLAYED ON THESE SHEETS ARE APPROXIMATE AND FOR REFERENCE ONLY. PLEASE REFER TO THE TRAFFIC SIGNAL SHEETS FOR MORE INFORMATION.

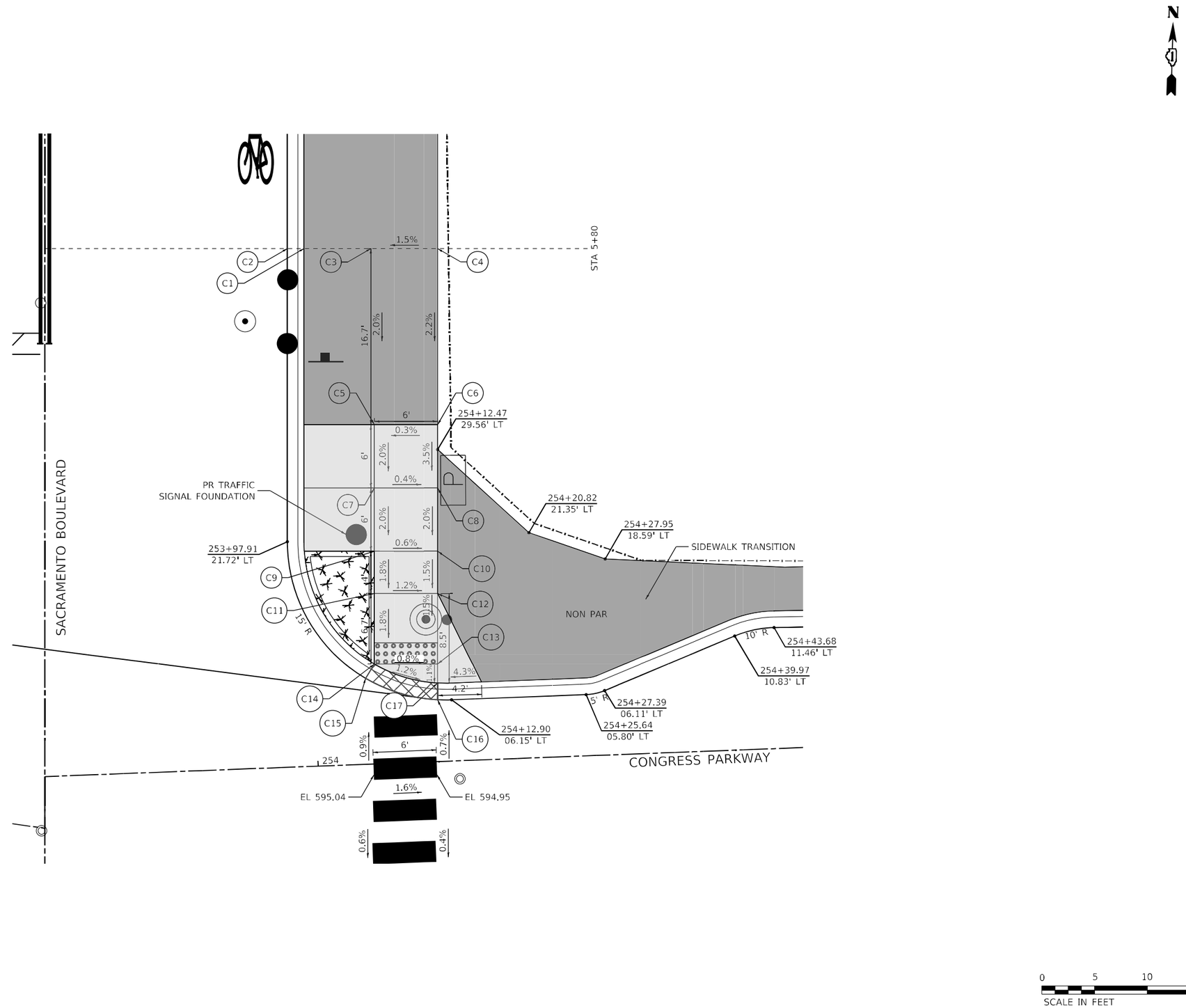

CONGRESS PARKWAY [NORTHEAST]

POINT	STATION	OFFSET (LT/RT)	ELEVATION
C1	254+00.54	49.09 LT	595.58
C2	253+98.96	49.15 LT	595.14
C3	254+06.20	48.87 LT	595.71
C4	254+13.20	48.60 LT	595.77
C5	254+05.56	32.18 LT	595.38
C6	254+12.56	31.91 LT	595.40
C7	254+05.33	26.18 LT	595.26
C8	254+12.33	25.91 LT	595.19
C9	254+05.10	20.19 LT	595.14
C10	254+12.10	19.92 LT	595.06
C11	254+04.95	16.19 LT	595.07
C12	254+11.94	15.92 LT	595.00
C13	254+11.69	9.24 LT	594.90
C14	254+05.69	9.48 LT	594.95
C15	254+04.83	8.15 LT	(594.96)
C16	254+11.57	5.86 LT	(594.89)
C17	254+11.62	7.44 LT	594.88

MODEL: Default
FILE NAME: pw:\\PW01.hornershifrin.com:HS IDOT\Documents\230560000-PTB195-007_D1_Paul-Sac_Phil_SubCollins\CAD_Sheets\D162K65_Sacramento\D162K65-sht-ada-04.dgn

HORNER SHIFRIN
WWW.HORNERSHIFRIN.COM

USER NAME = krkubalanza	DESIGNED -	REVISED -	
	DRAWN -	REVISED -	
PLOT SCALE = 10.0000 ' / in.	CHECKED -	REVISED -	
PLOT DATE = 10/7/2025	DATE -	REVISED -	

STATE OF ILLINOIS
DEPARTMENT OF TRANSPORTATION

SACRAMENTO BOULEVARD AT CONGRESS PARKWAY
ADA DETAILS

SCALE: 1" = 5' | SHEET 4 OF 8 SHEETS | STA. TO STA.

F.A.I. RTE.	SECTION	COUNTY	TOTAL SHEETS	SHEET NO.
290	2019-192-B-R	COOK	237	49
		CONTRACT NO. 62K65		
		ILLINOIS	FED. AID PROJECT	

LEGEND

(XXX.XX) EXISTING ELEVATION

DETECTABLE WARNING

DEPRESSED CURB AND GUTTER

PC CONC SIDEWALK 5
SUB GRAN MAT B 4

PC CONC SIDEWALK 8
SUB GRAN MAT B 4

CONC MEDIAN SURF 6
SUB GRAN MAT B 4

NOTE

THE PARTIAL TRAFFIC SIGNAL EQUIPMENT DISPLAYED ON THESE SHEETS ARE APPROXIMATE AND FOR REFERENCE ONLY. PLEASE REFER TO THE TRAFFIC SIGNAL SHEETS FOR MORE INFORMATION.

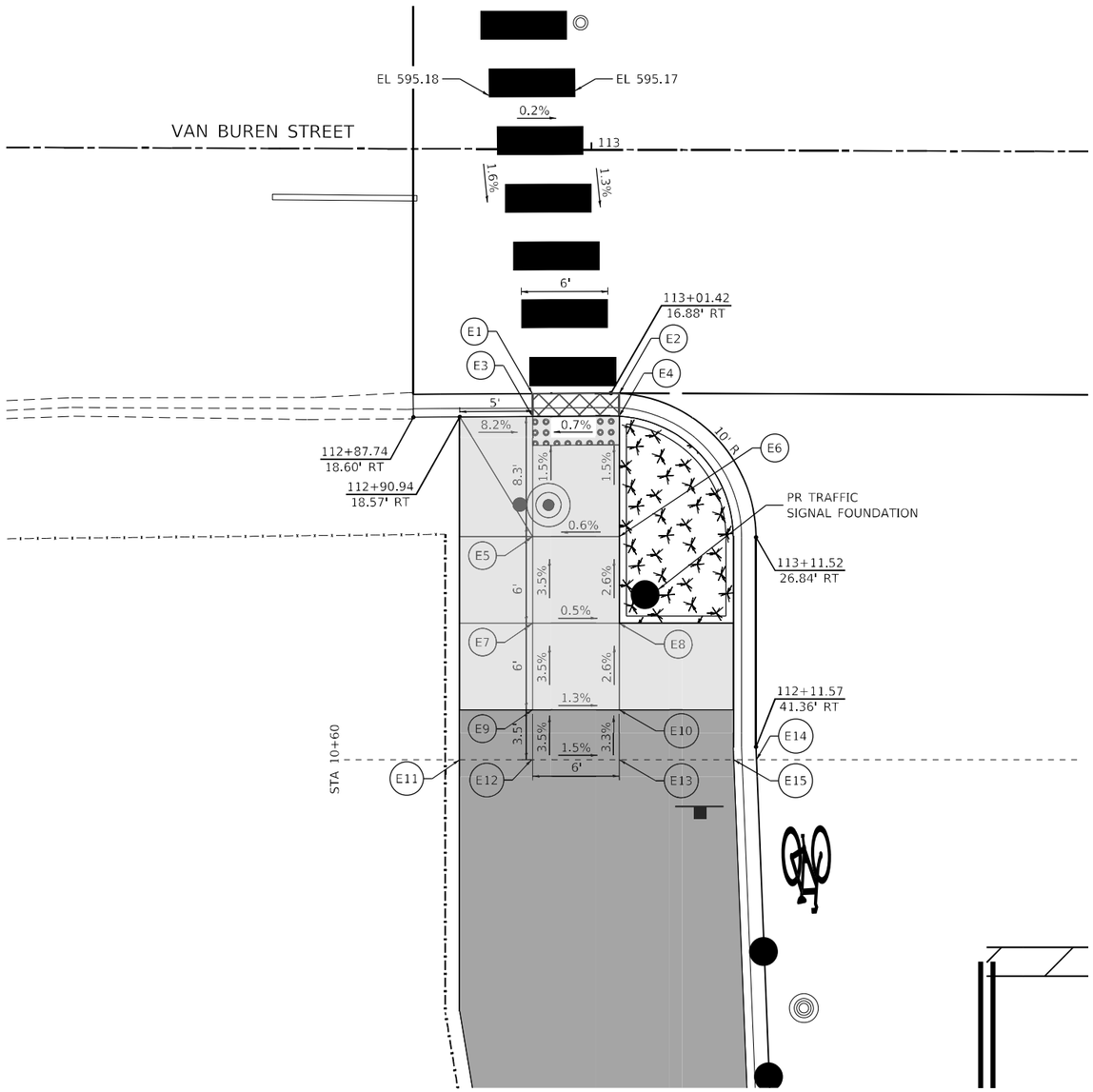

VAN BUREN STREET [SOUTHWEST]

POINT	STATION	OFFSET (LT/RT)	ELEVATION
E1	112+95.98	16.93 RT	(594.85)
E2	113+02.00	16.87 RT	(594.89)
E3	112+96.00	18.51 RT	594.84
E4	113+02.00	18.47 RT	594.88
E5	112+96.03	26.84 RT	594.97
E6	113+02.03	26.82 RT	595.01
E7	112+96.05	32.84 RT	595.17
E8	113+02.05	32.82 RT	595.14
E9	112+96.08	38.84 RT	595.38
E10	113+02.08	38.82 RT	595.30
E11	112+91.03	42.32 RT	595.58
E12	112+96.03	42.30 RT	595.51
E13	113+02.09	42.28 RT	595.42
E14	113+11.61	42.24 RT	594.86
E15	113+10.03	42.25 RT	595.30

0 5 10 15
SCALE IN FEET

MODEL: Default
FILE NAME: pw:\\PW01.hornershifrin.com:HS_IDOT\Documents\2305600\0-PTB195-007 D1 Rd Stg_mst_SueCollins\CAD Sheets\D162K65_Sacramento\D162K65-sht-ada-05.dgn

HORNER SHIFRIN
WWW. HORNERSHIFRIN .COM

USER NAME = krkubalanza	DESIGNED -	REVISED -	
	DRAWN -	REVISED -	
PLOT SCALE = 10.0000 ' / in.	CHECKED -	REVISED -	
PLOT DATE = 10/7/2025	DATE -	REVISED -	

STATE OF ILLINOIS
DEPARTMENT OF TRANSPORTATION

SACRAMENTO BOULEVARD AT VAN BUREN STREET
ADA DETAILS

SCALE: 1" = 5' | SHEET 5 OF 8 SHEETS | STA. | TO STA.

F.A.I. RTE.	SECTION	COUNTY	TOTAL SHEETS	SHEET NO.
290	2019-192-B-R	COOK	237	50
		CONTRACT NO. 62K65		
	ILLINOIS	FED. AID PROJECT		

LEGEND

(XXX.XX)	EXISTING ELEVATION
	DETECTABLE WARNING
	DEPRESSED CURB AND GUTTER
	PC CONC SIDEWALK 5 SUB GRAN MAT B 4
	PC CONC SIDEWALK 8 SUB GRAN MAT B 4
	CONC MEDIAN SURF 6 SUB GRAN MAT B 4

NOTE

THE PARTIAL TRAFFIC SIGNAL EQUIPMENT DISPLAYED ON THESE SHEETS ARE APPROXIMATE AND FOR REFERENCE ONLY. PLEASE REFER TO THE TRAFFIC SIGNAL SHEETS FOR MORE INFORMATION.

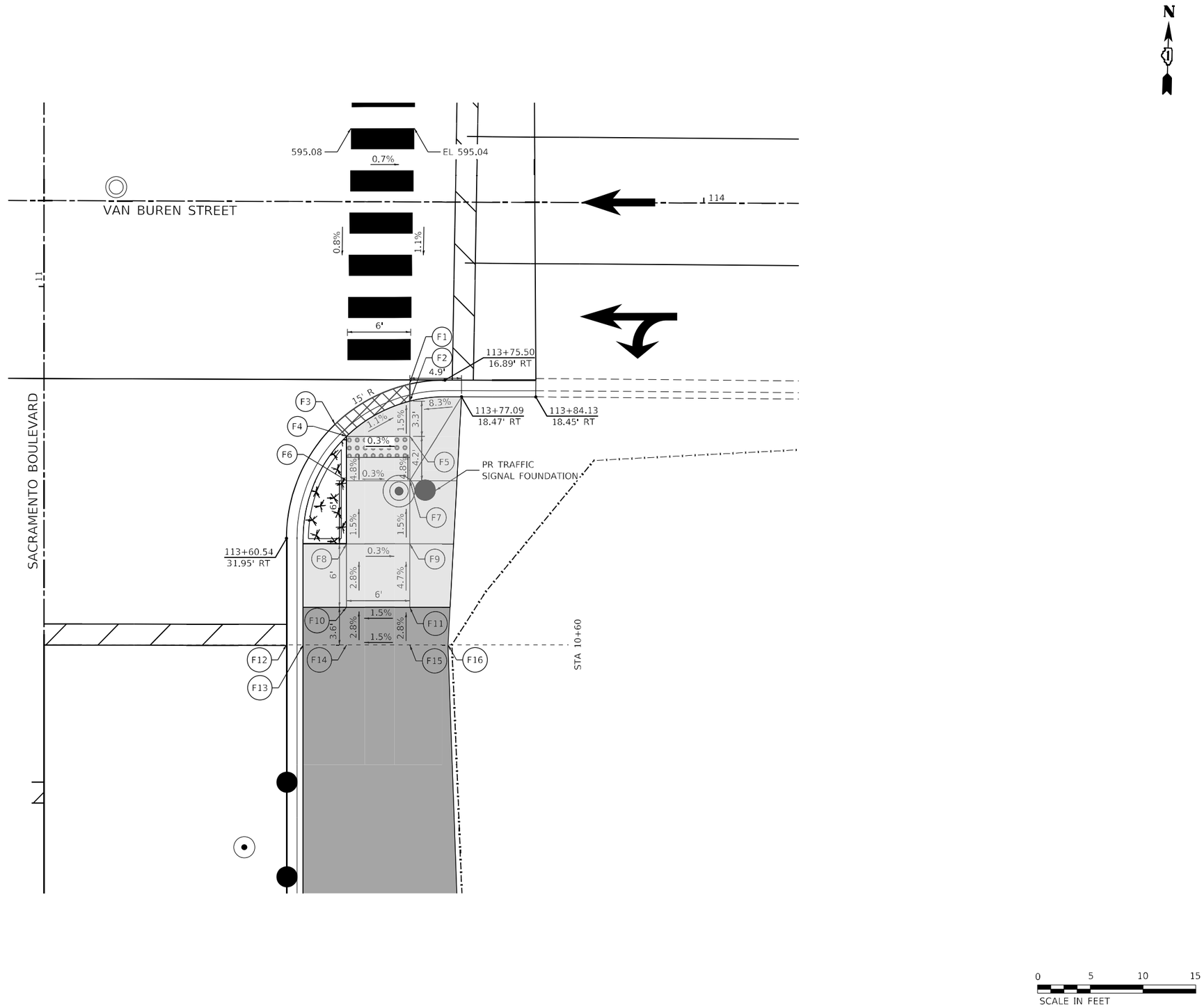

VAN BUREN STREET [SOUTHEAST]

POINT	STATION	OFFSET (LT/RT)	ELEVATION
F1	113+72.14	17.28 RT	(594.78)
F2	113+72.19	18.88 RT	594.77
F3	113+65.10	21.12 RT	(594.85)
F4	113+66.20	22.26 RT	594.84
F5	113+72.20	22.23 RT	594.82
F6	113+66.22	26.46 RT	595.04
F7	113+72.22	26.43 RT	595.02
F8	113+66.24	32.46 RT	595.13
F9	113+72.24	32.43 RT	595.11
F10	113+66.26	38.46 RT	595.30
F11	113+72.26	38.43 RT	595.39
F12	113+60.58	42.06 RT	594.90
F13	113+62.16	42.05 RT	595.34
F14	113+66.28	42.03 RT	595.40
F15	113+72.28	42.01 RT	595.49
F16	113+75.90	42.00 RT	595.54

MODEL: Default
FILE NAME: pw:\\PW01.hornershifrin.com:HS IDOT\Documents\230560000-PTB195-007_D1_Paul-Sac_Phil_SubCollins\CAD_Sheets\D162K65_Sacramento\D162K65-sht-ada-06.dgn

HORNER SHIFRIN
WWW.HORNERSHIFRIN.COM

USER NAME = krkubalanza	DESIGNED -	REVISED -	
	DRAWN -	REVISED -	
PLOT SCALE = 10.0000 ' / in.	CHECKED -	REVISED -	
PLOT DATE = 10/7/2025	DATE -	REVISED -	

STATE OF ILLINOIS
DEPARTMENT OF TRANSPORTATION

SACRAMENTO BOULEVARD AT VAN BUREN STREET
ADA DETAILS

SCALE: 1" = 5' | SHEET 6 OF 8 SHEETS | STA. TO STA.

F.A.I. RTE.	SECTION	COUNTY	TOTAL SHEETS	SHEET NO.
290	2019-192-B-R	COOK	237	51
		CONTRACT NO. 62K65		
		ILLINOIS	FED. AID PROJECT	

LEGEND

(XXX.XX) EXISTING ELEVATION

DETECTABLE WARNING

DEPRESSED CURB AND GUTTER

PC CONC SIDEWALK 5
SUB GRAN MAT B 4

PC CONC SIDEWALK 8
SUB GRAN MAT B 4

CONC MEDIAN SURF 6
SUB GRAN MAT B 4

NOTE

THE PARTIAL TRAFFIC SIGNAL EQUIPMENT DISPLAYED ON THESE SHEETS ARE APPROXIMATE AND FOR REFERENCE ONLY. PLEASE REFER TO THE TRAFFIC SIGNAL SHEETS FOR MORE INFORMATION.

VAN BUREN STREET [NORTHWEST]

POINT	STATION	OFFSET (LT/RT)	ELEVATION
H1	112+47.87	34.27 LT	(595.23)
H2	112+46.89	29.65 LT	(595.04)
H3	112+46.04	25.65 LT	(594.13)
H4	112+45.22	21.81 LT	(594.70)
H5	112+45.23	20.18 LT	(594.64)
H6	112+79.52	16.12 LT	(594.80)
H7	112+61.75	33.87 LT	595.10
H8	112+51.55	29.73 LT	594.74
H9	112+61.57	25.73 LT	594.68
H10	112+61.60	21.87 LT	594.37
H11	112+65.23	20.87 LT	594.30
H12	112+76.64	34.22 LT	595.04
H13	112+76.66	29.82 LT	594.78
H14	112+76.68	25.82 LT	594.72
H15	112+76.77	21.94 LT	594.49
H16	112+76.71	20.35 LT	(594.40)
H17	112+79.86	20.37 LT	(594.43)
H18	112+78.25	29.82 LT	594.77
H19	112+78.27	25.82 LT	594.71
H20	112+87.57	20.73 LT	594.43
H21	112+90.33	25.89 LT	594.54
H22	112+90.36	21.63 LT	(594.55)
H23	112+90.29	34.42 LT	594.54
H24	112+90.31	29.89 LT	594.54
H25	112+90.68	36.20 LT	594.53
H26	112+90.35	23.34 LT	594.54
H27	113+04.02	61.33 LT	(594.08)
H28	112+95.92	25.78 LT	(594.51)
H29	112+97.72	28.49 LT	(594.49)
H30	112+97.88	34.60 LT	594.41
H31	112+99.44	34.33 LT	(594.42)
H32	112+96.90	47.95 LT	(594.87)
H33	112+92.57	44.70 LT	(594.80)
H34	112+99.40	43.26 LT	(594.76)
H35	112+92.99	48.79 LT	(594.94)

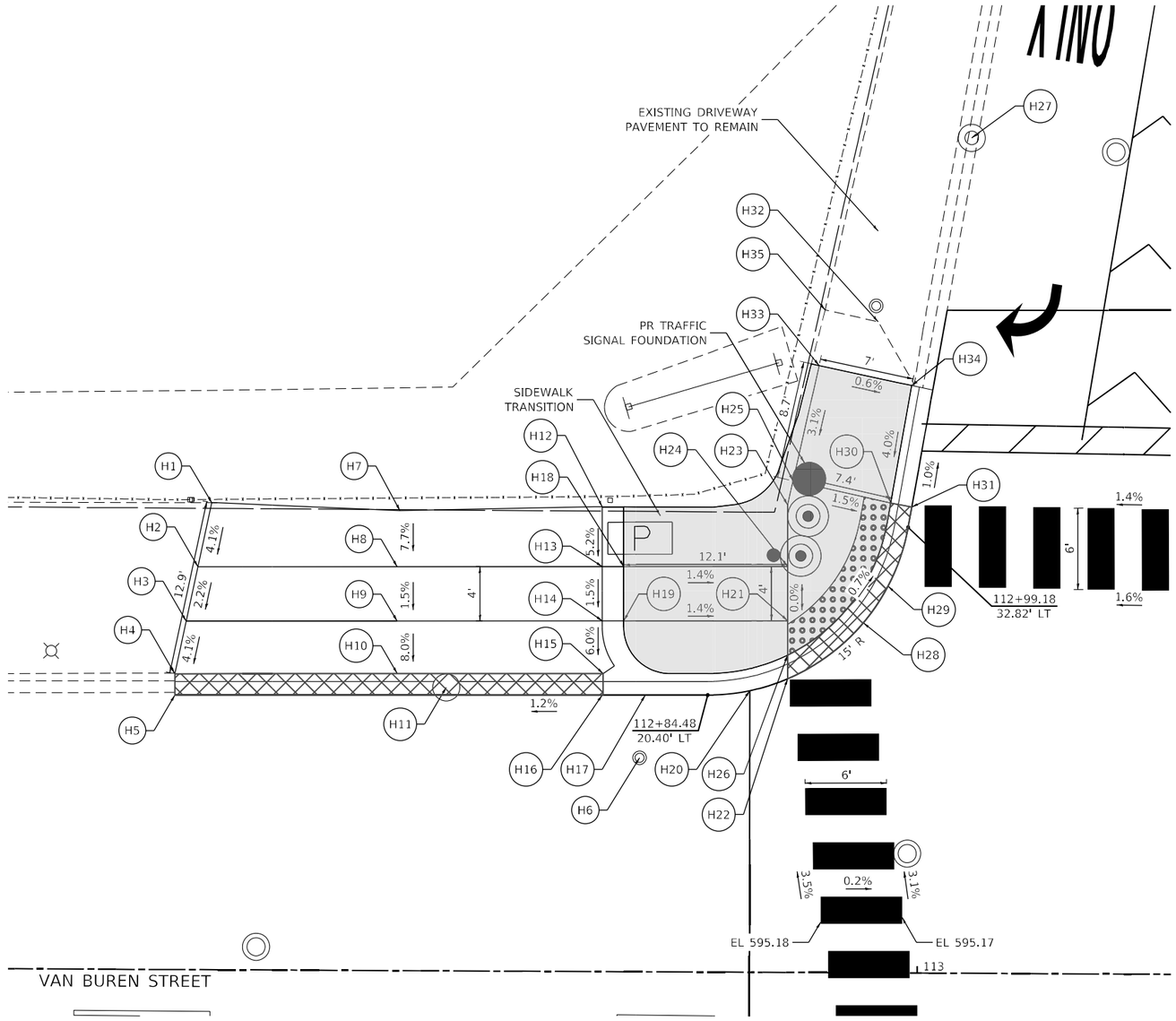

0 5 10 15
SCALE IN FEET

HORNER SHIFRIN
WWW. HORNERSHIFRIN .COM

USER NAME = krkubalanza	DESIGNED -	REVISED -
	DRAWN -	REVISED -
PLOT SCALE = 10.0000 ' / in.	CHECKED -	REVISED -
PLOT DATE = 10/7/2025	DATE -	REVISED -

STATE OF ILLINOIS
DEPARTMENT OF TRANSPORTATION

SACRAMENTO BOULEVARD AT VAN BUREN STREET
ADA DETAILS

SCALE: 1" = 5' | SHEET 7 OF 8 SHEETS | STA. | TO STA.

F.A.I. RTE.	SECTION	COUNTY	TOTAL SHEETS	SHEET NO.
290	2019-192-B-R	COOK	237	52
		CONTRACT NO. 62K65		
		ILLINOIS	FED. AID PROJECT	

MODEL: Default
FILE NAME: pw:\\PW01.hornershifrin.com:HS DOT\Documents\2305600\0-PTB 195-007 D1 Pts\Sac_Plnt_SuicCollins\CAD Sheets\D162K65_Sacramento\D162K65-pln-ada-07.dgn

LEGEND

(XXX.XX) EXISTING ELEVATION

DETECTABLE WARNING

DEPRESSED CURB AND GUTTER

PC CONC SIDEWALK 5
SUB GRAN MAT B 4

PC CONC SIDEWALK 8
SUB GRAN MAT B 4

CONC MEDIAN SURF 6
SUB GRAN MAT B 4

NOTE

THE PARTIAL TRAFFIC SIGNAL EQUIPMENT DISPLAYED ON THESE SHEETS ARE APPROXIMATE AND FOR REFERENCE ONLY. PLEASE REFER TO THE TRAFFIC SIGNAL SHEETS FOR MORE INFORMATION.

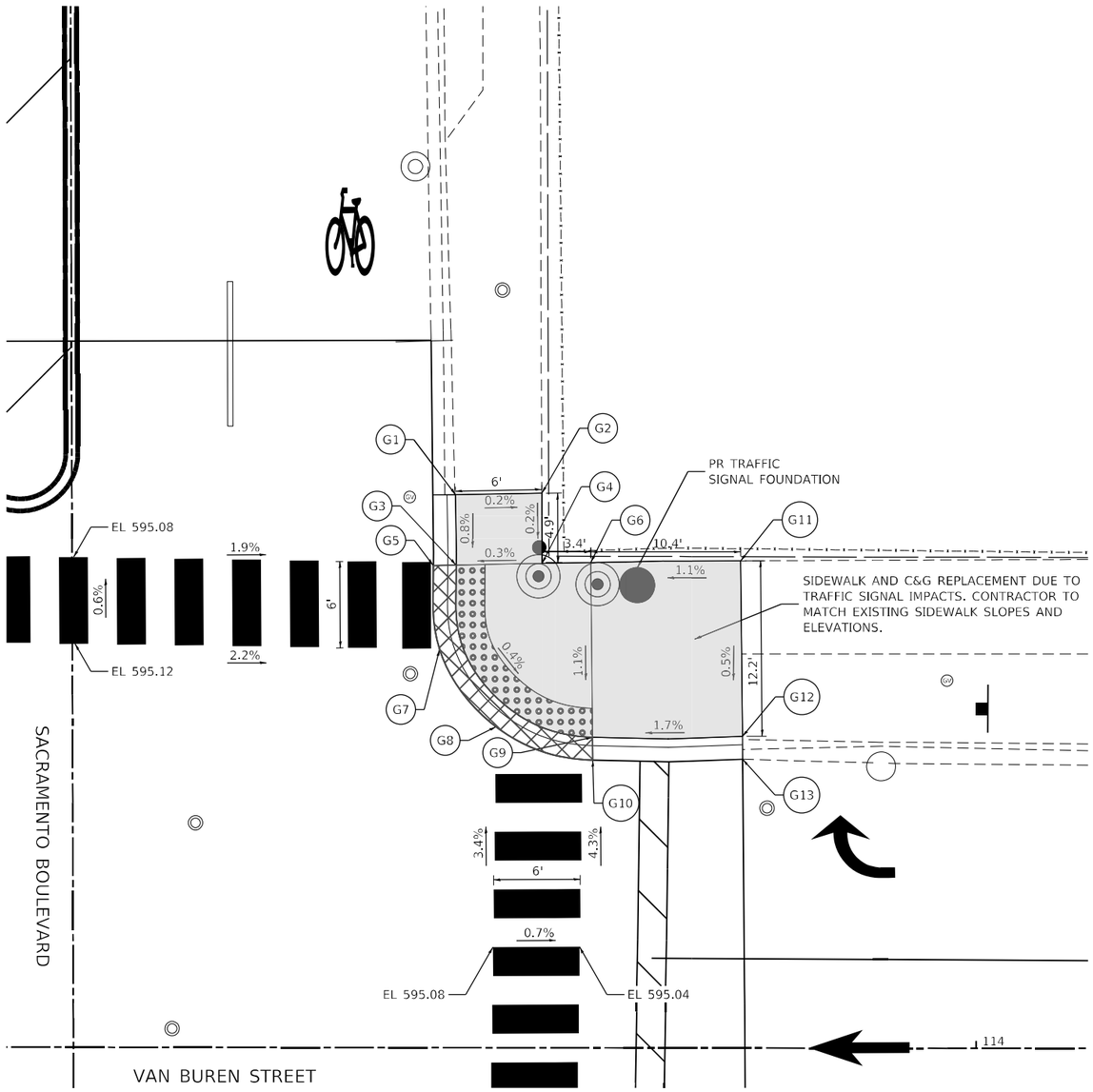

VAN BUREN STREET [NORTHEAST]

POINT	STATION	OFFSET (LT/RT)	ELEVATION
G1	113+63.87	38.34 LT	(594.77)
G2	113+69.85	38.46 LT	(594.76)
G3	113+63.91	33.47 LT	(594.73)
G4	113+69.88	33.59 LT	(594.75)
G5	113+62.33	33.44 LT	(594.69)
G6	113+73.24	33.65 LT	(594.79)
G7	113+62.78	27.62 LT	(594.70)
G8	113+66.70	22.25 LT	(594.67)
G9	113+63.39	21.54 LT	(594.66)
G10	113+73.40	19.96 LT	(594.54)
G11	113+83.63	33.78 LT	(594.90)
G12	113+83.78	21.60 LT	(594.84)
G13	113+83.80	20.02 LT	(594.43)

0 5 10 15
SCALE IN FEET

MODEL: Default
FILE NAME: c:\pw\pw01.hornershifrin.com\HS_IDOT\Documents\330960004-PTB195-007_01_Paul-Sac_PhII_SiteCellInfo\CAD_Sheets\D162K65_Sacramento\D162K65_Sacramento-ada-details.dgn

HORNER SHIFRIN
WWW. HORNERSHIFRIN .COM

USER NAME = krkubalanza
PLOT SCALE = 10.0000 ' / in.
PLOT DATE = 10/7/2025
DESIGNED -
DRAWN -
CHECKED -
DATE -
REVISED -
REVISED -
REVISED -
REVISED -

STATE OF ILLINOIS
DEPARTMENT OF TRANSPORTATION

SACRAMENTO BOULEVARD AT VAN BUREN STREET
ADA DETAILS

SCALE: 1" = 5' | SHEET 8 OF 8 SHEETS | STA. | TO STA.

F.A.I. RTE.	SECTION	COUNTY	TOTAL SHEETS	SHEET NO.
290	2019-192-B-R	COOK	237	53
		CONTRACT NO. 62K65		
	ILLINOIS FED. AID PROJECT			

MAINTENANCE OF TRAFFIC – GENERAL NOTES

1. TRAFFIC CONDITIONS, CRASHES, AND OTHER UNFORSEEN EMERGENCY CONDITIONS MAY REQUIRE THE ENGINEER TO RESTRICT, MODIFY, OR REMOVE LANE CLOSURES OR CHANNELIZATIONS SHOWN ON THE PLANS. THE CONTRACTOR SHALL MAKE THE NECESSARY ADJUSTMENTS AS DIRECTED BY THE ENGINEER WITHOUT DELAY. COMPLIANCE WITH THIS REQUIREMENT SHALL BE CONSIDERED INCLUDED IN THE CONTRACT UNIT PRICE OF "TRAFFIC CONTROL AND PROTECTION (EXPRESSWAYS)." NO ADDITIONAL COMPENSATION WILL BE ALLOWED.

2. THE MAINTENANCE OF TRAFFIC PLANS SHALL SERVE AS A GUIDE FOR THE SAFE DIVERSION OF TRAFFIC DURING EXECUTION OF THE CONTRACT. THE CONTRACTOR MAY MODIFY THE MAINTENANCE OF TRAFFIC PLANS TO MEET CONSTRUCTION NEEDS, BUT NOT AT THE EXPENSE OF PUBLIC SAFETY OR CONVENIENCE. ANY CHANGES TO THE TRAFFIC CONTROL SHALL BE SUBMITTED TO THE ENGINEER FOR REVIEW AND APPROVAL.

3. THE CONTRACTOR SHALL BE RESPONSIBLE FOR THE NOTIFICATION OF ALL EMERGENCY SERVICES, SCHOOL DISTRICTS, I.D.O.T.'S COMMUNICATION CENTER, SPRINGFIELD TRUCK PERMIT SECTION, AND OTHER AGENCIES AFFECTED BY THE SACRAMENTO BOULEVARD BRIDGE CLOSURE. THE CONTRACTOR SHALL ALSO BE RESPONSIBLE FOR POSTING SIGNS THAT WILL INDICATE THE DATES CLOSURES WILL BE IN PLACE.

4. THE CONTRACTOR SHALL REMOVE OR COVER ALL EXISTING SIGNS THAT CONFLICT WITH OR DO NOT APPLY TO THE REVISED TRAFFIC PATTERNS AND SHALL RESTORE THE SIGNS AT THE END OF CONSTRUCTION AS DIRECTED BY THE ENGINEER.

5. THE CONTRACTOR SHALL PROVIDE 48 HOURS ADVANCE NOTICE TO THE ENGINEER OF ANY CONSTRUCTION WORK.

6. ALL TEMPORARY PAVEMENT MARKINGS SHOWING DETERIORATION AFTER 7 DAYS OF SERVICE SHALL BE REPLACED BY THE CONTRACTOR AS DIRECTED BY THE ENGINEER, SUFFICIENT QUANTITIES FOR 2 APPLICATIONS OF TEMPORARY PAVEMENT MARKINGS HAVE BEEN PROVIDED FOR EACH STAGE.

7. DURING CONSTRUCTION ACTIVITIES, THE CONTRACTOR SHALL TAKE THE NECESSARY PRE-CAUTIONS TO AVOID ANY CONSTRUCTION DEBRIS FROM ENCROACHING INTO THE ADJACENT THROUGH LANES.

8. THE CONTRACTOR SHALL REQUEST AND GAIN THE APPROVAL FROM THE ILLINOIS DEPARTMENT OF TRANSPORTATION'S EXPRESSWAY TRAFFIC OPERATIONS ENGINEER AT WWW.IDOTLCS.COM TWENTY-FOUR (24) HOURS IN ADVANCE OF ALL DAILY LANE, RAMP, AND SHOULDER CLOSURES. SEE KEEPING THE EXPRESSWAY OPEN TO TRAFFIC SPECIAL PROVISION FOR MORE INFORMATION.

9. ALL STAGE CHANGES REQUIRING THE STOPPING AND/OR THE PACING OF TRAFFIC SHALL TAKE PLACE DURING THE ALLOWABLE HOURS FOR FULL EXPRESSWAY CLOSURES AND SHALL BE APPROVED BY THE DEPARTMENT. THE CONTRACTOR SHALL NOTIFY THE DISTRICT ONE EXPRESSWAY TRAFFIC CONTROL SUPERVISOR AT LEAST 3 WORKING DAYS (WEEKENDS AND HOLIDAYS DO NOT COUNT INTO THIS 72 HOURS NOTIFICATION) IN ADVANCE OF ANY PROPOSED STAGE CHANGE.

10. A MAINTENANCE OF TRAFFIC PLAN SHALL BE SUBMITTED TO THE DISTRICT ONE EXPRESSWAY TRAFFIC CONTROL SUPERVISOR 14 DAYS IN ADVANCE OF ANY STAGE CHANGES OR FULL EXPRESSWAY CLOSURES. THE MAINTENANCE OF TRAFFIC PLAN SHALL INCLUDE, BUT NOT BE LIMITED TO: LANE AND RAMP CLOSURES, EXISTING GEOMETRICS, AND EQUIPMENT AND MATERIAL LOCATIONS.

11. CHANGEABLE MESSAGE SIGNS SHALL BE INSTALLED TWO WEEKS PRIOR TO ALL ROAD CLOSURE, TRAFFIC STAGE CHANGES, AND NEW TRAFFIC SIGNAL TURN-ON EVENTS ON EACH APPROACH OF THE EFFECTED ROADWAY TO WARN MOTORISTS OF THE UPCOMING EVENT. THE SIGN MESSAGES SHALL BE REMOVED TWO WEEKS THEREAFTER UNLESS THE SIGNS ARE NEEDED AGAIN FOR A SUBSEQUENT FUTURE EVENT THAT WILL OCCUR WITHIN 2 WEEKS ON THE SAME APPROACH OF THE EFFECTED ROADWAY. THE SIGN LOCATIONS SHALL BE (DETERMINED BY THE ENGINEER) PLACED AS DIRECTED BY THE ENGINEER.

12. TEMPORARY CONCRETE BARRIER SHALL BE INSTALLED IN ACCORDANCE WITH SECTION 704 OF THE IDOT STANDARD SPECIFICATIONS. ALL TEMPORARY CONCRETE BARRIER APPROACH AND DEPARTING END UNITS SHALL BE ANCHORED TO THE PAVEMENT USING SIX ANCHOR PINS AS SHOWN IN IDOT STANDARD 704001. PINNING OF ADDITIONAL BARRIER UNITS WITH THREE ANCHOR PINS ON THE TRAFFIC SIDE HOLES WITHIN THE INSTALLATION SHALL BE REQUIRED WHEN EQUIPMENT, VEHICLES, MATERIALS, FIXED OBJECTS, OR A DROP-OFF IS LOCATED WITHIN 24" BEHIND THE BARRIER. THE 24"OF CLEAR PAVEMENT MEASUREMENT SHALL BE FROM THE BASE OF THE NON-TRAFFIC SIDE OF THE BARRIER. TRAFFIC SIDE PINNED BARRIER SHALL HAVE A MINIMUM OF 6" OF CLEAR PAVEMENT BEHIND THE BARRIER. WHERE BOTH PINNED AND UNPINNED BARRIER UNITS ARE USED IN A CONTINUOUS INSTALLATION, A TRANSITION SHALL BE PROVIDED BETWEEN THEM. THE TRANSITION FROM PINNED TO UNPINNED BARRIER SHALL CONSIST OF TWO ANCHOR PINS INSTALLED IN THE END HOLES ON THE TRAFFIC SIDE OF THE FIRST BARRIER BEYOND THE PINNED SECTION AND ONE ANCHOR PIN INSTALLED IN THE MIDDLE HOLE OF THE TRAFFIC SIDE OF THE SECOND BARRIER BEYOND THE PINNED SECTION. THE THIRD BARRIER BEYOND THE PINNED SECTION SHALL THEN BE UNPINNED.

13. ALL EXISTING LANE LINE PAVEMENT MARKINGS LOCATED WITHIN TEMPORARY LANE CLOSURE TAPERS, LANE SHIFT TAPERS OR IN LOCATIONS THAT CONFLICT WITH THE TEMPORARY PAVEMENT MARKING TAPE USED FOR STAGING SHALL BE REMOVED VIA WATER BLASTING WITH VACUUM RECOVERY IF THE STAGING WILL REMAIN IN PLACE FOR MORE THAN 14 DAYS. SEE ROADWAY REMOVAL PLANS AND PAVEMENT MARKING PLANS FOR ANTICIPATED PAVEMENT MARKINGS IN CONFLICT TO BE REMOVED AND RESTORATION AND PROPOSED PAVEMENT MARKINGS TO BE INSTALLED AFTER THE COMPLETION OF STAGING.

14. THE "ROAD CONSTRUCTION AHEAD"SIGNS SHALL REMAIN INSTALLED UNTIL THE COMPLETION OF THE PROJECT OR WHEN NO ROADWAY HAZARDS REMAIN WITHIN THE WORK ZONE.

MAINTENANCE OF TRAFFIC – GENERAL NOTES (CONT.)

15. WHEN WORKING ADJACENT TO THE ROAD AND UTILIZING DAILY LANE CLOSURES, DROP-OFFS ADJACENT TO THE TRAVEL LANES SHALL BE KEPT TO A MINIMUM. PROTECTION OF THE DROP-OFF SHALL BE ACCORDING TO THE IDOT BUREAU OF SAFETY PROGRAMS AND ENGINEERING, SAFETY ENGINEERING POLICY MEMORANDUM 4-21. DROP-OFFS GREATER THAN THE SPECIFIED MAXIMUM DROP-OFF DEPTH SHOWN IN TABLE 2, CONDITION II OF THE SAFETY 4-21 POLICY WILL NOT BE ALLOWED AT LOCATIONS WHERE THE DROP-OFF IS LOCATED WITHIN 8 FT OF THE EDGE OF THE NEAREST OPEN TRAFFIC LANE. THE CONTRACTOR WILL BE REQUIRED TO PERFORM THE EXCAVATION REQUIRED FOR THE CONSTRUCTION DURING THE TIME THAT THE ADJACENT LANE IS CLOSED. AS NOTED ABOVE, PRIOR TO REOPENING THE LANE TO TRAFFIC, THE CONTRACTOR SHALL PLACE SUFFICIENT MATERIAL TO REDUCE THE DROP-OFF TO LESS THAN THE SPECIFIED MAXIMUM DROP-OFF DEPTH SHOWN IN TABLE 2, CONDITION II OF THE SAFETY 4-21 POLICY AND ENSURE THAT THE DROP-OFF AREAS MEET THE OFFSET, HEIGHT, AND DURATION REQUIREMENTS TO USE BARRICADES/DRUMS AT THE END OF EACH WORKDAY. THE CONTRACTOR SHALL BE RESPONSIBLE TO DETERMINE THE AMOUNT OF WORK THAT CAN BE COMPLETED WITHIN THE TIME OF THE DAILY LANE CLOSURE. IF THE ABOVE REQUIREMENTS CAN'T BE MET, AND IT IS DETERMINED THAT OVERNIGHT LANE CLOSURES AND/OR TEMPORARY CONCRETE BARRIER WALL INSTALLATION WILL BE NECESSARY, THEN IDOT WRITTEN APPROVAL WILL BE REQUIRED PRIOR TO THE INSTALLATION OF THESE ITEMS. NO ADDITIONAL COMPENSATION SHALL BE ALLOWED TO COMPLY WITH THIS REQUIREMENT. WHERE POSITIVE PROTECTION (TEMPORARY CONCRETE BARRIER PER STD. 704001) IS PROVIDED, THIS REQUIREMENT IS NULLIFIED.

16. THE CONTRACTOR SHALL CONTACT KALPANA KANNAN-HOSADURGA, THE DISTRICT ONE TRAFFIC CONTROL SUPERVISOR AT KALPANA.KANNAN-HOSADURGA@LLLINOIS.GOV A MINIMUM OF 72 HOURS IN ADVANCE OF BEGINNING WORK.

17. THE CONTRACTOR SHALL CONTACT THE EXPRESSWAYS CARLOS MUNOZ AT CARLOS.MUNOZ@ILLINOIS.GOV A MINIMUM OF 72 HOURS IN ADVANCE OF BEGINNING WORK.

18. CONTRACTOR IN COORDINATION WITH THE RESIDENT ENGINEER SHALL NOTIFY EXPRESSWAYS 14 DAYS IN ADVANCE PRIOR TO FULLSTOPS FOR BEAM REMOVAL AND PLACEMENT ON I-290.

19. CONTRACTOR SHALL CONTACT THE CHICAGO TRANSIT AUTHORITY COORDINATOR, TRAFFIC PLANNING, JACK CHALABIAN AT JCHALABIAN@TRANSITCHICAGO.COM AT LEAST TWO (2) WEEKS BEFORE ANY BUS SERVICE CHANGES.

20. MANHOLE/CATCHBASIN LIDS ON EXPRESSWAY WITHIN THE PROJECT STAGING LIMITS SHALL BE WELDED DOWN PRIOR TO BEGINNING ANY WORK. THIS WORK SHALL BE INCLUDED IN THE COST OF TRAFFIC CONTROL AND PROTECTION (EXPRESSWAYS).

21. THE "ARTERIAL ROAD INFORMATION SIGN (TC-22)" IS APPLICABLE ONLY TO ARTERIAL ROADS AND SHALL NOT BE APPLIED TO EXPRESSWAYS/TOLLWAYS.

22. OPEN LID DRAINAGE STRUCTURES SHALL NOT BE CLOSED, COVERED, OR OTHERWISE OBSTRUCTED DURING CONSTRUCTION OF THIS ROADWAY WITHOUT PERMISSON FROM THE CITY OF CHICAGO.

23. AT LOCATIONS WHERE TRAFFIC IS SHIFTED ONTO THE EXISTING SHOULDERS, THE EXISTING RUMBLE STRIPS SHALL BE REMOVED.

24. REFER TO KEEPING EXPRESSWAYS OPEN TO TRAFFIC SPECIAL PROVISION FOR LANE CLOSURE REQUIREMENTS ON I-290.

25. FLAGGERS WILL BE REQUIRED ON HARRISON ST, VAN BUREN ST, AND CALIFORNIA AVE FOR FULLSTOPS ON I-290. TOTAL NUMBER OF FLAGGERS AND FLAGGER LOCATIONS WILL BE DEPENDANT ON MOT PLANS SUBMITTED FOR FULLSTOPS.

SUGGESTED STAGING NOTES

PRE-STAGE 1

TRAFFIC

I-290 (EISENHOWER EXPRESSWAY)
1. ALL WORK MUST BE DONE DURING ALLOWABLE HOURS AS NOTED IN THE "KEEPING THE EXPRESSWAY OPEN TO TRAFFIC" SPECIAL PROVISION.
2. CLOSE LANES OF TRAFFIC AS NEEDED AT A TIME UTILIZING HIGHWAY STANDARDS 701400, 701428, 701446. A MAXIMUM OF 3 LANES CAN BE CLOSED. ONE LANE SHALL REMAIN OPEN TO TRAFFIC AT ALL TIMES.
3. WORK CAN BE PERFORMED IN THE EASTBOUND AND WESTBOUND LANES AT THE SAME TIME.
4. REMOVE ALL TRAFFIC CONTROL DURING PEAK HOURS OR WHEN NO WORK IS BEING PERFORMED.

CTA
1. REFER TO THE CTA FLAGGING AND COORDINATION SPECIAL PROVISION FOR REQUIREMENTS WORKING ADJACENT TO OR ABOVE THE CTA RIGHT-OF-WAY.

CONSTRUCTION
1. REMOVE AND STORE EXISTING SIGNS ATTACHED TO SACRAMENTO BOULEVARD BRIDGE.
2. PLACE PROPOSED PROTECTIVE SHIELDING AT LOCATIONS AS SHOWN ON THE STRUCTURAL PLANS.
3. PERFORM SHOULDER RUMBLE STRIP REMOVAL ON EASTBOUND AND WESTBOUND SHOULDERS OF I-290.
4. REMOVE EXISTING SIGNS ALONG I-290 THAT CONFLICT WITH PROPOSED TEMPORARY SIGN PANELS.

STAGE 1

TRAFFIC

SACRAMENTO BOULEVARD
1. CLOSE SACRAMENTO BOULEVARD AND DETOUR TRAFFIC AND PEDESTRIANS AS SHOWN ON THE PLANS.

CONGRESS PARKWAY
1. CLOSE THE INSIDE LANE UTILIZING HIGHWAY STANDARD 701601. SHIFT TRAFFIC TO THE OUTSIDE AND MAINTAIN THE TWO EXISTING LANES AS SHOWN ON THE PLANS.
2. PLACE TEMPORARY CONCRETE BARRIER WALL BETWEEN TRAFFIC AND CONSTRUCTION ACTIVITIES.

VAN BUREN STREET
1. CLOSE THE INSIDE LANE UTILIZING HIGHWAY STANDARD 701601. SHIFT TRAFFIC TO THE OUTSIDE AND PROVIDE TWO 11-FOOT LANES AS SHOWN ON THE PLANS.
2. PLACE TEMPORARY CONCRETE BARRIER WALL BETWEEN TRAFFIC AND CONSTRUCTION ACTIVITIES.

I-290 (EISENHOWER EXPRESSWAY)
1. CLOSE THE INSIDE SHOULDER AND SHIFT TRAFFIC TO THE OUTSIDE UTILIZING DISTRICT ONE STANDARD TC-09 AND AS SHOWN ON THE PLANS. PROVIDE FOUR 11-FOOT-WIDE LANES OF TRAFFIC.
2. PLACE TEMPORARY CONCRETE BARRIER WALL BETWEEN TRAFFIC AND CONSTRUCTION ACTIVITIES.

CTA
1. REFER TO THE CTA FLAGGING AND COORDINATION SPECIAL PROVISION FOR REQUIREMENTS WORKING ADJACENT TO OR ABOVE THE CTA RIGHT-OF-WAY.

CONSTRUCTION
1. INSTALL TEMPORARY TRAFFIC SIGNALS AT THE SACRAMENTO BOULEVARD AND CONGRESS PKWY INTERSECTION AND AT THE SACRAMENTO BOULEVARD AND VAN BUREN STREET INTERSECTION.
2. REMOVE EXISTING BRIDGE DECK AND BEAMS. UTILIZE STAGE 1 - REMOVE EXISTING BRIDGE BEAMS AS NEEDED FOR BEAM REMOVAL.
3. PERFORM PIER REPAIRS AND PIER EXTENSIONS.

SUGGESTED STAGING NOTES (CONT.)

STAGE 1 - REMOVE EXISTING BRIDGE BEAMS

TRAFFIC

I-290 (EISENHOWER EXPRESSWAY)
1. ALL WORK TO BE DONE DURING ALLOWABLE HOURS AS NOTED IN THE "KEEPING THE EXPRESSWAY OPEN TO TRAFFIC" SPECIAL PROVISION.
2. STARTING FROM STAGE 1 CONFIGURATION, CLOSE THREE LANES OF TRAFFIC UTILIZING HIGHWAY STANDARDS 701400, 701401, 701428, AND 701446. LEAVE REMAINING LANE OPEN TO TRAFFIC.
3. CLOSE REMAINING LANE FOR 15-MINUTE DURATIONS AS NEEDED FOR BEAM REMOVAL. FULLSTOPS ARE ONLY ALLOWED DURING ALLOWABLE HOURS STATED ON THE KEEPING THE EXPRESSWAY OPEN TO TRAFFIC SPECIAL PROVISION.
4. CLOSE RAMPS AS NEEDED UTILIZING DISTRICT ONE STANDARD TC-08. RAMPS MAY BE CLOSED DURING ALLOWABLE TIMES.
5. RETURN TO STAGE 1 CONFIGURATION DURING PEAK HOURS.

CONSTRUCTION
1. REMOVE EXISTING BRIDGE BEAMS.

POST-STAGE 1

TRAFFIC

I-290 (EISENHOWER EXPRESSWAY)
1. ALL WORK MUST BE DONE DURING ALLOWABLE HOURS AS NOTED IN THE "KEEPING THE EXPRESSWAY OPEN TO TRAFFIC" SPECIAL PROVISION.
2. CLOSE LANES OF TRAFFIC AS NEEDED AT A TIME UTILIZING HIGHWAY STANDARDS 701400, 701428, 701446. A MAXIMUM OF 3 LANES CAN BE CLOSED. ONE LANE SHALL REMAIN OPEN TO TRAFFIC AT ALL TIMES.
3. WORK CAN BE PERFORMED IN THE EASTBOUND AND WESTBOUND LANES AT THE SAME TIME.
4. REMOVE ALL TRAFFIC CONTROL DURING PEAK HOURS OR WHEN NO WORK IS BEING PERFORMED.

CONSTRUCTION
1. INSTALL RUMBLE STRIPS ON OUTSIDE SHOULDER.

STAGE 2

TRAFFIC

SACRAMENTO BOULEVARD
1. MAINTAIN SACRAMENTO BOULEVARD CLOSURE AND DETOUR.

CONGRESS PARKWAY
1. MAINTAIN THE STAGE 1 LANE CONFIGURATION.

VAN BUREN STREET
1. MAINTAIN THE STAGE 1 LANE CONFIGURATION.

I-290 (EISENHOWER EXPRESSWAY)
1. CLOSE THE OUTSIDE SHOULDER AND SHIFT TRAFFIC TO THE INSIDE UTILIZING DISTRICT ONE STANDARD TC-09 AND AS SHOWN ON THE PLANS. PROVIDE FOUR 11-FOOT-WIDE LANES OF TRAFFIC.
2. PLACE TEMPORARY CONCRETE BARRIER WALL BETWEEN TRAFFIC AND CONSTRUCTION ACTIVITIES.

CTA
1. REFER TO THE CTA FLAGGING AND COORDINATION SPECIAL PROVISION FOR REQUIREMENTS WORKING ADJACENT TO OR ABOVE THE CTA RIGHT-OF-WAY.

CONSTRUCTION
1. PERFORM ABUTMENT REMOVAL.
2. CONSTRUCT PROPOSED ABUTMENTS AND MSE WALLS.
3. CONSTRUCT PROPOSED BRIDGE DECK.
4. UTILIZE STAGE 2 - ERECT PROPOSED BRIDGE BEAMS AS NEEDED FOR BEAM ERECTION.
5. CONSTRUCT PROPOSED GUARDRAIL, CURB AND GUTTER, BARRIER WALL, GRADING, AND PROPOSED SIGNING ALONG I-290.
6. CONSTRUCT PROPOSED BRIDGE APPROACH AND ROADWAY PAVEMENT ON SACRAMENTO BOULEVARD.
7. CONSTRUCT ADA IMPROVEMENTS AT THE NORTH LEG OF THE INTERSECTION OF SACRAMENTO BOULEVARD AND CONGRESS PARKWAY AND THE SOUTH LEG OF THE INTERSECTION OF SACRAMENTO BOULEVARD AND VAN BUREN STREET.
8. RE-INSTALL EXISTING SIGN PANELS.

SUGGESTED STAGING NOTES (CONT.)

STAGE 2 - ERECT PROPOSED BRIDGE BEAMS

TRAFFIC

I-290 (EISENHOWER EXPRESSWAY)
1. ALL WORK TO BE DONE DURING ALLOWABLE HOURS AS NOTED IN THE "KEEPING THE EXPRESSWAY OPEN TO TRAFFIC" SPECIAL PROVISION.
2. STARTING FROM STAGE 2 CONFIGURATION, CLOSE THREE LANES OF TRAFFIC UTILIZING HIGHWAY STANDARDS 701400, 701401, 701428, AND 701446. LEAVE REMAINING LANE OPEN TO TRAFFIC.
3. CLOSE REMAINING LANE FOR 15-MINUTE DURATIONS AS NEEDED FOR BEAM ERECTION. FULLSTOPS ARE ONLY ALLOWED DURING ALLOWABLE HOURS STATED ON THE KEEPING THE EXPRESSWAY OPEN TO TRAFFIC SPECIAL PROVISION.
4. CLOSE RAMPS AS NEEDED UTILIZING DISTRICT ONE STANDARD TC-08. RAMPS MAY BE CLOSED DURING ALLOWABLE TIMES.
5. RETURN TO STAGE 2 CONFIGURATION DURING PEAK HOURS.

CONSTRUCTION
1. ERECT PROPOSED BRIDGE BEAMS.

POST-STAGE 2

TRAFFIC

I-290 (EISENHOWER EXPRESSWAY)
1. ALL WORK MUST BE DONE DURING ALLOWABLE HOURS AS NOTED IN THE "KEEPING THE EXPRESSWAY OPEN TO TRAFFIC" SPECIAL PROVISION.
2. CLOSE LANES OF TRAFFIC AS NEEDED AT A TIME UTILIZING HIGHWAY STANDARDS 701400, 701428, 701446. A MAXIMUM OF 3 LANES CAN BE CLOSED. ONE LANE SHALL REMAIN OPEN TO TRAFFIC AT ALL TIMES.
3. WORK CAN BE PERFORMED IN THE EASTBOUND AND WESTBOUND LANES AT THE SAME TIME.
4. REMOVE ALL TRAFFIC CONTROL DURING PEAK HOURS OR WHEN NO WORK IS BEING PERFORMED.

CONSTRUCTION
1. INSTALL PERMANENT PAVEMENT MARKINGS ALONG I-290 (EISENHOWER EXPRESSWAY).

FILE NAME = P:\10-IL\14111-IDOT - Sacramento and Paulina over I-290\Work\CADD\Sacramento - Contract 62K65\CADD_Sheets\D1626K65-sht-staging-01-notes.dgn

COLLINS ENGINEERS INC.

USER NAME = omartinez	DESIGNED - OM	REVISED -
	DRAWN - OM	REVISED -
PLOT SCALE = 40.0000 ' / in.	CHECKED - RG	REVISED -
PLOT DATE = 10/15/2025	DATE - 09/12/2025	REVISED -

STATE OF ILLINOIS
DEPARTMENT OF TRANSPORTATION

FAI–290 (EISENHOWER EXPRESSWAY) AT SACRAMENTO BOULEVARD
SUGGESTED STAGING NOTES

SCALE: NTS | SHEET NO. 2 OF 2 SHEETS | STA. | TO STA.

F.A.I. RTE.	SECTION	COUNTY	TOTAL SHEETS	SHEET NO.
290	2019-192-B-R	COOK	237	55
		CONTRACT NO. 62K65		
FED. ROAD DIST. NO.	ILLINOIS	FED. AID PROJECT		

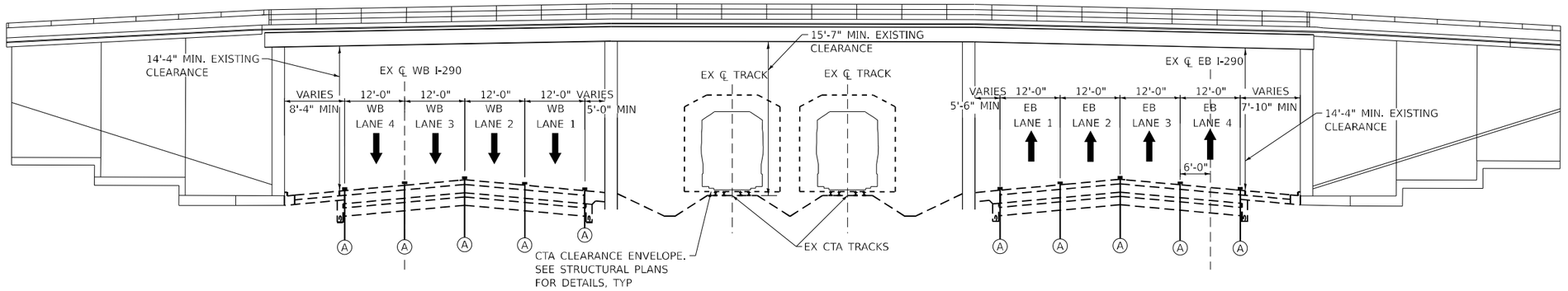

I–290 UNDER SACRAMENTO BOULEVARD – EXISTING CONDITIONS

(LOOKING EAST)
(SKEW SECTION)

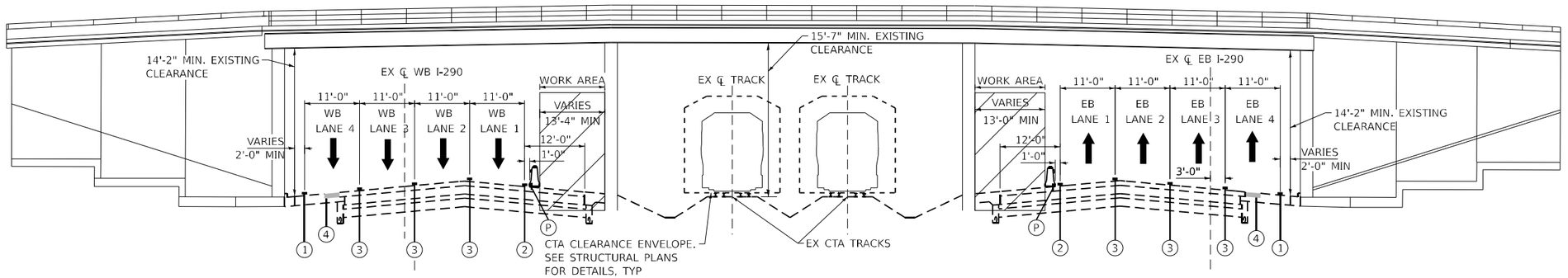

I–290 UNDER SACRAMENTO BOULEVARD – STAGE 1

(LOOKING EAST)
(SKEW SECTION)
NIGHTTIME CLOSURE ONLY OF INSIDE LANE (LANE 1)

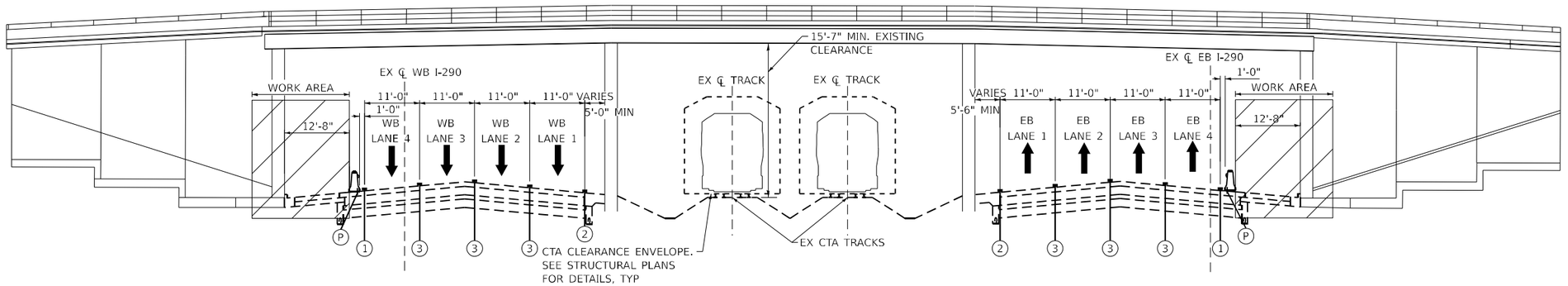

I–290 UNDER SACRAMENTO BOULEVARD – STAGE 2

(LOOKING EAST)
(SKEW SECTION)

LEGEND

- WORK AREA
- DIRECTION OF TRAFFIC
- TEMPORARY CONCRETE BARRIER WITH MONO-DIRECTIONAL, TYPE C REFLECTORS PER STD 704001 AND STD 782006

(1) TEMPORARY PAVEMENT MARKING - LINE 4" - TAPE IV TYPE (SOLID WHITE)
(2) TEMPORARY PAVEMENT MARKING - LINE 4" - TAPE IV TYPE (SOLID YELLOW)
(3) TEMPORARY PAVEMENT MARKING - LINE 5" - TAPE IV TYPE (10' DASH - 30' SKIP WHITE)
(4) HMA SHOULDER RUMBLE STRIP REMOVAL: 3' WIDTH
PR HMA SURFACE COURSE, MIX "D", IL-9.5, N70, 2"
(A) EXISTING PAVEMENT MARKING
(P) PINNING TEMPORARY CONCRETE BARRIER

FILE NAME = P:\10-ILL\14411-IDOT - Sacramento and Paulina over I-290\Work\CADD\Sacramento - Contract 62K65\CADD_Sheets\SD162K65-sht-staging-02-typ.dgn

COLLINS ENGINEERS INC.

USER NAME = omartinez	DESIGNED - OM	REVISED -	
	DRAWN - OM	REVISED -	
PLOT SCALE = 40.0000 ' / in.	CHECKED - RG	REVISED -	
PLOT DATE = 10/15/2025	DATE - 09/12/2025	REVISED -	

STATE OF ILLINOIS
DEPARTMENT OF TRANSPORTATION

FAI–290 (EISENHOWER EXPRESSWAY) AT SACRAMENTO BOULEVARD
MAINTENANCE OF TRAFFIC – TYPICAL SECTIONS

SCALE: NTS | SHEET NO. 1 OF 2 SHEETS | STA. | TO STA.

F.A.I. RTE.	SECTION	COUNTY	TOTAL SHEETS	SHEET NO.
290	2019-192-B-R	COOK	237	56
		CONTRACT NO. 62K65		
FED. ROAD DIST. NO.	ILLINOIS	FED. AID PROJECT		

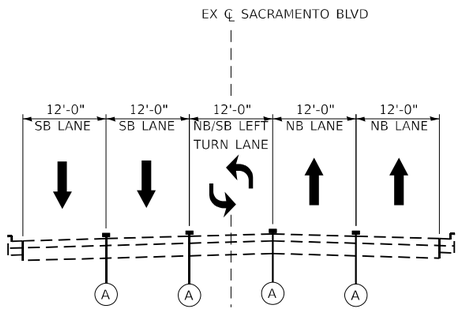

SACRAMENTO BLVD – EXISTING

(AT BRIDGE, LOOKING NORTH)

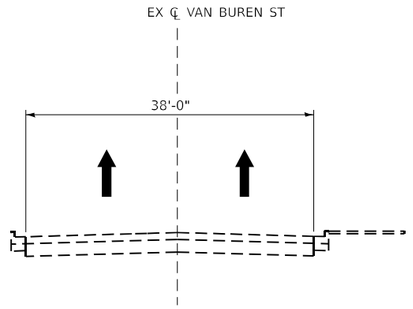

VAN BUREN ST – EXISTING

AT SACRAMENTO BLVD
(EAST LEG, LOOKING WEST)

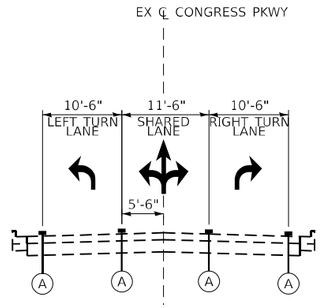

CONGRESS PKWY – EXISTING

AT SACRAMENTO BLVD
(WEST LEG, LOOKING EAST)

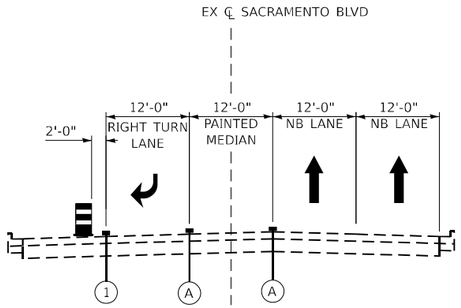

SACRAMENTO BLVD – STAGE 1 & 2

AT VAN BUREN ST
(NORTH LEG, LOOKING NORTH)

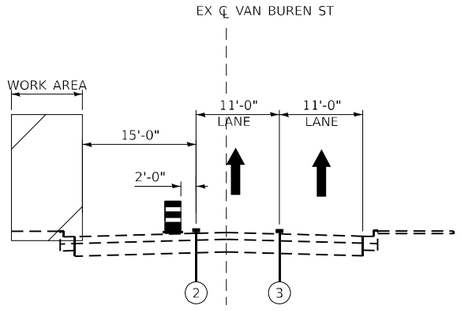

VAN BUREN ST – STAGE 1 & 2

AT SACRAMENTO BLVD
(EAST LEG, LOOKING WEST)

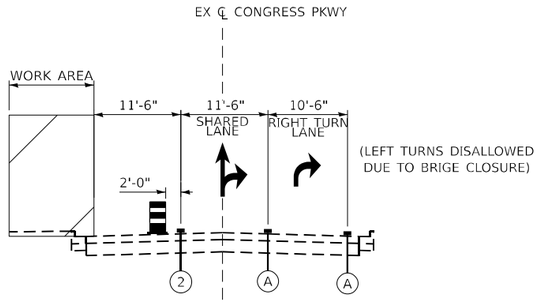

CONGRESS PKWY – STAGE 1 & 2

AT SACRAMENTO BLVD
(WEST LEG, LOOKING EAST)

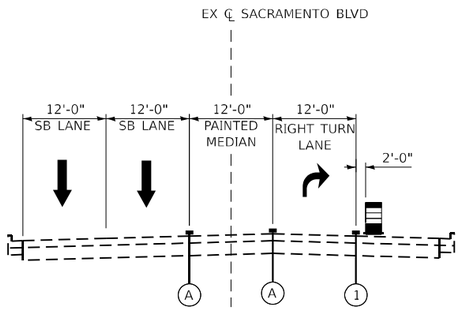

SACRAMENTO BLVD – STAGE 1 & 2

AT CONGRESS PKWY
(SOUTH LEG, LOOKING NORTH)

LEGEND

WORK AREA

DIRECTION OF TRAFFIC

DRUM OR TYPE II BARRICADE AT 50' C-C SPACING IN TANGENTS AND 25' SPACING IN TAPERS

(1) TEMPORARY PAVEMENT MARKING - LINE 4" - TAPE IV TYPE (SOLID WHITE)

(2) TEMPORARY PAVEMENT MARKING - LINE 4" - TAPE IV TYPE (SOLID YELLOW)

(3) TEMPORARY PAVEMENT MARKING - LINE 4" - TAPE IV TYPE (6' DASH - 18' SKIP WHITE)

(4) HMA SHOULDER RUBLE STRIP REMOVAL:
3' WIDTH
PR HMA SURFACE COURSE, MIX "D", IL-9.5, N70, 2"

(A) EXISTING PAVEMENT MARKING

FILE NAME = P:\10-ILL1411-0\DT - Sacramento and Paulina over I-290\Work\CADD\Sacramento - Contract 62K65\CADD_Sheets\D162K65-sht-staging-03-syp.dgn

COLLINS ENGINEERS INC.

USER NAME = omartinez	DESIGNED - OM	REVISED -	
	DRAWN - OM	REVISED -	
PLOT SCALE = 40.0000 ' / in.	CHECKED - RG	REVISED -	
PLOT DATE = 10/15/2025	DATE - 09/12/2025	REVISED -	

STATE OF ILLINOIS
DEPARTMENT OF TRANSPORTATION

FAI–290 (EISENHOWER EXPRESSWAY) AT SACRAMENTO BOULEVARD
MAINTENANCE OF TRAFFIC – TYPICAL SECTIONS

SCALE: NTS | SHEET NO. 2 OF 2 SHEETS | STA. | TO STA.

F.A.I. RTE.	SECTION	COUNTY	TOTAL SHEETS	SHEET NO.
290	2019-192-B-R	COOK	237	57
		CONTRACT NO. 62K65		
FED. ROAD DIST. NO.	ILLINOIS	FED. AID PROJECT		

ADVANCED SIGNING DETAIL – I–290 EASTBOUND – STAGE 1

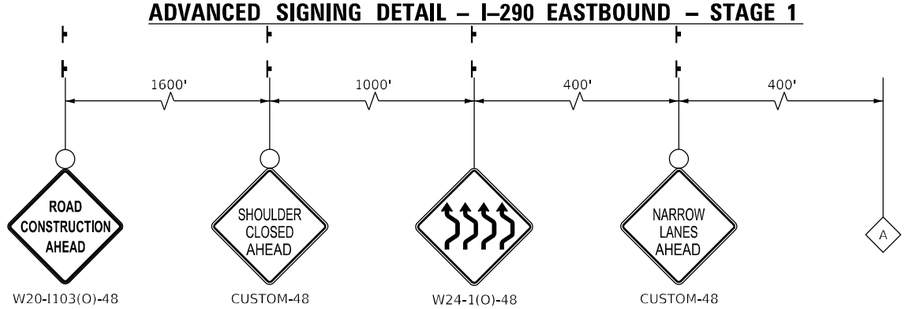

W20-I103(O)-48 | CUSTOM-48 | W24-1(O)-48 | CUSTOM-48

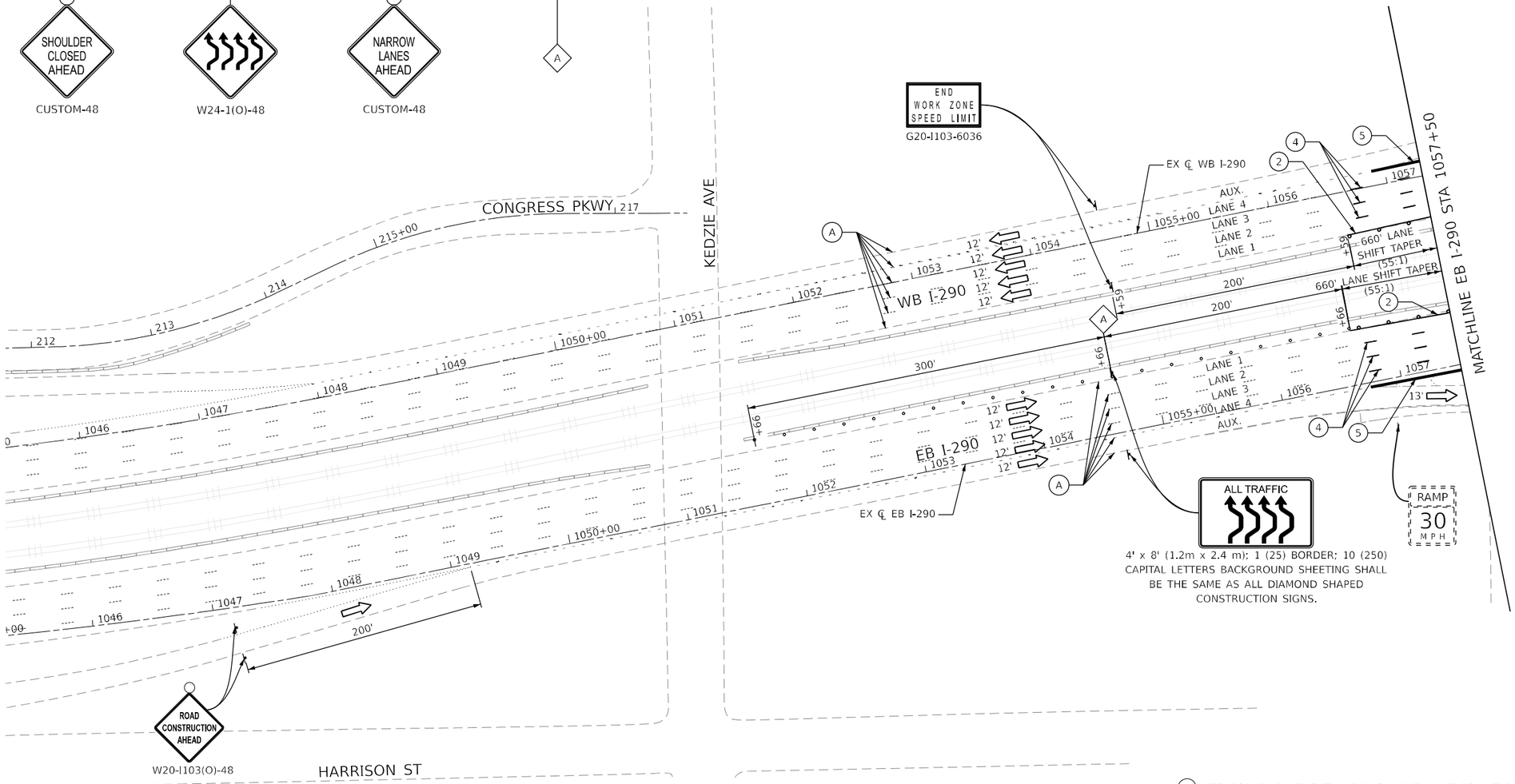

4' x 8' (1.2m x 2.4 m); 1 (25) BORDER; 10 (250) CAPITAL LETTERS BACKGROUND SHEETING SHALL BE THE SAME AS ALL DIAMOND SHAPED CONSTRUCTION SIGNS.

LEGEND

- WORK AREA
- DIRECTION OF TRAFFIC
- TEMPORARY CONCRETE BARRIER (CONTINOUSLY PINNED) WITH MONO-DIRECTIONAL TYPE C REFLECTORS PER STD 704001 AND STD 782006
- SIGN ON PORTABLE OR PERMANENT SUPPORT
- ARROW BOARD
- TYPE III BARRICADE WITH TWO FLASHING BEACONS
- DRUMS SPACED 100' C-C OR AS NOTED: DRUMS IN TAPER (50' C-C) DRUMS IN RADII (25' C-C)
- IMPACT ATTENUATOR, TEMPORARY (FULLY REDIRECTIVE, NARROW) TEST LEVEL 3

1. TEMPORARY PAVEMENT MARKING - LINE 4" - TAPE IV TYPE (SOLID WHITE)
2. TEMPORARY PAVEMENT MARKING - LINE 4" - TAPE IV TYPE (SOLID YELLOW)
3. TEMPORARY PAVEMENT MARKING - LINE 4" - TAPE IV TYPE (DOUBLE YELLOW)
4. TEMPORARY PAVEMENT MARKING - LINE 5" - TAPE IV TYPE (10' DASH - 30' SKIP WHITE)
5. TEMPORARY PAVEMENT MARKING - LINE 8" - TAPE IV TYPE (SOLID WHITE)
6. TEMPORARY PAVEMENT MARKING - LINE 12" - TAPE IV TYPE (SOLID WHITE)
7. TEMPORARY PAVEMENT MARKING LETTERS AND SYMBOLS - TYPE IV TAPE
8. TEMPORARY PAVEMENT MARKING - LINE 4" - TAPE IV TYPE (6' DASH - 18' SKIP WHITE)

A. EXISTING PAVEMENT MARKING

FILE NAME = P:\10-IL11411-0\DOT - Sacramento and Paulina over I-290\Work\CADD\Sacramento - Contract 62K65\CADD_Sheets\D162K65-sht-staging-04-stg1_I290.dgn

COLLINS ENGINEERS INC.

USER NAME = omartinez	DESIGNED - OM	REVISED -	
	DRAWN - OM	REVISED -	
PLOT SCALE = 100.0000 ' / in.	CHECKED - RG	REVISED -	
PLOT DATE = 10/15/2025	DATE - 09/12/2025	REVISED -	

STATE OF ILLINOIS
DEPARTMENT OF TRANSPORTATION

FAI–290 (EISENHOWER EXPRESSWAY) AT SACRAMENTO BOULEVARD
MAINTENANCE OF TRAFFIC PLAN – STAGE 1

SCALE: 1' = 50" | SHEET NO. 1 OF 8 SHEETS | STA. | TO STA.

F.A.I. RTE.	SECTION	COUNTY	TOTAL SHEETS	SHEET NO.
290	2019-192-B-R	COOK	237	58
		CONTRACT NO. 62K65		
FED. ROAD DIST. NO.	ILLINOIS	FED. AID PROJECT		

N

0 50 100

SCALE IN FEET

SEE NOTE 1

SACRAMENTO BLVD

RICHMOND ST

FRANCISCO AVE

VAN BUREN ST

MATCHLINE EB I-290 STA 1072+50

MATCHLINE EB I-290 STA 1057+50

ALBANY AVE

CONGRESS PKWY

EX ℄ WB I-290

EX ℄ EB I-290

WB I-290

EB I-290

SHOULDER RUMBLE STRIP REMOVAL
COMPLETED IN PRE-STAGE 1

660' LANE SHIFT TAPER (55:1)

660' LANE SHIFT TAPER (CONT.) (55:1)

12:1 TAPER

LANE 1
LANE 2
LANE 3
LANE 4

W1-6R(O)-6030
PLACED ABOVE
TYPE III BARRICADE
WITH FLASHING LIGHTS

EXIT 28 A
Damen Ave
1 MILE

EXIT 27 C
Western Ave
1/4 MILE

REMOVE AND SAFELY
STORE EXISTING SIGN
(APPROX. 186"x102")

REMOVE AND SAFELY
STORE EXISTING SIGN
(APPROX. 204"x102")

CUSTOM-84x42
POST MOUNTED
BREAKAWAY
DESIGN

CUSTOM-90x42
POST MOUNTED
BREAKAWAY
DESIGN

LEGEND

- WORK AREA
- DIRECTION OF TRAFFIC
- TEMPORARY CONCRETE BARRIER (CONTINOUSLY PINNED) WITH MONO-DIRECTIONAL TYPE C REFLECTORS PER STD 704001 AND STD 782006
- SIGN ON PORTABLE OR PERMANENT SUPPORT
- ARROW BOARD
- TYPE III BARRICADE WITH TWO FLASHING BEACONS
- DRUMS SPACED 100' C-C OR AS NOTED:
  DRUMS IN TAPER (50' C-C)
  DRUMS IN RADII (25' C-C)
- IMPACT ATTENUATOR, TEMPORARY (FULLY REDIRECTIVE, NARROW) TEST LEVEL 3

NOTES

1. SEE SACRAMENTO BLVD MAINTENANCE OF TRAFFIC SHEETS FOR STAGING DETAILS.

(1) TEMPORARY PAVEMENT MARKING - LINE 4" - TAPE IV TYPE (SOLID WHITE)
(2) TEMPORARY PAVEMENT MARKING - LINE 4" - TAPE IV TYPE (SOLID YELLOW)
(3) TEMPORARY PAVEMENT MARKING - LINE 4" - TAPE IV TYPE (DOUBLE YELLOW)
(4) TEMPORARY PAVEMENT MARKING - LINE 5" - TAPE IV TYPE (10' DASH - 30' SKIP WHITE)
(5) TEMPORARY PAVEMENT MARKING - LINE 8" - TAPE IV TYPE (SOLID WHITE)
(6) TEMPORARY PAVEMENT MARKING - LINE 12" - TAPE IV TYPE (SOLID WHITE)
(7) TEMPORARY PAVEMENT MARKING LETTERS AND SYMBOLS - TYPE IV TAPE
(8) TEMPORARY PAVEMENT MARKING - LINE 4" - TAPE IV TYPE (6' DASH - 18' SKIP WHITE)
(A) EXISTING PAVEMENT MARKING

FILE NAME = P:\10-IL\14111-IDOT - Sacramento and Paulina over I-290\Work\CADD\Sacramento - Contract 62K65\CADD_Sheets\SD162K65-sht-staging-01-stg1_I290.dgn

COLLINS ENGINEERS INC

USER NAME = omartinez	DESIGNED - OM	REVISED -	
	DRAWN - OM	REVISED -	
PLOT SCALE = 100.0000 ' / in.	CHECKED - RG	REVISED -	
PLOT DATE = 10/15/2025	DATE - 09/12/2025	REVISED -	

STATE OF ILLINOIS
DEPARTMENT OF TRANSPORTATION

FAI-290 (EISENHOWER EXPRESSWAY) AT SACRAMENTO BOULEVARD
MAINTENANCE OF TRAFFIC PLAN – STAGE 1

SCALE: 1" = 50' | SHEET NO. 2 OF 8 SHEETS | STA. | TO STA.

F.A.I. RTE.	SECTION	COUNTY	TOTAL SHEETS	SHEET NO.
290	2019-192-B-R	COOK	237	59
		CONTRACT NO. 62K65		
FED. ROAD DIST. NO.	ILLINOIS	FED. AID PROJECT		

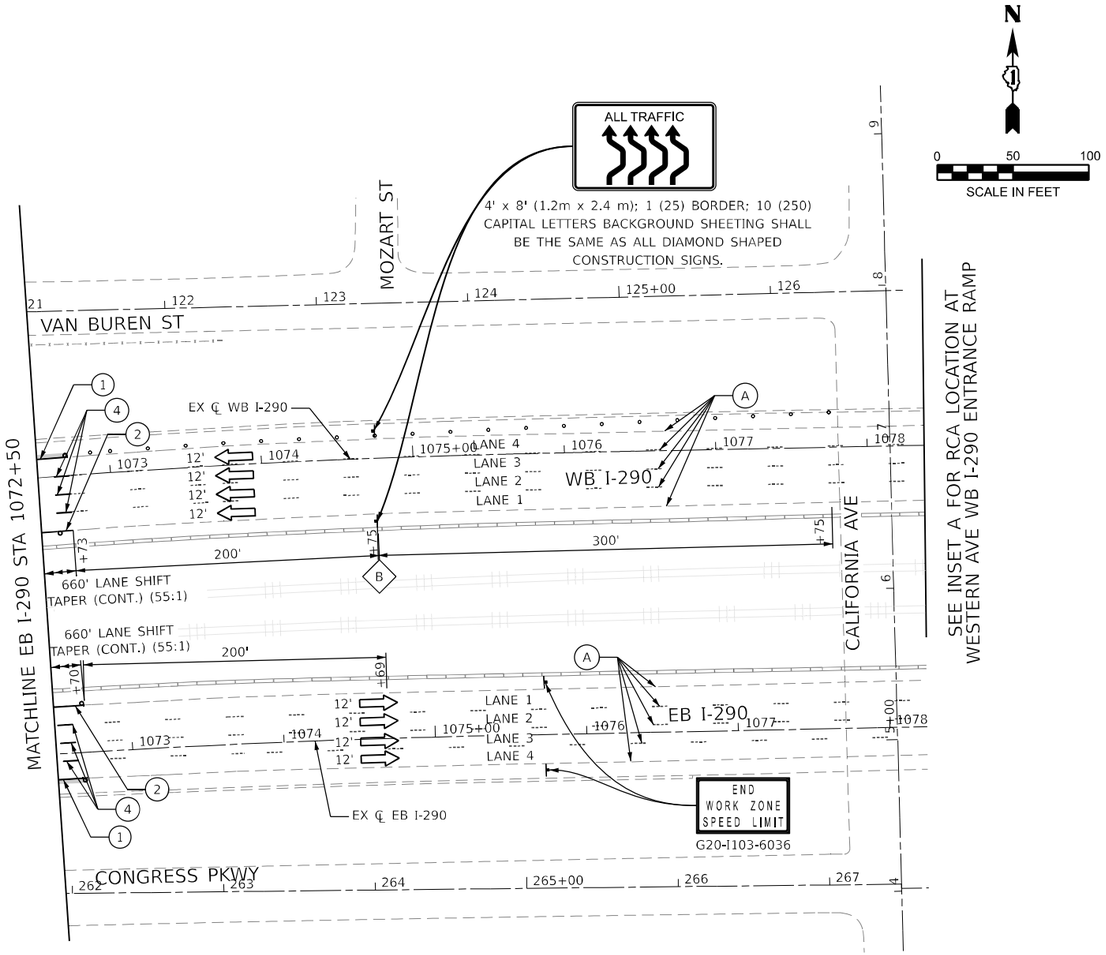

ADVANCED SIGNING DETAIL – I–290 WESTBOUND – STAGE 1

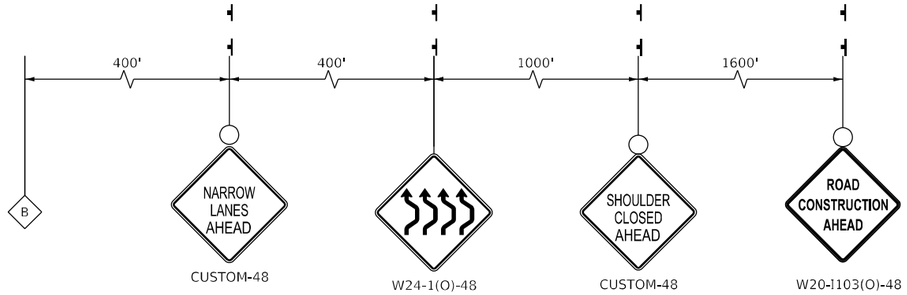

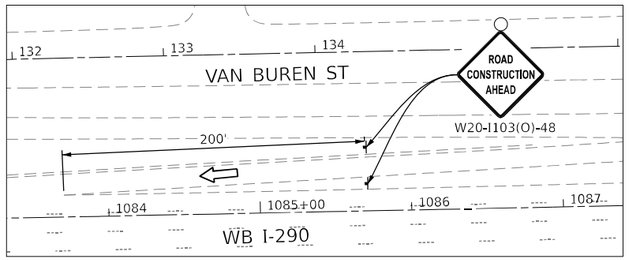

INSET A -
WESTERN AVE WB I-290 ENTRANCE RAMP

LEGEND

- WORK AREA
- DIRECTION OF TRAFFIC
- TEMPORARY CONCRETE BARRIER (CONTINOUSLY PINNED) WITH MONO-DIRECTIONAL TYPE C REFLECTORS PER STD 704001 AND STD 782006
- SIGN ON PORTABLE OR PERMANENT SUPPORT
- ARROW BOARD
- TYPE III BARRICADE WITH TWO FLASHING BEACONS
- DRUMS SPACED 100' C-C OR AS NOTED: DRUMS IN TAPER (50' C-C) DRUMS IN RADII (25' C-C)
- IMPACT ATTENUATOR, TEMPORARY (FULLY REDIRECTIVE, NARROW) TEST LEVEL 3

(1) TEMPORARY PAVEMENT MARKING - LINE 4" - TAPE IV TYPE (SOLID WHITE)
(2) TEMPORARY PAVEMENT MARKING - LINE 4" - TAPE IV TYPE (SOLID YELLOW)
(3) TEMPORARY PAVEMENT MARKING - LINE 4" - TAPE IV TYPE (DOUBLE YELLOW)
(4) TEMPORARY PAVEMENT MARKING - LINE 5" - TAPE IV TYPE (10' DASH - 30' SKIP WHITE)
(5) TEMPORARY PAVEMENT MARKING - LINE 8" - TAPE IV TYPE (SOLID WHITE)
(6) TEMPORARY PAVEMENT MARKING - LINE 12" - TAPE IV TYPE (SOLID WHITE)
(7) TEMPORARY PAVEMENT MARKING LETTERS AND SYMBOLS - TYPE IV TAPE
(8) TEMPORARY PAVEMENT MARKING - LINE 4" - TAPE IV TYPE (6' DASH - 18' SKIP WHITE)
(A) EXISTING PAVEMENT MARKING

FILE NAME = P:\10-ILL\14411-IDOT - Sacramento and Paulina over I-290\Work\CADD\Sacramento - Contract 62K65\CADD_Sheets\D162K65-sht-staging-04-stg1_I290.dgn

COLLINS ENGINEERS INC.

USER NAME = omartinez	DESIGNED - OM	REVISED -	
	DRAWN - OM	REVISED -	
PLOT SCALE = 100.0000 ' / in.	CHECKED - RG	REVISED -	
PLOT DATE = 10/15/2025	DATE - 09/12/2025	REVISED -	

STATE OF ILLINOIS
DEPARTMENT OF TRANSPORTATION

FAI–290 (EISENHOWER EXPRESSWAY) AT SACRAMENTO BOULEVARD
MAINTENANCE OF TRAFFIC PLAN – STAGE 1

SCALE: 1' = 50" | SHEET NO. 3 OF 8 SHEETS | STA. | TO STA.

F.A.I. RTE.	SECTION	COUNTY	TOTAL SHEETS	SHEET NO.
290	2019-192-B-R	COOK	237	60
		CONTRACT NO. 62K65		
FED. ROAD DIST. NO.	ILLINOIS	FED. AID PROJECT		

ADVANCED SIGNING DETAIL – I–290 EASTBOUND – STAGE 2

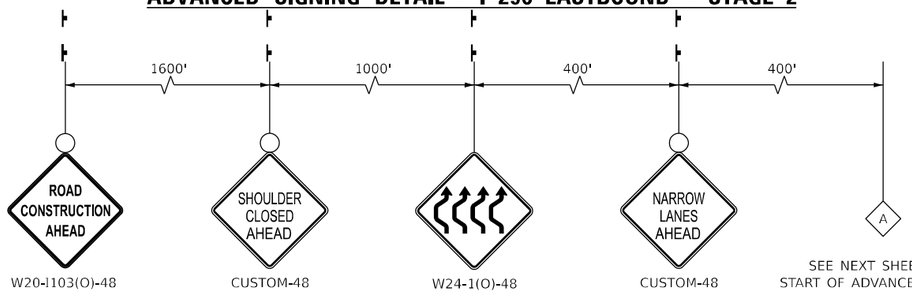

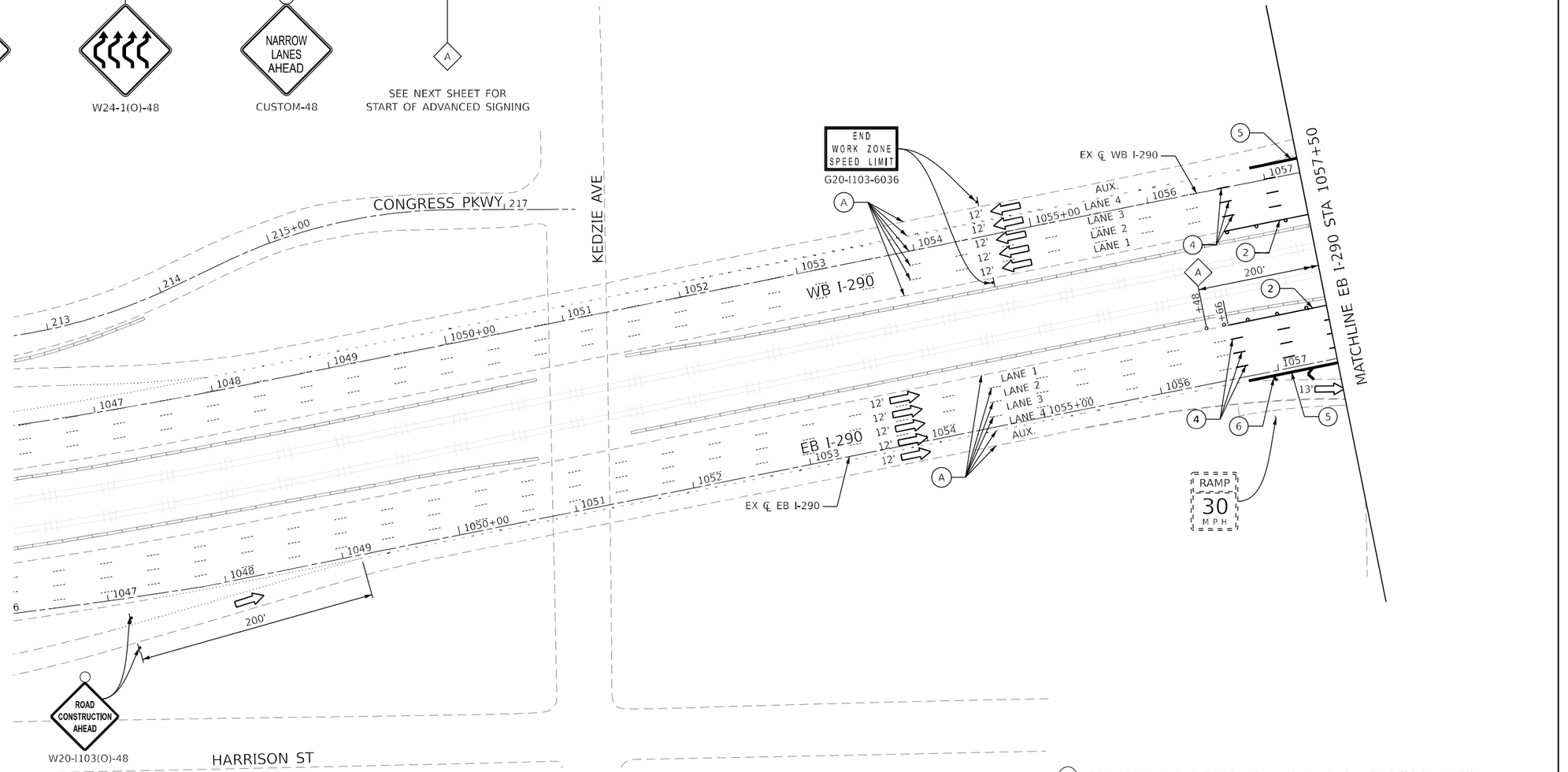

LEGEND

- WORK AREA
- DIRECTION OF TRAFFIC
- TEMPORARY CONCRETE BARRIER (CONTINOUSLY PINNED) WITH MONO-DIRECTIONAL TYPE C REFLECTORS PER STD 704001 AND STD 782006
- SIGN ON PORTABLE OR PERMANENT SUPPORT
- ARROW BOARD
- TYPE III BARRICADE WITH TWO FLASHING BEACONS
- DRUMS SPACED 100' C-C OR AS NOTED:
  DRUMS IN TAPER (50' C-C)
  DRUMS IN RADII (25' C-C)
- IMPACT ATTENUATOR, TEMPORARY (FULLY REDIRECTIVE, NARROW) TEST LEVEL 3

1. TEMPORARY PAVEMENT MARKING - LINE 4" - TAPE IV TYPE (SOLID WHITE)
2. TEMPORARY PAVEMENT MARKING - LINE 4" - TAPE IV TYPE (SOLID YELLOW)
3. TEMPORARY PAVEMENT MARKING - LINE 4" - TAPE IV TYPE (DOUBLE YELLOW)
4. TEMPORARY PAVEMENT MARKING - LINE 5" - TAPE IV TYPE (10' DASH - 30' SKIP WHITE)
5. TEMPORARY PAVEMENT MARKING - LINE 8" - TAPE IV TYPE (SOLID WHITE)
6. TEMPORARY PAVEMENT MARKING - LINE 12" - TAPE IV TYPE (SOLID WHITE)
7. TEMPORARY PAVEMENT MARKING LETTERS AND SYMBOLS - TYPE IV TAPE
8. TEMPORARY PAVEMENT MARKING - LINE 4" - TAPE IV TYPE (6' DASH - 18' SKIP WHITE)

A. EXISTING PAVEMENT MARKING

FILE NAME = P:\10-IL11411-0\DOT - Sacramento and Paulina over I-290\Work\CADD\Sacramento - Contract 62K65\CADD_Sheets\D162K65-sht-staging-05-stg2_I290.dgn

COLLINS ENGINEERS INC.

USER NAME = omartinez	DESIGNED - OM	REVISED -	
	DRAWN - OM	REVISED -	
PLOT SCALE = 100.0000 ' / in.	CHECKED - RG	REVISED -	
PLOT DATE = 10/15/2025	DATE - 09/12/2025	REVISED -	

STATE OF ILLINOIS
DEPARTMENT OF TRANSPORTATION

FAI–290 (EISENHOWER EXPRESSWAY) AT SACRAMENTO BOULEVARD
MAINTENANCE OF TRAFFIC PLAN – STAGE 2

SCALE: 1' = 50" | SHEET NO. 4 OF 8 SHEETS | STA. | TO STA.

F.A.I. RTE.	SECTION	COUNTY	TOTAL SHEETS	SHEET NO.
290	2019-192-B-R	COOK	237	61
		CONTRACT NO. 62K65		
FED. ROAD DIST. NO.	ILLINOIS	FED. AID PROJECT		

N

0 50 100
SCALE IN FEET

SEE NOTE 1

SACRAMENTO BLVD

RICHMOND ST

ALL TRAFFIC

4' x 8' (1.2m x 2.4 m); 1 (25) BORDER; 10 (250) CAPITAL LETTERS BACKGROUND SHEETING SHALL BE THE SAME AS ALL DIAMOND SHAPED CONSTRUCTION SIGNS.

FRANCISCO AVE

VAN BUREN ST

W1-6L(O)-6030 PLACED ABOVE TYPE III BARRICADE WITH FLASHING LIGHTS

220' LANE SHIFT TAPER (55:1)

12:1 TAPER

WB I-290

SHOULDER RUMBLE STRIP REMOVAL COMPLETED IN PRE-STAGE 1

EX ℄ WB I-290

EX ℄ EB I-290

EB I-290

MATCHLINE EB I-290 STA 1057+50

MATCHLINE EB I-290 STA 1072+50

ALBANY AVE

CONGRESS PKWY

EXIT 28 A
Damen Ave
1 MILE
PLACED IN STAGE 1

EXIT 27 C
Western Ave
1/4 MILE
PLACED IN STAGE 1

NOTES

1. SEE SACRAMENTO BLVD MAINTENANCE OF TRAFFIC SHEETS FOR STAGING DETAILS.

LEGEND

- WORK AREA
- DIRECTION OF TRAFFIC
- TEMPORARY CONCRETE BARRIER (CONTINOUSLY PINNED) WITH MONO-DIRECTIONAL TYPE C REFLECTORS PER STD 704001 AND STD 782006
- SIGN ON PORTABLE OR PERMANENT SUPPORT
- ARROW BOARD
- TYPE III BARRICADE WITH TWO FLASHING BEACONS
- DRUMS SPACED 100' C-C OR AS NOTED: DRUMS IN TAPER (50' C-C) DRUMS IN RADII (25' C-C)
- IMPACT ATTENUATOR, TEMPORARY (FULLY REDIRECTIVE, NARROW) TEST LEVEL 3

(1) TEMPORARY PAVEMENT MARKING - LINE 4" - TAPE IV TYPE (SOLID WHITE)
(2) TEMPORARY PAVEMENT MARKING - LINE 4" - TAPE IV TYPE (SOLID YELLOW)
(3) TEMPORARY PAVEMENT MARKING - LINE 4" - TAPE IV TYPE (DOUBLE YELLOW)
(4) TEMPORARY PAVEMENT MARKING - LINE 5" - TAPE IV TYPE (10' DASH - 30' SKIP WHITE)
(5) TEMPORARY PAVEMENT MARKING - LINE 8" - TAPE IV TYPE (SOLID WHITE)
(6) TEMPORARY PAVEMENT MARKING - LINE 12" - TAPE IV TYPE (SOLID WHITE)
(7) TEMPORARY PAVEMENT MARKING LETTERS AND SYMBOLS - TYPE IV TAPE
(8) TEMPORARY PAVEMENT MARKING - LINE 4" - TAPE IV TYPE (6' DASH - 18' SKIP WHITE)
(A) EXISTING PAVEMENT MARKING

FILE NAME = P:\10-ILI1411-IDOT - Sacramento and Paulina over I-290\Work\CADD\Sacramento - Contract 62K65\CADD_Sheets\D16ZK65-sht-staging-05-stg2_I290.dgn

COLLINS ENGINEERS INC.

USER NAME = omartinez	DESIGNED - OM	REVISED -	
	DRAWN - OM	REVISED -	
PLOT SCALE = 100.0000 ' / in.	CHECKED - RG	REVISED -	
PLOT DATE = 10/15/2025	DATE - 09/12/2025	REVISED -	

STATE OF ILLINOIS
DEPARTMENT OF TRANSPORTATION

FAI-290 (EISENHOWER EXPRESSWAY) AT SACRAMENTO BOULEVARD
MAINTENANCE OF TRAFFIC PLAN – STAGE 2

SCALE: 1" = 50' | SHEET NO. 5 OF 8 SHEETS | STA. | TO STA.

F.A.I. RTE.	SECTION	COUNTY	TOTAL SHEETS	SHEET NO.
290	2019-192-B-R	COOK	237	62
		CONTRACT NO. 62K65		
FED. ROAD DIST. NO.	ILLINOIS	FED. AID PROJECT		

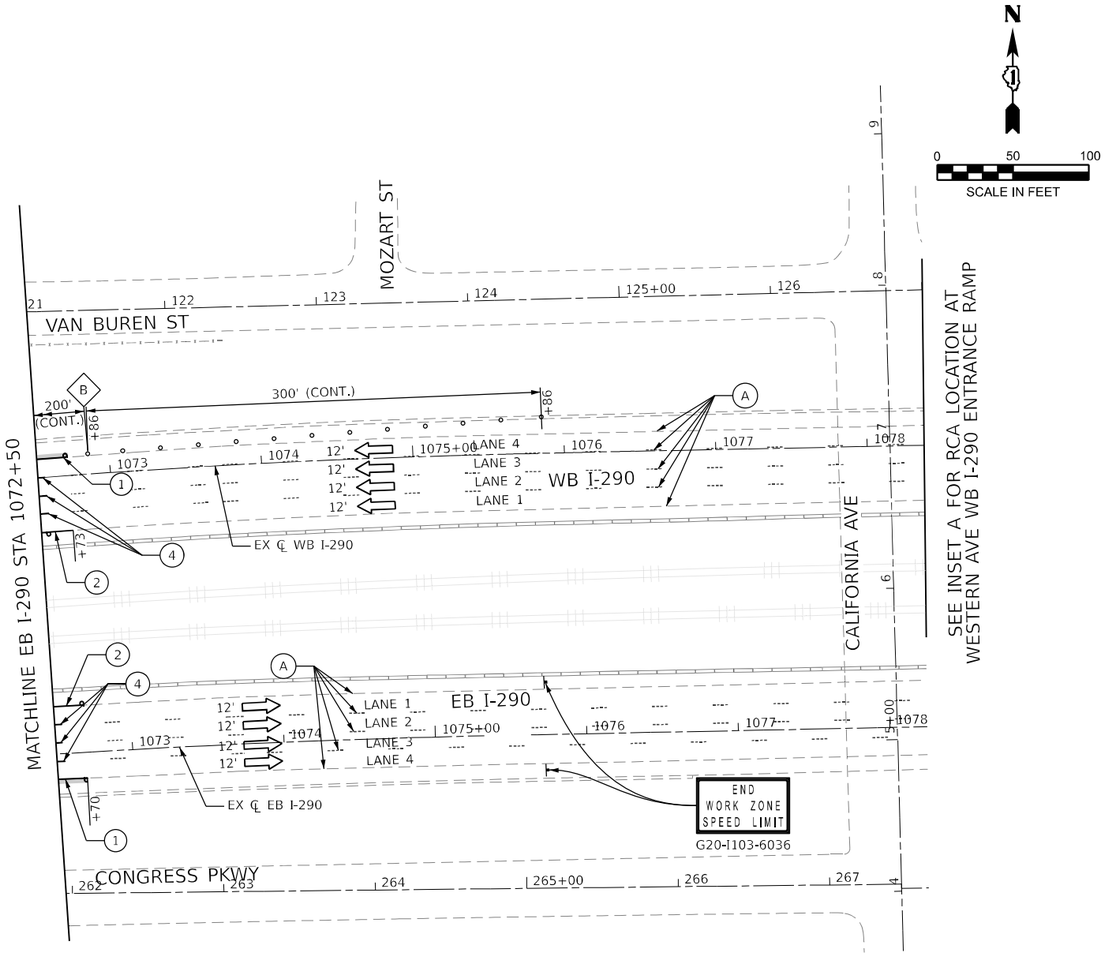

ADVANCED SIGNING DETAIL – I–290 WESTBOUND – STAGE 2

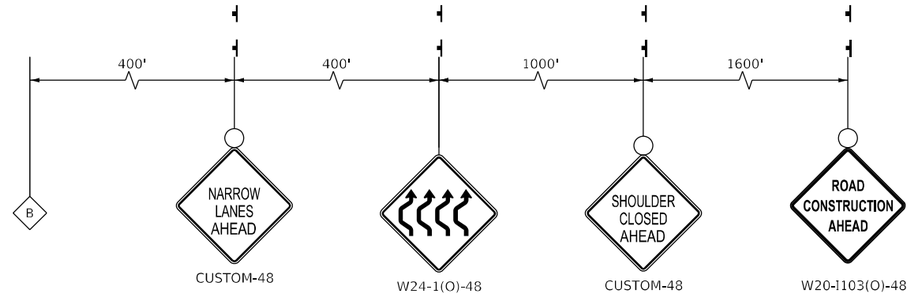

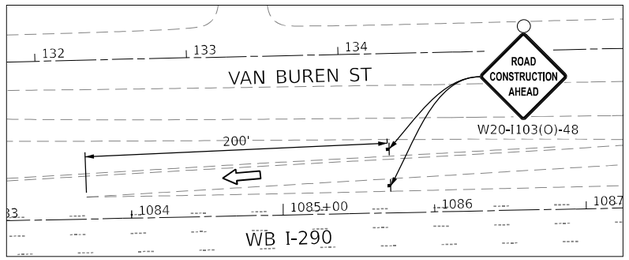

INSET A -
WESTERN AVE WB I-290 ENTRANCE RAMP

LEGEND

- WORK AREA
- DIRECTION OF TRAFFIC
- TEMPORARY CONCRETE BARRIER (CONTINOUSLY PINNED) WITH MONO-DIRECTIONAL TYPE C REFLECTORS PER STD 704001 AND STD 782006
- SIGN ON PORTABLE OR PERMANENT SUPPORT
- ARROW BOARD
- TYPE III BARRICADE WITH TWO FLASHING BEACONS
- DRUMS SPACED 100' C-C OR AS NOTED: DRUMS IN TAPER (50' C-C) DRUMS IN RADII (25' C-C)
- IMPACT ATTENUATOR, TEMPORARY (FULLY REDIRECTIVE, NARROW) TEST LEVEL 3

1. TEMPORARY PAVEMENT MARKING - LINE 4" - TAPE IV TYPE (SOLID WHITE)
2. TEMPORARY PAVEMENT MARKING - LINE 4" - TAPE IV TYPE (SOLID YELLOW)
3. TEMPORARY PAVEMENT MARKING - LINE 4" - TAPE IV TYPE (DOUBLE YELLOW)
4. TEMPORARY PAVEMENT MARKING - LINE 5" - TAPE IV TYPE (10' DASH - 30' SKIP WHITE)
5. TEMPORARY PAVEMENT MARKING - LINE 8" - TAPE IV TYPE (SOLID WHITE)
6. TEMPORARY PAVEMENT MARKING - LINE 12" - TAPE IV TYPE (SOLID WHITE)
7. TEMPORARY PAVEMENT MARKING LETTERS AND SYMBOLS - TYPE IV TAPE
8. TEMPORARY PAVEMENT MARKING - LINE 4" - TAPE IV TYPE (6' DASH - 18' SKIP WHITE)
- A. EXISTING PAVEMENT MARKING

COLLINS ENGINEERS INC.

USER NAME = omartinez	DESIGNED - OM	REVISED -
	DRAWN - OM	REVISED -
PLOT SCALE = 100.0000 ' / in.	CHECKED - RG	REVISED -
PLOT DATE = 10/15/2025	DATE - 09/12/2025	REVISED -

STATE OF ILLINOIS
DEPARTMENT OF TRANSPORTATION

FAI–290 (EISENHOWER EXPRESSWAY) AT SACRAMENTO BOULEVARD
MAINTENANCE OF TRAFFIC PLAN – STAGE 2

SCALE: 1' = 50" | SHEET NO. 6 OF 8 SHEETS | STA. | TO STA.

F.A.I. RTE.	SECTION	COUNTY	TOTAL SHEETS	SHEET NO.
290	2019-192-B-R	COOK	237	63
		CONTRACT NO. 62K65		
FED. ROAD DIST. NO.	ILLINOIS	FED. AID PROJECT		

FILE NAME = P:\10-IL\1411-IDOT - Sacramento and Paulina over I-290\Work\CADD\Sacramento - Contract 62K65\CADD_Sheets\D162K65-sht-staging-05-stge2_I290.dgn

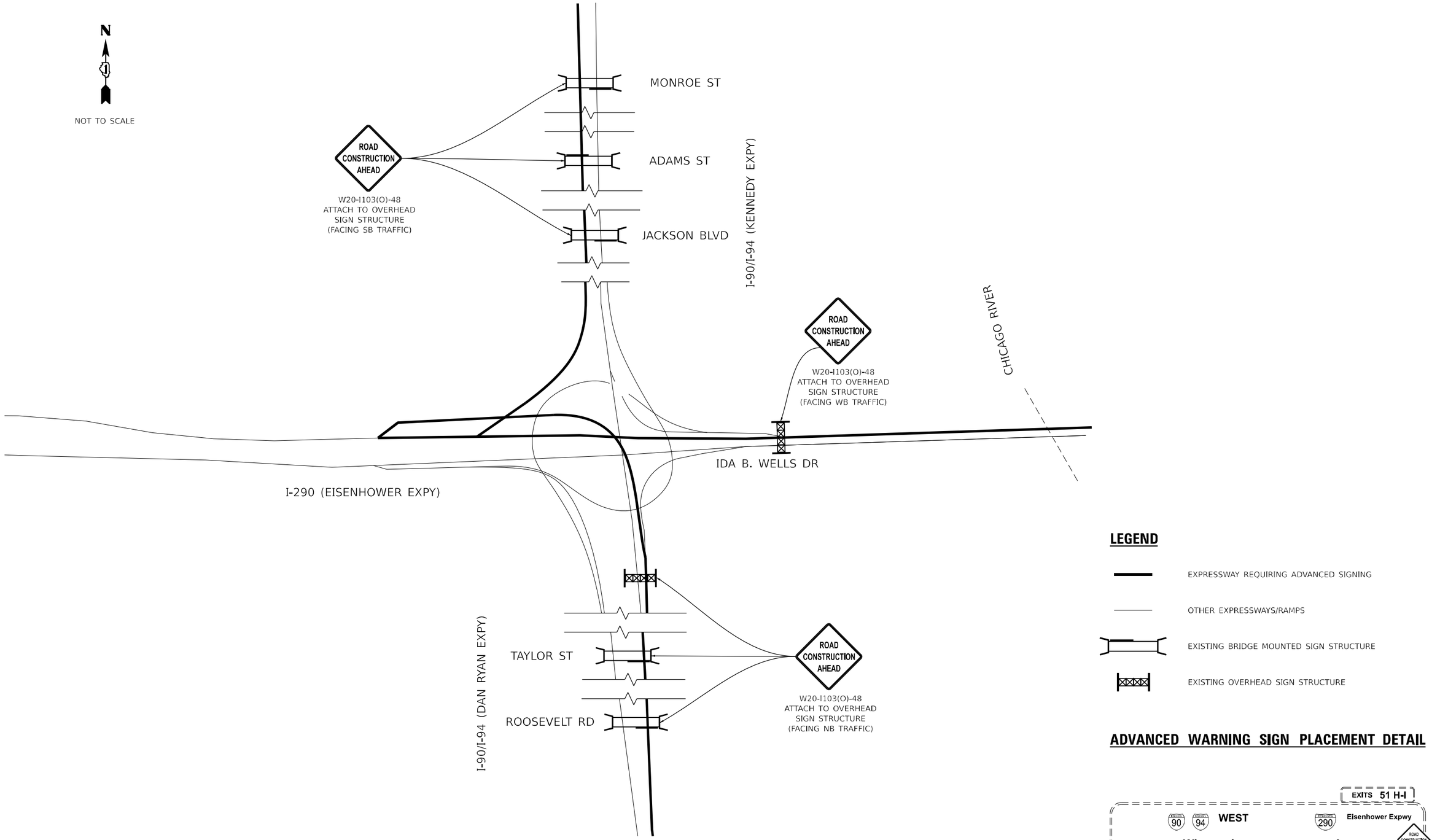

LEGEND

- EXPRESSWAY REQUIRING ADVANCED SIGNING
- OTHER EXPRESSWAYS/RAMPS
- EXISTING BRIDGE MOUNTED SIGN STRUCTURE
- EXISTING OVERHEAD SIGN STRUCTURE

ADVANCED WARNING SIGN PLACEMENT DETAIL

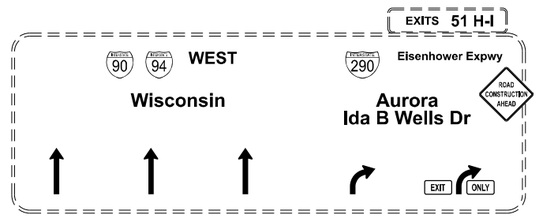

FILE NAME = P:\10-LL\1411-IDOT - Sacramento and Paulina over I-290\Work\CADD\Sacramento - Contract 62K65\CADD_Sheets\D3162K65-sht-staging-10-adv_signing.dgn

COLLINS ENGINEERS INC.

USER NAME = omartinez	DESIGNED - OM	REVISED -
	DRAWN - OM	REVISED -
PLOT SCALE = 40.0000 ' / in.	CHECKED - RG	REVISED -
PLOT DATE = 10/15/2025	DATE - 09/12/2025	REVISED -

STATE OF ILLINOIS
DEPARTMENT OF TRANSPORTATION

FAI–290 (EISENHOWER EXPRESSWAY) AT SACRAMENTO BOULEVARD
MAINTENANCE OF TRAFFIC – ADVANCED SIGNING

SCALE: NTS | SHEET NO. 1 OF 1 SHEETS | STA. | TO STA.

F.A.I. RTE.	SECTION	COUNTY	TOTAL SHEETS	SHEET NO.
290	2019-192-B-R	COOK	237	64
		CONTRACT NO. 62K65		
FED. ROAD DIST. NO.	ILLINOIS	FED. AID PROJECT		

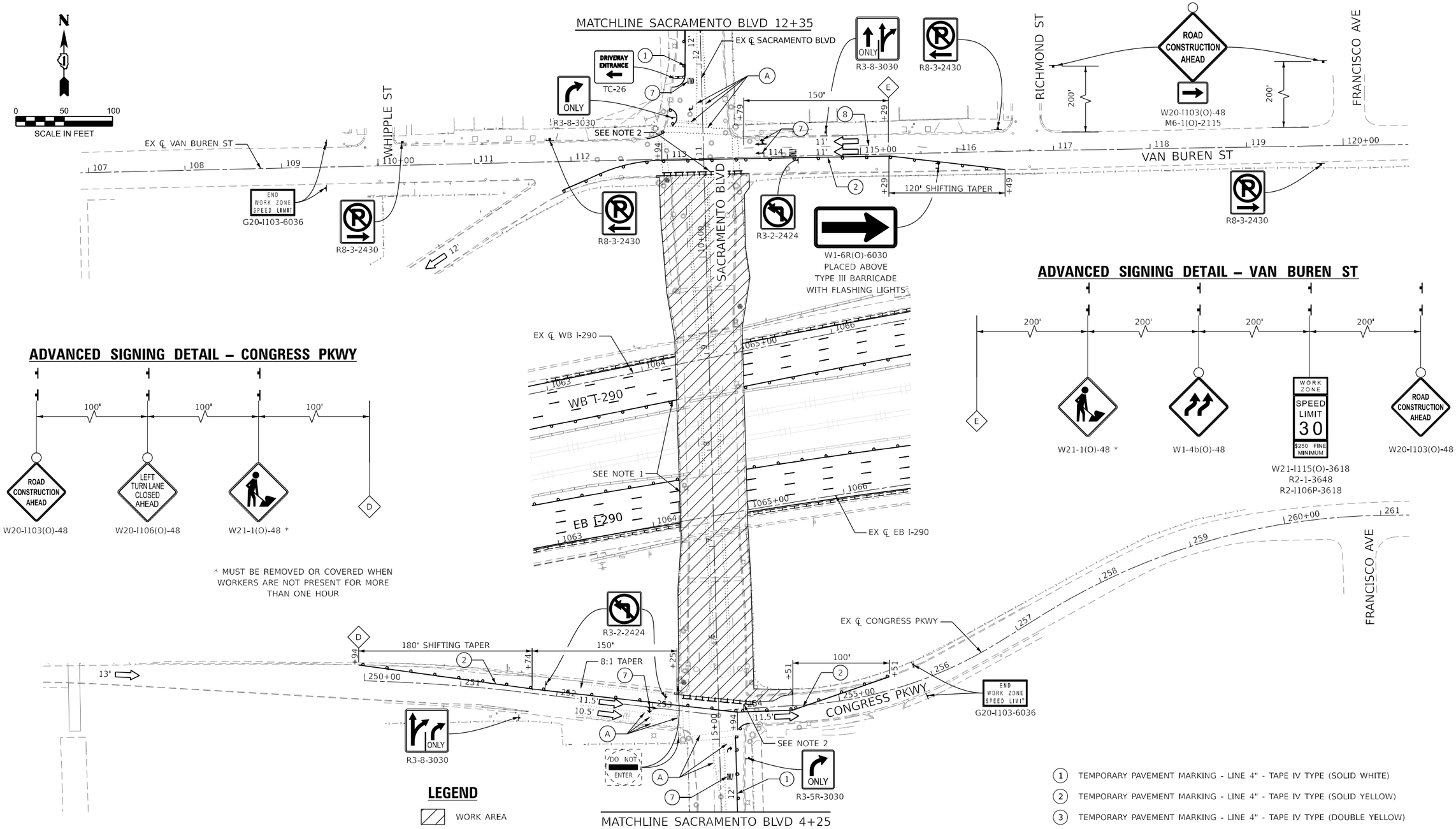

LEGEND

- WORK AREA
- DIRECTION OF TRAFFIC
- TEMPORARY CONCRETE BARRIER (CONTINOUSLY PINNED) WITH MONO-DIRECTIONAL TYPE C REFLECTORS PER STD 704001 AND STD 782006
- SIGN ON PORTABLE OR PERMANENT SUPPORT
- ARROW BOARD
- TYPE III BARRICADE WITH TWO FLASHING BEACONS
- DRUMS SPACED 100' C-C OR AS NOTED: DRUMS IN TAPER (50' C-C) DRUMS IN RADII (25' C-C)
- IMPACT ATTENUATOR, TEMPORARY (FULLY REDIRECTIVE, NARROW) TEST LEVEL 3

NOTES

1. SEE I-290 MAINTENANCE OF TRAFFIC SHEETS FOR STAGING DETAILS.
2. SACRAMENTO BLVD CLOSED TO TRAFFIC DURING STAGE 1-2. SEE DETOUR PLANS.

1. TEMPORARY PAVEMENT MARKING - LINE 4" - TAPE IV TYPE (SOLID WHITE)
2. TEMPORARY PAVEMENT MARKING - LINE 4" - TAPE IV TYPE (SOLID YELLOW)
3. TEMPORARY PAVEMENT MARKING - LINE 4" - TAPE IV TYPE (DOUBLE YELLOW)
4. TEMPORARY PAVEMENT MARKING - LINE 5" - TAPE IV TYPE (10' DASH - 30' SKIP WHITE)
5. TEMPORARY PAVEMENT MARKING - LINE 8" - TAPE IV TYPE (SOLID WHITE)
6. TEMPORARY PAVEMENT MARKING - LINE 12" - TAPE IV TYPE (SOLID WHITE)
7. TEMPORARY PAVEMENT MARKING LETTERS AND SYMBOLS - TYPE IV TAPE
8. TEMPORARY PAVEMENT MARKING - LINE 4" - TAPE IV TYPE (6' DASH - 18' SKIP WHITE)

A. EXISTING PAVEMENT MARKING

FILE NAME = P:\10-IL14411-4\DOT - Sacramento and Paulina over I-290\Work\CADD\Sacramento - Contract 62K65\CADD_Sheets\D162K65-tfr-staging-08-stg1&2_Sacramento.dgn

COLLINS ENGINEERS INC.

USER NAME = amartinez	DESIGNED - OM	REVISED -	
	DRAWN - OM	REVISED -	
PLOT SCALE = 100.0000 ' / in.	CHECKED - RG	REVISED -	
PLOT DATE = 10/15/2025	DATE - 09/12/2025	REVISED -	

STATE OF ILLINOIS
DEPARTMENT OF TRANSPORTATION

FAI–290 (EISENHOWER EXPRESSWAY) AT SACRAMENTO BOULEVARD
SACRAMENTO BOULEVARD MAINTENANCE OF TRAFFIC PLAN

SCALE: 1" = 50" | SHEET NO. 7 OF 8 SHEETS | STA. | TO STA.

F.A.I. RTE.	SECTION	COUNTY	TOTAL SHEETS	SHEET NO.
290	2019-192-B-R	COOK	237	65
		CONTRACT NO. 62K65		
FED. ROAD DIST. NO.	ILLINOIS	FED. AID PROJECT		

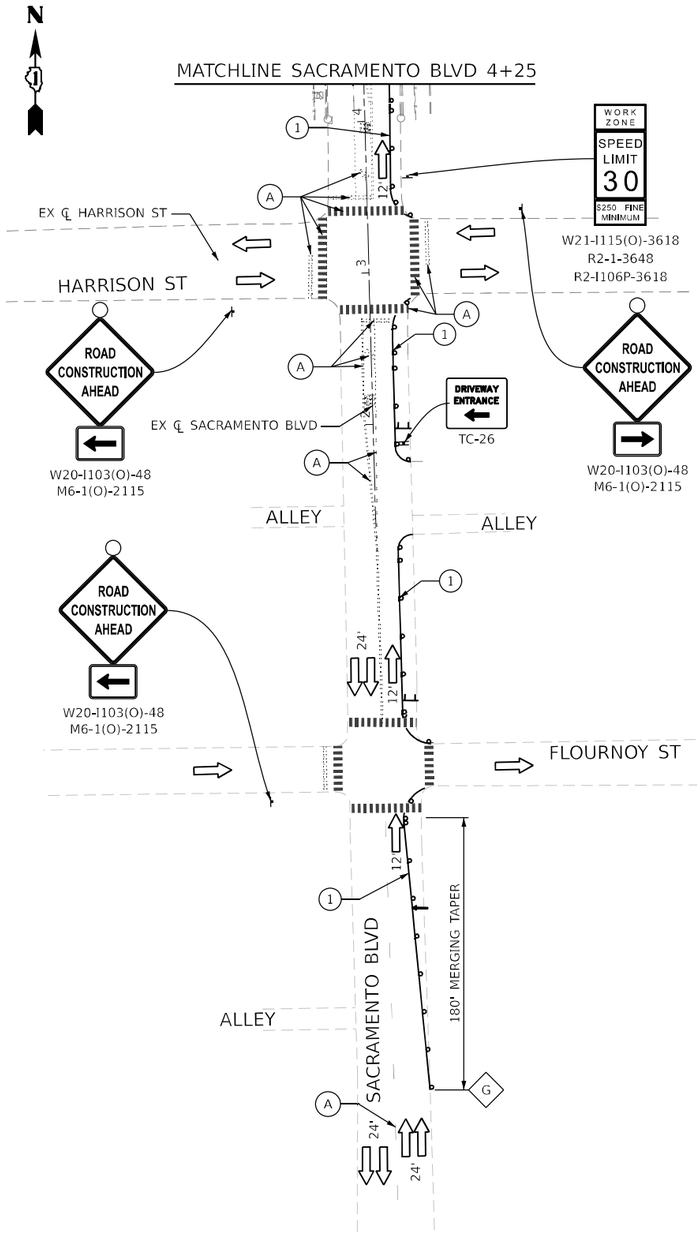

ADVANCED SIGNING DETAIL – SACRAMENTO BLVD NORTH OF VAN BUREN ST

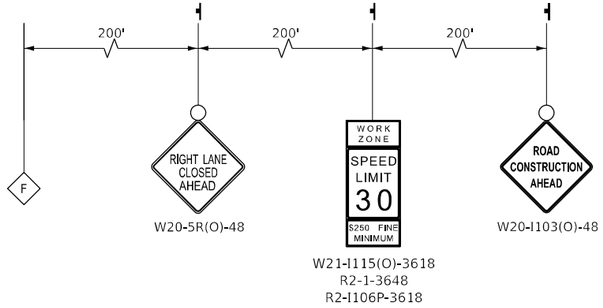

ADVANCED SIGNING DETAIL – SACRAMENTO BLVD SOUTH OF CONGRESS PKWY

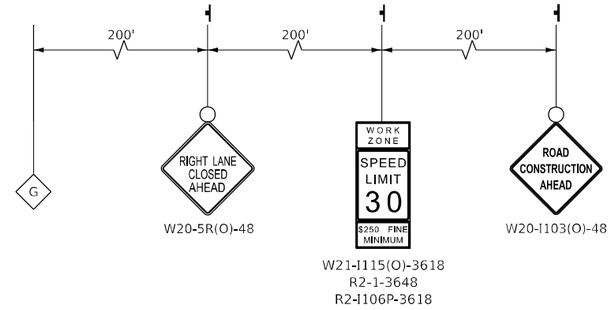

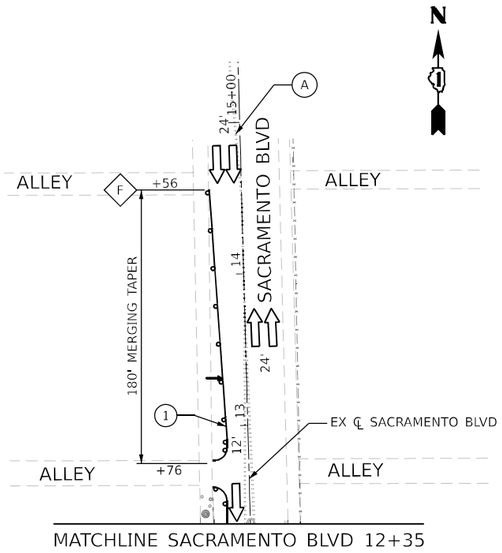

0 50 100
SCALE IN FEET

LEGEND

- WORK AREA
- DIRECTION OF TRAFFIC
- TEMPORARY CONCRETE BARRIER (CONTINOUSLY PINNED) WITH MONO-DIRECTIONAL TYPE C REFLECTORS PER STD 704001 AND STD 782006
- SIGN ON PORTABLE OR PERMANENT SUPPORT
- ARROW BOARD
- TYPE III BARRICADE WITH TWO FLASHING BEACONS
- DRUMS SPACED 100' C-C OR AS NOTED: DRUMS IN TAPER (50' C-C) DRUMS IN RADII (25' C-C)
- IMPACT ATTENUATOR, TEMPORARY (FULLY REDIRECTIVE, NARROW) TEST LEVEL 3

(1) TEMPORARY PAVEMENT MARKING - LINE 4" - TAPE IV TYPE (SOLID WHITE)
(2) TEMPORARY PAVEMENT MARKING - LINE 4" - TAPE IV TYPE (SOLID YELLOW)
(3) TEMPORARY PAVEMENT MARKING - LINE 4" - TAPE IV TYPE (DOUBLE YELLOW)
(4) TEMPORARY PAVEMENT MARKING - LINE 5" - TAPE IV TYPE (10' DASH - 30' SKIP WHITE)
(5) TEMPORARY PAVEMENT MARKING - LINE 8" - TAPE IV TYPE (SOLID WHITE)
(6) TEMPORARY PAVEMENT MARKING - LINE 12" - TAPE IV TYPE (SOLID WHITE)
(7) TEMPORARY PAVEMENT MARKING LETTERS AND SYMBOLS - TYPE IV TAPE
(8) TEMPORARY PAVEMENT MARKING - LINE 4" - TAPE IV TYPE (6' DASH - 18' SKIP WHITE)
(A) EXISTING PAVEMENT MARKING

FILE NAME = P:\10-IL\14111-IDOT - Sacramento and Paulina over I-290\Work\CADD\Sacramento - Contract 62K65\CADD_Sheets\D162K65-sht-staging-06-stg1&2_Sacramento.dgn

COLLINS ENGINEERS INC.

USER NAME = omartinez	DESIGNED - OM	REVISED -
	DRAWN - OM	REVISED -
PLOT SCALE = 100.0000 ' / in.	CHECKED - RG	REVISED -
PLOT DATE = 11/5/2025	DATE - 09/12/2025	REVISED -

STATE OF ILLINOIS
DEPARTMENT OF TRANSPORTATION

FAI–290 (EISENHOWER EXPRESSWAY) AT SACRAMENTO BOULEVARD
SACRAMENTO BOULEVARD MAINTENANCE OF TRAFFIC PLAN

SCALE: 1' = 50" | SHEET NO. 8 OF 8 SHEETS | STA. | TO STA.

F.A.I. RTE.	SECTION	COUNTY	TOTAL SHEETS	SHEET NO.
290	2019-192-B-R	COOK	237	66
		CONTRACT NO. 62K65		
FED. ROAD DIST. NO.	ILLINOIS	FED. AID PROJECT		

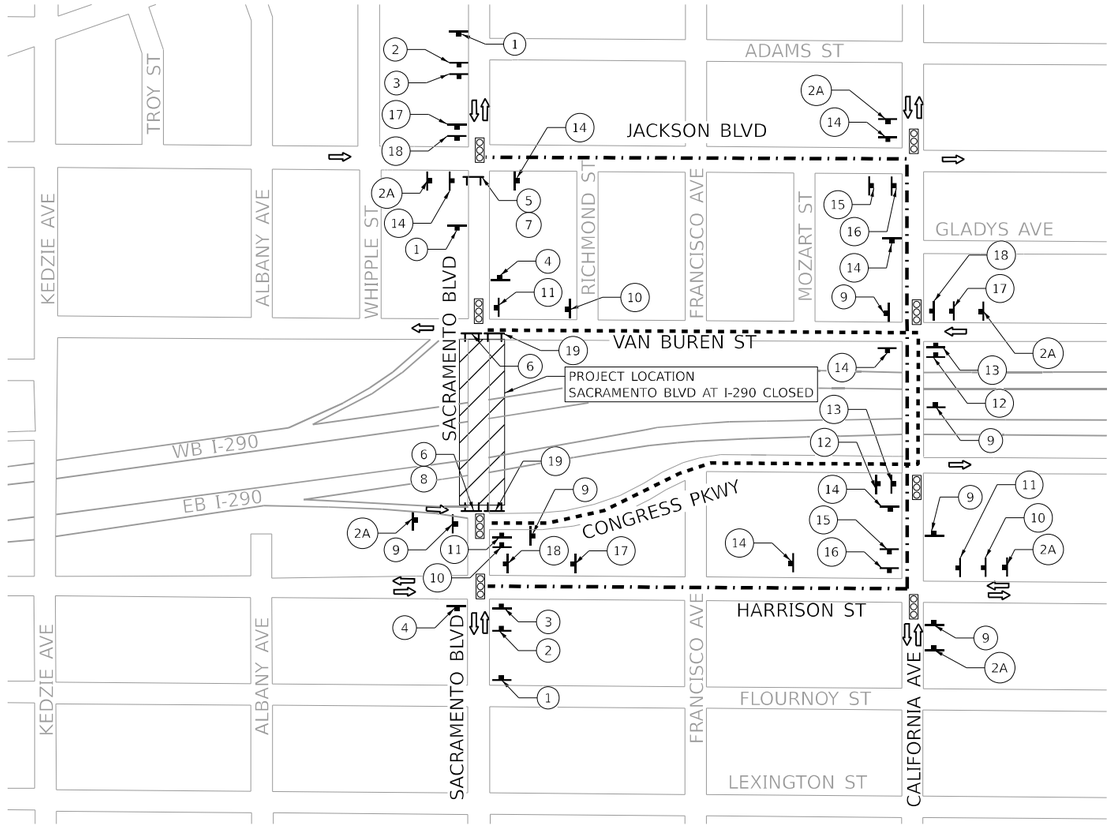

N

NOT TO SCALE

LEGEND

- DIRECTION OF TRAVEL
- EXISTING TRAFFIC SIGNAL
- SIGN ON PORTABLE OR PERMANENT SUPPORT
- PROPOSED NORTHBOUND VEHICLE DETOUR ROUTE
  DETOURED VIA:
  -0.25 MI EAST ON CONGRESS PKWY (LOCAL STREET = 11,600 ADT)
  -0.10 MI NORTH ON CALIFORNIA AVE (MAJOR COLLECTOR = 11,300 ADT
  -0.25 MI WEST ON VAN BUREN ST (LOCAL STREET = 10,500 ADT)
  TOTAL DETOUR LENGTH = 0.60 MI
- PROPOSED SOUTHBOUND VEHICLE DETOUR ROUTE
  DETOURED VIA:
  -0.25 MI EAST ON JACKSON BLVD (MAJOR COLLECTOR = 7,900 ADT)
  -0.25 MI SOUTH ON CALIFORNIA ST (MAJOR COLLECTOR = 11,300 ADT)
  -0.25 MI WEST ON HARRISON ST (MAJOR COLLECTOR = 3,500 ADT)
  TOTAL = 0.75 MI
- CLOSED PORTION OF SACRAMENTO BLVD

1 ROAD CLOSED AHEAD — W20-3-48(O) (W AMBER BEACON)

2 DETOUR AHEAD — W20-2-48(O) (W AMBER BEACON)

2A DETOUR AHEAD / SACRAMENTO BOULEVARD — W20-2-48(O) (W AMBER BEACON); SPECIAL-24x18(O)

3 ROAD CLOSED 500 FT — W20-3-48(O)

4 END DETOUR — M4-8A-24x18(O)

5 ROAD CLOSED TO THRU TRAFFIC — R11-4-60x30 *

6 BRIDGE OUT — R11-2-48x30 *

7 DETOUR — M4-10L-48x18(O) *

8 DETOUR — M4-10R-48x18(O) *

9 NORTH / SACRAMENTO BOULEVARD / DETOUR — M3-1-24x12(O); SPECIAL-24x18(O); M4-9-30x24(O)

10 NORTH / SACRAMENTO BOULEVARD / DETOUR — M3-1-24x12(O); SPECIAL-24x18(O); M4-9-30x24(O)

11 NORTH / SACRAMENTO BOULEVARD / DETOUR — M3-1-24x12(O); SPECIAL-24x18(O); M4-9-30x24(O)

12 NORTH / SACRAMENTO BOULEVARD / DETOUR — M3-1-24x12(O); SPECIAL-24x18(O); M4-9-30x24(O)

13 NORTH / SACRAMENTO BOULEVARD / DETOUR — M3-1-24x12(O); SPECIAL-24x18(O); M4-9-30x24(O)

14 SOUTH / SACRAMENTO BOULEVARD / DETOUR — M3-3-24x12(O); SPECIAL-24x18(O); M4-9-30x24(O)

15 SOUTH / SACRAMENTO BOULEVARD / DETOUR — M3-3-24x12(O); SPECIAL-24x18(O); M4-9-30x24(O)

16 SOUTH / SACRAMENTO BOULEVARD / DETOUR — M3-3-24x12(O); SPECIAL-24x18(O); M4-9-30x24(O)

17 SOUTH / SACRAMENTO BOULEVARD / DETOUR — M3-3-24x12(O); SPECIAL-24x18(O); M4-9-30x24(O)

18 SOUTH / SACRAMENTO BOULEVARD / DETOUR — M3-3-24x12(O); SPECIAL-24x18(O); M4-9-30x24(O)

19 ROAD CLOSED — R11-2-48x30 *

* MOUNT SIGN ON TYPE III BARRICADE WITH FLASHING LIGHTS.

NOTES

1. SIGNS DESIGNATED AS (O) SHALL HAVE FLUORESCENT ORANGE SHEETING MATERIAL.
2. TEMPORARY TRAFFIC SIGNAL TIMING REQUIRED FOR THE INTERSECTIONS AT:
   - JACKSON BLVD AND SACRAMENTO BLVD
   - JACKSON BLVD AND CALIFORNIA AVE
   - VAN BUREN AVE AND SACRAMENTO BLVD
   - VAN BUREN AVE AND CALIFORNIA AVE
   - CONGRESS PKWY AND SACRAMENTO BLVD
   - CONGRESS PKWY AND CALIFORNIA AVE
   - HARRISON ST AND SACRAMENTO BLVD
   - HARRISON ST AND CALIFORNIA AVE
3. SEE PEDESTRIAN DETOUR SHEET FOR PEDESTRIAN DETOUR SIGNING.
4. THE CONTRACTOR SHALL NOT OBSTRUCT ANY NON-CONFLICTING EXISTING SIGN WITH PLACEMENT OF THE DETOUR SIGNAGE.
5. SEE TC-21 FOR TYPICAL SIGN SPACING.

FILE NAME = P:\10-IL\14111-BDOT - Sacramento and Paulina over I-290\Work\CADD\Sacramento - Contract 62K65\CADD_Sheets\D162K65-sht-staging-07-Vehicle_Detour.dgn

COLLINS ENGINEERS INC

USER NAME = omartinez	DESIGNED - OM	REVISED -	
	DRAWN - OM	REVISED -	
PLOT SCALE = 100.0000 ' / in.	CHECKED - RG	REVISED -	
PLOT DATE = 11/5/2025	DATE - 09/12/2025	REVISED -	

STATE OF ILLINOIS
DEPARTMENT OF TRANSPORTATION

FAI–290 (EISENHOWER EXPRESSWAY) AT SACRAMENTO BOULEVARD
DETOUR MAP

SCALE: NTS | SHEET NO. 1 OF 1 SHEETS | STA. | TO STA.

F.A.I. RTE.	SECTION	COUNTY	TOTAL SHEETS	SHEET NO.
290	2019-192-B-R	COOK	237	67
		CONTRACT NO. 62K65		
FED. ROAD DIST. NO.	ILLINOIS	FED. AID PROJECT		

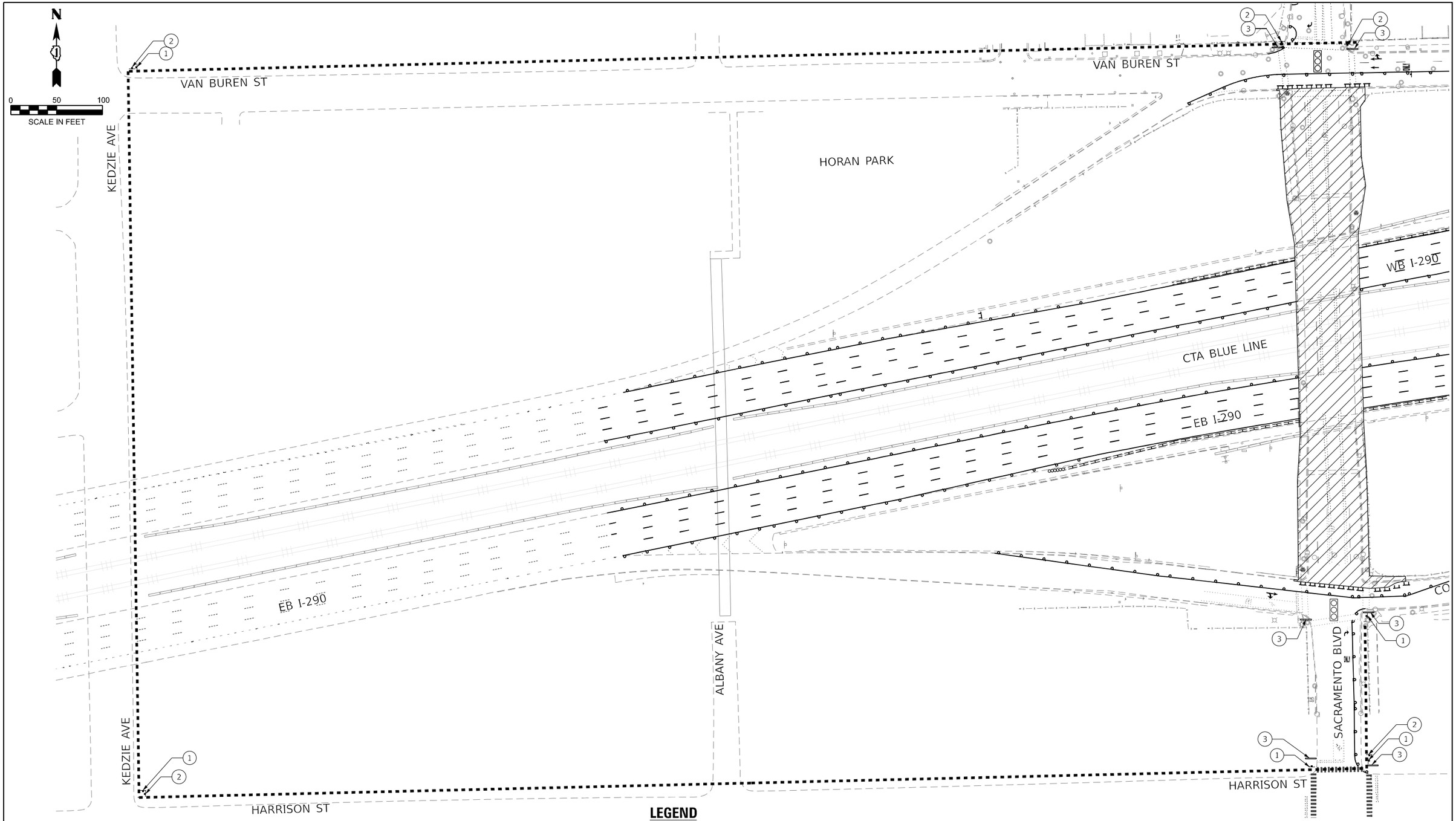

LEGEND

- EXISTING TRAFFIC SIGNAL
- TYPE III BARRICADE
- DETECTABLE PEDESTRIAN CHANNELIZING BARRICADE
- PROPOSED DETOUR ROUTE DETOURED VIA SACRAMENTO BLVD - HARRISON ST - KEDZIE AVE - VAN BUREN ST 0.70 MILES
- SIGN ON PORTABLE OR PERMANENT SUPPORT
- CLOSED PORTION OF SACRAMENTO BLVD

1. DETOUR — M4-9b-3024
2. DETOUR — M4-9b-3024
3. SIDEWALK CLOSED — R9-9-2412

NOTES

1. SEE DETOUR SHEET FOR VEHICLE DETOUR SIGNING.

FILE NAME = P:\10-IL\14111-IDOT - Sacramento and Paulina over I-290\Work\CADD\Sacramento - Contract 62K65\CADD_Sheets\D162K65-sht-Staging-08-Pedestrian_Detour.dgn

COLLINS ENGINEERS INC.

USER NAME = omartinez	DESIGNED - OM	REVISED -
	DRAWN - OM	REVISED -
PLOT SCALE = 100.0000 ' / in.	CHECKED - RG	REVISED -
PLOT DATE = 10/15/2025	DATE - 09/12/2025	REVISED -

STATE OF ILLINOIS
DEPARTMENT OF TRANSPORTATION

FAI–290 (EISENHOWER EXPRESSWAY) AT SACRAMENTO BOULEVARD
PEDESTRIAN DETOUR MAP

SCALE: 1" = 50" | SHEET NO. 1 OF 1 SHEETS | STA. | TO STA.

F.A.I. RTE.	SECTION	COUNTY	TOTAL SHEETS	SHEET NO.
290	2019-192-B-R	COOK	237	68
		CONTRACT NO. 62K65		
FED. ROAD DIST. NO.	ILLINOIS	FED. AID PROJECT		

SIGN DETAIL

1:30

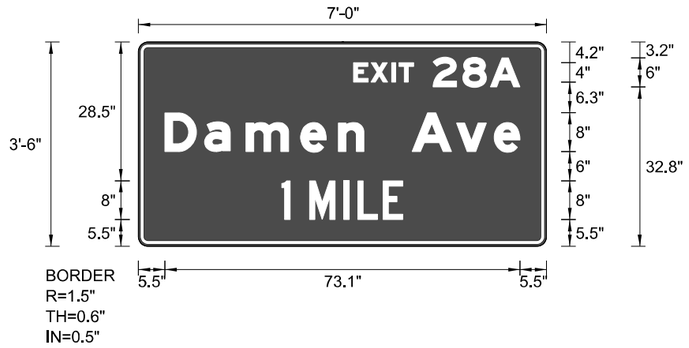

SIGN NUMBER	Temp-1
WIDTH x HGHT.	84" x 42"
BORDER WIDTH	0.6"
CORNER RADIUS	1.5"
MOUNTING	Ground
BACKGROUND	TYPE: Reflective
	COLOR: Orange
LEGEND/BORDER	TYPE: Reflective
	COLOR: Black/Black

SYMBOL	ROT	X	Y	WID	HT

Panel Style: Construction Guide
Dimensions are in inches,tenths

Letter locations are panel edge to lower left corner

LETTER POSITIONS (X)

																																		LENGTH	SERIES/SIZE
E	X	I	T	2	8	A																													EM 2000
44.3"	47.8"	52.2"	53.7"	60.6"	66.8"	72.5"																												34.2"	4",6"
D	a	m	e	n		A	v	e																											EM 2000
5.5"	13.6"	22.1"	33.4"	41.2"	48"	56.4"	65.5"	73.2"																										73"	8"/6"
1	M	I	L	E																															EM 2000
29.6"	35.2"	42.3"	45.2"	50.4"																														24.9"	8"

FILE NAME = P:\10-IL\14111-ADD1 - Sacramento and Paulina over I-290\Work\CADD\Sacramento - Contract 62K65\CADD_Sheets\D162K65-sht-staging-09_sign_details.dgn

COLLINS ENGINEERS INC.

USER NAME = amartinez	DESIGNED - OM	REVISED -	
	DRAWN - OM	REVISED -	
PLOT SCALE = 40.0000 ' / in.	CHECKED - RG	REVISED -	
PLOT DATE = 10/13/2025	DATE - 09/12/2025	REVISED -	

STATE OF ILLINOIS
DEPARTMENT OF TRANSPORTATION

FAI–290 (EISENHOWER EXPRESSWAY) AT SACRAMENTO BOULEVARD
MAINTENANCE OF TRAFFIC – TEMPORARY SIGN DETAILS

SCALE: NTS | SHEET NO. 1 OF 2 SHEETS | STA. | TO STA.

F.A.I. RTE.	SECTION	COUNTY	TOTAL SHEETS	SHEET NO.
290	2019-192-B-R	COOK	237	69
		CONTRACT NO. 62K65		
FED. ROAD DIST. NO.	ILLINOIS	FED. AID PROJECT		

SIGN DETAIL

1:30

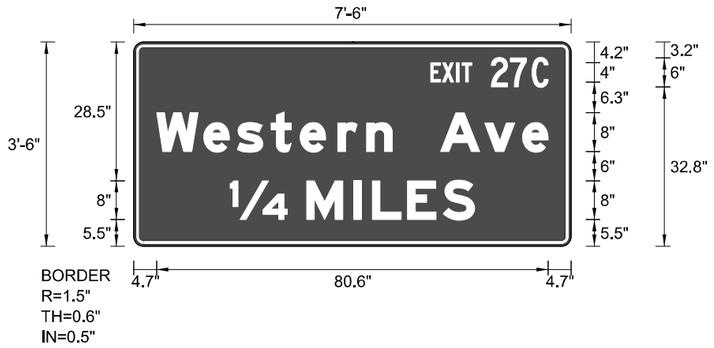

SIGN NUMBER	Temp-2
WIDTH x HGHT.	90" x 42"
BORDER WIDTH	0.6"
CORNER RADIUS	1.5"
MOUNTING	Ground
BACKGROUND	TYPE: Reflective
	COLOR: Orange
LEGEND/BORDER	TYPE: Reflective
	COLOR: Black/Black

SYMBOL	ROT	X	Y	WID	HT

Panel Style: Construction Guide
Dimensions are in inches,tenths

Letter locations are panel edge to lower left corner

LETTER POSITIONS (X)

																																	LENGTH	SERIES/SIZE
E	X	I	T	2	7	C																												EM 2000
61.1"	63.5"	66.4"	67.5"	73.6"	77.5"	82"																											24.2"	4",6"
W	e	s	t	e	r	n		A	v	e																								EM 2000
4.7"	14.4"	21.3"	28.2"	34.2"	42"	48"	54.8"	63.1"	72.2"	80"																							80.6"	8"/6"
1/4	M	I	L	E	S																													EM 2000
19.9"	35.6"	45.3"	49.1"	56.3"	63.7"																												50.3"	8"

FILE NAME = P:\10-IL\14111-D01 - Sacramento and Paulina over I-290\Work\CADD\Sacramento - Contract 62K65\CADD_Sheets\D162K65-sht-staging-09_sign_details.dgn

COLLINS ENGINEERS INC.

USER NAME = omartinez	DESIGNED - OM	REVISED -	
	DRAWN - OM	REVISED -	
PLOT SCALE = 40.0000 ' / in.	CHECKED - RG	REVISED -	
PLOT DATE = 10/13/2025	DATE - 09/12/2025	REVISED -	

STATE OF ILLINOIS
DEPARTMENT OF TRANSPORTATION

FAI–290 (EISENHOWER EXPRESSWAY) AT SACRAMENTO BOULEVARD
MAINTENANCE OF TRAFFIC – TEMPORARY SIGN DETAILS

SCALE: NTS | SHEET NO. 2 OF 2 SHEETS | STA. | TO STA.

F.A.I. RTE.	SECTION	COUNTY	TOTAL SHEETS	SHEET NO.
290	2019-192-B-R	COOK	237	70
		CONTRACT NO. 62K65		
FED. ROAD DIST. NO.	ILLINOIS	FED. AID PROJECT		

DRAINAGE AND UTILITY GENERAL NOTES

1. FRAMES AND GRATES ADJUSTMENT OF PRIVATE UTILITIES WITHIN THE LIMITS OF THE IMPROVEMENTS SHALL BE DONE BY THEIR RESPECTIVE OWNERS AND ARE NOT PART OF THIS CONTRACT.
2. STORM SEWER CONSTRUCTED UNDER THE ROADWAY SHALL BE BACKFILLED ACCORDING TO METHOD 1 OF ARTICLE 550.07 OF THE STANDARD SPECIFICATIONS.
3. THE CONTRACTOR SHALL BE REQUIRED TO KEEP A RECORD OF THE LOCATIONS OF PLATED STRUCTURES BY STATION AND OFFSET LEFT OR RIGHT OF THE CENTERLINE OF PAVEMENT.
4. THE CONTRACTOR SHALL BE REQUIRED TO KEEP A RECORD OF THE LOCATIONS OF THE BURIED STRUCTURES ACCORDING TO THE STATION AND DISTANCE LEFT OR RIGHT OF THE CENTERLINE OF PAVEMENT. UPON COMPLETION OF THE WORK, THE CONTRACTOR SHALL DELIVER THE RECORD TO THE ENGINEER.
5. THE CONNECTION OF PROPOSED STORM SEWER TO EXISTING STORM SEWER OR DRAINAGE STRUCTURES SHALL BE INCLUDED IN THE COST OF THE PROPOSED STORM SEWER BEING CONNECTED.
6. THE TYPE, SIZE, LOCATION, AND INVERT ELEVATIONS FOR EXISTING PIPES HAVE BEEN TAKEN FROM SURVEY AND AS-BUILT DRAWINGS AS AVAILABLE. THE CONTRACTOR SHALL VERIFY ALL INFORMATION FOR EXISTING PIPES IN THE FIELD PRIOR TO ORDERING MATERIALS. BEFORE ORDERING STORM SEWERS, CATCH BASINS, PIPE CULVERTS, PIPE DRAINS, MANHOLES, INLETS, AND SCUPPERS, THE CONTRACTOR SHALL REVIEW THE EXISTING FIELD CONDITIONS AND THE DRAINAGE SCHEDULES FOUND IN THE PLANS FOR THE EXACT LENGTH AND QUANTITY NEEDED.
7. THE CONTRACTOR SHALL MAINTAIN THE SURFACE DRAINAGE OF ALL ROADWAYS DURING CONSTRUCTION OF THIS PROJECT. WHEN EXISTING DRAINAGE FACILITIES ARE DISTURBED, THE CONTRACTOR SHALL PROVIDE AND MAINTAIN TEMPORARY OUTLETS AND CONNECTIONS FOR ALL PRIVATE OR PUBLIC DRAINS, SEWERS, INLETS, AND CATCH BASINS. THE CONTRACTOR SHALL PROVIDE FACILITIES TO TAKE IN ALL STORM WATER, WHICH WILL BE RECEIVED BY THESE DRAINS AND SEWERS AND DISCHARGE SAME. THE CONTRACTOR SHALL PROVIDE AND MAINTAIN TEMPORARY OUTLET AND BE PREPARED AT ALL TIMES TO DISPOSE OF THE WATER RECEIVED FROM ALL THESE TEMPORARY CONNECTIONS UNTIL INSTALLATION IS COMPLETE. INCLUDING PAVEMENT, THIS WORK SHALL NOT BE PAID FOR DIRECTLY BUT SHALL BE CONSIDERED INCLUDED IN THE CONTRACT. COORDINATION WITH ALL AGENCIES INVOLVED IS REQUIRED.
8. THE LOCATION AND ELEVATION OF EXISTING UTILITIES ARE APPROXIMATE AND ARE PROVIDED BY THE OWNERS. THE EXACT LOCATIONS AND ELEVATIONS ARE TO BE VERIFIED BY THE CONTRACTOR THROUGH THE OWNERS OF THE UTILITIES.
9. EMBANKMENTS SHALL BE COMPLETED TO THE SATISFACTION OF THE ENGINEER PRIOR TO EXCAVATION FOR STORM SEWER.
10. MANHOLES AND CATCH BASINS SHALL BE CONSTRUCTED WITH FLAT TOPS WHERE THE DIFFERENCE BETWEEN THE RIM ELEVATION AND INVERT ELEVATION IS LESS THAN SIX (6) FEET.
11. ALL ADJUSTMENTS OR RECONSTRUCTIONS SHALL INCLUDE THE REMOVAL AND REPLACEMENT, AT THE CONTRACTOR'S EXPENSE, OF ALL UNSUITABLE TWO (2) FOOT INSIDE DIAMETER ADJUSTING RINGS.
12. ALL FIELD TILES ENCOUNTERED SHALL BE CAREFULLY PRESERVED AND CONNECTED TO PROPOSED DRAINAGE STRUCTURES, SEWERS, OR DITCHES, AS DIRECTED BY THE ENGINEER. THIS WORK WILL BE PAID FOR AT THE APPLICABLE CONTRACT UNIT PRICE OR IN ACCORDANCE WITH ARTICLE 109.04 OF THE STANDARD SPECIFICATIONS.
13. THE CONTRACTOR SHALL BE RESPONSIBLE FOR THE PROTECTION OF ALL UNDERGROUND OR SURFACE UTILITIES EVEN THOUGH THEY MAY NOT BE SHOWN ON THE PLANS. ANY UTILITY THAT IS DAMAGED DURING CONSTRUCTION SHALL BE REPAIRED OR REPLACED TO THE SATISFACTION OF THE ENGINEER. THIS WORK SHALL BE AT THE CONTRACTOR'S EXPENSE.
14. THE STATION/ OFFSET/ ELEVATIONS NOTED FOR ALL DRAINAGE STRUCTURES LOCATED IN THE CURB LINE REFER TO THE POSITION OF THE ADJACENT PROPOSED EDGE OF PAVEMENT. THE CONTRACTOR SHALL BE RESPONSIBLE FOR DETERMINING THE OFFSET NECESSARY FOR THE STRUCTURES TO SET THE FRAME AND GRATES IN THE PROPER LOCATION. ALL OTHER STRUCTURES ARE DIMENSIONED TO THE CENTER OF THE STRUCTURE. ELEVATION INDICATES RIM GRADES.
15. PIPE UNDERDRAINS SHALL BE INSTALLED ACCORDING TO SECTION 601 OF THE STANDARD SPECIFICATIONS AND STANDARD 606001-05. TOP OF PIPE UNDERDRAINS SHALL BE MINIMUM OF 6" BELOW THE AGGREGATE SUBGRADE LAYER. THE COST OF MAKING UNDERDRAINS CONNECTIONS TO DRAINAGE STRUCTURES SHALL BE INCLUDED IN THE COSTS OF THE PIPE UNDERDRAINS.
16. EXTREME CAUTION IS TO BE USED WHEN WORKING NEXT TO CROWN CASTLE CASTLE FACILITIES. HAND TRENCH WITHIN 3' OF CROWN CASTLE FACILITIES TO VISUALLY LOCATE AND A MINIMUM OF 12" CLEARANCE (VERTICAL & HORIZONTAL FROM EXISTING CROWN CASTLE FACILITIES IS REQUIRED. CONTACT DIGGER FOR LOCATES A MINIMUM OF 48 HOURS BEFORE BEGINNING CONSTRUCTION.
17. EXCAVATIONS PROHIBITED WITHIN 50 FEET OF HIGH PRESSURE GAS MANS UNLESS A REPRESENTATIVE OF THE PIPELINE IS NOTIFIED.
18. PEOPLES GAS HIGH PRESSURE GAS MAIN IS PRESENT WITHIN AREA OF CONSTRUCTION. USE EXTREME CAUTION NEAR ALL GAS FACILITIES. HAND EXCAVATION IS REQUIRED TO LOCATE AND EXPOSE GAS MAINS PRIOR TO CROSSING AND WORKING WITHIN 5 FEET OF ALL GAS FACILITIES .A MINIMUM OF 5' HORIZONTAL EDGE TO EDGE CLEARANCE AND 24" VERTICAL EDGE TO EDGE CLEARANCE IS REQUIRED FOR HIGH PRESSURE GAS MAINS. CONTRACTOR SHALL NOTIFY Central-Shop-OUC@peoplesgasdelivery.com, A MINIMUM OF 5 BUSINESS DAYS PRIOR TO EXCAVATION TO SET UP ON SITE INSPECTION. PEOPLES GAS TO BE ON SITE TO MONITOR CONSTRUCTION ACTIVITIES WHEN WITHIN 5 FEET AND WHENEVER CROSSING HIGH PRESSURE GAS FACILITIES. PIPELINE MARKERS SHALL BE MAINTAINED.
19. THIS PROJECT WILL BE PLACED ON PEOPLES GAS WATCH & PROTECT. NOTIFY SYSTEM INTEGRITY OPERATIONS SUPERVISOR AT CENTAL-SHOP-OUC@PEOPLESGASDELIVERY.COM A MINIMUM OF 5 BUSINESS DAYS PRIOR TO EXCAVATION TO SET UP ON-SITE INSPECTION.
20. FOR PEOPLES GAS VERTICAL ADJUSTMENTS CONTACT PAVING AND RESTORATION AT PGLRESTORATION@PEOPLESGASDELIVERY.COM, FOUR (4) WEEKS PRIOR TO THE START OF RESTORATION FOR PLANNING AND SCHEDULING
21. USE CAUTION NEAR ALL AT&T FACILITIES IN WORK AREA. HAND EXCAVATION IS REQUIRED TO LOCATE, PROTECT, AND SUPPORT FACILITIES AS REQUIRED. A MINIMUM OF 12 INCHES VERTICAL CLEARANCE AND 3 FEET OF HORIZONTAL CLEARANCE IS REQUIRED FOR AT&T FACILITIES.

DRAINAGE AND UTILITY LEGENDS

EXISTING UTILITIES

- EXISTING MANHOLE
- EXISTING WATER VALVE VAULT
- EXISTING GAS VALVE VAULT
- W-ADJ — CITY WATER STRUCTURE TO BE ADJUSTED
- E-ADJ — CITY ELECTRIC STRUCTURE TO BE ADJUSTED
- CPD-ADJ — CHICAGO PARK DISTRICT STRUCTURE TO BE ADJUSTED
- A — EXISTING AERIAL LINE
- E — EXISTING ELECTRIC
- W — EXISTING WATER
- G — EXISTING GAS

PROPOSED UTILITIES

- PROPOSED MANHOLE
- PROPOSED HAND HOLE
- PROPOSED SIGNAL POST
- PROPOSED STEEL MAST ARM
- PROPOSED LIGHT POLE
- E — PROPOSED ELECTRIC

EXISTING /REMOVAL DRAINAGE

- EXISTING MANHOLE
- EXISTING CATCH BASIN
- EXISTING INLET
- ES-## — EXISTING DRAINAGE STRUCTURE LABEL
- EP-## — EXISTING PIPE LABEL
- ADJ — DRAINAGE STRUCTURE TO BE ADJUSTED
- R — DRAINAGE STRUCTURE TO BE REMOVED
- C — DRAINAGE STRUCTURE TO BE CLEANED
- EXISTING STORM SEWER
- STORM SEWER TO BE REMOVED
- EXISTING COMBINED SEWER

PROPOSED DRAINAGE

- PROPOSED MANHOLE
- PROPOSED CATCH BASIN
- S-## — PROPOSED DRAINAGE STRUCTURE LABEL
- P-## — PROPOSED PIPE LABEL
- U-## — PROPOSED UNDERDRAIN LABEL
- PROPOSED STORM SEWER
- PROPOSED UNDERDRAIN

CITY OF CHICAGO NOTES

1. ALL CATCH BASINS IN THE CITY OF CHICAGO SHALL MEET THE DEPARTMENT OF SEWERS' STANDARDS.
2. THE LICENSED SEWER CONTRACTOR MUST SUBMIT TWO (2) SETS OF PLANS APPROVED BY THE DEPARTMENT OF SEWERS FOR THE ISSUE OF THE SEWER PERMIT IN SUITE 410 - 333 SOUTH STATE STREET, CHICAGO, IL 60604. INSPECTION WILL BE PROVIDED BY THE DEPARTMENT OF SEWERS.
3. IF THE SEWER PIPE COVER IS REDUCED TO LESS THAN THREE (3) FEET, CONCRETE ENCASEMENT OF THE SEWER OR REPLACEMENT OF THESE SEWERS WITH CLASS 52 DUCTILE IRON PIPE WILL BE REQUIRED.
4. PERFORATED LIDS SHALL BE PLACED ON ALL MANHOLES AND CATCH BASINS.
5. ALL BROKEN, CRACKED, WORN OR OTHERWISE DAMAGED OR BICYCLE UNSAFE FRAMES AND LIDS ON SEWER STRUCTURES, SHALL BE REPLACED WITH NEW DEPARTMENT OF SEWERS' STANDARD FRAMES AND LIDS.
6. CITY OF CHICAGO CASTINGS ARE THE PROPERTY OF THE CITY OF CHICAGO AND THE CONTRACTOR SHALL NOTIFY THE CITY FOR REMOVAL AND DISPOSITION OF THE CASTINGS.

EXISTING DRAINAGE STRUCTURES SCHEDULE

STRUCTURE NAME	STATION	OFFSET (FT)	LT/RT	OFFSET LOCATION (EDGE OF PAVEMENT OR CENTER OF STRUCTURE)	ALIGNMENT	RIM ELEV	INVERT ELEVATIONS				REMOVING INLETS	REMOVING CATCH BASINS	CATCH BASINS TO BE ADJUSTED	MANHOLES TO BE ADJUSTED	FRAMES AND LIDS TO BE ADJUSTED (SPECIAL)	MANHOLES TO BE ADJUSTED (SPECIAL)	DRAINAGE STRUCTURES TO BE CLEANED	DRAINAGE RESTRICTOR	LID TYPE (STANDARD VS ADA COMPLIANT) SEE NOTE 1	NOTES
							N	E	S	W	EACH	EACH	EACH	EACH	EACH	EACH	EACH	EACH		
ES-01	254+15.97	15.78	RT	EOP	CONGRESS PKWY	594.76	592.66				1									
ES-02	254+17.41	11.95	LT	EOP	CONGRESS PKWY	594.61			591.96		1									
ES-03	254+13.39	1.72	RT	COS	CONGRESS PKWY	594.93	590.98	591.23		590.73					1		1			
ES-04	5+70.46	28.94	RT	EOP	SACRAMENTO BLVD	595.19				592.94	1									
ES-05	5+75.11	29.00	RT	EOP	SACRAMENTO BLVD	595.23				592.93	1									
ES-06	5+72.72	23.24	RT	COS	SACRAMENTO BLVD	595.35	591.15		591.15	591.15		1								
ES-07	5+75.16	29.23	LT	EOP	SACRAMENTO BLVD	594.73		592.93			1									
ES-08	5+78.74	29.24	LT	EOP	SACRAMENTO BLVD	594.79		592.39			1									
ES-09	5+73.15	22.35	LT	COS	SACRAMENTO BLVD	595.10	591.00	591.00		591.00		1								
ES-10	5+74.84	0.39	LT	COS	SACRAMENTO BLVD	595.42		589.62	UNK	589.62				1			1			
ES-11	5+24.79	0.32	LT	COS	SACRAMENTO BLVD	595.66	588.86	UNK	588.56							1	1		STANDARD	
ES-12	4+40.61	0.02	LT	COS	SACRAMENTO BLVD	595.69	UNK		UNK						1		1			
ES-12a	3+45.75	0.50	LT	COS	SACRAMENTO BLVD	UNK	UNK		UNK											
ES-13	10+40.90	32.94	LT	EOP	SACRAMENTO BLVD	594.70		591.90			1									
ES-14	10+45.00	32.98	LT	EOP	SACRAMENTO BLVD	594.72		592.32			1									
ES-15	10+42.76	22.68	LT	COS	SACRAMENTO BLVD	594.96	590.46	590.46		590.46		1								
ES-16	10+41.26	29.97	RT	EOP	SACRAMENTO BLVD	594.69				592.29	1									
ES-17	10+44.04	29.96	RT	EOP	SACRAMENTO BLVD	594.64				592.24	1									
ES-18	10+42.68	23.14	RT	COS	SACRAMENTO BLVD	594.94	590.84	590.84		590.84		1								
ES-19	10+33.54	0.71	RT	COS	SACRAMENTO BLVD	595.21	590.31	590.31		590.31				1			1		STANDARD	
ES-20	11+03.42	6.85	RT	COS	SACRAMENTO BLVD	595.23	588.83	588.83	589.23	588.83					1		1			
ES-21	112+54.53	17.92	RT	EOP	W VAN BUREN ST	594.61	590.81										1			
ES-22	112+65.53	20.44	LT	EOP	W VAN BUREN ST	594.21			590.21				1				1	1		ORIFICE RESTRICTOR
ES-23	112+51.31	1.80	LT	COS	W VAN BUREN ST	595.10		588.70	588.70	588.70							1			
ES-24	112+99.22	8.80	LT	COS	W VAN BUREN ST	595.16			UNK						1		1			
ES-25	114+20.66	16.91	RT	EOP	W VAN BUREN ST	594.36	593.86										1			
ES-26	114+20.45	1.56	LT	COS	W VAN BUREN ST	594.97		588.17	588.27	588.17							1			
ES-27	113+93.39	19.75	LT	EOP	W VAN BUREN ST	594.31			589.81								1			
ES-28	11+17.69	8.51	RT	COS	SACRAMENTO BLVD	595.14	UNK	UNK	UNK	UNK						1	1		STANDARD	
ES-29	11+63.79	33.45	LT	COS	SACRAMENTO BLVD	594.08		591.88									1			
ES-30	11+62.76	22.82	LT	COS	SACRAMENTO BLVD	594.73		UNK		UNK							1			
ES-31	11+63.14	23.87	RT	COS	SACRAMENTO BLVD	594.22				589.52							1			
ES-32	12+36.02	0.31	RT	COS	SACRAMENTO BLVD	595.26	UNK		UNK								1			
ES-33a	1064+00.97	22.97	LT	EOP	I-290 WB	581.89			576.80				1				1			SEE NOTE 2
ES-33	1065+72.31	22.29	LT	EOP	I-290 WB	580.46			578.46				1				1			SEE NOTE 2
ES-34	1066+64.00	34.51	LT	COS	I-290 WB	580.41		577.00				1								SEE NOTE 2
ES-35	1067+21.89	22.09	LT	EOP	I-290 WB	579.64	575.50		575.50			1								SEE NOTE 2
ES-36	1063+61.73	24.97	RT	COS	I-290 EB	583.24	578.50						1				1			SEE NOTE 2
ES-37	1063+60.86	14.98	RT	EOP	I-290 EB	582.10	578.46		578.46				1				1			SEE NOTE 2
ES-37a	1061+84.75	12.77	RT	EOP	I-290 EB	583.83	579.39						1				1			SEE NOTE 2
ES-38	1065+05.67	17.23	RT	EOP	I-290 EB	580.67	578.32						1				1			SEE NOTE 2
ES-38a	1066+54.84	18.56	RT	EOP	I-290 EB	579.73	575.23										1			SEE NOTE 2
										TOTALS	10	6	7	2	4	2	25	1		

PROPOSED DRAINAGE STRUCTURES SCHEDULE

STRUCTURE NAME	STATION	OFFSET (FT)	LT/RT	OFFSET LOCATION (EDGE OF PAVEMENT OR CENTER OF STRUCTURE)	ALIGNMENT	RIM ELEV	INVERT ELEVATIONS				CATCH BASINS, TYPE A, 4'-DIAMETER, TYPE 1 FRAME, OPEN LID (CITY OF CHICAGO)	MANHOLES TYPE A, 3' DIA., TYPE 1 FRAME, OPEN LID (CITY OF CHICAGO)	CATCH BASINS, TYPE C, TYPE 24 FRAME AND GRATE	CATCH BASINS, TYPE A, 4' DIAMETER, TYPE 24 FRAME AND GRATE	RESTRICTOR TYPE (IF APPLICABLE)	LID TYPE (STANDARD VS ADA COMPLIANT) SEE NOTE 1	NOTES
							N	E	S	W	EACH	EACH	EACH	EACH	EACH		
S-1	254+15.75	15.75	RT	EOP	E CONGRESS PKWY	594.77	592.66*				1				ORIFICE	STANDARD	
S-2	254+15.84	5.80	LT	EOP	E CONGRESS PKWY	594.80			591.96*		1				ORIFICE	STANDARD	
S-3	5+71.00	23.00	RT	EOP	S SACRAMENTO BLVD	594.54				591.30	1				ORIFICE	ADA COMPLIANT	
S-4	5+80.00	23.00	RT	EOP	S SACRAMENTO BLVD	595.14				591.30	1				ORIFICE	ADA COMPLIANT	
S-5	5+73.11	19.00	RT	COS	S SACRAMENTO BLVD	595.16	591.20	591.15*	591.20			1				ADA COMPLIANT	
S-6	5+71.00	23.00	LT	EOP	S SACRAMENTO BLVD	595.07		591.20			1				ORIFICE	ADA COMPLIANT	
S-7	5+80.00	23.00	LT	EOP	S SACRAMENTO BLVD	595.14		591.20			1				ORIFICE	ADA COMPLIANT	
S-8	5+73.30	19.00	LT	COS	S SACRAMENTO BLVD	595.16	591.10	591.00*	591.10			1				ADA COMPLIANT	
S-9	10+38.00	25.08	LT	EOP	S SACRAMENTO BLVD	595.22		590.60			1				ORIFICE	ADA COMPLIANT	
S-10	10+46.69	25.43	LT	EOP	S SACRAMENTO BLVD	595.10		590.60			1				ORIFICE	ADA COMPLIANT	
S-10a	10+42.76	22.68	LT	COS	S SACRAMENTO BLVD	595.22						1				ADA COMPLIANT	
S-11	10+38.00	23.00	RT	EOP	S SACRAMENTO BLVD	595.26				591.10	1				ORIFICE	ADA COMPLIANT	
S-12	10+46.49	23.00	RT	EOP	S SACRAMENTO BLVD	595.14				591.10	1				ORIFICE	ADA COMPLIANT	
S-13	10+40.81	19.00	RT	COS	S SACRAMENTO BLVD	595.31	591.00		591.00	590.80*		1				ADA COMPLIANT	
S-14	1066+65.00	22.25	LT	EOP	I-290 WB	579.70		576.30					1				
S-15	1067+21.89	22.10	LT	EOP	I-290 WB	579.96			575.50*	575.70				1			REPLACE EXISTING
										TOTALS	10	4	1	1			

*INVERT AT THIS LOCATION IS AN APPROXIMATION, TRUE INVERT SHALL BE DETERMINED BASED ON THE EXISTING PIPE ELEVATION AT THAT POINT

NOTES:

1. SEE IDOT DISTRICT 1 STANDARD BD600-13 (BD-47) FOR STANDARD AND ADA COMPLIANT LIDS AND FRAMES.
2. I-290 INVERT INFORMATION TAKEN FROM RECORD DRAWINGS DATED NOVEMBER 1983.
3. UNK = UNKNOWN INVERT, PIPE MATERIAL, OR STRUCTURE TYPE.

MODEL: Default
FILE NAME: P:\104\1441-IDOT - Sacramento and Paulina over I-290\Work\CADD\Sacramento - Contract 62K65\CADD Sheets\D1 62K65-shi-drain-notes&schedules.dgn

COLLINS ENGINEERS INC.

USER NAME = orush	DESIGNED - OR	REVISED -	
	DRAWN - OR	REVISED -	
PLOT SCALE = 40.0000 ' / in.	CHECKED - RG	REVISED -	
PLOT DATE = 11/26/2025	DATE - 10/13/2025	REVISED -	

STATE OF ILLINOIS
DEPARTMENT OF TRANSPORTATION

FAI-290 (EISENHOWER EXPRESSWAY) AT SACRAMENTO BOULEVARD
EXISTING AND PROPOSED DRAINAGE STRUCTURE SCHEDULES

SCALE: | SHEET OF SHEETS | STA. | TO STA.

F.A.I. RTE.	SECTION	COUNTY	TOTAL SHEETS	SHEET NO.
290	2019-192-B-R	COOK	237	72
		CONTRACT NO. 62K65		
		ILLINOIS	FED. AID PROJECT	

EXISTING DRAINAGE PIPES SCHEDULE

PIPE NAME	US STRUCTURE	US INVERT	DS STRUCTURE	DS INVERT	EXISTING PIPE SIZE AND MATERIAL	EXISTING SEWER TYPE	LENGTH	SLOPE	TELEVISION INSPECTION OF STORM SEWER (SEE NOTE 2)	STORM SEWER REMOVAL 8"	STORM SEWER REMOVAL 10"	STORM SEWER REMOVAL 12"	STORM SEWERS TO BE CLEANED 8"	STORM SEWERS TO BE CLEANED 10"	STORM SEWERS TO BE CLEANED 12"	STORM SEWERS TO BE CLEANED 15"	COMBINED SEWERS TO BE CLEANED	TRENCH BACKFILL	NOTES
							FOOT	%	FOOT	FOOT	FOOT	FOOT	FOOT	FOOT	FOOT	FOOT	FOOT	CU YD	
EP-01	ES-01	592.66	ES-03	591.23	10" RCP	STORM SEWER	12.0	12%	12.0		1.8			12.0				0.5	
EP-02	ES-02	591.96	ES-03	590.98	10" RCP	STORM SEWER	11.8	8%	11.8		5.2			11.8				1.6	
EP-03	ES-03	590.73	ES-11	588.86	12" RCP	STORM SEWER	37.0	5%	37.0						37.0				
EP-04	ES-04	592.94	ES-06	591.15	8" CLAY SS	STORM SEWER	7.1	25%		7.1								2.1	
EP-05	ES-05	592.93	ES-06	591.15	8" CLAY SS	STORM SEWER	8.1	22%		8.1								2.4	
EP-06	ES-06	591.15	ES-10	589.62	10" CLAY SS	STORM SEWER	23.7	6%	23.7		4.2			23.7				1.3	
EP-07	ES-07	592.93	ES-09	591.00	8" CLAY SS	STORM SEWER	8.0	24%		8.0								2.4	
EP-08	ES-08	592.39	ES-09	591.00	8" CLAY SS	STORM SEWER	9.6	14%		9.6								2.9	
EP-09	ES-09	591.00	ES-10	589.62	10" CLAY SS	STORM SEWER	22.0	-	22.0		3.3			22.0				1.0	
EP-10	ES-10	UNK	ES-11	588.86	15" RCP	STORM SEWER	50.0	-	50.0							50.0			
EP-11	ES-11	588.56	ES-12	UNK	15" RCP	STORM SEWER	84.0	-	84.0							84.0			
EP-12	ES-12	UNK	ES-12a	UNK	15" RCP	STORM SEWER	94.8	-	94.8							94.8			
EP-13	ES-13	591.90	ES-15	590.46	8" CLAY SS	STORM SEWER	11.1	13%		11.1								3.3	
EP-14	ES-14	592.32	ES-15	590.46	8" CLAY SS	STORM SEWER	10.8	17%		10.8								3.2	
EP-15	ES-15	590.46	ES-19	590.31	10" CLAY SS	STORM SEWER	23.2	1%	23.2					23.2					
EP-16	ES-16	592.29	ES-18	590.84	8" CLAY SS	STORM SEWER	7.5	19%		7.5								2.2	
EP-17	ES-17	592.24	ES-18	590.84	8" CLAY SS	STORM SEWER	7.4	19%		7.4								2.2	
EP-18	ES-18	590.84	ES-19	590.31	10" CLAY SS	STORM SEWER	22.3	2%	22.3		4.5			22.3				1.4	
EP-19	ES-19	590.31	ES-20	589.23	15" RCP	STORM SEWER	67.2	2%	67.2							67.2			
EP-20	ES-20	588.83	ES-28	UNK	24" RCP	STORM SEWER	14.2	-	14.2								14.2		
EP-21	ES-21	590.81	ES-23	588.70	15" RCP	STORM SEWER	19.6	11%	19.6							19.6			
EP-22	ES-22	590.21	ES-23	588.70	10" RCP	STORM SEWER	23.9	6%	23.9					23.9					
EP-23	ES-23	588.70	ES-20	588.83	15" RCP	COMBINED SEWER	87.9	-	87.9								87.9		
EP-24	ES-24	UNK	-	UNK	UNK	COMBINED SEWER	5.0	-	5.0								5.0		
EP-25	ES-25	593.86	ES-26	588.17	8" CLAY SS	STORM SEWER	18.7	30%	18.7				18.7						
EP-26	ES-20	589.23	ES-26	588.17	15" RCP	COMBINED SEWER	73.9	1%	76.2								76.2		BLIND CONNECTION TO EP-26
EP-27	ES-27	589.81	-	588.39	8" CLAY SS	STORM SEWER	12.8	-	12.8				12.8						
EP-28	ES-28	UNK	ES-32	UNK	24" RCP	COMBINED SEWER	115.7	-	115.7								115.7		
EP-29	ES-29	591.88	ES-30	UNK	8" CLAY SS	STORM SEWER	10.7	-	10.7				10.7						
EP-30	ES-30	UNK	-	UNK	8" CLAY SS	STORM SEWER	28.2	-	28.2				28.2						BLIND CONNECTION TO EP-28
EP-31	ES-31	589.52	-	UNK	8" CLAY SS	STORM SEWER	18.5	-	18.5				18.5						BLIND CONNECTION TO EP-28
EP-32a	ES-33a	576.80	-	UNK	10" RCP	STORM SEWER	72.8		72.8					72.8					
EP-32	ES-33	578.46	-	UNK	12" PVC	STORM SEWER	64.3	-	64.3						64.3				
EP-33	ES-34	577.00	ES-35	575.50	12" PVC	STORM SEWER	60.0	3%				60.0						19.2	
EP-34	ES-35	575.50	-	UNK	12" PVC	STORM SEWER	64.9	-	64.9						64.9				
EP-35	ES-36	578.50	ES-37	578.46	12" PVC	STORM SEWER	8.8	0.5%	8.8						8.8				
EP-36	ES-37	578.46	-	UNK	12" PVC	STORM SEWER	63.2	-	63.2						63.2				
EP-37	ES-38	578.32	-	UNK	12" PVC	STORM SEWER	65.8	-	65.8						65.8				
								TOTALS	2438	70	20	60	89	212	304	316	299	46	

PROPOSED DRAINAGE PIPES SCHEDULE

PIPE NAME	US STRUCTURE	US INVERT	DS STRUCTURE	DS INVERT	SLOPE	COVER	STORM SEWERS, DUCTILE IRON, TYPE 1 8"	STORM SEWER, CLASS A, TYPE 1, 12"	TRENCH BACKFILL	NOTES
					%	FOOT	FOOT	FOOT	CU YD	
P-1	S-3	591.30	S-5	591.20	4.9%	1.74	2.1		0.6	DUCTILE IRON PIPE
P-2	S-4	591.30	S-5	591.20	1.8%	2.34	5.5		1.7	DUCTILE IRON PIPE
P-3	S-6	591.20	S-8	591.10	3.7%	2.37	2.7		0.8	DUCTILE IRON PIPE
P-4	S-7	591.20	S-8	591.00"	3.6%	2.44	5.6		1.7	DUCTILE IRON PIPE
P-5	S-9	590.60	ES-15	590.46	4.9%	3.00	2.9		0.9	DUCTILE IRON PIPE
P-6	S-10	590.60	ES-15	590.46	6.1%	3.00	2.3		0.7	DUCTILE IRON PIPE
P-7	S-11	591.10	S-13	591.00	4.1%	2.66	2.4		0.7	DUCTILE IRON PIPE
P-8	S-12	591.10	S-13	591.00	2.1%	2.54	4.9		1.5	DUCTILE IRON PIPE
P-9	S-14	576.30	S-15	575.70	1.1%	1.90		54.8	16.4	RCP
						TOTALS	29	55	25	

PROPOSED PIPE UNDERDRAIN SCHEDULE

UNDERDRAIN NAME	ALIGNMENT	PIPE UNDERDRAINS, TYPE 2, 4"	PIPE UNDERDRAINS FOR STRUCTURES (SPECIAL) 4"	NOTES
		FOOT	FOOT	
U-01	S SACRAMENTO BLVD	86.8		CONNECTS TO S-4
U-02	S SACRAMENTO BLVD	41.9		CONNECTS TO S-2
U-03	S SACRAMENTO BLVD	78.1		CONNECTS TO S-7
U-04	S SACRAMENTO BLVD	67.2		CONNECTS TO S-9
U-05	S SACRAMENTO BLVD	59.4		CONNECTS TO S-11
U-06	I-290 WB		205.0	CONNECTS TO S-15
U-07	I-290 EB		146.3	CONNECTS TO ES-38a
	TOTALS	334	352	

UTILITY ADJUSTMENT SCHEDULE

STRUCTURE LABEL	STATION	OFFSET	ALIGNMENT	FRAMES AND LIDS TO BE ADJUSTED	FRAMES AND LIDS TO BE ADJUSTED SPECIAL	NOTES
				EACH	EACH	
CPD-ADJ	4+96.86	31.48' RT	S SACRAMENTO BLVD	1		
E-ADJ	254+56.44	22.85' RT	E CONGRESS PKWY	1		
E-ADJ	112+79.48	15.76' LT	W VAN BUREN ST	1		
W-ADJ	112+84.01	26.31' LT	W VAN BUREN ST		1	
E-ADJ	113+85.50	16.63' LT	W VAN BUREN ST		1	
W-ADJ	11+48.12	13.00' LT	S SACRAMENTO BLVD		1	
			TOTALS	3	3	

NOTES:

1. I-290 STORM SEWER INFORMATION PER CITY OF CHICAGO SEWER ATLAS AND I-290 AS-BUILT PLANS.
2. SEWER TO BE TELEVISED BEFORE AND AFTER CONSTRUCTION.
3. UNK = UNKNOWN INVERT, PIPE MATERIAL, OR STRUCTURE TYPE.

MODEL: Default
FILE NAME: P:\1041\1441-IDOT - Sacramento and Paulina over I-290\Work\CADD\Sacramento - Contract 62K65\CADD Sheets\D162k65-sht-drain-notes&schedules.dgn

COLLINS ENGINEERS INC.

USER NAME = orush	DESIGNED - OR	REVISED -	
	DRAWN - OR	REVISED -	
PLOT SCALE = 40.0000 ' / in.	CHECKED - RG	REVISED -	
PLOT DATE = 10/14/2025	DATE - 10/13/2025	REVISED -	

STATE OF ILLINOIS
DEPARTMENT OF TRANSPORTATION

FAI–290 (EISENHOWER EXPRESSWAY) AT SACRAMENTO BOULEVARD
EXISTING AND PROPOSED DRAINAGE PIPE SCHEDULES

SCALE: | SHEET OF SHEETS | STA. | TO STA.

F.A.I. RTE.	SECTION	COUNTY	TOTAL SHEETS	SHEET NO.
290	2019-192-B-R	COOK	237	73
		CONTRACT NO. 62K65		
	ILLINOIS FED. AID PROJECT			

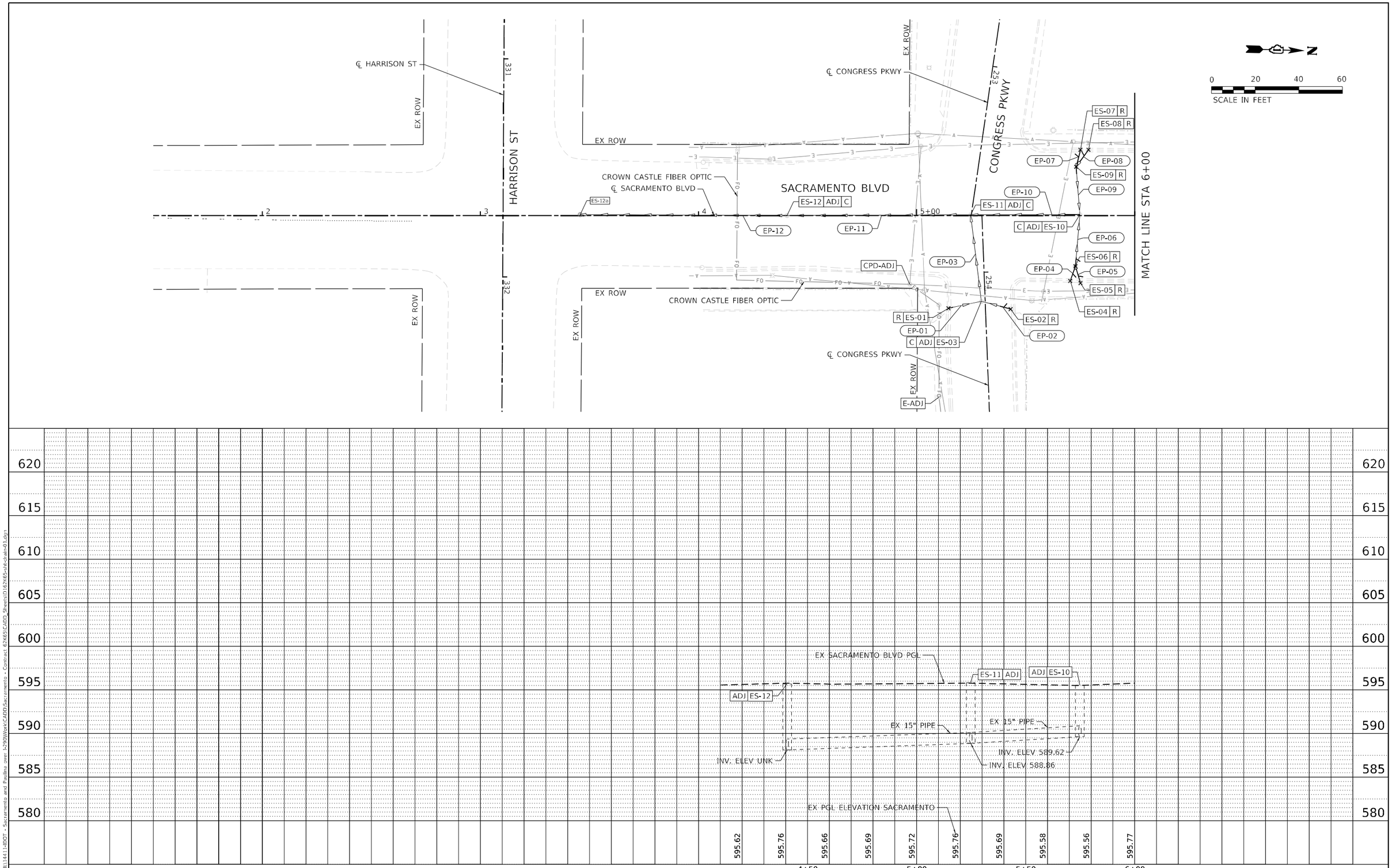

PLAN
NOTE BOOK NO.
SURVEYED
PLOTTED
ALIGNMENT CHECKED
R/W OF WAY CHECKED
CADD FILE NAME
BY
DATE

PROFILE
NOTE BOOK NO.
SURVEYED
PLOTTED
GRADES CHECKED
B.M. NOTED
STRUCTURE NOTATIONS CHKD
BY
DATE

MODEL: Default
FILE NAME: P:\104\114411-IDOT - Sacramento and Pauline over I-290\Work\CADD\Sacramento - Contract 62K65\CADD_Sheets\D162K65-sht-drain-01.dgn

COLLINS ENGINEERS INC.

USER NAME = orush	DESIGNED - OR	REVISED -	
	DRAWN - OR	REVISED -	
PLOT SCALE = 40.0000 ' / in.	CHECKED - RG	REVISED -	
PLOT DATE = 10/14/2025	DATE - 10/13/2025	REVISED -	

STATE OF ILLINOIS
DEPARTMENT OF TRANSPORTATION

FAI–290 (EISENHOWER EXPRESSWAY) AT SACRAMENTO BOULEVARD
EXISTING DRAINAGE AND UTILITY PLAN

SCALE: 1" = 20' | SHEET OF SHEETS | STA. TO STA.

F.A.I. RTE.	SECTION	COUNTY	TOTAL SHEETS	SHEET NO.
290	2019-192-B-R	COOK	237	74
		CONTRACT NO. 62K65		
		ILLINOIS FED. AID PROJECT		

PLAN
SURVEYED
PLOTTED
ALIGNMENT CHECKED
R.O.W. CHECKED
CADD FILE NAME
NOTE BOOK
NO.
BY
DATE

PROFILE
SURVEYED
PLOTTED
GRADES CHECKED
E.G.R. NOTED
STRUCTURE NOTATIONS CHKD
NOTE BOOK
NO.
BY
DATE

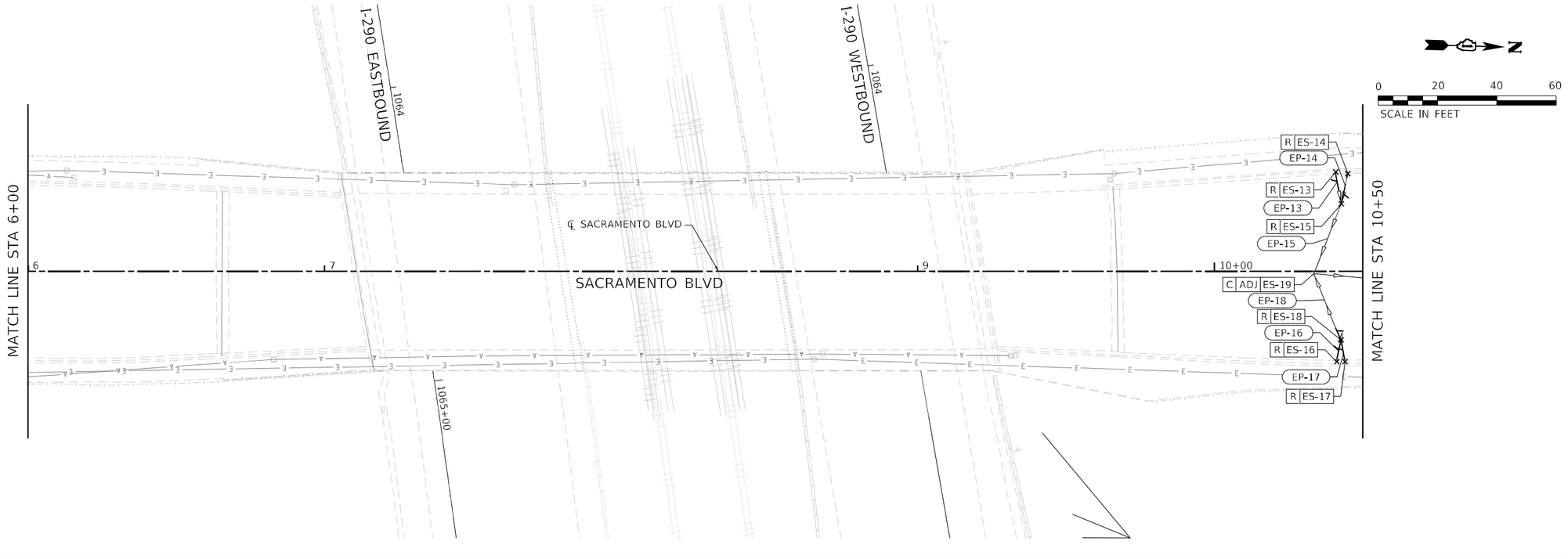

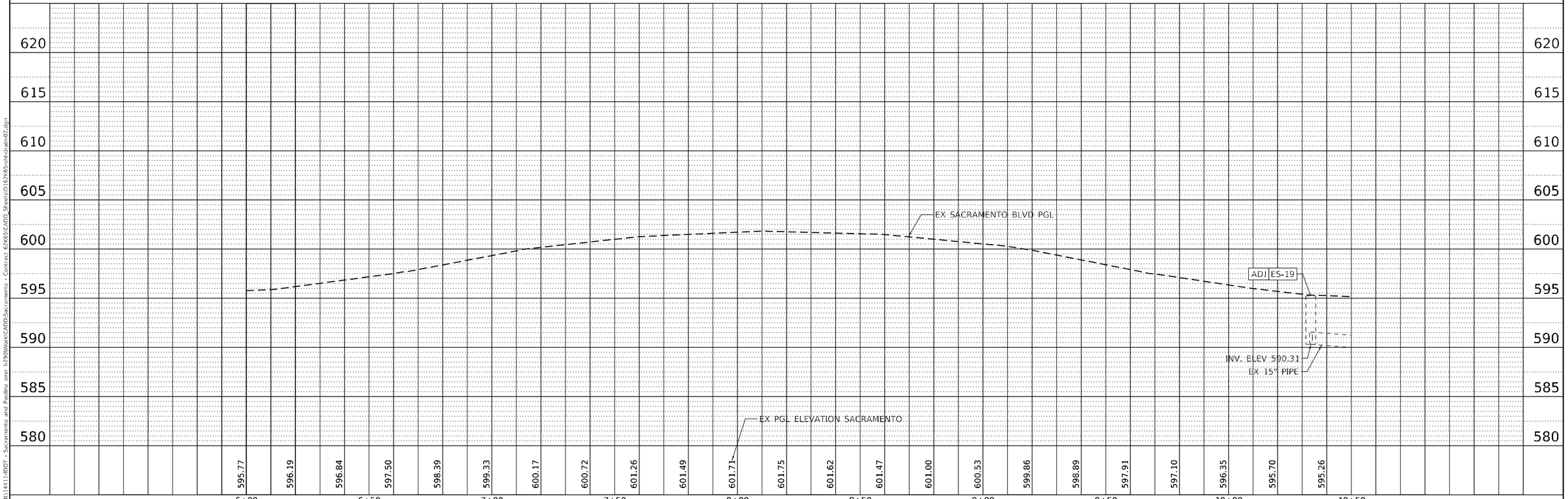

MODEL: Default
FILE NAME: P:\104\1441-IDOT - Sacramento and Paulina over I-290\Work\CADD\Sacramento - Contract 62K65\CADD_Sheets\D162K65-slt-drain-02.dgn

COLLINS ENGINEERS INC.

USER NAME = brush	DESIGNED - OR	REVISED -
	DRAWN - OR	REVISED -
PLOT SCALE = 40.0000 ' / in.	CHECKED - RG	REVISED -
PLOT DATE = 10/14/2025	DATE - 10/13/2025	REVISED -

STATE OF ILLINOIS
DEPARTMENT OF TRANSPORTATION

FAI–290 (EISENHOWER EXPRESSWAY) AT SACRAMENTO BOULEVARD
EXISTING DRAINAGE AND UTILITY PLAN

SCALE: 1" = 20' | SHEET OF SHEETS | STA. | TO STA.

F.A.I. RTE.	SECTION	COUNTY	TOTAL SHEETS	SHEET NO.
290	2019-192-B-R	COOK	237	75
		CONTRACT NO. 62K65		
		ILLINOIS	FED. AID PROJECT	

PLAN
SURVEYED
PLOTTED
ALIGNMENT CHECKED
R.O.W. CHECKED
CADD FILE NAME
NOTE BOOK
NO.
DATE
BY

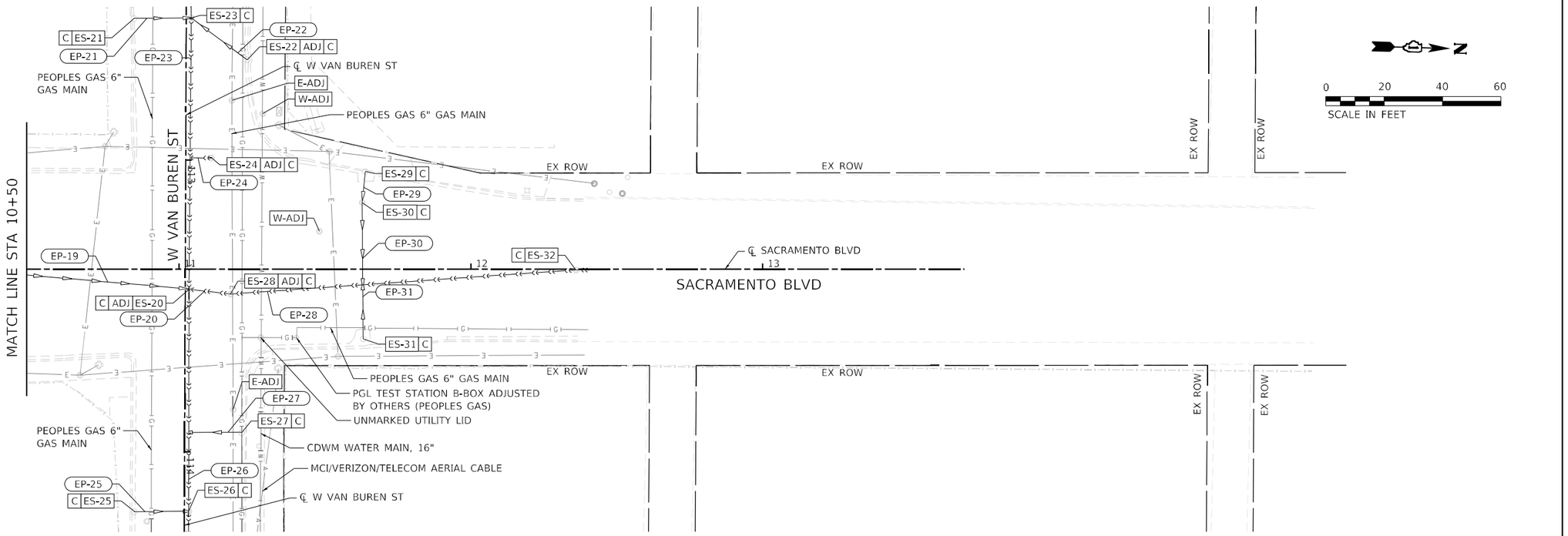

PROFILE
SURVEYED
PLOTTED
ALIGNMENT CHECKED
R.O.W. CHECKED
CADD FILE NAME
NOTE BOOK
NO.
DATE
BY

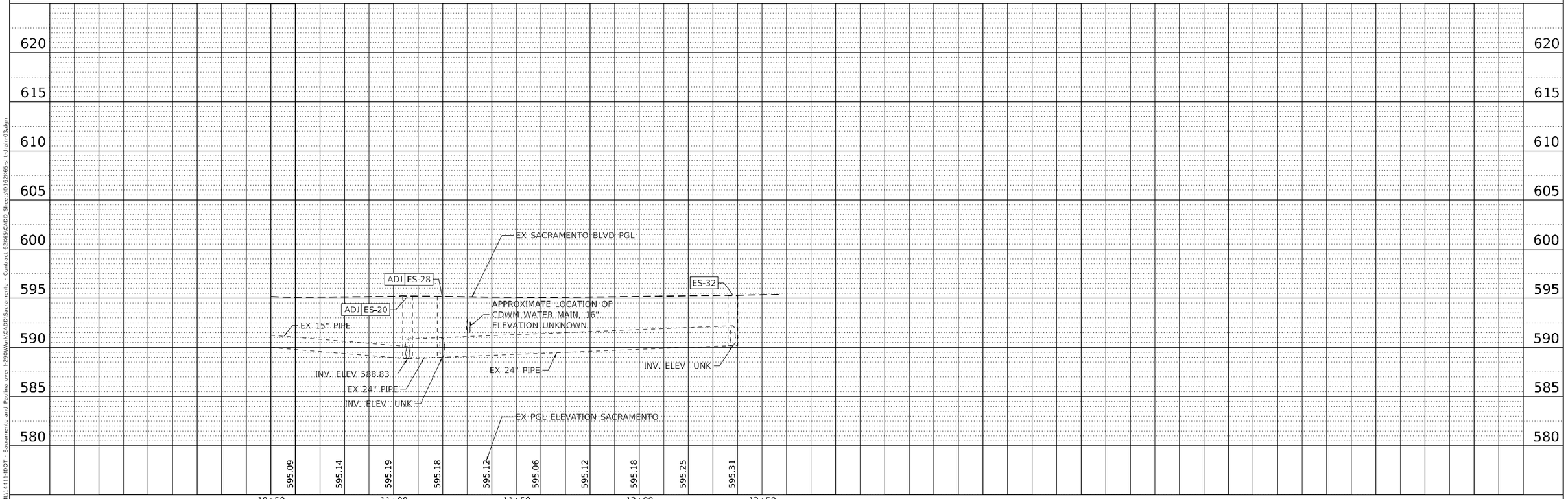

MODEL: Default
FILE NAME: P:\104\1441-IDOT - Sacramento and Paulina over I-290\Work\CADD\Sacramento - Contract 62K65\CADD_Sheets\D162K65-sht-draln-03.dgn

COLLINS ENGINEERS INC.

USER NAME = drush	DESIGNED - OR	REVISED -
	DRAWN - OR	REVISED -
PLOT SCALE = 40.0000 ' / in.	CHECKED - RG	REVISED -
PLOT DATE = 10/14/2025	DATE - 10/13/2025	REVISED -

STATE OF ILLINOIS
DEPARTMENT OF TRANSPORTATION

FAI–290 (EISENHOWER EXPRESSWAY) AT SACRAMENTO BOULEVARD
EXISTING DRAINAGE AND UTILITY PLAN

SCALE: 1" = 20' | SHEET OF SHEETS | STA. | TO STA.

F.A.I. RTE.	SECTION	COUNTY	TOTAL SHEETS	SHEET NO.
290	2019-192-B-R	COOK	237	76
		CONTRACT NO. 62K65		
		ILLINOIS	FED. AID PROJECT	

PLAN
SURVEYED
PLOTTED
ALIGNMENT CHECKED
R.T. OF WAY CHECKED
CADD FILE NAME
NOTE BOOK
NO.
BY
DATE

PROFILE
SURVEYED
PLOTTED
GRADES CHECKED
ELEV. NOTED
STRUCTURE NOTATIONS CHKD
NOTE BOOK
NO.

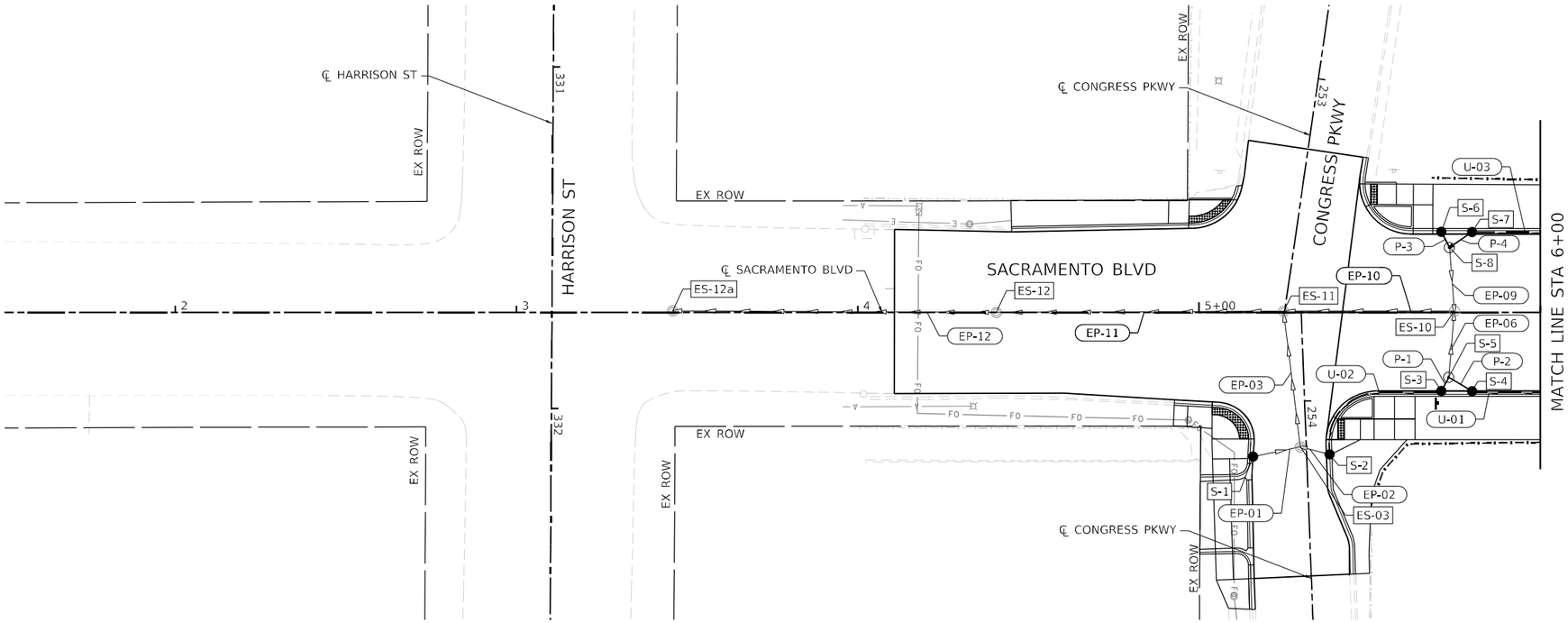

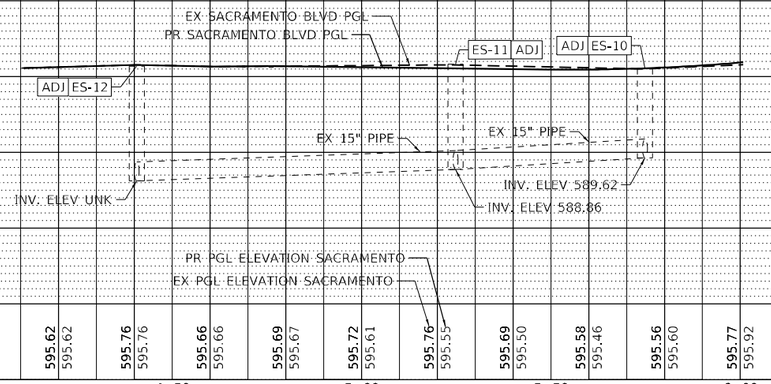

MODEL: Default
FILE NAME: P:\104\1441-IDOT - Sacramento and Paulina over I-290\Work\CADD\Sacramento - Contract 62K65\CADD_Sheets\D162K65-sht-draln-04.dgn

COLLINS ENGINEERS INC.

USER NAME = orush	DESIGNED - OR	REVISED -	
	DRAWN - OR	REVISED -	
PLOT SCALE = 40.0000 ' / in.	CHECKED - RG	REVISED -	
PLOT DATE = 10/14/2025	DATE - 10/13/2025	REVISED -	

STATE OF ILLINOIS
DEPARTMENT OF TRANSPORTATION

FAI–290 (EISENHOWER EXPRESSWAY) AT SACRAMENTO BOULEVARD
PROPOSED DRAINAGE AND UTILITY PLAN

SCALE: 1" = 20' | SHEET OF SHEETS | STA. TO STA.

F.A.I. RTE.	SECTION	COUNTY	TOTAL SHEETS	SHEET NO.
290	2019-192-B-R	COOK	237	77
		CONTRACT NO. 62K65		
		ILLINOIS	FED. AID PROJECT	

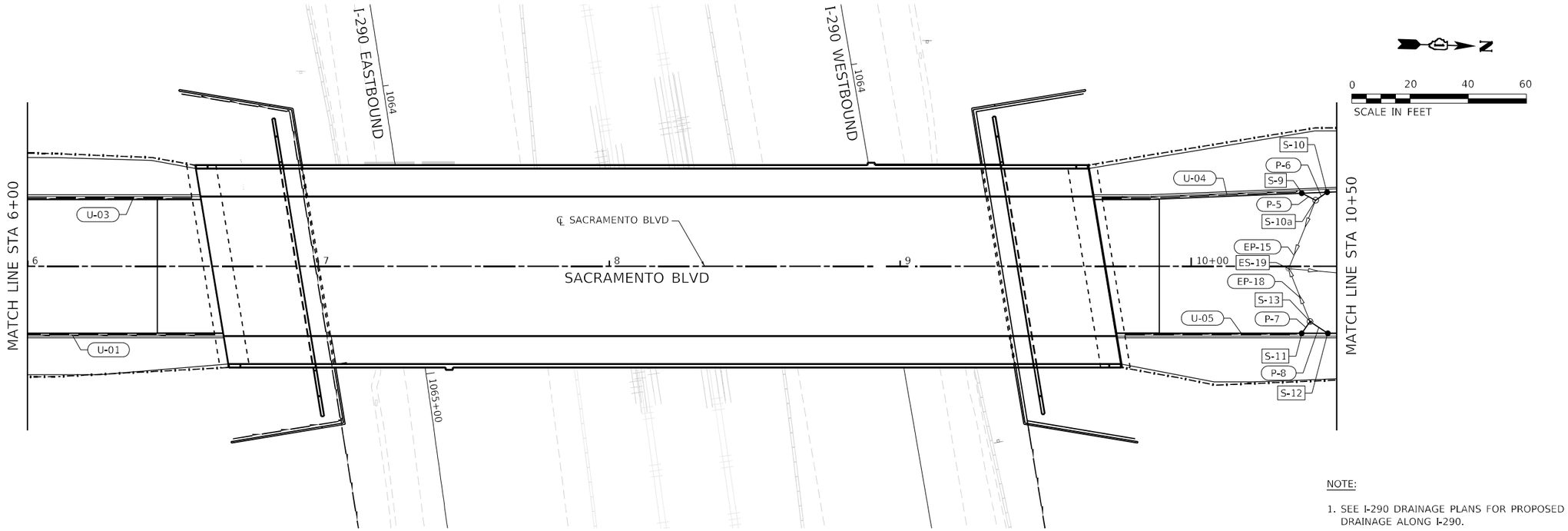

NOTE:

1. SEE I-290 DRAINAGE PLANS FOR PROPOSED DRAINAGE ALONG I-290.

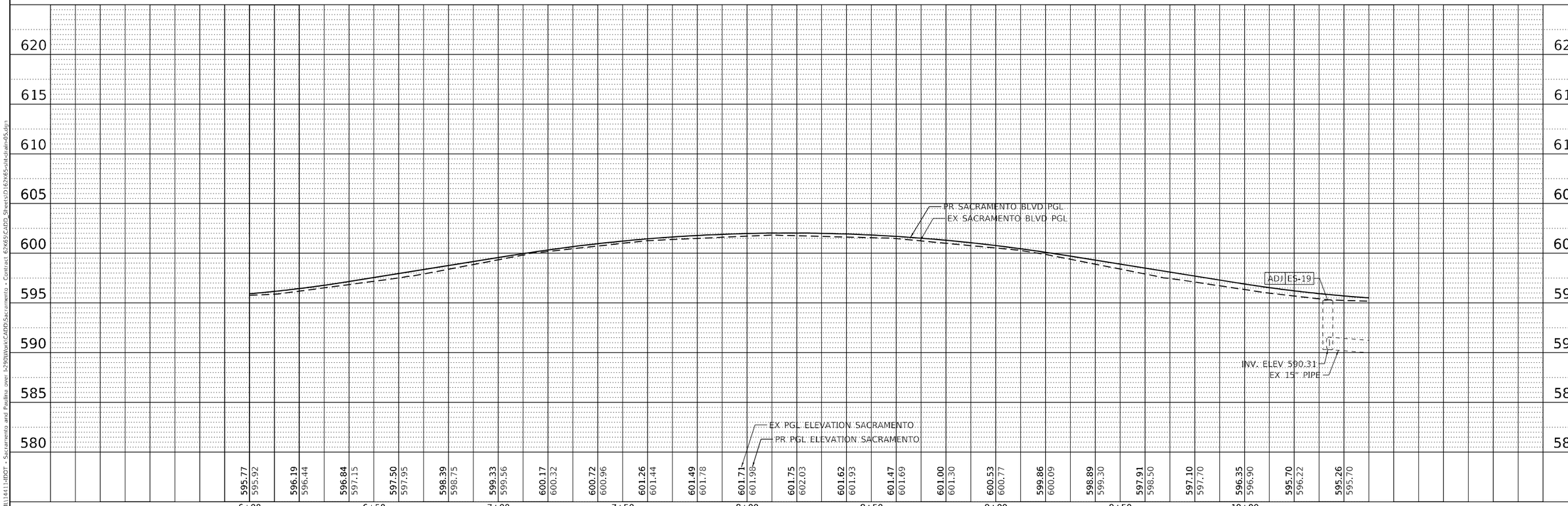

PLAN — SURVEYED / PLOTTED / ALIGNMENT CHECKED / R.O.W. CHECKED / CADD FILE NAME / NOTE BOOK / NO. / BY / DATE

PROFILE — SURVEYED / PLOTTED / GRADES CHECKED / U.M. NOTED / STRUCTURE NOTATIONS CHKD / NOTE BOOK / NO. / BY / DATE

MODEL: Default
FILE NAME: P:\104\1441-RDOT - Sacramento and Paulina over I-290\Work\CADD\Sacramento - Contract 62K65\CADD_Sheets\D162K65-sht-draln-05.dgn

COLLINS ENGINEERS INC.

USER NAME = brush	DESIGNED - OR	REVISED -
	DRAWN - OR	REVISED -
PLOT SCALE = 40.0000 ' / in.	CHECKED - RG	REVISED -
PLOT DATE = 10/14/2025	DATE - 10/13/2025	REVISED -

STATE OF ILLINOIS
DEPARTMENT OF TRANSPORTATION

FAI-290 (EISENHOWER EXPRESSWAY) AT SACRAMENTO BOULEVARD
PROPOSED DRAINAGE AND UTILITY PLAN

SCALE: 1" = 20' | SHEET OF SHEETS | STA. | TO STA.

F.A.I. RTE.	SECTION	COUNTY	TOTAL SHEETS	SHEET NO.
290	2019-192-B-R	COOK	237	78
		CONTRACT NO. 62K65		
		ILLINOIS	FED. AID PROJECT	

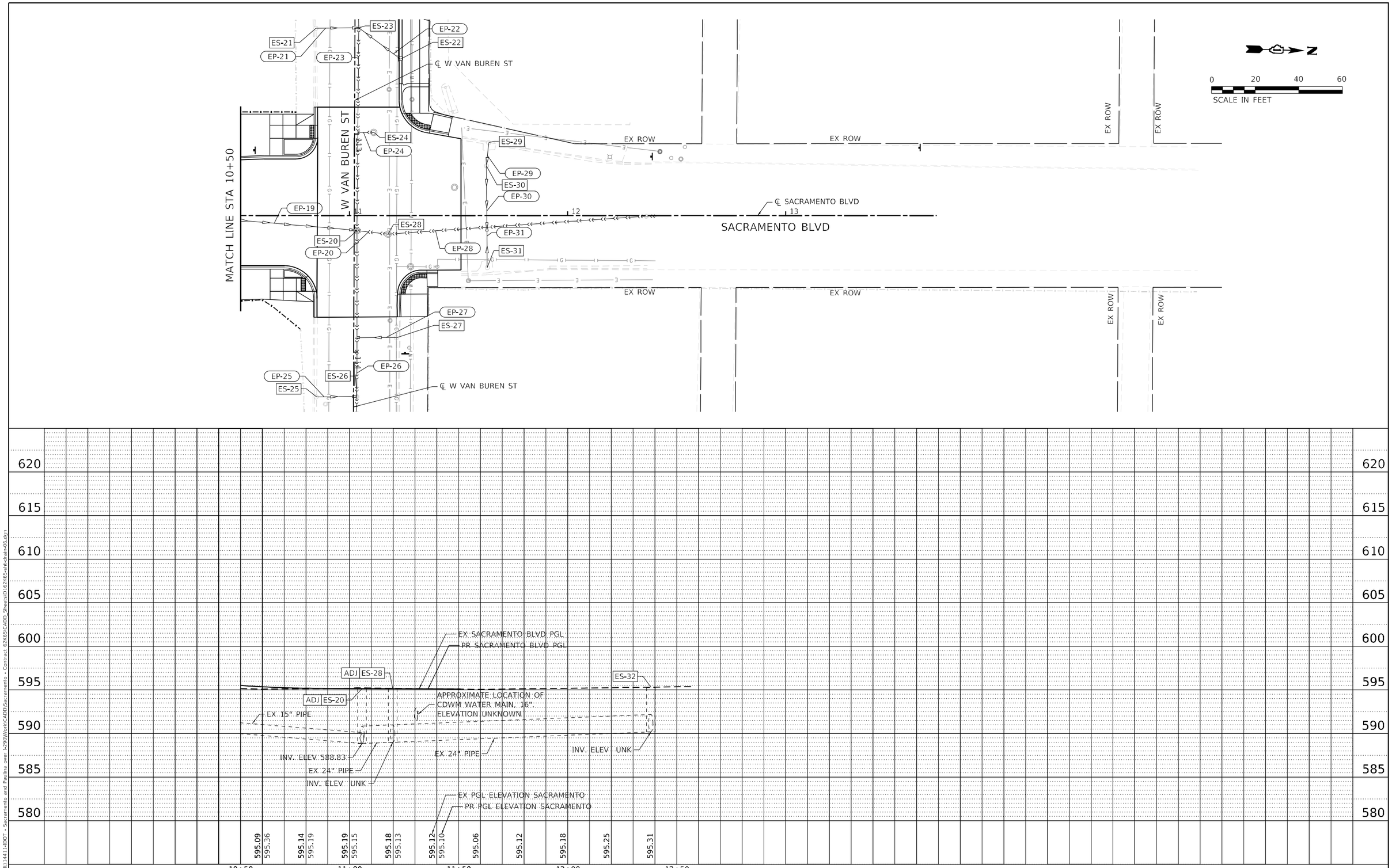

PLAN
NOTE BOOK NO.
SURVEYED
PLOTTED
ALIGNMENT CHECKED
RT. OF WAY CHECKED
CADD FILE NAME
BY
DATE

PROFILE
NOTE BOOK NO.
SURVEYED
PLOTTED
GRADES CHECKED
B.M. NOTED
STRUCTURE NOTATIONS CHKD
BY
DATE

MODEL: Default
FILE NAME: P:\10-IL\14411-IDOT - Sacramento and Paulina over I-290\Work\CADD\Sacramento - Contract 62K65\CADD_Sheets\D162K65-sht-drain-06.dgn

COLLINS ENGINEERS INC.

USER NAME = orush	DESIGNED - OR	REVISED -	
	DRAWN - OR	REVISED -	
PLOT SCALE = 40.0000 ' / in.	CHECKED - RG	REVISED -	
PLOT DATE = 10/14/2025	DATE - 10/13/2025	REVISED -	

STATE OF ILLINOIS
DEPARTMENT OF TRANSPORTATION

FAI–290 (EISENHOWER EXPRESSWAY) AT SACRAMENTO BOULEVARD
PROPOSED DRAINAGE AND UTILITY PLAN

SCALE: 1" = 20' | SHEET OF SHEETS | STA. TO STA.

F.A.I. RTE.	SECTION	COUNTY	TOTAL SHEETS	SHEET NO.
290	2019-192-B-R	COOK	237	79
		CONTRACT NO. 62K65		
		ILLINOIS FED. AID PROJECT		

PLAN
SURVEYED
PLOTTED
ALIGNMENT CHECKED
R.O.W. CHECKED
CADD FILE NAME
NOTE BOOK
NO.
BY
DATE

PROFILE
SURVEYED
PLOTTED
GRADES CHECKED
B.M. NOTED
STRUCTURE NOTATIONS CHKD
NOTE BOOK
NO.
BY
DATE

MODEL: Default
FILE NAME: P:\104\11441-IDOT - Sacramento and Paulina over I-290\Work\CADD\Sacramento - Contract 62K65\CADD Sheets\D162K65-sht-drain-07.dgn

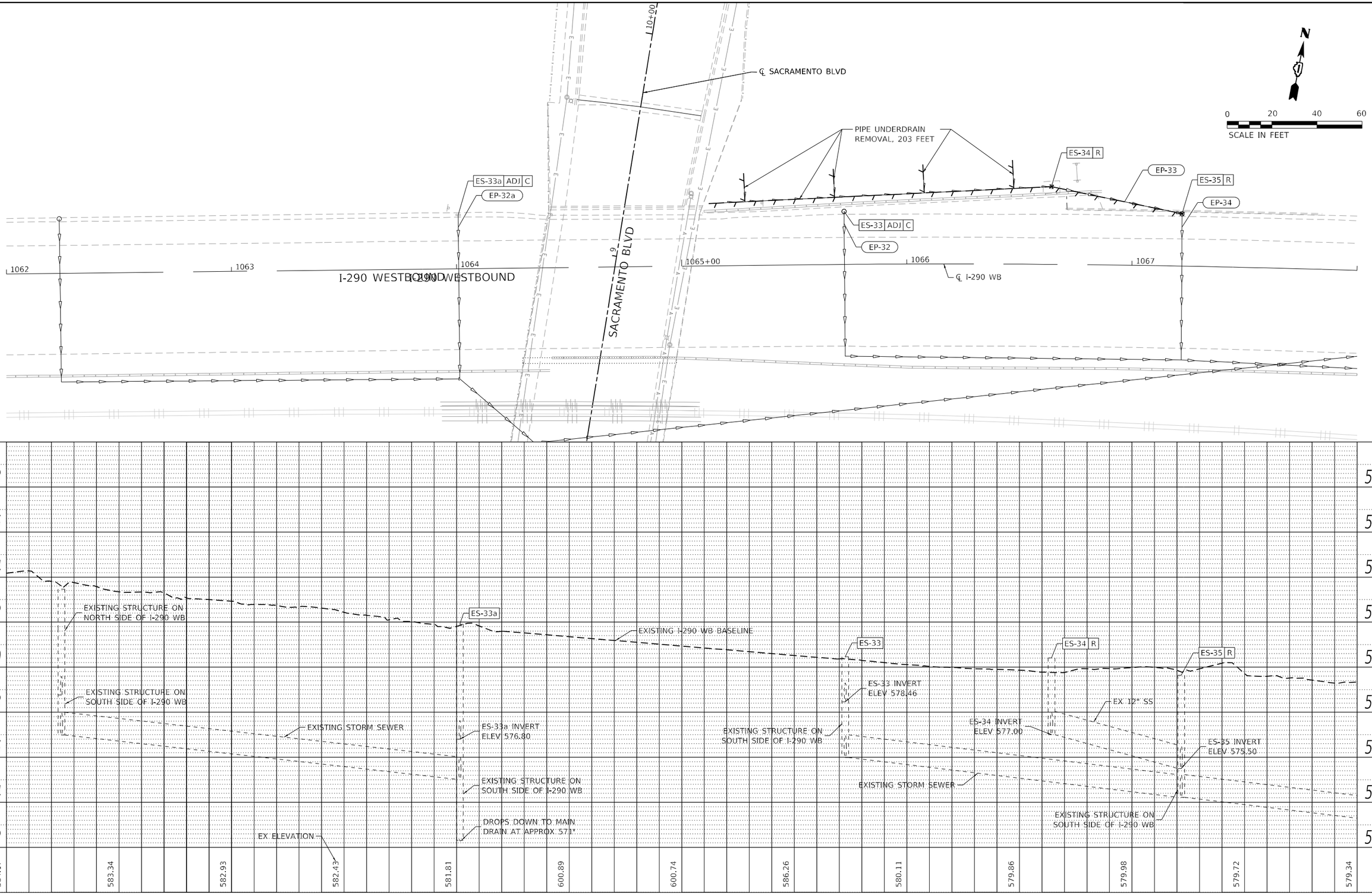

COLLINS ENGINEERS INC.

USER NAME = orush	DESIGNED - OR	REVISED -
	DRAWN - OR	REVISED -
PLOT SCALE = 40.0000 ' / in.	CHECKED - RG	REVISED -
PLOT DATE = 10/14/2025	DATE - 10/13/2025	REVISED -

STATE OF ILLINOIS
DEPARTMENT OF TRANSPORTATION

FAI–290 (EISENHOWER EXPRESSWAY) AT SACRAMENTO BOULEVARD
EXISTING DRAINAGE AND UTILTY PLAN – I–290 WB

SCALE: 1" = 20' | SHEET OF SHEETS | STA. | TO STA.

F.A.I. RTE.	SECTION	COUNTY	TOTAL SHEETS	SHEET NO.
290	2019-192-B-R	COOK	237	80
		CONTRACT NO. 62K65		
		ILLINOIS	FED. AID PROJECT	

PLAN
SURVEYED
PLOTTED
ALIGNMENT CHECKED
R.O.W. CHECKED
CADD FILE NAME
NOTE BOOK
NO.
DATE
BY

I-290 EASTBOUND

I-290 EASTBOUND

SACRAMENTO BLVD

1062

1063

1064

1065+00

1066

1067

EP-36

ES-37 | ADJ

ES-37a | ADJ | C

EP-35

ES-36 | ADJ | C

PIPE UNDERDRAIN
REMOVAL, 95 FEET

℄ I-290 EB

EP-37

ES-38 | ADJ | C

ES-38a | C

℄ SACRAMENTO BLVD

N

0 20 40 60
SCALE IN FEET

PROFILE
SURVEYED
PLOTTED
ALIGNMENT CHECKED
R.O.W. CHECKED
CADD FILE NAME
NOTE BOOK
NO.
DATE
BY

588
586
584
582
580
578
576
574
572

ES-37a

ES-37a INVERT
ELEV 579.39

INV ELEV 578.74

EXISTING STORM SEWER

ES-37

ES-37 INVERT
ELEV 578.46

INV ELEV 577.65

INV ELEV
575.17

EX ELEVATION

DROPS DOWN TO MAIN
DRAIN AT APPROX 571'

EXISTING I-290 EB BASELINE

ES-38

ES-37 INVERT
ELEV 578.46

INV ELEV 576.36

ES-38a

ES-38a INVERT
ELEV 575.23

EXISTING STORM SEWER

INV ELEV 574.26

EXISTING STORM SEWER

583.20 582.84 582.34 581.81 586.05 600.53 601.61 583.09 579.91 579.44 579.19 578.98

1062+00 1063+00 1064+00 1065+00 1066+00 1067+00

MODEL: Default
FILE NAME: P:\104\11411-IDOT - Sacramento and Paulina over I-290\Work\CADD\Sacramento - Contract 62K65\CADD Sheets\D162K65-sht-drain-08.dgn

COLLINS ENGINEERS INC.

USER NAME = drush	DESIGNED - OR	REVISED -
	DRAWN - OR	REVISED -
PLOT SCALE = 40.0000 ' / in.	CHECKED - RG	REVISED -
PLOT DATE = 10/14/2025	DATE - 10/13/2025	REVISED -

STATE OF ILLINOIS
DEPARTMENT OF TRANSPORTATION

FAI–290 (EISENHOWER EXPRESSWAY) AT SACRAMENTO BOULEVARD
EXISTING DRAINAGE AND UTILITY PLAN – I–290 EB

SCALE: 1" = 20' | SHEET OF SHEETS | STA. | TO STA.

F.A.I. RTE.	SECTION	COUNTY	TOTAL SHEETS	SHEET NO.
290	2019-192-B-R	COOK	237	81
		CONTRACT NO. 62K65		
		ILLINOIS	FED. AID PROJECT	

NOTE:

1. FOR REMOVAL OF EXISTING DRAINAGE ITEMS SEE DRAINAGE REMOVAL PLANS.

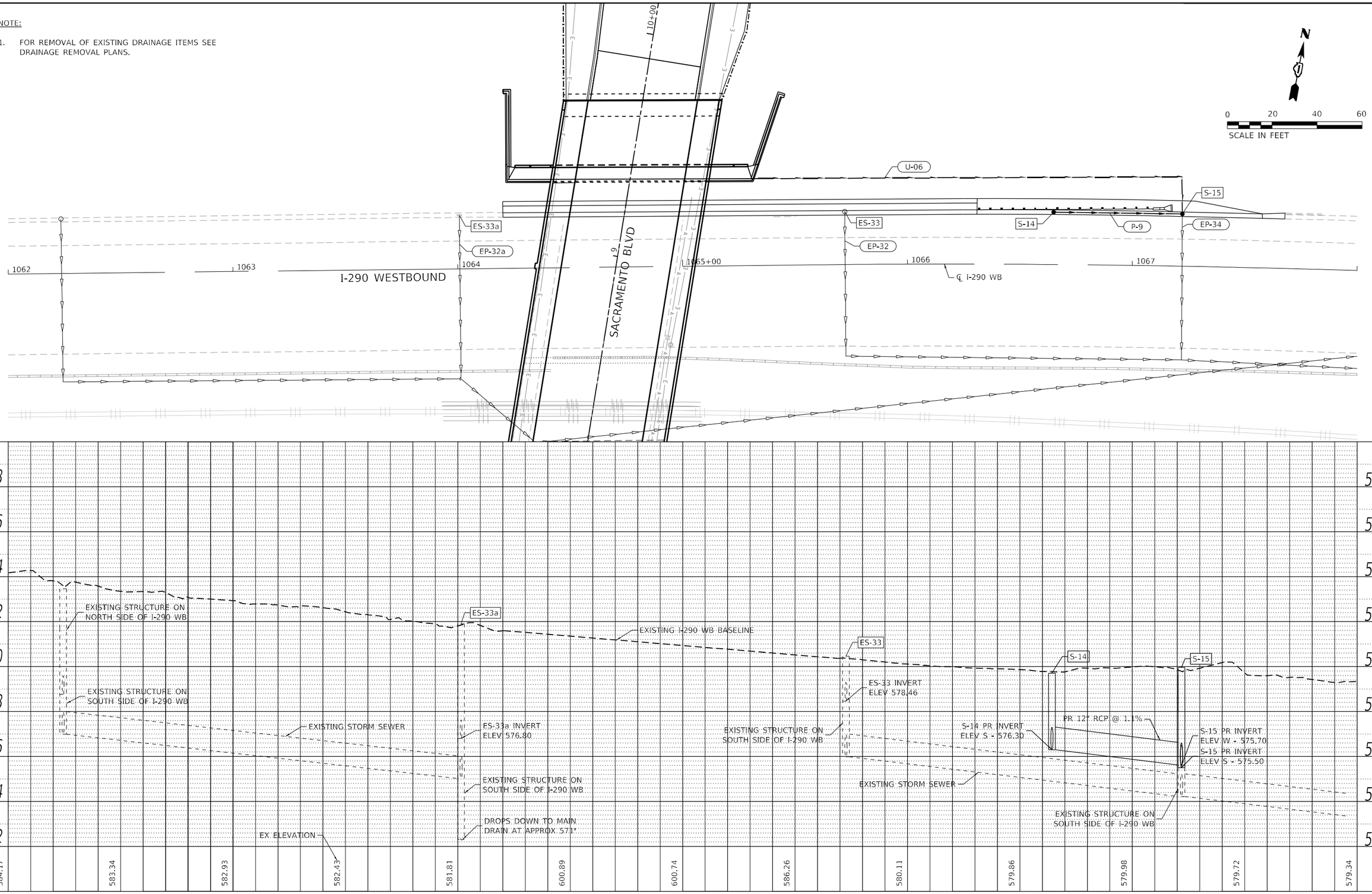

PLAN — NOTE BOOK NO. — SURVEYED — PLOTTED — ALIGNMENT CHECKED — R/W OF WAY CHECKED — CADD FILE NAME — BY — DATE

PROFILE — NOTE BOOK NO. — SURVEYED — PLOTTED — GRADES CHECKED — B.M. NOTED — STRUCTURE NOTATIONS CHKD — BY — DATE

MODEL: Default
FILE NAME: P:\10-IL\14411-IDOT - Sacramento and Pauline over I-290\Work\CADD\Sacramento - Contract 62K65\CADD Sheets\D162K65-sht-drain-09.dgn

COLLINS ENGINEERS INC.

USER NAME = orush	DESIGNED - OR	REVISED -	
	DRAWN - OR	REVISED -	
PLOT SCALE = 40.0000 ' / in.	CHECKED - RG	REVISED -	
PLOT DATE = 10/14/2025	DATE - 10/13/2025	REVISED -	

STATE OF ILLINOIS
DEPARTMENT OF TRANSPORTATION

FAI–290 (EISENHOWER EXPRESSWAY) AT SACRAMENTO BOULEVARD
PROPOSED DRAINAGE AND UTILITY PLAN – I–290 WB

SCALE: 1" = 20' | SHEET OF SHEETS | STA. TO STA.

F.A.I. RTE.	SECTION	COUNTY	TOTAL SHEETS	SHEET NO.
290	2019-192-B-R	COOK	237	82
		CONTRACT NO. 62K65		
		ILLINOIS	FED. AID PROJECT	

I-290 EASTBOUND

SACRAMENTO BLVD

1062 1063 1064 1065+00 1066 1067

℄ I-290 EB

EP-36 ES-37 EP-35 ES-36 EP-37 ES-38 U-07

ES-37a ES-38a

NOTE:

1. FOR REMOVAL OF EXISTING DRAINAGE ITEMS SEE DRAINAGE REMOVAL PLANS.

N

0 20 40 60

SCALE IN FEET

PLAN
SURVEYED
PLOTTED
ALIGNMENT CHECKED
R.O.W. CHECKED
CADD FILE NAME
NOTE BOOK
NO.
BY
DATE

PROFILE
SURVEYED
PLOTTED
CROSS SECTIONS CHECKED
E.M., NOTED
STRUCTURE NOTATIONS CHKD
NOTE BOOK
NO.
BY
DATE

ES-37a

ES-37a INVERT ELEV 579.39

INV ELEV 578.74

EXISTING STORM SEWER

ES-37

ES-37 INVERT ELEV 578.46

INV ELEV 577.65

INV ELEV 575.17

EX ELEVATION

DROPS DOWN TO MAIN DRAIN AT APPROX 571'

EXISTING I-290 EB BASELINE

ES-38

ES-37 INVERT ELEV 578.46

INV ELEV 576.36

ES-38a

ES-38a INVERT ELEV 575.23

INV ELEV 574.26

EXISTING STORM SEWER

583.20 582.84 582.34 581.81 586.05 600.53 601.61 583.09 579.91 579.44 579.19 578.98

1062+00 1063+00 1064+00 1065+00 1066+00 1067+00

MODEL: Default
FILE NAME: P:\104\1441-IDOT - Sacramento and Paulina over I-290\Work\CADD\Sacramento - Contract 62K65\CADD Sheets\D162K65-sht-draln-10.dgn

COLLINS ENGINEERS INC.

USER NAME = brush	DESIGNED - OR	REVISED -
	DRAWN - OR	REVISED -
PLOT SCALE = 40.0000 ' / in.	CHECKED - RG	REVISED -
PLOT DATE = 10/14/2025	DATE - 10/13/2025	REVISED -

STATE OF ILLINOIS
DEPARTMENT OF TRANSPORTATION

FAI–290 (EISENHOWER EXPRESSWAY) AT SACRAMENTO BOULEVARD
PROPOSED DRAINAGE AND UTILITY PLAN – I–290 EB

SCALE: 1" = 20' | SHEET OF SHEETS | STA. | TO STA.

F.A.I. RTE.	SECTION	COUNTY	TOTAL SHEETS	SHEET NO.
290	2019-192-B-R	COOK	237	83
		CONTRACT NO. 62K65		
	ILLINOIS	FED. AID PROJECT		

EROSION CONTROL GENERAL NOTES

1. DIRECT OR INDIRECT PUMPING OF SEDIMENT-LADEN WATER INTO A STORMWATER FACILITY WITHOUT FILTRATION IS PROHIBITED.

2. RUNOFF FROM EXCAVATED AREAS SHALL LEAVE THE SITE THROUGH SEDIMENT CONTROL DEVICES SHOWN IN IDOT STD. 280001-07, AND/OR NRCS DETAILS FROM THE MOST RECENT VERSION OF THE ILLINOIS URBAN MANUAL.

3. THE CONTRACTOR SHALL SURROUND ANY NECESSARY EARTH STOCKPILES WITH PERIMETER EROSION BARRIER.

4. ALL ESC MEASURES SHOULD BE CHECKED WEEKLY AND AFTER EACH RAINFALL, 0.5 INCHES OR GREATER. ADDITIONALLY DURING WINTER MONTHS, ALL MEASURES SHOULD BE CHECKED AFTER EACH SNOWMELT.

5. TEMPORARY OR PERMANENT STABILIZATION SHALL BE INITIATED IMMEDIATELY UPON COMPLETION OF DISTURBANCE OR IF THE WORK AREA IS TO BE LEFT UNDISTURBED FOR 14 DAYS OR MORE.

6. ALL WASTE GENERATED AS A RESULT OF THE PROJECT INCLUDING DISCARDED BUILDING MATERIALS, CONCRETE TRUCK WASHOUT, CHEMICALS, LITTER, SANITARY WASTE, OR ANY OTHER WASTE SHALL BE PROPERLY DISPOSED OF AND BE PREVENTED FROM BEING CARRIED OFF THE SITE BY EITHER WIND OR WATER.

7. ALL EXPOSED IDLE EARTH, INCLUDING EARTH STOCKPILES, WILL BE SEEDED WITH TEMPORARY EROSION CONTROL SEEDING. THE APPLICATION RATE FOR TEMPORARY EROSION CONTROL SEEDING IS 100 POUNDS PER ACRE FOR THREE APPLICATIONS.

8. ALL TEMPORARY EROSION AND SEDIMENT CONTROL MEASURES SHALL BE REMOVED WITHIN 30 DAYS OF ACHIEVING PERMANENT SOIL STABILIZATION. TRAPPED SEDIMENT AND OTHER DISTURBED SOILS RESULTING FROM TEMPORARY MEASURES SHALL BE PROPERLY DISPOSED OF AND THE AREA PERMANENTLY STABILIZED.

9. ANY LOOSE MATERIAL DEPOSITION IN THE FLOW LINE OF DRAINAGE STRUCTURES, WHICH OBSTRUCTS THE NATURAL FLOW OF WATER, SHALL BE REMOVED AT THE CLOSE OF EACH WORKING DAY. PRIOR TO ACCEPTANCE OF THE IMPROVEMENT, ALL DRAINAGE STRUCTURES SHALL BE FREE OF DIRT AND DEBRIS. THIS WORK WILL NOT BE PAID FOR SEPARATELY BUT SHALL BE CONSIDERED AS INCIDENTAL.

10. MULCH METHOD 2 SHOULD BE APPLIED TO SLOPES FOR TEMPORARY STABILIZATION PRIOR TO SEASONS WHEN TEMPORARY SEED WILL NOT GERMINATE, FOR EXAMPLE MID-JULY OR DURING WINTER.

11. ALL ESC MEASURES WILL BE MAINTAINED IN ACCORDANCE WITH THE IDOT EROSION AND SEDIMENT CONTROL FIELD GUIDE FOR CONSTRUCTION INSPECTION FOUND ON THE CONSTRUCTION TAB AT: (https://idot.illinois.gov/transportation-system/environment/storm-water-management-program/erosion-and-sediment-control/construction.html)

12. THE CONTRACTOR WILL ASSUME RESPONSIBILITY FOR MAINTENANCE OF ALL SOIL EROSION CONTROL DURING CONSTRUCTION.

13. THE CONTRACTOR SHOULD PROVIDE TO THE RE A PLAN TO ENSURE THAT A STABILIZED FLOW LINE WILL BE PROVIDED DURING STORM SEWER CONSTRUCTION. THE USE OF A STABILIZED FLOW LINE BETWEEN THE INSTALLED STORM SEWER AND OPEN DISTURBANCE WILL REDUCE THE POTENTIAL FOR THE OFFSITE DISCHARGE OF SEDIMENT BEARING WATERS, ESPECIALLY WHEN RAIN IS FORCASTED, SO THAT FLOW WILL NOT ERODE. LACK OF AN APPROVED PLAN OR FAILURE TO COMPLY WILL RESULT IN AN ESC DEFICIENCY DEDUCTION.

14. A DEPARTMENT OF THE ARMY (DA) PERMIT IS NOT REQUIRED TO COMPLETE THE PROPOSED WORK. ANY UNPERMITTED DISCHARGE INTO AN AREA WITHIN THE JURISDICTION OF THE DA MAY RESULT IN CIVIL OR CIMINAL ENFORCEMENT UNDER THE CLEAN WATER ACT, 33 U.S.C. SEC. 1319.

15. UNDER NO CIRCUMSTANCES SHALL THE CONTRACTOR PROLONG FINAL GRADING AND SHAPING SO THAT THE ENTIRE PROJECT CAN BE PERMANENTLY SEEDED AT ONE TIME.

16. EROSION CONTROL ITEMS ARE CONSIDERED TO BE A HIGH PRIORITY ON THIS CONTRACT. THE CONTRACTOR IS RESPONSIBLE FOR THE INSTALLATION OF ANY ADDITIONAL EROSION CONTROL MEASURES NECESSARY TO PREVENT EROSION AND SEDIMENTATION AS DETERMINED BY THE RE.

17. EXISTING VEGETATED AREAS (TREES, SHRUBS, VEGETATIVE BUFFERS, TURF AREAS, ETC.) WHERE DISTURBANCE IS NOT OCCURRING (INCLUDING AREAS OUTSIDE THE PROJECT LIMITS) SHALL NOT BE DISTURBED TO ENSURE THAT EXISTING VEGETATION IS PRESERVED HEALTHY TO MINIMIZE SOIL EROSION AND TO ELIMINATE SOIL COMPACTION. NO MATERIALS ARE TO BE STORED OR VEHICLES DRIVEN OR PARKED WITHIN THESE UNDISTURBED AREAS AT ANY TIME.

18. TEMPORARY FENCE SHOULD BE ERECTED ALONG THE DRIPLINE OF THE TREES, SHRUBS, AND LANDSCAPED BEDS WITHIN THE LIMITS OF CONSTRUCTION DESIGNATED TO REMAIN TO ESTABLISH A "TREE PROTECTION ZONE" BEFORE ANY WORK BEGINS OR ANY MATERIAL IS DELIVERED TO THE JOBSITE. NO WORK IS TO BE PERFORMED (OTHER THAN ROOT PRUNING), MATERIALS STORED, OR VEHICLES DRIVEN OR PARKED WITHIN THE "TREE PROTECTION ZONE". REMOVE PROTECTIVE TEMPORARY FENCE ONLY AFTER ALL CONSTRUCTION WORK HAS BEEN COMPLETED.

19. THE CONTRACTOR WILL CONTACT THE ROADSIDE DEVELOPMENT UNIT AT 847.705.4171, TO SCHEDULE WALKTHROUGH TO DETERMINE LOCATION OF THE TEMPORARY FENCE FOR TREE PROTECTION AND WHICH TREES MAY REQUIRE ROOT PRUNING, TO SCHEDULE LAYOUT OF AREAS TO BE TREATED WITH HERBICIDE AT LEAST 7 DAYS PRIOR TO THE APPLICATION.

EROSION CONTROL SCHEDULE

LOCATION				INLET FILTERS	INLET PROTECTION (SPECIAL)
ALIGNMENT	STATION	OFFSET	LT/RT	EACH	EACH
CONGRESS PKWY	251+26.01	18	LT	1	
CONGRESS PKWY	254+15.88	7	LT	1	
CONGRESS PKWY	254+15.72	16	RT	1	
I-290 EB	1059+94.05	12	RT	1	
I-290 EB	1061+84.75	14	RT	1	
I-290 EB	1063+60.86	16	RT	1	
I-290 EB	1063+61.63	25	RT	1	
I-290 EB	1065+07.43	18	RT	1	
I-290 EB	1066+64.87	23	RT	1	
I-290 EB	1067+91.32	19	RT	1	
I-290 WB	1062+23.74	24	LT	1	
I-290 WB	1064+00.95	24	LT	1	
I-290 WB	1065+72.31	24	LT	1	
I-290 WB	1066+63.94	35	LT		1
I-290 WB	1067+21.89	23	LT	1	
SACRAMENTO BLVD	4+01.50	24	RT	1	
SACRAMENTO BLVD	4+02.17	24	LT	1	
SACRAMENTO BLVD	4+40.61	0	LT	1	
SACRAMENTO BLVD	5+24.69	0	LT	1	
SACRAMENTO BLVD	5+71.00	23	RT	1	
SACRAMENTO BLVD	5+71.00	24	LT	1	
SACRAMENTO BLVD	5+73.11	19	RT	1	
SACRAMENTO BLVD	5+73.30	19	LT	1	
SACRAMENTO BLVD	5+74.85	0	LT	1	
SACRAMENTO BLVD	5+76.99	24	LT	1	
SACRAMENTO BLVD	5+77.02	23	RT	1	
SACRAMENTO BLVD	10+33.54	1	RT	1	
SACRAMENTO BLVD	10+38.00	23	RT	1	
SACRAMENTO BLVD	10+38.00	25	LT	1	
SACRAMENTO BLVD	10+40.81	19	RT	1	
SACRAMENTO BLVD	10+42.71	23	LT	1	
SACRAMENTO BLVD	10+46.69	25	LT	1	
SACRAMENTO BLVD	10+46.98	23	RT	1	
SACRAMENTO BLVD	11+03.42	7	RT	1	
SACRAMENTO BLVD	11+17.69	9	RT	1	
SACRAMENTO BLVD	11+63.14	24	RT	1	
SACRAMENTO BLVD	11+63.79	33	LT	1	
VAN BUREN ST	112+51.58	18	RT	1	
VAN BUREN ST	112+65.53	21	LT	1	
VAN BUREN ST	112+99.22	9	LT	1	
VAN BUREN ST	113+93.39	20	LT	1	
VAN BUREN ST	114+20.66	17	RT	1	
VAN BUREN ST	115+16.44	15	RT	1	
			TOTAL:	42	1

EROSION CONTROL SCHEDULE (CONT.)

LOCATION				TEMPORARY FENCE	TEMPORARY EROSION CONTROL SEEDING	PERIMETER EROSION BARRIER
ALIGNMENT	FROM STATION	TO STATION	OFFSET	FOOT	POUND	FOOT
SACRAMENTO BLVD	4+97.13	5+11.15	LT		1	
SACRAMENTO BLVD	5+51.57	7+08.58	LT	454	137	457
SACRAMENTO BLVD	5+51.29	7+17.17	RT	500	91	418
SACRAMENTO BLVD	9+13.21	10+83.77	LT	398	98	436
SACRAMENTO BLVD	9+24.70	10+83.50	RT	60	50	323
			TOTAL:	1412	377	1634

MODEL: Default
FILE NAME: P:\104\1441-IDOT - Sacramento and Paulina over I-290\Work\CADD\Sacramento - Contract 62K65\CADD_Sheets\SD162K65-sht-eros-01.dgn

COLLINS ENGINEERS INC.

USER NAME = omartinez	DESIGNED - OAM	REVISED -	
	DRAWN - OAM	REVISED -	
PLOT SCALE = 40.0000 ' / in.	CHECKED - RAG	REVISED -	
PLOT DATE = 10/15/2025	DATE - 09/12/2025	REVISED -	

STATE OF ILLINOIS
DEPARTMENT OF TRANSPORTATION

FAI–290 (EISENHOWER EXPRESSWAY) AT SACRAMENTO BOULEVARD
EROSION CONTROL GENERAL NOTES AND SCHEDULES

SCALE: NTS | SHEET 1 OF 1 SHEETS | STA. | TO STA.

F.A.I. RTE.	SECTION	COUNTY	TOTAL SHEETS	SHEET NO.
290	2019-192-B-R	COOK	237	84
		CONTRACT NO. 62K65		
	ILLINOIS FED. AID PROJECT			

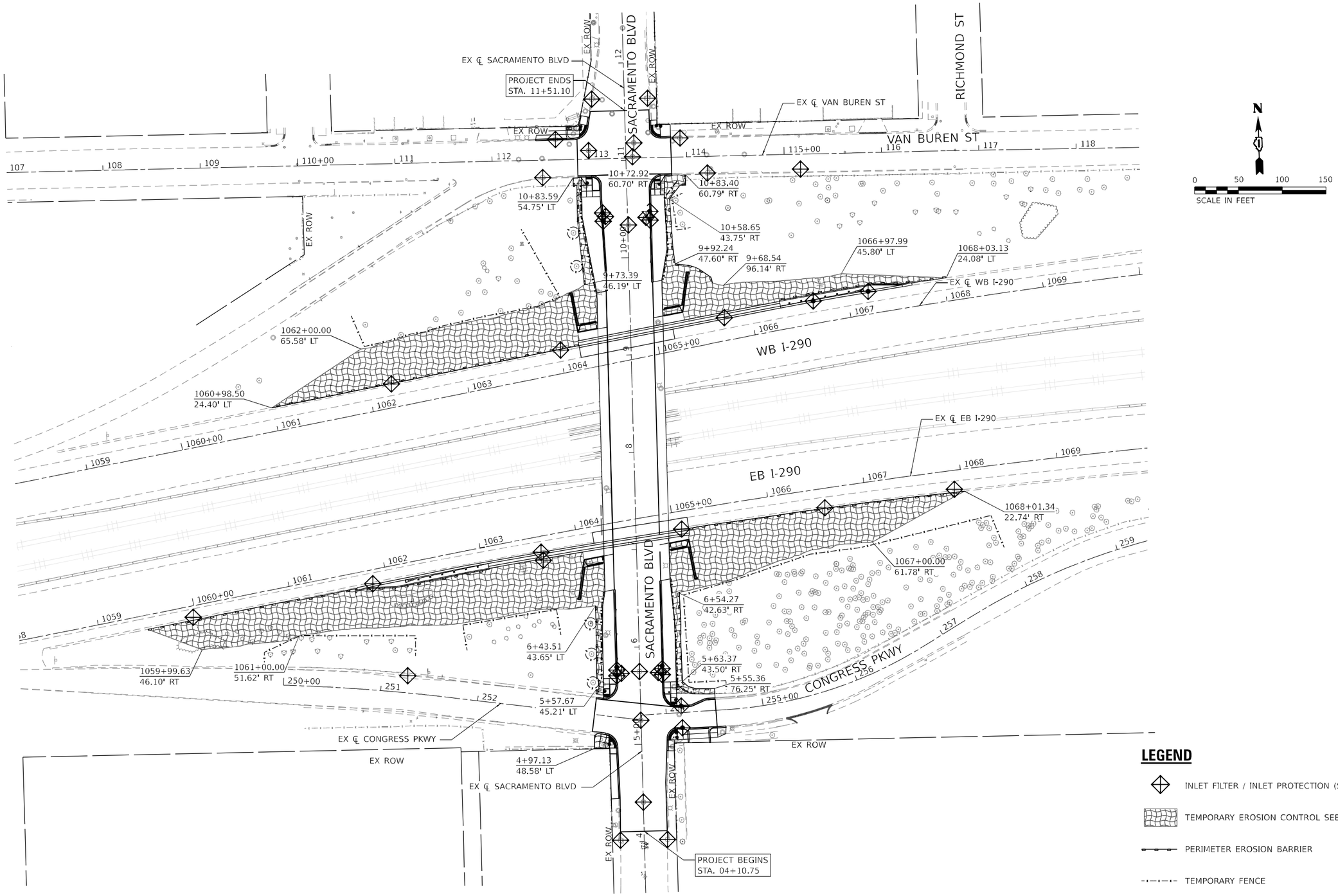

LEGEND

- INLET FILTER / INLET PROTECTION (SPECIAL)
- TEMPORARY EROSION CONTROL SEEDING
- PERIMETER EROSION BARRIER
- TEMPORARY FENCE

MODEL: Default
FILE NAME: P:\104\1441-HDOT - Sacramento and Paulina over I-290\Work\CADD\Sacramento - Contract 62K65\CADD_Sheets\D162K65-sht-eros02.dgn

COLLINS ENGINEERS INC.

USER NAME = amartinez	DESIGNED - OAM	REVISED -	
	DRAWN - OAM	REVISED -	
PLOT SCALE = 100.0000 ' / in.	CHECKED - RAG	REVISED -	
PLOT DATE = 10/15/2025	DATE - 09/12/2025	REVISED -	

STATE OF ILLINOIS
DEPARTMENT OF TRANSPORTATION

FAI-290 (EISENHOWER EXPRESSWAY) AT SACRAMENTO BOULEVARD
EROSION CONTROL PLAN

SCALE: 1" = 50' | SHEET 1 OF 1 SHEETS | STA. | TO STA.

F.A.I. RTE.	SECTION	COUNTY	TOTAL SHEETS	SHEET NO.
290	2019-192-B-R	COOK	237	85
		CONTRACT NO. 62K65		
	ILLINOIS FED. AID PROJECT			

AUTOCAD2006

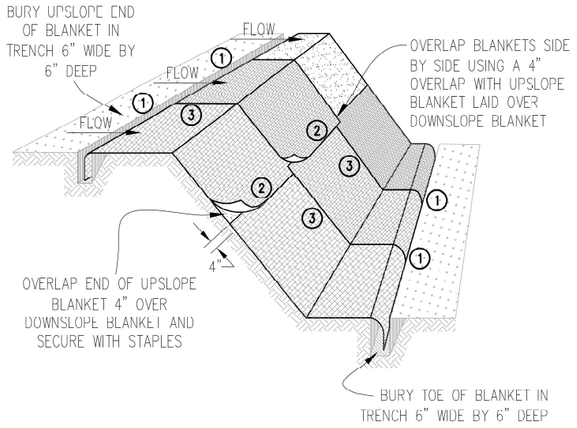

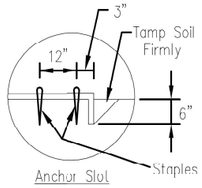

Anchor Slot

DETAIL 1

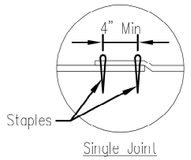

Single Joint

DETAIL 2

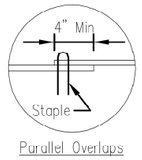

Parallel Overlaps

DETAIL 3

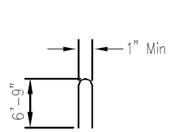

STAPLE DETAIL

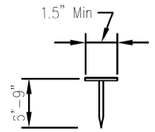

PUSH PIN DETAIL

NOTES:

1. Staples shall be placed in a diamond pallern at 2 per s.y. for sliched blankets. Non-sliched shall use 4 staples per s.y. of material. This equates to 200 staples with stiched blanket and 400 stapels with non-stiched blanket per 100 s.y. of material.
2. Staple or push pin lengths shall be selected based on soil type and conditions. (minimum staple length is 6")
3. Erosion control material shall be placed in contact with the soil over a prepared seedbed.
4. All anchor slots shall be stapled at approximately 12" intervals.

Sheet 1 of 1	Drawing No.	File No. IUM-5.30	EROSION CONTROL BLANKET INSTALLATION DETAILS	Designed	Date
				Drawn D. JOHNSON	11/08
				Checked	
				Approved	

AUTOCAD2006

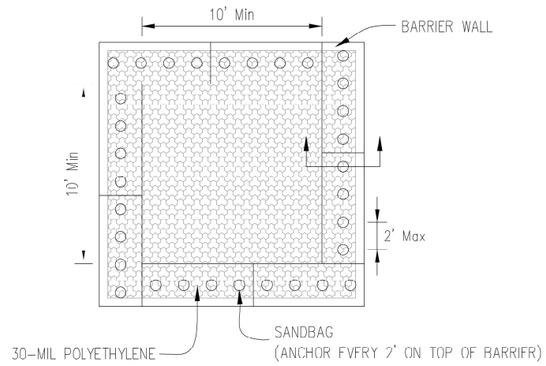

PLAN VIEW

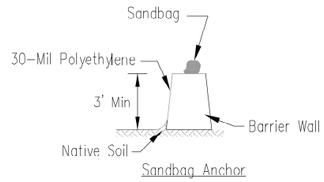

Sandbag Anchor

BARRIER WALL ANCHOR SECTION

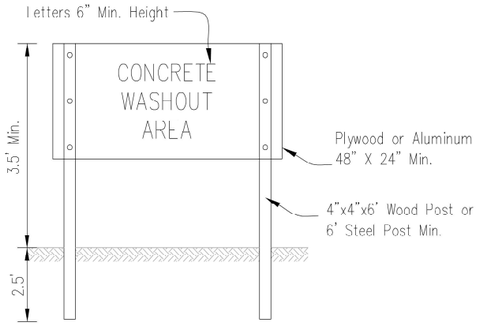

SIGN DETAIL

NOTES:

1. Maintaining temporary concrete washout facilities shall include removing and disposing of hardend concrete and/or slurry and returning the faciliities to a functional condition.
2. Facility shall be cleaned or reconstructed in a new area once washout becomes two-thirds full.

Sheet 3 of 3	Drawing No.	File No. IUM-6.43W	TEMPORARY CONCRETE WASHOUT FACILITY – BARRIER WALL	Designed	Date
				Drawn B. JOHNSON	6/08
				Checked	
				Approved	

MODEL: Default
FILE NAME: P:\10dtl\1441-IDOT - Sacramento and Paulina over I-290\Work\CADD\Sacramento - Contract 62K65\CADD_Sheets\D162K65-eisheros-03.dgn

COLLINS ENGINEERS INC.	USER NAME = amartinez	DESIGNED - OAM	REVISED -
		DRAWN - OAM	REVISED -
	PLOT SCALE = 40.0000 ' / in.	CHECKED - RAG	REVISED -
	PLOT DATE = 10/15/2025	DATE - 09/12/2025	REVISED -

STATE OF ILLINOIS
DEPARTMENT OF TRANSPORTATION

FAI-290 (EISENHOWER EXPRESSWAY) AT SACRAMENTO BOULEVARD
EROSION CONTROL DETAILS

SCALE: NTS | SHEET 1 OF 2 SHEETS | STA. | TO STA.

F.A.I. RTE.	SECTION	COUNTY	TOTAL SHEETS	SHEET NO.
290	2019-192-B-R	COOK	237	86
		CONTRACT NO. 62K65		
		ILLINOIS	FED. AID PROJECT	

INLET PROTECTION - PAVED AREAS
DROP-IN PROTECTION

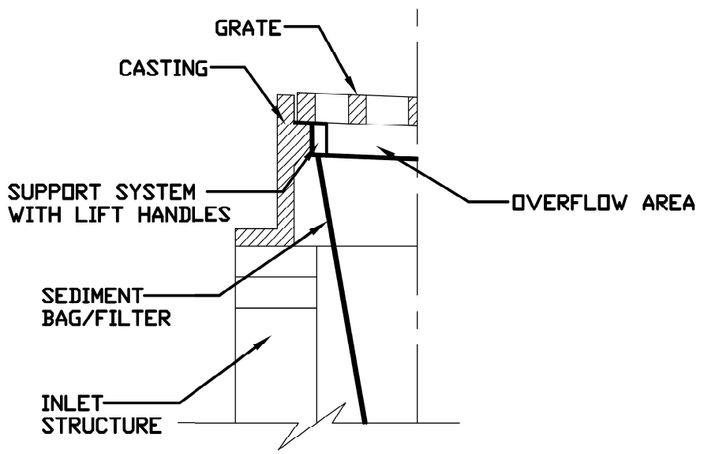

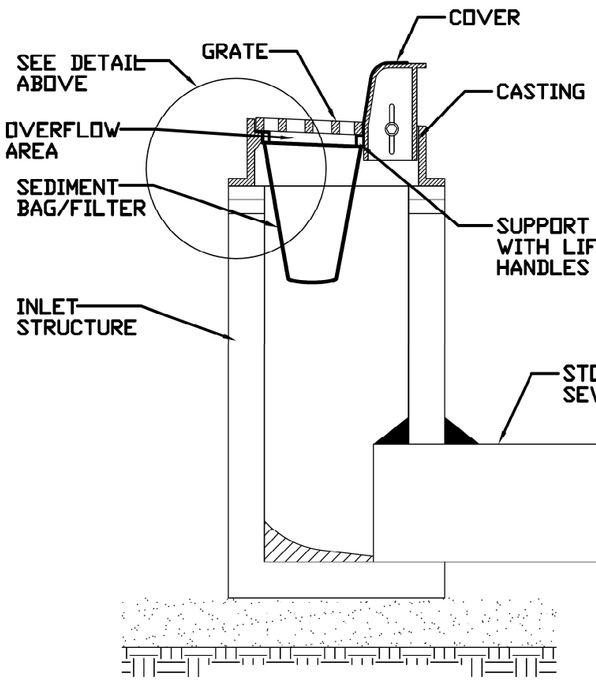

REFERENCE		STANDARD DWG. NO.
Project		IUM-561D
Designed ____ Date ____		SHEET 1 OF 1
Checked ____ Date ____		DATE 01-11-11
Approved ____ Date ____		

INLET PROTECTION -MONOFILAMENT FABRIC BARRIER FENCE

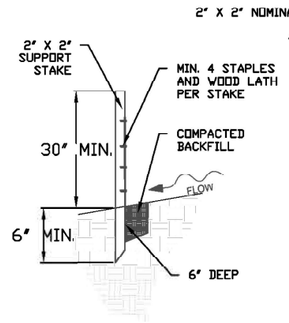

STAKE DETAIL

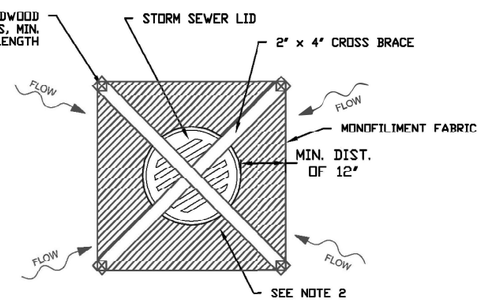

PLAN VIEW

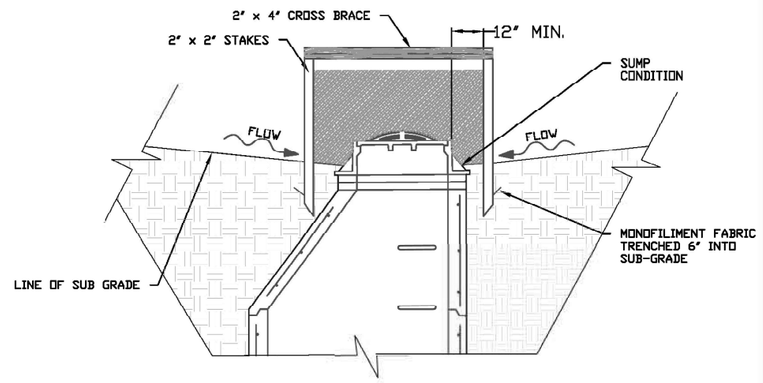

SECTION

NOTES:

1. 2 x 2 nominal hardwood stakes, 4 foot minimum length, driven into ground approximately 18 inches, stakes driven a minimum width of 12 inches away from the drop inlet.
2. Area inside the fence, from edge of fabric to structure, must be stabilized with Erosion Control Blanket, Turf Reinforcement Mat, Geotextile 592 Table 2 Class 2 or CA-7 stone
3. Maximum height of the fabric above the crest of the drop inlet shall be 30". Place the bottom 6 inches of the fabric in a trench and backfill with 6 inches of 95% compacted soil.
4. Stakes must be a maximum of 4 feet apart.
5. A maintenance schedule must maintain a sediment accumulation of less than 50% of the height of the monofilment fabric.
6. Monofilment fabric shall meet the requirement of Material Specification 592 Geotextile Table 1, Class 4.
7. Monofiliment fabric shall be secured to each 2" x 2" nominal hardwood stake with a minimum of 4 steel staple fasteners and wood lath. Wood lath shall be a minimum length of 10 inches. Wire fasteners should be used if metal T-Posts are installed in place of hardwood stakes.

REFERENCE		STANDARD DWG. NO.
Project		IUM-560
Designed ____ Date ____		SHEET 1 OF 1
Checked ____ Date ____		DATE 04-6-15
Approved ____ Date ____		

INLET PROTECTION (SPECIAL)

MODEL: Default
FILE NAME: P:\104\1441-HDOT - Sacramento and Paulina over I-290\Work\CADD\Sacramento - Contract 62K65\CADD Sheets\SD162K65-sht-ero-01.dgn

COLLINS ENGINEERS INC.

USER NAME = omartinez	DESIGNED - OAM	REVISED -	
	DRAWN - OAM	REVISED -	
PLOT SCALE = 40.0000 ' / in.	CHECKED - RAG	REVISED -	
PLOT DATE = 10/15/2025	DATE - 09/12/2025	REVISED -	

STATE OF ILLINOIS
DEPARTMENT OF TRANSPORTATION

FAI-290 (EISENHOWER EXPRESSWAY) AT SACRAMENTO BOULEVARD
EROSION CONTROL DETAILS

SCALE: NTS | SHEET 2 OF 2 SHEETS | STA. | TO STA.

F.A.I. RTE.	SECTION	COUNTY	TOTAL SHEETS	SHEET NO.
290	2019-192-B-R	COOK	237	87
		CONTRACT NO. 62K65		
	ILLINOIS	FED. AID PROJECT		

LANDSCAPING GENERAL NOTES

1. CITY WATER AND SEWER MAINS MAY BE LOCATED IN THE LANDSCAPE AREA.
2. THE CONTRACTOR WILL NOT BE ALLOWED TO PROCEED WITH ANY PLANTING WORK UNTIL ALL ULTILITY OWNERS FIELD LOCATE THEIR FACILITIES WHICH MAY INTERFERE WITH CONSTRUCTION OPERATIONS,
3. THE ACTUAL LOCATION OF PROPOSED LANDSCAPING WILL BE ADJUSTED IN THE FIELD TO AVOID UTILITIES.
4. INTERSEEDING, CLASS 2A IS TO BE USED TO RENOVATE AREAS WHERE EXISTING TURF IS IN POOR CONDITION. EXACT LOCATIONS WILL BE DETERMINED DURING CONSTRUCTION BY THE ENGINEER.
5. UNDERBRUSH OR DEBRIS AT PLANTING LOCATIONS SHALL BE REMOVED AND DISPOSED OF ACCORDING TO SECTION 201 OF THE STANDARD SPECIFICATIONS. THIS WORK WILL NOT BE PAID FOR SEPARATELY, BUT THE COSTS SHALL BE CONSIDERED AS INCLUDED IN THE CONTRACT UNIT PRICES FOR THE CONSTRUCTION ITEMS INVOLVED, AND NO ADDITIONAL COMPENSATION WILL BE ALLOWED.
6. THE CONTRACTOR SHALL CONTACT THE ROADSIDE DEVELOPMENT UNIT AT 847.705.4171 TO SCHEDULE LAYOUT OF INTERSEEDING, TREES, VINES, AND PERENNIALS AT LEAST 7 DAYS PRIOR TO PLANTING.
7. THE CONTRACTOR SHALL OBSERVE AND COMPLY WITH ALL SECTIONS OF THE ILLINOIS CUSTOM SPRAY LAW, INCLUDING LICENSING. CONTRACTOR PERSONNEL APPLYING HERBICIDES SHALL HAVE A VALID PESTICIDE APPLICATOR LICENSE ISSUED BY THE ILLINOIS DEPARTMENT OF AGRICULTURE. THE LICENSED PESTICIDE APPLICATOR SHALL SUBMIT THEIR CURRENT LICENSE TO THE ENGINEER. THE LICENSED PESTICIDE APPLICATOR SHALL BE QUALIFIED AT A MINIMUM IN RIGHT-OF-WAY AND AQUATICS. THE LICENSED APPLICATOR SHALL WORK ON-SITE.

TREE ROOT PRUNING SCHEDULE

LOCATION				TREE ROOT PRUNING
ALIGNMENT	STATION	OFFSET	LT/RT	EACH
SACRAMENTO BLVD	5+64.81	48	LT	1
SACRAMENTO BLVD	5+94.13	49	LT	1
SACRAMENTO BLVD	6+25.46	49	LT	1
SACRAMENTO BLVD	9+92.47	54	LT	1
SACRAMENTO BLVD	10+26.96	56	LT	1
SACRAMENTO BLVD	10+26.96	56	LT	1
			TOTAL:	6

TOPSOIL SCHEDULE

LOCATION				**	**	**	***	
ALIGNMENT	FROM STATION	TO STATION	OFFSET	TOPSOIL EXCAVATION (DEPTH = 6")	TOPSOIL PLACEMENT (DEPTH = 4")	TOPSOIL PLACEMENT (DEPTH = 12")	TOPSOIL ADJUSTED FOR a(5) SOILS	TOPSOIL BALANCE SURPLUS (+) OR SHORTAGE (-)
				CU YD	CU YD	CU YD	CU YD	CU YD
SACRAMENTO BLVD	4+97.13	5+11.15	LT	4	3			1 (+)
SACRAMENTO BLVD	5+51.57	7+08.58	LT	369	239	21	66	43 (+)
SACRAMENTO BLVD	5+51.29	7+17.17	RT	244	155	21	6	62 (+)
SACRAMENTO BLVD	9+13.21	10+83.77	LT	263	168	21	4	70 (+)
SACRAMENTO BLVD	9+24.70	10+83.50	RT	135	83	21		31 (+)
			TOTAL:	1015	648	84	76	207 (+)

** - TOPSOIL EXCAVATED TO A DEPTH OF 6" IN AREAS THAT WILL BE DISTURBED BY PROPOSED WORK.
- TOPSOIL REQUIRED BASED ON AREA OF PROPOSED LANDSCAPING.
- PAY ITEM "TOPSOIL EXCAVATION AND PLACEMENT" WILL BE MEASURED FOR PAYMENT BASED ON THE TOTAL VOLUME OF TOPSOIL EXCAVATED.
- EXCAVATED TOPSOIL IS TO BE STORED EITHER WITHIN CONTRACT'S LIMITS, OR OFF SITE AND THEN PLACED AGAIN FOR LANDSCAPING PURPOSES.
- EXCAVATED TOPSOIL NOT REQUIRED ON THE PROJECT SHALL BE REMOVED FROM THE PROJECT SITE BY THE CONTRACTOR. THIS WORK IS INCLUDED IN PAY ITEM "TOPSOIL EXCAVATION AND PLACEMENT."

*** - EXCAVATED TOPSOIL SHALL BE MANAGED IN ACCORDANCE WITH ARTICLE 669.05(a)(5) OF THE STANDARD SPECIFICATIONS AND CANNOT BE REUSED ON SITE.
- SEE THE REMOVAL AND DISPOSAL OF REGULATED SUBSTANCES (PROJECT SPECIFIC) SPECIAL PROVISION.

LANDSCAPING SCHEDULE

LOCATION				SEEDING, CLASS 2A	SEEDING, CLASS 4	SEEDING, CLASS 5	NITROGEN FERTILIZER NUTRIENT	POTASSIUM FERTILIZER NUTRIENT	EROSION CONTROL BLANKET	SODDING, SALT TOLERANT	SUPPLEMENTAL WATERING
ALIGNMENT	FROM STATION	TO STATION	OFFSET	ACRE	ACRE	ACRE	POUND	POUND	SQ YD	SQ YD	UNIT
SACRAMENTO BLVD	4+97.13	5+11.15	LT				1	1		24	2
SACRAMENTO BLVD	5+51.57	7+08.58	LT	0.50			41	41	2196		
SACRAMENTO BLVD	5+51.29	7+17.17	RT	0.30	0.02	0.02	27	27	1450		
SACRAMENTO BLVD	9+13.21	10+83.77	LT	0.30			29	29	1560		
SACRAMENTO BLVD	9+24.70	10+83.50	RT	0.15	0.01	0.01	15	15	788		
NOMINAL QUANTITY							270	270			105
			TOTAL:	1.25	0.25	0.25	383	383	5994	24	107

LANDSCAPING SCHEDULE (CONT.)

	MOWING	INTERSEEDING, CLASS 2A	MULCH, METHOD 2	TREE, CARYA OVATA (SHAGBARK HICKORY), 2" CALIPER, BALLED AND BURLAPPED	TREE, QUERCUS MACROCARPA (BUR OAK), 2" CALIPER, BALLED AND BURLAPPED	TREE, QUERCUS X WAREI 'NADLER', (KINDRED SPIRIT HYBRID OAK), 2-1/2" CALIPER, BALLED AND BURLAPPED	TREE, CORNUS MAS (CORNELIAN CHERRY DOG WOOD), 6' HEIGHT, SHRUB FORM, BALLED AND BURLAPPED	SHRUB, AESCULUS PARVIFLORA (BOTTLEBRUSH BUCKEYE), CONTAINER GROWN, 5-GALLON	VINE-HYDRANGEA ANOMALA SUBSP. PETIOLARIS (CLIMBING HYDRANGEA), 5-GALLON POT	VINE-PARTHENOCISSUS QUINQUEFOLIA (VIRGINIA CREEPER), 1-GALLON POT	PERENNIAL PLANTS, WOODLAND TYPE, GALLON POT	TRANSPLANTED SALVAGED TREES
	ACRE	ACRE	ACRE	EACH	EACH	EACH	EACH	EACH	EACH	EACH	UNIT	EACH
NOMINAL QUANTITY (SEE NOTE 6)	10	1.5	1.25	4	3	4	12	40	4	92	3	7
TOTAL:	10	1.5	1.25	4	3	4	12	40	4	92	3	7

LANDSCAPING SCHEDULE (CONT.)

	TRANSPLANTED SALVAGED SHRUBS	TRANSPLANTED SALVAGED PERENNIALS	PERENNIAL PLANT CARE	WEED CONTROL, BROADLEAF IN TURF	WEED CONTROL, NON-SELECTIVE AND NON-RESIDUAL	MULCH PLACEMENT 4"	INTERSEEDING (SPECIAL)	WEED CONTROL, BASAL TREATMENT	MOWING (SPECIAL)	INTERSEEDING, CLASS 4A (MODIFIED)	INTERSEEDING, CLASS 5 (MODIFIED)	SHRUB, VIBURNUM DENTATUM CHRISTOM (BLUE MUFFIN ARROWWOOD VIBURNUM), 36" HEIGHT, BALLED AND BURLAPPED	EVERGREEN, THUJA OCCIDENTALIS SMARAGD (EMERALD GREEN AMERICAN ARBORVITAE), 6' HEIGHT, BALLED AND BURLAPPED
	EACH	UNIT	SQ YD	GALLON	GALLON	SQ YD	ACRE	ACRE	ACRE	ACRE	ACRE	EACH	EACH
NOMINAL QUANTITY (SEE NOTE 6)	11	10	575	3	3	500	0.3	5	2	0.7	0.5	3	5
TOTAL:	11	10	575	3	3	500	0.3	5	2	0.7	0.5	3	5

MODEL: Default
FILE NAME: P:\104\1441-RDOT - Sacramento and Paulina over I-290\Work\CADD\Sacramento - Contract 62K65\CADD_Sheets\SD162K65-sht-lndscp401.dgn

COLLINS ENGINEERS INC.

USER NAME = amartinez	DESIGNED - OAM	REVISED -
	DRAWN - OAM	REVISED -
PLOT SCALE = 40.0000 ' / in.	CHECKED - RAG	REVISED -
PLOT DATE = 11/12/2025	DATE - 09/12/2025	REVISED -

STATE OF ILLINOIS
DEPARTMENT OF TRANSPORTATION

FAI–290 (EISENHOWER EXPRESSWAY) AT SACRAMENTO BOULEVARD
LANDSCAPING GENERAL NOTES AND SCHEDULES

SCALE: NTS | SHEET 1 OF 2 SHEETS | STA. | TO STA.

F.A.I. RTE.	SECTION	COUNTY	TOTAL SHEETS	SHEET NO.
290	2019-192-B-R	COOK	237	88
		CONTRACT NO. 62K65		
	ILLINOIS FED. AID PROJECT			

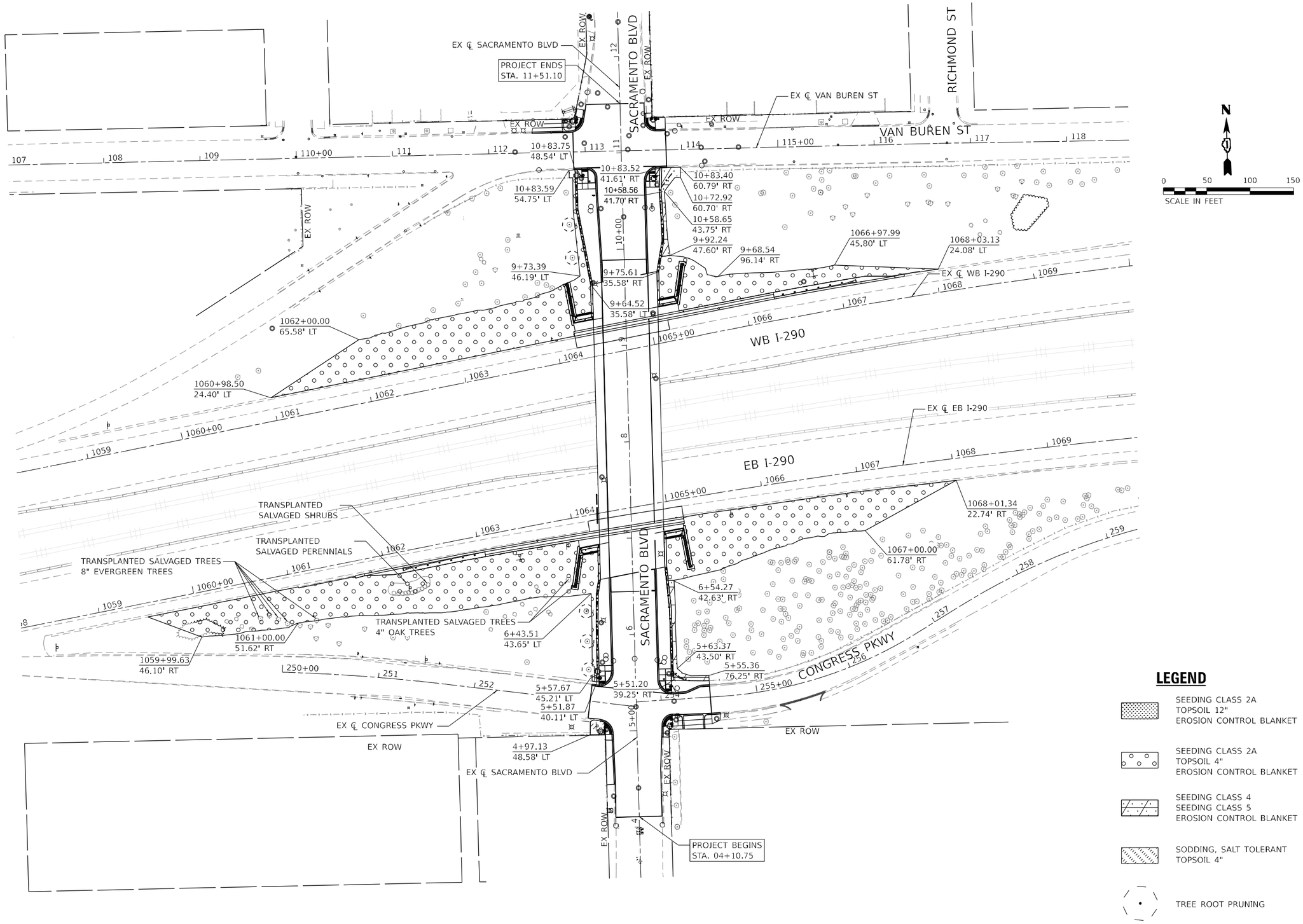

LEGEND

- SEEDING CLASS 2A
  TOPSOIL 12"
  EROSION CONTROL BLANKET
- SEEDING CLASS 2A
  TOPSOIL 4"
  EROSION CONTROL BLANKET
- SEEDING CLASS 4
  SEEDING CLASS 5
  EROSION CONTROL BLANKET
- SODDING, SALT TOLERANT
  TOPSOIL 4"
- TREE ROOT PRUNING

MODEL: Default
FILE NAME: P:\104\1441-HDOT - Sacramento and Paulina over I-290\Work\CADD\Sacramento - Contract 62K65\CADD_Sheets\D162K65-alt-lndscp-02.dgn

COLLINS ENGINEERS INC.

USER NAME = amartinez	DESIGNED - OAM	REVISED -	
	DRAWN - OAM	REVISED -	
PLOT SCALE = 100.0000 ' / in.	CHECKED - RAG	REVISED -	
PLOT DATE = 10/16/2025	DATE - 09/12/2025	REVISED -	

STATE OF ILLINOIS
DEPARTMENT OF TRANSPORTATION

FAI–290 (EISENHOWER EXPRESSWAY) AT SACRAMENTO BOULEVARD
LANDSCAPING PLAN

SCALE: 1" = 50' | SHEET 2 OF 2 SHEETS | STA. | TO STA.

F.A.I. RTE.	SECTION	COUNTY	TOTAL SHEETS	SHEET NO.
290	2019-192-B-R	COOK	237	89
		CONTRACT NO. 62K65		
	ILLINOIS FED. AID PROJECT			

SIGN REMOVALS

LOCATION			SIGN CODE	DESCRIPTION	REMARKS	SIGN WIDTH	SIGN HEIGHT	SIGN AREA	REMOVE SIGN PANEL ASSEMBLY - TYPE A	REMOVE AND RELOCATE SIGN PANEL ASSEMBLY - TYPE A	REMOVE AND RELOCATE SIGN PANEL ASSEMBLY - TYPE B	REMOVE SIGN PANEL - TYPE 1	RELOCATE SIGN PANEL - TYPE 3	REMOVE GROUND MOUNTED SIGN SUPPORT	REMOVE CONCRETE FOUNDATION - GROUND MOUNT
STATION	OFFSET	SIDE				INCHES	INCHES	SQ FT	EACH	EACH	EACH	SQ FT	SQ FT	EACH	EACH
SACRAMENTO BOULEVARD															
04+20.46	30.24'	LT	R7-1-4	NO PARKING TOW ZONE	ON LIGHT POLE	12	18	1.5				1.5			
04+21.33	31.01'	LT	SPECIAL	WARNING SAFE SCHOOL ZONE	ON LIGHT POLE	24	24	4.0	TO REMAIN						
04+33.06	27.35'	RT	M2-1	JUNCTION	ON LIGHT POLE	21	15	2.2				2.2			
		RT	M1-1	INTERSTATE 290	ON LIGHT POLE	24	24	4.0				4.0			
04+34.66	27.37'	RT	R7-1-4	NO PARKING TOW ZONE	ON LIGHT POLE	12	18	1.5				1.5			
05+01.81	37.55'	LT	S4-1-100	SCHOOL SPEED LIMIT 20	ON MAST ARM	24	48	8.0				8.0			
	18.15'	LT	R3-1	NO RIGHT TURN	ON MAST ARM - OVER HEAD	24	24	4.0				4.0			
05+02.37	34.26'	RT	R6-2R	ONE WAY RIGHT	ON MAST ARM	24	30	5.0				5.0			
05+05.04	34.33'	RT	R6-2L	ONE WAY LEFT	ON MAST ARM	24	30	5.0				5.0			
05+06.11	40.68'	LT	R5-1	DO NOT ENTER	ON TELESCOPING POST	30	30	6.3	1.0						
05+57.14	41.04'	LT	R5-1	DO NOT ENTER	ON TELESCOPING POST	20	30	4.2	1.0						
09+30.50	28.30'	RT	M3-4	WEST	ON LIGHT POLE	24	12	2.0				2.0			
		RT	M1-1	INTERSTATE 290	ON LIGHT POLE	24	24	4.0				4.0			
		RT	M6-1L	LEFT ARROW	ON LIGHT POLE	21	15	2.2				2.2			
10+71.20	32.72'	RT	R5-2	NO TRUCKS	ON MAST ARM	24	24	4.0				4.0			
		RT	R6-2L	ONE WAY LEFT	ON MAST ARM	24	30	5.0				5.0			
10+73.86	32.79'	RT	R6-2R	ONE WAY RIGHT	ON MAST ARM	24	30	5.0				5.0			
10+76.29	47.04'	LT	R6-2L	ONE WAY LEFT	ON MAST ARM	24	30	5.0				5.0			
10+78.96	46.97'	LT	R6-2R	ONE WAY RIGHT	ON MAST ARM	24	30	5.0				5.0			
11+32.69	33.94'	RT	R5-2	NO TRUCKS	ON MAST ARM	24	24	4.0				4.0			
	15.90'	RT	R3-1	NO RIGHT TURN	ON MAST ARM - OVER HEAD	24	24	4.0				4.0			
12+19.93	27.20'	LT	M3-4	WEST	ON LIGHT POLE	24	12	2.0				2.0			
		LT	M1-1	INTERSTATE 290	ON LIGHT POLE	24	24	4.0				4.0			
		LT	M6-1R	RIGHT ARROW	ON LIGHT POLE	21	15	2.2				2.2			
CONGRESS PARKWAY															
251+47.22	23.19'	LT	R5-1A	WRONG WAY	ON TELESCOPING POST	24	24	4.0	TO REMAIN						
	23.77'	RT	R5-1A	WRONG WAY	ON TELESCOPING POST	24	24	4.0	TO REMAIN						
VAN BUREN STREET															
112+36.63	23.31'	LT	R7-1-4	NO PARKING TOW ZONE	ON LIGHT POLE	12	18	1.0				1.5			
114+41.84	25.53'	LT	R7-1-4	NO PARKING TOW ZONE	ON LIGHT POLE	24	24	4.0				4.0			
I-290															
1061+93.44	20.89'	RT	N/A	N/A	ABANDONED CONCRETE FOUNDATION	N/A	N/A	N/A							1.0
1062+14.92	34.79'	RT	CUSTOM	CHICAGO GATEWAY GREEN	CIRCULAR SHAPE; RED OUTLINE	60	60	25.0			1.0				
			CUSTOM	CALL BEFORE YOU DIG: 811	WHITE BACKGROUND; BLACK TEXT	60	36	15.0							
1063+43.71	29.55'	RT	CUSTOM	SCOTT'S LAW NOTICE	WHITE BACKGROUND; BLACK TEXT	120	48	40.0					40.0	2.0	
1063+87.97	25.16'	RT	D3-1	SACRAMENTO BLVD 3000 W.	GREEN BACKGROUND; WHITE TEXT	72	18	9.0	1.0						
1065+22.38	63.60'	LT	D3-1	SACRAMENTO AVE 3000 WEST	GREEN BACKGROUND; WHITE TEXT	72	18	9.0				9.0			
1065+78.62	24.26'	RT	D10-2a	MILE 27.0	GREEN BACKGROUND; WHITE TEXT	12	48	4.0		1.0					
1066+79.40	38.83'	LT	CUSTOM	CHICAGO POLICE DISTRICT H	BLUE BACKGROUND; WHITE TEXT	120	48	40.0					40.0	2.0	2.0
SCHEDULE TOTAL									3.0	1.0	1.0	94.1	80.0	4.0	3.0
SCHEDULE PAY									3	1	1	95	80	4	3

MODEL: Default
FILE NAME: pw:\\PW01.hornershifrin.com:HS DOT\Documents\2305600\0-PTB 195-007 D1 Pro.jaSoc_PhII_S\uCollins\CAD Sheets\D162K65_SacramentoD162K65_sht-schedule-01.dgn

HORNER SHIFRIN
WWW.HORNERSHIFRIN.COM

USER NAME = ahernandez	DESIGNED -	REVISED -
	DRAWN -	REVISED -
PLOT SCALE = 10.0000 ' / in.	CHECKED -	REVISED -
PLOT DATE = 10/7/2025	DATE -	REVISED -

STATE OF ILLINOIS
DEPARTMENT OF TRANSPORTATION

SACRAMENTO BOULEVARD OVER FAI-290 (EISENHOWER EXPRESSWAY)
SIGNING SCHEDULE

SCALE: NTS | SHEET 1 OF 2 SHEETS | STA. | TO STA.

F.A.I. RTE.	SECTION	COUNTY	TOTAL SHEETS	SHEET NO.
290	2019-192-B-R	COOK	237	90
		CONTRACT NO. 62K65		
	ILLINOIS FED. AID PROJECT			

PROPOSED SIGNING

LOCATION			SIGN CODE	DESCRIPTION	REMARKS	SIGN WIDTH	SIGN HEIGHT	SIGN AREA	SIGN PANEL - TYPE 1	SIGN PANEL - TYPE 2	WOOD SIGN SUPPORT	INSTALL ROUND STEEL SIGN SUPPORT	
												(POST)	(BASE)
STATION	OFFSET	SIDE				INCHES	INCHES	SQ FT	SQ FT	SQ FT	FOOT	FOOT	EACH
SACRAMENTO BOULEVARD													
04+20.46	30.24'	LT	R7-1-4	NO PARKING TOW ZONE	EX LIGHT POLE; NEW SIGN PANEL (FACING NORTH)	18	18	2.3	2.3				
			SPECIAL	WARNING SAFE SCHOOL ZONE	EX LIGHT POLE; SIGN PANEL TO REMAIN	24	24	4.0	EXISTING SIGN PANEL TO REMAIN				
04+33.06	27.35'	RT	M2-1	JUNCTION	EX LIGHT POLE; NEW SIGN PANELS (FACING SOUTH)	21	15	2.2	2.2				
			M1-1	INTERSTATE 290		24	24	4.0	4.0				
			R7-1-4	NO PARKING TOW ZONE		18	18	2.3	2.3				
04+99.74	33.19'	LT	S4-1-100	SCHOOL; SPEED LIMIT 20	NEW SIGNAL POST; NEW SIGN PANEL (FACING NORTH)	24	48	8.0	8.0				
	18.15'	LT	R3-1	NO RIGHT TURN	NEW MAST ARM - OVER HEAD; NEW SIGN PANEL (FACING NORTH)	24	24	4.0	4.0				
05+02.59	36.25'	RT	R6-2R	ONE WAY RIGHT	NEW SIGNAL POST; NEW SIGN PANEL (FACING SOUTH)	24	30	5.0	5.0				
			R6-2L	ONE WAY LEFT	NEW SIGNAL POST; NEW SIGN PANEL (FACING NORTH)	24	30	5.0	5.0				
05+08.00	42.53'	LT	R5-1	DO NOT ENTER	NEW STEEL SIGN SUPPORT IN GRASS; NEW SIGN PANEL (FACING EAST)	30	30	6.3	6.3			9.7	
05+58.00	40.81'	LT	R5-1	DO NOT ENTER	NEW STEEL SIGN SUPPORT IN GRASS; NEW SIGN PANEL (FACING EAST)	20	30	4.2	4.2			9.7	
50+70.00	26.34'	RT	W11-1A	SHARED LANE YIELD TO BIKES	NEW STEEL SIGN SUPPORT IN CONCRETE; NEW SIGN PANEL (FACING SOUTH)	30	30	6.3	6.3			9.7	1.0
08+46.00	26.50'	RT	M3-4	WEST	NEW STEEL SIGN SUPPORT IN CONCRETE; NEW SIGN PANELS (FACING SOUTH)	24	12	2.0	2.0			11.6	
			M1-1	INTERSTATE 290		24	24	4.0	4.0				
			M6-1L	LEFT ARROW		21	15	2.2	2.2				
10+56.00	29.87'	LT	W11-1A	SHARED LANE YIELD TO BIKES	NEW STEEL SIGN SUPPORT IN CONCRETE; NEW SIGN PANEL (FACING NORTH)	30	30	6.3	6.3			9.7	1.0
10+70.56	34.18'	LT	R6-2L	ONE WAY LEFT	NEW SIGNAL POST; NEW SIGN PANEL (FACING SOUTH)	24	30	5.0	5.0				
			R6-2R	ONE WAY RIGHT	NEW SIGNAL POST; NEW SIGN PANEL (FACING NORTH)	24	30	5.0	5.0				
10+73.57	35.67'	RT	R5-2	NO TRUCKS	NEW SIGNAL POST; NEW SIGN PANEL (FACING SOUTH)	24	24	4.0	4.0				
			R6-2L	ONE WAY LEFT	NEW SIGNAL POST; NEW SIGN PANEL (FACING SOUTH)	24	30	5.0	5.0				
			R6-2R	ONE WAY RIGHT	NEW SIGNAL POST; NEW SIGN PANEL (FACING NORTH)	24	30	5.0	5.0				
11+32.83	39.15'	RT	R5-2	NO TRUCKS	NEW SIGNAL POST; NEW SIGN PANEL (FACING SOUTH)	24	24	4.0	4.0				
	15.90'	RT	R3-1	NO RIGHT TURN	NEW MAST ARM - OVER HEAD; NEW SIGN PANEL (FACING SOUTH)	24	24	4.0	4.0				
12+19.93	27.20'	LT	M3-4	WEST	EX LIGHT POLE; NEW SIGN PANELS (FACING NORTH)	24	12	2.0	2.0				
			M1-1	INTERSTATE 290		24	24	4.0	4.0				
			M6-1R	RIGHT ARROW		21	15	2.2	2.2				
12+40.00	26.70'	LT	R3-7R	RIGHT TURN MUST TURN RIGHT	NEW STEEL SIGN SUPPORT IN CONCRETE; NEW SIGN PANEL (FACING NORTH)	30	30	6.3	6.3			9.7	1.0
13+62.00	33.68'	LT	R3-8	THROUGH AND RIGHT TURN	NEW STEEL SIGN SUPPORT IN CONCRETE; NEW SIGN PANEL (FACING NORTH)	30	30	6.3	6.3			9.7	1.0
CONGRESS PARKWAY													
250+76.86	23.29'	LT	R3-8	LEFT, THROUGH, AND RIGHT	NEW STEEL SIGN SUPPORT IN GRASS; NEW SIGN PANEL (FACING WEST)	48	30	10.0		10.0		9.7	
	22.74'	RT	R3-8	LEFT, THROUGH, AND RIGHT	NEW STEEL SIGN SUPPORT IN GRASS; NEW SIGN PANEL (FACING WEST)	48	30	10.0		10.0		9.7	
251+47.22	23.19'	LT	R5-1A	WRONG WAY	EX TELESCOPE ASSEMBLY TO REMAIN	24	24	4.0	TO REMAIN				
	23.77'	RT	R5-1A	WRONG WAY	EX TELESCOPE ASSEMBLY TO REMAIN	24	24	4.0	TO REMAIN				
VAN BUREN STREET													
112+36.63	23.31'	LT	R7-1-4	NO PARKING TOW ZONE	EX LIGHT POLE; NEW SIGN PANEL (FACING EAST)	18	18	2.3	2.3				
114+00.39	23.51'	LT	R3-8	SHARED LEFT / THROUGH, THROUGH, AND RIGHT	NEW STEEL SIGN SUPPORT IN CONCRETE; NEW SIGN PANEL (FACING EAST)	48	30	10.0		10.0		9.7	1.0
114+41.84	25.53'	LT	R7-1-4	NO PARKING TOW ZONE	EX LIGHT POLE; NEW SIGN PANEL (FACING EAST)	18	18	2.3	2.3				
I-290 (SEE NOTE)													
1062+22.00	33.76'	RT	CUSTOM	CHICAGO GATEWAY GREEN	CIRCULAR SHAPE; RED OUTLINE WITH ORANGE LEAF	60	60	25.0	RELOCATED UNDER "REMOVE AND RELOCATE SIGN PANEL ASSEMBLY - TYPE B"				
				CALL BEFORE YOU DIG: 811	WHITE BACKGROUND; BLACK TEXT	60	36	15.0					
1063+39.72	30.48'	RT	CUSTOM	SCOTT'S LAW NOTICE	YELLOW AND WHITE BACKGROUND; BLACK TEXT	120	48	40.0			38		
1063+90.89	27.12'	RT	D3-1	SACRAMENTO BLVD 3000 W.	GREEN BACKGROUND; WHITE TEXT	72	18	9.0	9.00		13.5		
1065+36.35	33.97'	LT	D3-1	SACRAMENTO BLVD 3000 W.	GREEN BACKGROUND; WHITE TEXT	72	18	9.0	9.00		13.5		
1065+80.00	25.00'	RT	D10-2a	MILE 27.0	GREEN BACKGROUND; WHITE TEXT	12	48	4.0	RELOCATED UNDER "REMOVE AND RELOCATE SIGN PANEL ASSEMBLY - TYPE A"				
1066+30.00	40.67'	LT	CUSTOM	CHICAGO POLICE DISTRICT HQ EXIT 26B	BLUE BACKGROUND; WHITE TEXT	120	48	40.0			38		

(NOTE) REFER TO I-290 PLAN AND DOUBLE PROFILE SHEET FOR PROPOSED SIGNING INFORMATION.

SCHEDULE TOTAL	139.2	30.0	103.0	98.9	5.0
SCHEDULE PAY	140	30	103	99	5

NOTE: 'INSTALL ROUND STEEL SIGN SUPPORT BASE' INCLUDED IN THE COST OF 'INSTALL ROUND STEEL SIGN SUPPORT'; ALL PROPOSED POSTS ARE TO BE INSTALLED VIA DRILLED METHOD.

MODEL: Default
FILE NAME: =\\PW01.hornershifrin.com\HS TDOT\Documents\23056000\PTB 195-007 D1 Paul-Sac PhII\SUiaCellnix\CAD\Sheets\D162K65_Sacramento\D162K65-sht-ctrhdul-02.dgn

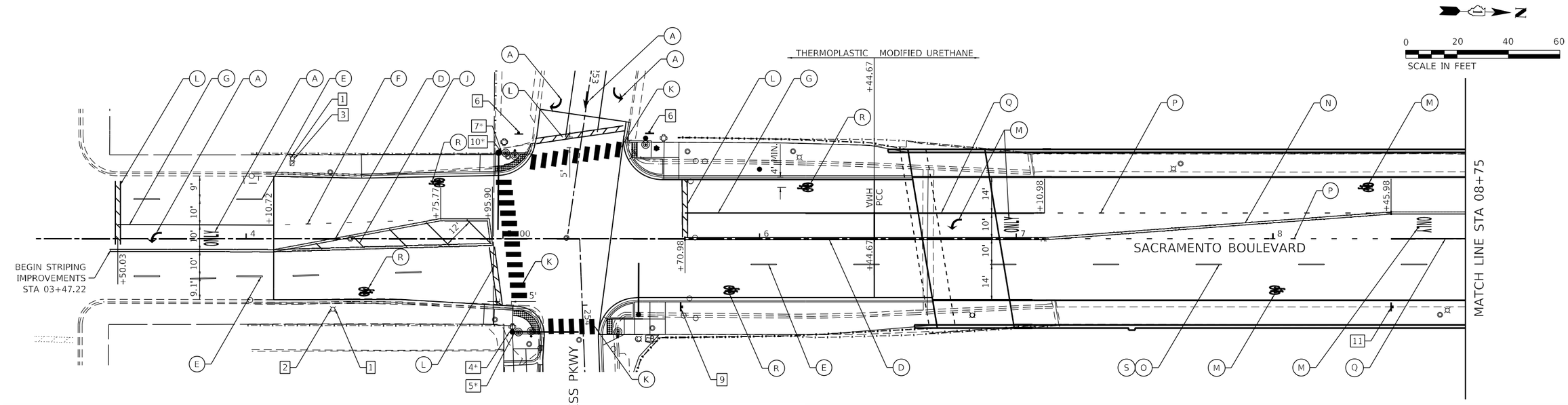

PAVEMENT MARKING LEGEND

- (A) THPL PVT MK LTR & SYM (WHITE)
- (B) THPL PVT MK LINE 4 (SOLID WHITE)
- (C) THPL PVT MK LINE 4 (SOLID YELLOW)
- (D) THPL PVT MK LINE 4 (DOUBLE YELLOW)
- (E) THPL PVT MK LINE 4 (WHITE; 18' SKIP, 6' DASH)
- (F) THPL PVT MK LINE 6 (WHITE; 6' SKIP, 2' DASH)
- (G) THPL PVT MK LINE 6 (SOLID WHITE)
- (H) THPL PVT MK LINE 8 (SOLID WHITE)
- (I) THPL PVT MK LINE 12 (SOLID WHITE, 45°)
- (J) THPL PVT MK LINE 12 (SOLID YELLOW, 45°)
- (K) THPL PVT MK LINE 24 (WHITE CROSSWALK)
- (L) THPL PVT MK LINE 24 (SOLID WHITE)
- (M) MOD URETH PM LTR-SYM (WHITE)
- (N) MOD URETH PM LINE 4 (DOUBLE YELLOW) 8" C-C
- (O) PREF PL PM TD STD LINE 7 (1.5" BLACK, 4" WHITE, 1.5" BLACK; 18' SKIP, 6' DASH)
- (P) MOD URETH PM LINE 6 (WHITE; 6' SKIP, 2' DASH)
- (Q) MOD URETH PM LINE 6 (SOLID WHITE)
- (R) PREF THPL PM LTR-SYM (WHITE)
- (S) GRV RCSD PVT MRKG 8

SIGNING LEGEND

1	2	3	4	5	6	7	8	9	10	11	12
R7-1-4	M2-1, M1-1	SPECIAL (TO REMAIN)	R6-2R	R6-2L	R5-1	S4-1-100	R3-8	W11-1A	R3-1	M3-4, M1-1, M6-1L	R5-2

13	14	15	16	17
R3-8	R3-8	M3-4, M1-1, M6-1R	R3-7R	R5-1A

* MOUNTED ON TRAFFIC SIGNAL POST

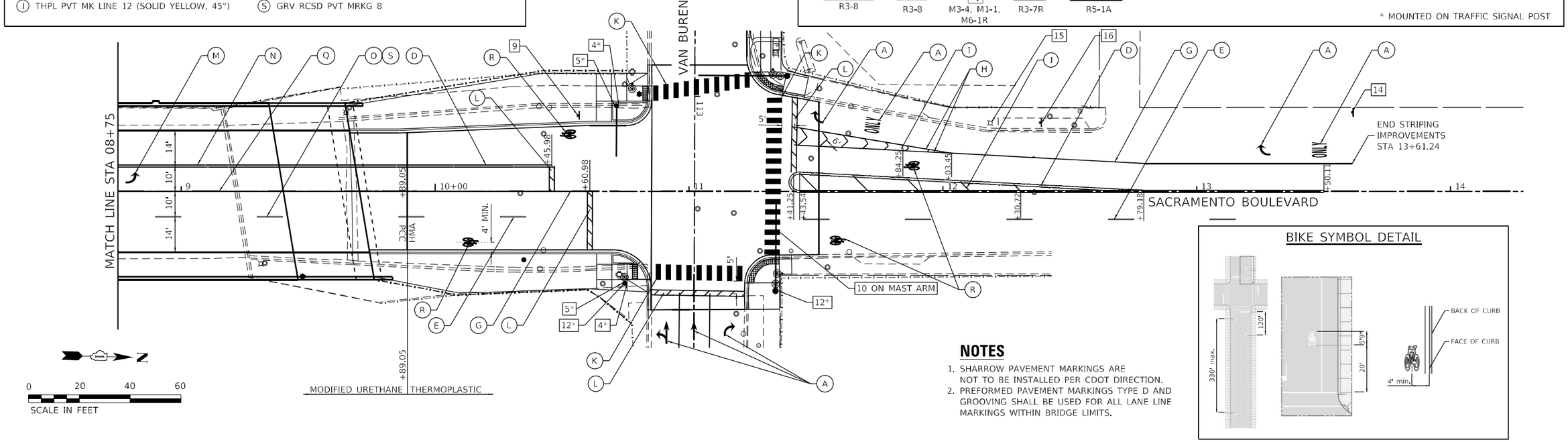

NOTES

1. SHARROW PAVEMENT MARKINGS ARE NOT TO BE INSTALLED PER CDOT DIRECTION.
2. PREFORMED PAVEMENT MARKINGS TYPE D AND GROOVING SHALL BE USED FOR ALL LANE LINE MARKINGS WITHIN BRIDGE LIMITS.

BIKE SYMBOL DETAIL

MODEL: Default
FILE NAME: pw:\\PW01.hornershifrin.com:HS IDOT\Documents\230560000-PTB195-007_D1_Paul-Sac_PhII_SubCollins\CAD_Sheets\D162K65_Sacramento\D162K65-sht-pmk-01.dgn

HORNER SHIFRIN WWW.HORNERSHIFRIN.COM	USER NAME = krkubalanza	DESIGNED -	REVISED -
		DRAWN -	REVISED -
	PLOT SCALE = 40.0000 ' / in.	CHECKED -	REVISED -
	PLOT DATE = 11/20/2025	DATE -	REVISED -

STATE OF ILLINOIS
DEPARTMENT OF TRANSPORTATION

SACRAMENTO BOULEVARD OVER FAI-290 (EISENHOWER EXPRESSWAY)
PAVEMENT MARKING AND SIGNING PLAN

SCALE: 1" = 20' | SHEET 1 OF 3 SHEETS | STA. TO STA.

F.A.I. RTE.	SECTION	COUNTY	TOTAL SHEETS	SHEET NO.
290	2019-192-B-R	COOK	237	92
		CONTRACT NO. 62K65		
		ILLINOIS FED. AID PROJECT		

N

0 20 40 60

SCALE IN FEET

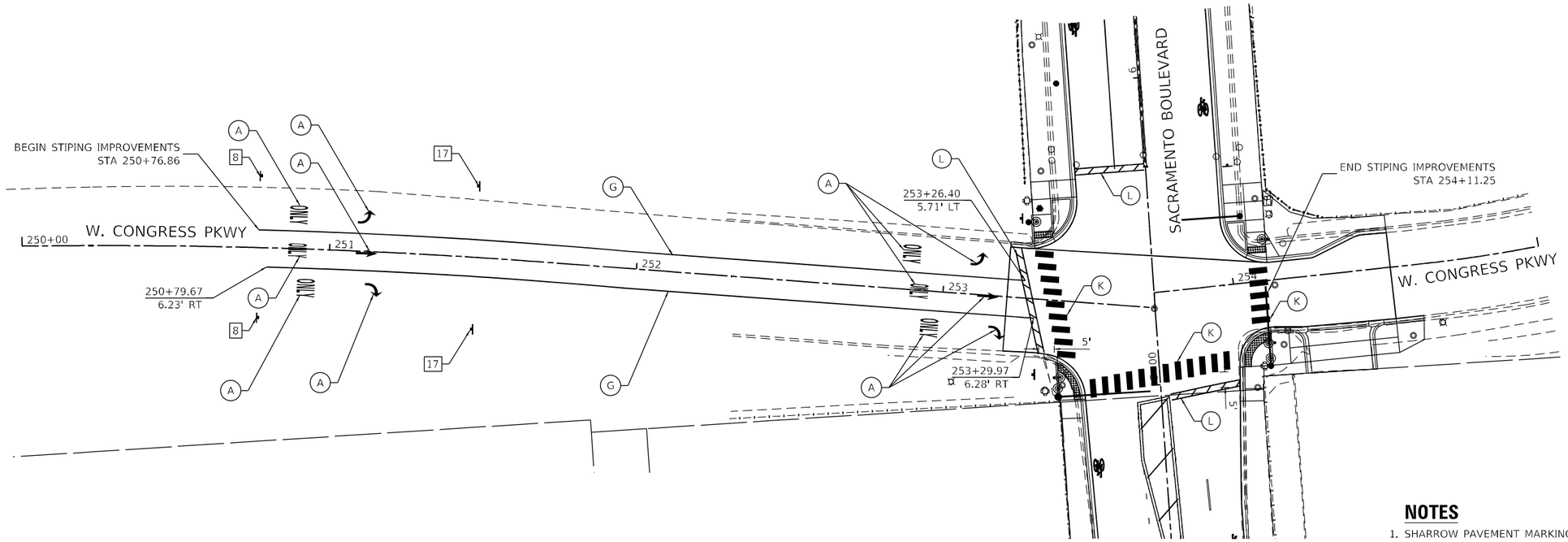

NOTES

1. SHARROW PAVEMENT MARKINGS ARE NOT TO BE INSTALLED PER CDOT DIRECTION.
2. PREFORMED PAVEMENT MARKINGS TYPE D AND GROOVING SHALL BE USED FOR ALL LANE LINE MARKINGS WITHIN BRIDGE LIMITS.

SIGNING LEGEND

1	2	3	4	5	6	7	8	9	10	11	12
R7-1-4	M2-1, M1-1	SPECIAL	R6-2R	R6-2L	R5-1	S4-1-100	R3-8	W11-1A	R3-1	M3-4, M1-1, M6-1L	R5-2
13	14	15	16	17							
R3-8	R3-8	M3-4, M1-1, M6-1R	R3-7R	R5-1A							

PAVEMENT MARKING LEGEND

- (A) THPL PVT MK LTR & SYM (WHITE)
- (B) THPL PVT MK LINE 4 (SOLID WHITE)
- (C) THPL PVT MK LINE 4 (SOLID YELLOW)
- (D) THPL PVT MK LINE 4 (DOUBLE YELLOW)
- (E) THPL PVT MK LINE 4 (WHITE; 18' SKIP, 6' DASH)
- (F) THPL PVT MK LINE 6 (WHITE; 6' SKIP, 2' DASH)
- (G) THPL PVT MK LINE 6 (SOLID WHITE)
- (H) THPL PVT MK LINE 8 (SOLID WHITE)
- (I) THPL PVT MK LINE 12 (SOLID WHITE, 45°)
- (J) THPL PVT MK LINE 12 (SOLID YELLOW, 45°)
- (K) THPL PVT MK LINE 24 (WHITE CROSSWALK)
- (L) THPL PVT MK LINE 24 (SOLID WHITE)
- (M) MOD URETH PM LTR-SYM (WHITE)
- (N) MOD URETH PM LINE 4 (DOUBLE YELLOW) 8" C-C
- (O) PREF PL PM TD STD LINE 7 (1.5" BLACK, 4" WHITE, 1.5" BLACK; 18' SKIP, 6' DASH)
- (P) MOD URETH PM LINE 6 (WHITE; 6' SKIP, 2' DASH)
- (Q) MOD URETH PM LINE 6 (SOLID WHITE)
- (R) PREF THPL PM LTR-SYM (WHITE)
- (S) GRV RCSD PVT MRKG 8

MODEL: Default
FILE NAME: pw:\\PW01.hornershifrin.com:HS IDOT Documents\230560000-PTB195-007 DJ Pz,dSsc PhE SusCollins\CAD Sheets\D162K65_SacramentoD162K65_sht_sgm%02.dgn

HORNER SHIFRIN
WWW. HORNERSHIFRIN .COM

USER NAME = krkubalanza	DESIGNED -	REVISED -
	DRAWN -	REVISED -
PLOT SCALE = 40.0000 ' / in.	CHECKED -	REVISED -
PLOT DATE = 11/20/2025	DATE -	REVISED -

STATE OF ILLINOIS
DEPARTMENT OF TRANSPORTATION

SACRAMENTO BOULEVARD OVER FAI–290 (EISENHOWER EXPRESSWAY)
PAVEMENT MARKING AND SIGNING PLAN

SCALE: 1" = 20' | SHEET 2 OF 3 SHEETS | STA. | TO STA.

F.A.I. RTE.	SECTION	COUNTY	TOTAL SHEETS	SHEET NO.
290	2019-192-B-R	COOK	237	93
		CONTRACT NO. 62K65		
	ILLINOIS	FED. AID PROJECT		

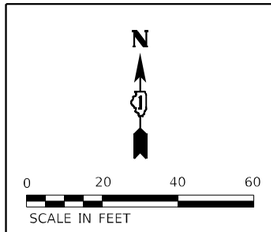

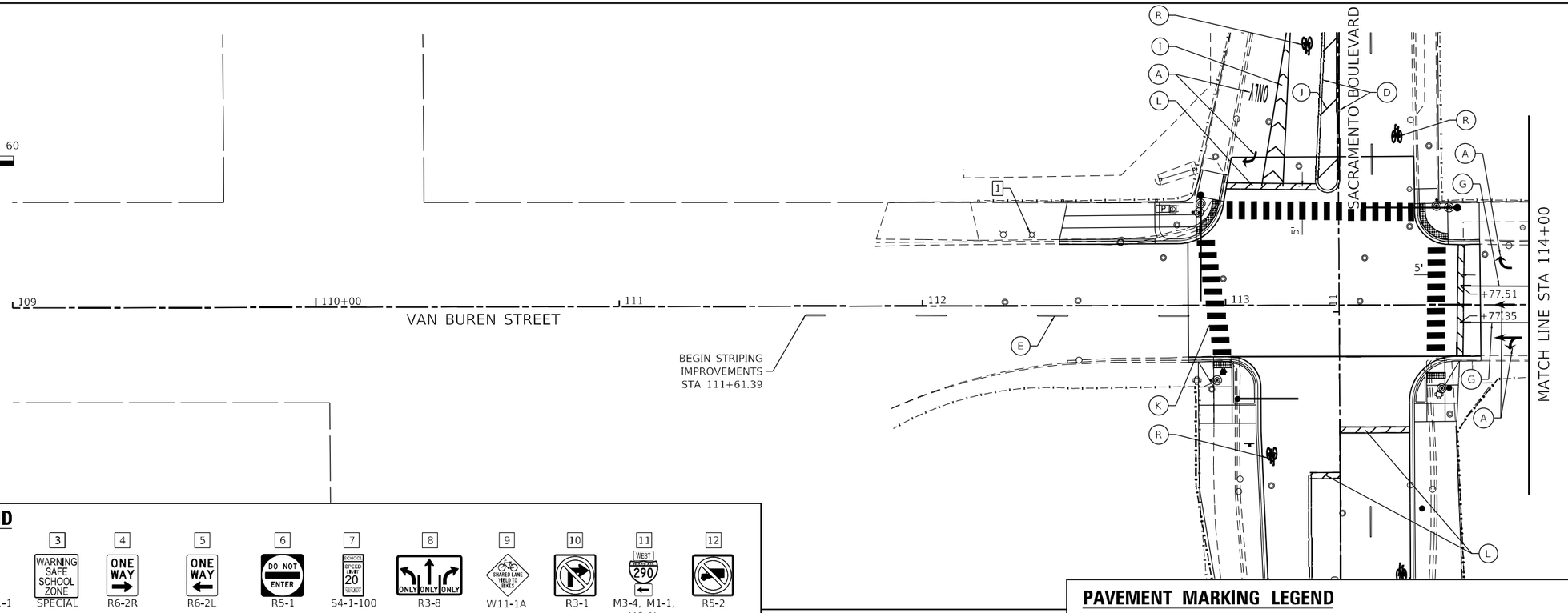

SIGNING LEGEND

1	2	3	4	5	6	7	8	9	10	11	12
R7-1-4	M2-1, M1-1	SPECIAL	R6-2R	R6-2L	R5-1	S4-1-100	R3-8	W11-1A	R3-1	M3-4, M1-1, M6-1L	R5-2
13	14	15	16	17							
R3-8	R3-8	M3-4, M1-1, M6-1R	R3-7R	R5-1A							

PAVEMENT MARKING LEGEND

- (A) THPL PVT MK LTR & SYM (WHITE)
- (B) THPL PVT MK LINE 4 (SOLID WHITE)
- (C) THPL PVT MK LINE 4 (SOLID YELLOW)
- (D) THPL PVT MK LINE 4 (DOUBLE YELLOW)
- (E) THPL PVT MK LINE 4 (WHITE; 18' SKIP, 6' DASH)
- (F) THPL PVT MK LINE 6 (WHITE; 6' SKIP, 2' DASH)
- (G) THPL PVT MK LINE 6 (SOLID WHITE)
- (H) THPL PVT MK LINE 8 (SOLID WHITE)
- (I) THPL PVT MK LINE 12 (SOLID WHITE, 45°)
- (J) THPL PVT MK LINE 12 (SOLID YELLOW, 45°)
- (K) THPL PVT MK LINE 24 (WHITE CROSSWALK)
- (L) THPL PVT MK LINE 24 (SOLID WHITE)
- (M) MOD URETH PM LTR-SYM (WHITE)
- (N) MOD URETH PM LINE 4 (DOUBLE YELLOW) 8" C-C
- (O) PREF PL PM TD STD LINE 7 (1.5" BLACK, 4" WHITE, 1.5" BLACK; 18' SKIP, 6' DASH)
- (P) MOD URETH PM LINE 6 (WHITE; 6' SKIP, 2' DASH)
- (Q) MOD URETH PM LINE 6 (SOLID WHITE)
- (R) PREF THPL PM LTR-SYM (WHITE)
- (S) GRV RCSD PVT MRKG 8

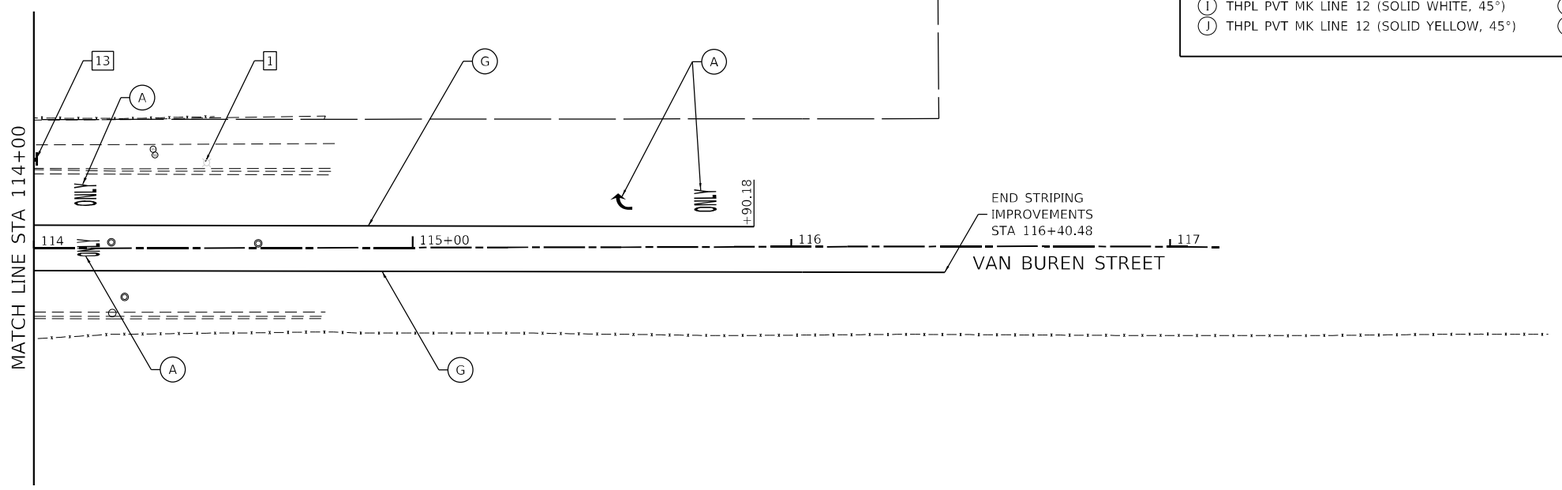

NOTES

1. SHARROW PAVEMENT MARKINGS ARE NOT TO BE INSTALLED PER CDOT DIRECTION.
2. PREFORMED PAVEMENT MARKINGS TYPE D AND GROOVING SHALL BE USED FOR ALL LANE LINE MARKINGS WITHIN BRIDGE LIMITS.

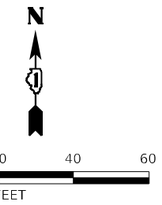

MODEL: Default
FILE NAME: pw:\\PW01.hornershifrin.com:HS DOT\Documents\2305600\0-PTB 195-007 D1 Pro\Sac_Phtl_SuicCollins\C4D Sheets\D162K65_SacramentoD162K65_sht-pmk-c3.dgn

HORNER SHIFRIN
WWW. HORNERSHIFRIN .COM

USER NAME = krkubalanza	DESIGNED -	REVISED -	
	DRAWN -	REVISED -	
PLOT SCALE = 40.0000 ' / in.	CHECKED -	REVISED -	
PLOT DATE = 11/20/2025	DATE -	REVISED -	

STATE OF ILLINOIS
DEPARTMENT OF TRANSPORTATION

SACRAMENTO BOULEVARD OVER FAI–290 (EISENHOWER EXPRESSWAY)
PAVEMENT MARKING AND SIGNING PLAN

SCALE: 1" = 20' | SHEET 3 OF 3 SHEETS | STA. | TO STA.

F.A.I. RTE.	SECTION	COUNTY	TOTAL SHEETS	SHEET NO.
290	2019-192-B-R	COOK	237	94
		CONTRACT NO. 62K65		
	ILLINOIS	FED. AID PROJECT		

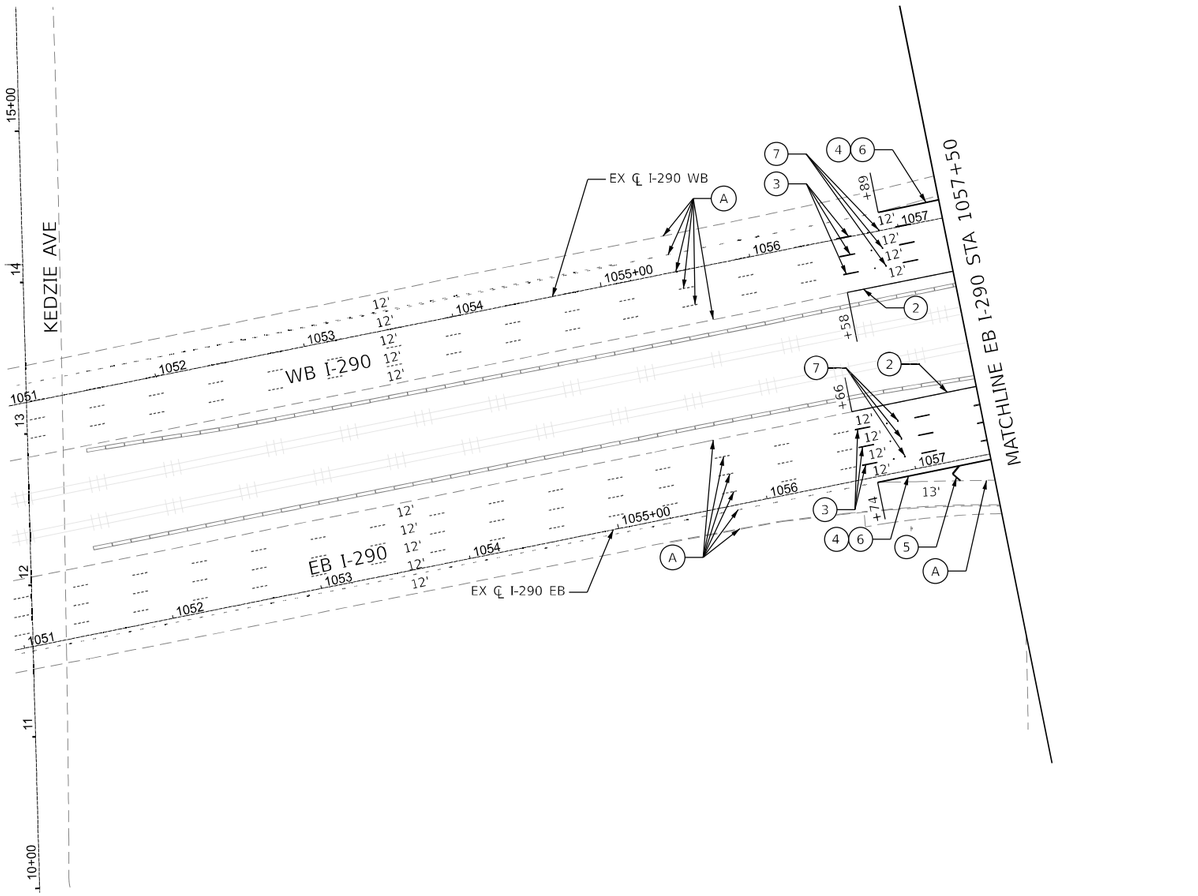

LEGEND

1. THERMOPLASTIC PAVEMENT MARKING - LINE 4" (SOLID WHITE)
2. THERMOPLASTIC PAVEMENT MARKING - LINE 4" (SOLID YELLOW)
3. THERMOPLASTIC PAVEMENT MARKING - LINE 5" (10' DASH - 30' SKIP WHITE)
4. THERMOPLASTIC PAVEMENT MARKING - LINE 8" (SOLID WHITE)
5. THERMOPLASTIC PAVEMENT MARKING - LINE 12" (SOLID WHITE)
6. SHOULDER RUMBLE STRIP, 16 INCH
7. RAISED REFLECTIVE PAVEMENT MARKER, REFLECTOR REPLACEMENT (SEE NOTE 1)

A. EXISTING PAVEMENT MARKING

NOTES

1. REFLECTORS IN CONFLICT WITH TEMPORARY LANE USAGE SHALL BE REMOVED DURING STAGING OPERATIONS. THE BASE CASTING SHALL REMAIN IN PLACE. REFLECTORS TO BE REINSTALLED INTO THE RAISED PAVEMENT MARKER CASTINGS UPON COMPLETION OF STAGING.

FILE NAME = P:\10-IL11411-DOT - Sacramento and Paulina over I-290\Work\CADD\Sacramento - Contract 62K65\CADD_Sheets\D162K65-sht-pmk-02.dgn

COLLINS ENGINEERS INC.

USER NAME = omartinez	DESIGNED - OM	REVISED -	
	DRAWN - OM	REVISED -	
PLOT SCALE = $SCALE$	CHECKED - RG	REVISED -	
PLOT DATE = 10/16/2025	DATE - 09/12/2025	REVISED -	

STATE OF ILLINOIS
DEPARTMENT OF TRANSPORTATION

FAI–290 (EISENHOWER EXPRESSWAY) AT SACRAMENTO BOULEVARD
PAVEMENT MARKING PLAN

SCALE: 1" = 50" | SHEET NO. 1 OF 3 SHEETS | STA. | TO STA.

F.A.I. RTE.	SECTION	COUNTY	TOTAL SHEETS	SHEET NO.
290	2019-192-B-R	COOK	237	95
		CONTRACT NO. 62K65		
FED. ROAD DIST. NO.	ILLINOIS	FED. AID PROJECT		

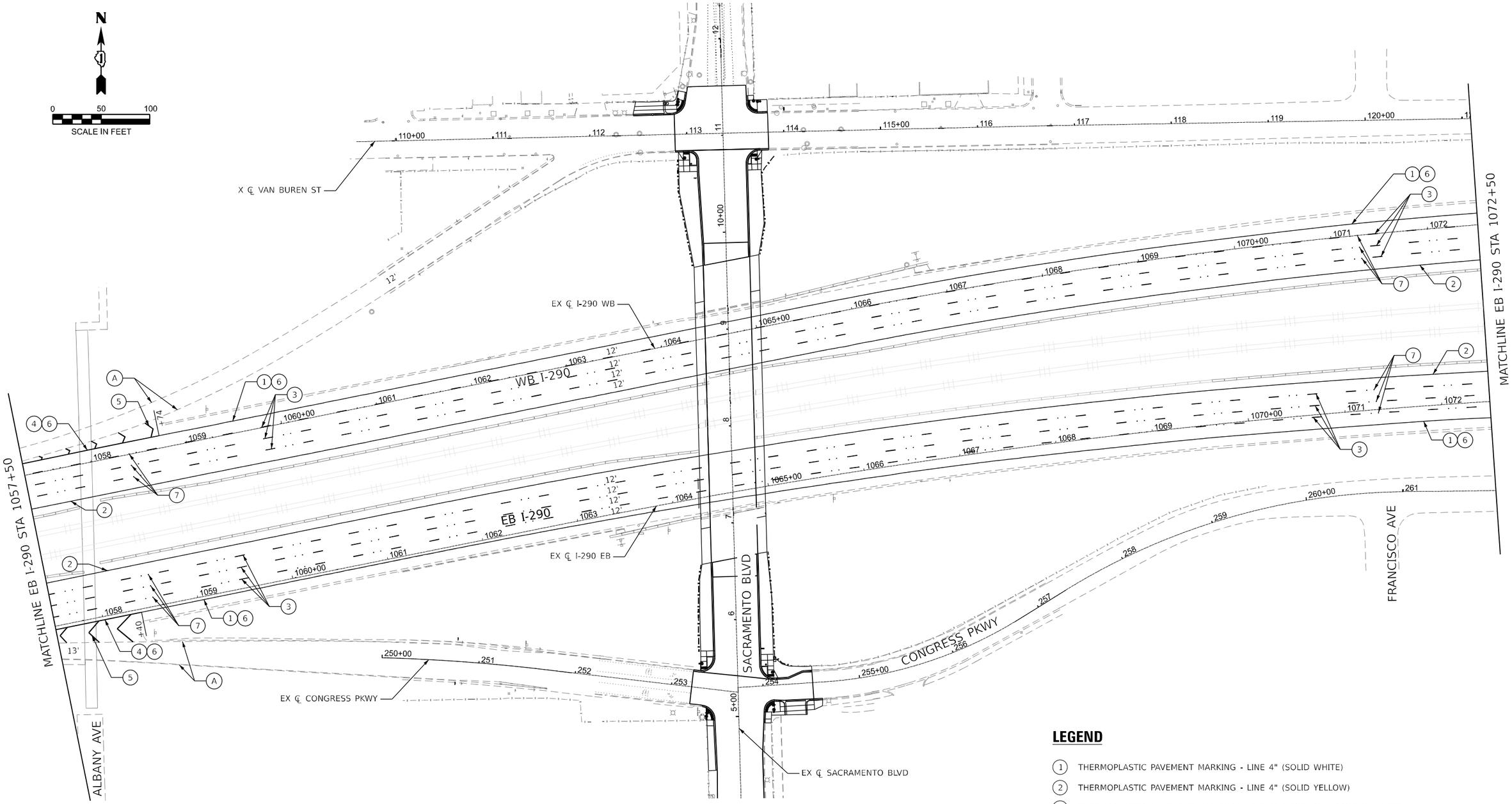

NOTES

1. REFLECTORS IN CONFLICT WITH TEMPORARY LANE USAGE SHALL BE REMOVED DURING STAGING OPERATIONS. THE BASE CASTING SHALL REMAIN IN PLACE. REFLECTORS TO BE REINSTALLED INTO THE RAISED PAVEMENT MARKER CASTINGS UPON COMPLETION OF STAGING.

LEGEND

- (1) THERMOPLASTIC PAVEMENT MARKING - LINE 4" (SOLID WHITE)
- (2) THERMOPLASTIC PAVEMENT MARKING - LINE 4" (SOLID YELLOW)
- (3) THERMOPLASTIC PAVEMENT MARKING - LINE 5" (10' DASH - 30' SKIP WHITE)
- (4) THERMOPLASTIC PAVEMENT MARKING - LINE 8" (SOLID WHITE)
- (5) THERMOPLASTIC PAVEMENT MARKING - LINE 12" (SOLID WHITE)
- (6) SHOULDER RUMBLE STRIP, 16 INCH
- (7) RAISED REFLECTIVE PAVEMENT MARKER, REFLECTOR REPLACEMENT (SEE NOTE 1)
- (A) EXISTING PAVEMENT MARKING

COLLINS ENGINEERS INC

USER NAME = omartinez	DESIGNED - OM	REVISED -
	DRAWN - OM	REVISED -
PLOT SCALE = $SCALE$	CHECKED - RG	REVISED -
PLOT DATE = 10/16/2025	DATE - 09/12/2025	REVISED -

STATE OF ILLINOIS
DEPARTMENT OF TRANSPORTATION

FAI–290 (EISENHOWER EXPRESSWAY) AT SACRAMENTO BOULEVARD
PAVEMENT MARKING PLAN

SCALE: 1' = 50" | SHEET NO. 2 OF 3 SHEETS | STA. | TO STA.

F.A.I. RTE.	SECTION	COUNTY	TOTAL SHEETS	SHEET NO.
290	2019-192-B-R	COOK	237	96
		CONTRACT NO. 62K65		
FED. ROAD DIST. NO.	ILLINOIS	FED. AID PROJECT		

FILE NAME = P:\10-IL14411-IDOT - Sacramento and Paulina over I-290\Work\CADD\Sacramento - Contract 62K65\CADD_Sheets\D162K65-sht-tpmk-02.dgn

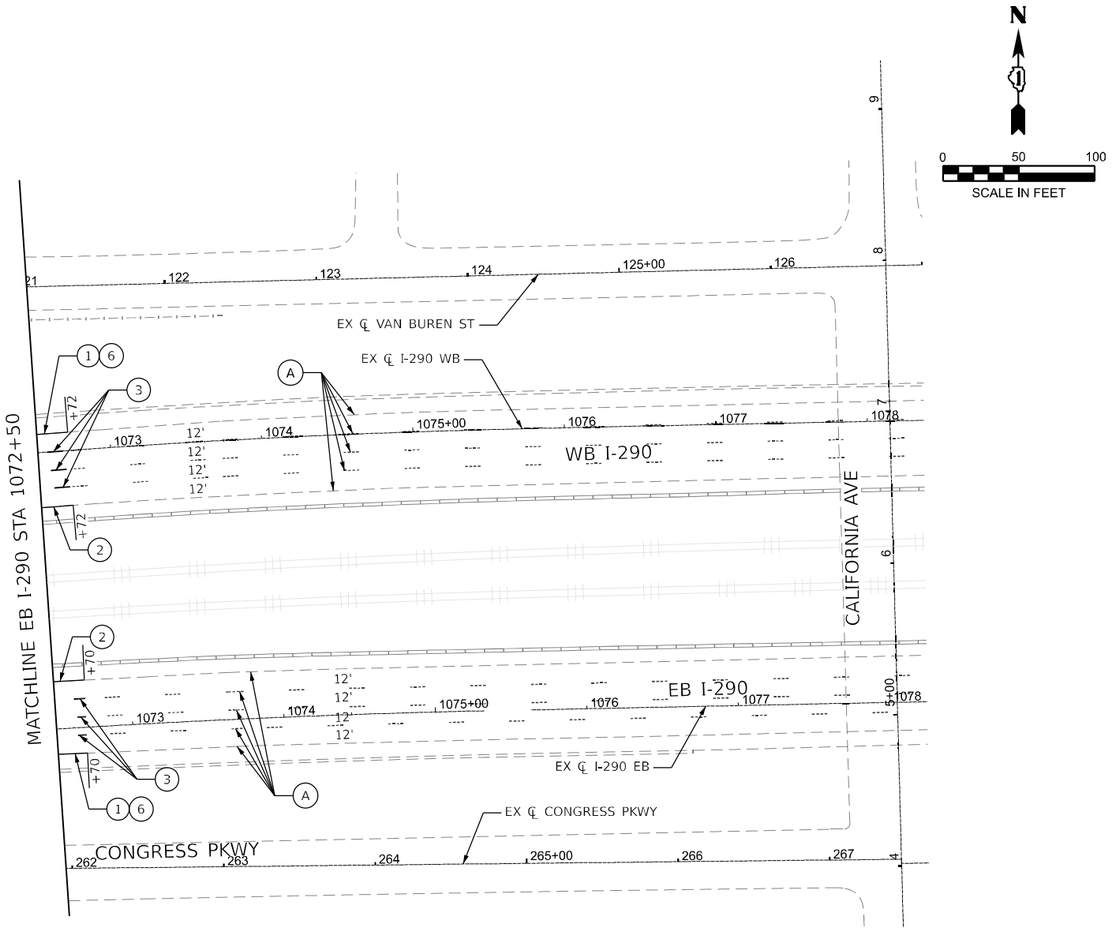

NOTES

1. REFLECTORS IN CONFLICT WITH TEMPORARY LANE USAGE SHALL BE REMOVED DURING STAGING OPERATIONS. THE BASE CASTING SHALL REMAIN IN PLACE. REFLECTORS TO BE REINSTALLED INTO THE RAISED PAVEMENT MARKER CASTINGS UPON COMPLETION OF STAGING.

LEGEND

(1) THERMOPLASTIC PAVEMENT MARKING - LINE 4" (SOLID WHITE)
(2) THERMOPLASTIC PAVEMENT MARKING - LINE 4" (SOLID YELLOW)
(3) THERMOPLASTIC PAVEMENT MARKING - LINE 5" (10' DASH - 30' SKIP WHITE)
(4) THERMOPLASTIC PAVEMENT MARKING - LINE 8" (SOLID WHITE)
(5) THERMOPLASTIC PAVEMENT MARKING - LINE 12" (SOLID WHITE)
(6) SHOULDER RUMBLE STRIP, 16 INCH
(7) RAISED REFLECTIVE PAVEMENT MARKER, REFLECTOR REPLACEMENT (SEE NOTE 1)
(A) EXISTING PAVEMENT MARKING

FILE NAME = P:\10-IL\14111-IDOT - Sacramento and Paulina over I-290\Work\CAD\DSacramento - Contract 62K65\CAD\D_Sheets\D162K65-sht-pmk-02.dgn

COLLINS ENGINEERS INC.

USER NAME = omartinez	DESIGNED - OM	REVISED -
	DRAWN - OM	REVISED -
PLOT SCALE = $SCALE$	CHECKED - RG	REVISED -
PLOT DATE = 10/16/2025	DATE - 09/12/2025	REVISED -

STATE OF ILLINOIS
DEPARTMENT OF TRANSPORTATION

FAI–290 (EISENHOWER EXPRESSWAY) AT SACRAMENTO BOULEVARD
PAVEMENT MARKING PLAN

SCALE: 1" = 50' | SHEET NO. 3 OF 3 SHEETS | STA. | TO STA.

F.A.I. RTE.	SECTION	COUNTY	TOTAL SHEETS	SHEET NO.
290	2019-192-B-R	COOK	237	97
		CONTRACT NO. 62K65		
FED. ROAD DIST. NO.	ILLINOIS	FED. AID PROJECT		

PROPOSED	PRESENT	
		SIGNAL, TRAFFIC 3 SECTION 1-WAY ADJUSTABLE, 12" OR AS NOTED
		SIGNAL, TRAFFIC 3 SECTION 2-WAY ADJUSTABLE, 12" OR AS NOTED
		SIGNAL OPTICALLY PROGRAMMED
DON'T WALK	DON'T WALK	SIGNAL, PEDESTRIAN, DON'T WALK/WALK
		SIGNAL FACE ARROW, 12" COLOR AS NOTED
	Y G	SIGNAL FACE, 1 SECTION YELLOW/GREEN ARROW DUAL INDICATION
		PUSH BUTTON, PEDESTRIAN
NAME		SIGN, ILLUMINATED, WITH MESSAGE OR SYMBOL AS INDICATED
		MAST ARM, MONOTUBE, STEEL. SIZE AS INDICATED (SEE DWG. #870)
		MAST ARM, TRUSS, ALUMINUM. SIZE AS INDICATED
		CONTROLLER, TRAFFIC SIGNAL. PEDESTAL OR BASE MOUNTED AS INDICATED
		CONTROLLER, STREET LIGHTING. PEDESTAL OR BASE MOUNTED. (DWG. 876 or 880)
		CONTROLLER, STREET LIGHTING. POLE MOUNTED (DWG. #11940)
		POLE, WOOD. COMMONWEALTH EDISON COMPANY, SERVICE
		POLE, CITY STEEL, ANCHOR BASE, 34'6",7 GA. 10" DI A. AND 15"B.C. 24"X7' FND. W/1 1/4" ANCHOR RODS DRG. #818.
		POLE, CITY STEEL, ANCHOR BASE, 34'-6", 3 GA. 10" DIA. AND 15" B.C. 24"X9' FND. W/1 1/4" ANCHOR RODS DRG. #818 (16',20'or 26'M.A.)
		POLE, CITY STEEL, ANCHOR BASE, 34"-6", 3GA., 11" DIA. AND 17 1/4" B.C. 30"X9' FND. W/1 1/4" ANCHOR RODS DRG. #816. (30' M.A.)
		POLE, CITY STEEL, ANCHOR BASE 34'-6", 3 GA. 12 1/2" DIA. AND 16 1/2"B.C. 30"X11' FND. W/1 1/2" ANCHOR RODS DRG.#317. (35',40'or 44' M.A.)
		POLE, CITY STEEL, ANCHOR BASE, 32'-6", 3 GA. 10" DIA., WITH 3 GA. BAL. HSG. BASE AND 17 1/4" B. C. ON 30"X9' FND. W/ 11/4" ANCHOR RODS DRG. #816.
		POLE, CITY STEEL, ANCHOR BASE, 20',27'-6",29'-6", 7 GA. WITH STEEL BAL. HSG. BASE AND FND. W/10" D. B.C. AND 1" ANCHOR RODS DRG. #716.
		POLE,CITY STEEL, ANCHOR BASE, 20',27'-6",29'-6", 3 GA., WITH STEEL BAL. HSG. BASE AND FND. W/10" D. B.C. AND 1" ANCHOR RODS DWG.#719.
		POLE, CITY STEEL, ANCHOR BASE, 20',27'-6",29'-6" 7 GA., AND FND. WITH 10" B.C. AND 1" ANCHOR RODS DWG. #11408B.
		POLE, CITY STEEL, ANCHOR BASE, 20',27'-6",29'-6" 3 GA.,AND FND. WITH 10" B.C. AND 1" ANCHOR RODS DWG. #11408B.
		POLE , CITY STEEL, ANCHOR BASE, 32'-6", 7 GA., AND FND. WITH 11 1/2" B.C. AND 1" ANCHOR RODS DWG. #753.
		POLE, CITY STEEL, ANCHR BASE, 32'-6", 3 GA., AND FND. WITH 11 1/2" B.C. AND 1" ANCHOR RODS DWG. #753.
		POLE, CITY STEEL, ANCHOR BASE, 32'-6" 7 GA., ALUM. BHB AND FND. WITH 15" B.C.-24"X7' WITH 1" ANCHOR RODS DRG. #691.
		POLE, CITY STEEL, ANCHOR BASE, 32'-6", 3 GA., ALUM. BHB AND FND. WITH 15" B.C. 24"X 7' WITH 1" ANCHOR RODS DWG. #691.
		POLE, CITY ALUMINUM, WITH ROUND BAL. HSG. BASE, 25', 28', or 30' ON FND.WITH 14" B.C., ACQUIRED FROM CHICAGO PARK DISTRICT.
		POLE, CITY STEEL, EMBEDDED, 4"X 9"X 35' 7 GA., TAPERED TUBULAR. (DWG. #658)
		POLE, CITY STEEL, EMBEDDED, 4"X 9"X 35' 3 GA., TAPERED TUBULAR. (DWG. #658)
		POLE, CITY STEEL, EMBEDDED. (ACQUIRED FROM CTA)
		COLUMN,ELEVATED STRUCTURE
		POLE, WOOD. (SIZE AS NOTED)
		POLE, FOUNDATION WITH ELBOWS AS INDICATED.(SIZE AS NOTED)
		POLE, ORNAMENTAL OR OTHER, AS INDICATED ON THE PLANS

PROPOSED	PRESENT	
		HANDHOLE, HEAVY DUTY, 36" I.D. (DWG.#866)
		HANDHOLE, CIRCULAR WITH 24"FRAME & COVER,30"I.D. (#867)
		MANHOLE, CITY 3'X4'X4' DWG. #729 or 730; 4'X6'X6' DWG. #732or 733.
		FOUNDATION, CONTROLLER OR PEDESTAL, 13" B.C.,20"X5' (DWG. #709)
		FOUNDATION, TRAFFIC CONTROLLER DWG. #854. F.A. TERMINAL FND. DWG. #11972
P	P	FOUNDATION, TRAFFIC TYPE "P", BASE MOUNT. (DWG. #888)
		FOUNDATION.CONTROLLER STREET LIGHT .SPECIAL. 100A & 200A. (DWG.#876 & # 880)
		FOUNDATION, TRANSCLOSURE; TRANSCLOSURE HOUSING. (DWG.# 583 & #891)
		CONTROLLER,UNDERPASS LIGHTING 120V. & 240V. (DWG. #860 & #861)
E		MANHOLE, UTILITY, E=COMMONWEALTH EDISON; T=ILL.BELL TEL.; G=PEOPLES GAS; W=CITY WATER; P=CHGO PARK DISTRICT; CTA=C.T.A; S= SEWER
J		JUNCTION BOX, IN PAVEMENT (DWG. #815)
		DETECTOR LOOP IN PAVEMENT
		CONDUIT or P.V.C., NUMBER,SIZE & TYPE. (AS NOTED)
2D	2D	CONDUIT or P.V.C. ENCASED IN CONCRETE. (SECTION or NUMBER OF CONDUIT INDICATED
		LUMINAIRE, H.P.S.V. 400W LAMP, 240V, SEMI-CUTOFF
		LUMINAIRE, H.P.S.V. 400W LAMP, 240V, CUTOFF
		LUMINAIRE, H.P.S.V. 310W LAMP, 240V
		LUMINAIRE, H.P.S.V. 310W LAMP 240V, CUTOFF
		LUMINAIRE, H.P.S.V. 150W LAMP, 240V
		LUMINAIRE, H.P.S.V. 150W LAMP, 120V
		LUMINAIRE, H.P.S.V. 250W LAMP, 120V, (ALLEY LIGHT)
		LUMINAIRE, H.P.S.V. 250W LAMP, 120V
T	T	TERMINAL, CABINET F.A. & P.C.
F	F	FIRE ALARM BOX, MOUNTED
F	F	FIRE ALARM BOX, POLE MOUNTED
PR	PR	CABLE, TRAFFIC SIGNAL, COMMUNICATION, 1-PAIR #14 SHIELDED, IN CONDUIT
2	2	CABLE, TRAFFIC SIGNAL POWER SUPPLY, 2/C- #4, 600 V. EPR. IN CONDUIT
III	III	CABLE, TRAFFIC SIGNAL POWER SUPPLY, 2 1/C-#2 or #1/0 600V. EPR IN CONDUIT
II	II	CABLE, TRAFFIC SIGNAL POWER SUPPLY, 2/C-#10 or #6, 600V NSRI, IN CONDUIT
VII	VII	CABLE, TRAFFIC SIGNAL, 7/C-#12 or #14, 600V, EPR IN CONDUIT
X	X	CABLE, TRAFFIC SIGNAL, 10/C-#12 600V. EPR IN CONDUIT
	XIV	CABLE, TRAFFIC SIGNAL, 14/C-#14, 600V. EPR IN CONDUIT
XIX	XIX	CABLE, TRAFFIC SIGNAL, 19/C-#12 600V, EPR IN CONDUIT
2N	2N	CABLE, STREET LIGHT, 2 1/C-#6, 600V. RINS IN PARKWAY
2NC	2NC	CABLE, STREET LIGHT, 2 1/C-#6, 600V. RINS IN CONDUIT
3TC	3TC	CABLE, STREET LIGHT, 2 1/C-#6 EPRN 600V. & 1 1/C-#8 GREEN, TRIPLEXED.IN CONDUIT
3NC	3NC	CABLE, STREET LIGHT, 3 1/C-#1/0, or #2/0, or #4, 600V. EPR IN CONDUIT
2W	2W	WIRE, STREET LIGHT, 2 1/C-#6, HDNS. AERIAL
3W	3W	WIRE, STREET LIGHT, 2 1/C-#6 & 1 1/C #8, HDNS. AERIAL
III	III	CABLE, STREET LIGHT AERIAL, 3 1/C-#4 or #2 SELF SUPPORTING, 600V EPR
W FA	W FA	WIRE, F.A. & P.C. AERIAL, 1/C-#10, NUMERAL DENOTES QUANTITY
PR	PR	CABLE, F.A. & P.C. AERIAL, W/ MESSENGER #19-(NUMBER OF PAIRS AS INDICATED)
PR 6 6	6 PR	CABLE, F.A. & P.C. AERIAL, SELF SUPPORTING, #19-(NUMBER OF PAIRS AS INDICATED)
37 PR	37 PR	CABLE, F.A. & P.C., IN CONDUIT, #19-(NUMBER OF PAIRS AS INDICATED)
		DOWNLIGHT ASSEMBLY. (DWG. #850)
		LIGHT, TRAFFIC SAFETY ISLAND
		FLASHING BEACON & DOWNLIGHT

ORNAMENTAL LUMINAIRES

PROPOSED	EXISTING		
		310W PENDANT	(240V)
		400W PENDANT	(240V)
		250W PENDANT	(240V)
		150W ACORN	(120V)
		150W ACORN	(240V)
		50W ACORN	(240V)
		100W ACORN	(240V)
		150W GLOBE	(240V)
		100W GLOBE	(240V)
		50W GLOBE	(240V)

C	04-01-02	REVISED/REDRAW R.POOL/B.I.
B	12-4-01	ADDED ORNAMENTAL SYMBOLS
A	8-6-96	REDRAWN
DATE		REVISION

STANDARD CODE FOR TRAFFIC SIGNALS/ STREET LIGHTING

CITY OF CHICAGO
DEPT. OF STREETS AND SANITATION
BUREAU OF ELECTRICITY
DIVISION OF ELECTRICAL ENGINEERING

DRAFTSMAN:	CHIEF DRAFTSMAN:	ENGINEER:
R. IVY	R. CARTER	R. POOL/R.C/W.T.

SUPERVISING ENGINEER: ELEC. DESIGN ENGR.

ENGINEER OF ELECTRICITY:

GEN'L SUPT. OF CONSTRUCTION:

DEPUTY COMMISSIONER: Brian S. Murphy

DWG. NO. 826

SIZE: 22"| 36" SCALE: DATE:

MODEL: Default
FILE NAME: F:\Projects\1056\Eisenhower IDOT-Collins\Design\Shts\Traffic Signals\Sacramento\TS 01 - CDOT CODE.dgn

AMES Engineering, Inc.
CONSULTING ENGINEERS
6330 Belmont Road, Suite 4B
Downers Grove, IL 60516

USER NAME = Srahman		DESIGNED - JR		REVISED -	
		DRAWN - SR		REVISED -	
PLOT SCALE = 39.9985 ' / in.		CHECKED - JR		REVISED -	
PLOT DATE = 9/9/2025		DATE - $DATE		REVISED -	

STATE OF ILLINOIS
DEPARTMENT OF TRANSPORTATION

TRAFFIC CONTROL SIGNALS
S. SACRAMENTO BOULEVARD AND W. VAN BUREN STREET
S. SACRAMENTO BOULEVARD AND W. CONGRESS PARKWAY

SCALE: SHEET OF SHEETS STA. TO STA.

F.A.I. RTE.	SECTION	COUNTY	TOTAL SHEETS	SHEET NO.
290	2019-192-B-R	COOK	237	98
		CONTRACT NO. 62K65		
	ILLINOIS FED. AID PROJECT			

CITY OF CHICAGO STANDARD DRAWINGS

579. STANDARD METHOD FOR BACKFILLING CABLE AND CONDUIT TRENCHES IN SODDED PARKWAY AND LAWNS.

659. 2 BOLT MAST ARM ATTACHMENT POLE PLATE DETAILS

729. 3' X 4' X 4' CONCRETE MANHOLE WITH 30" FRAME AND COVER

730. 3' X 4' X 4' CONCRETE MANHOLE WITH 24" FRAME AND COVER

732. 4' X 6' X 6' CONCRETE MANHOLE WITH 24" FRAME AND COVER

733. 4' X 6' X 6' CONCRETE MANHOLE WITH 30" FRAME AND COVER

736. TYPICAL GROUNDING METHODS FOR BUREAU OF ELECTRICITY EQUIPMENT

740. TRAFFIC SIGNAL UPPER AND LOWER BRACKET ARM ASSEMBLY

741. TRAFFIC SIGNAL BRACKET ARM ASSEMBLY

806. 1½" X 60" STEEL ANCHOR ROD

808. 5.17" X 10.0" STEEL/34'-6" POLE 7 OR 3 GAUGE

811. 1-1/4" X 60" STEEL ANCHOR ROD

813. INSTALLATION METHOD OF INSTALLING CONDUIT UNDER PAVED ROADWAY

816. FOUNDATION FOR 34'-6" TRAFFIC SIGNAL POLE WITH 17¼" BOLT CIRCLE

817. FOUNDATION FOR 34'-6" TRAFFIC SIGNAL POLE WITH 16 1/2" BOLT CIRCLE

818 FOUNDATION FOR 34' - 6" ARTERIAL STREET LIGHT OR TRAFFIC SIGNAL POLE - 3 OR 7 GUAGE WITH 15" BOLT CIRCLE

827. 7.67" X 12.5" STEEL/34-6-" POLE 3 GAUGE

834. TYPICAL TRAFFIC SIGNAL MOUNTING DETAILS

835. TYPICAL TRAFFIC SIGNAL MOUNTING DETAILS

839. 12' MAST ARM FOR 2-BOLT ATTACHMENT

867. 30" DIA. CONCRETE HANDHOLE

870. STEEL TRAFFIC SIGNAL MAST ARM-MONOTUBE

871. 36" DIA. HEAVY DUTY CONCRETE HANDHOLE WITH 30" FRAME AND COVER FOR STREET INSTALLATION

872. 24" DIA. CIRCULAR MANHOLE FRAME AND COVER WITH 41-3/4" O.D. FRAME

874. 30" CIRCULAR STREET MANHOLE FRAME

888. TYPE "P" FOUNDATION FOR BASE MOUNTED TRAFFIC SIGNAL CONTROL CABINET

953. FOUNDATION FOR CHICAGO 200 GATEWAY POLE & CHICAGO 2000 PEDESTRIAN POLE

954. JUNCTION BOX FOR TRAFFIC SIGNAL & FIRE ALARM

7878. PULLING IRON

10927. 30" CIRCULAR STREET MANHOLE COVER

11420-A. CAST POLETOP FOR STEEL POLE.

11925. INSTALLATION OF SERVICE EQUIPMENT ON C.E. CO. WOOD POLES

11984. BANDING FITTINGS FOR POLE MOUNTING TRAFFIC SIGNAL

12268-A. TRAFFIC CONTROL SIGNALS STRIP WIRING LAYOUT

A		
DATE	REVISION	

TRAFFIC CONTROL SIGNALS
INDEX OF STANDARD DRAWINGS

CITY OF CHICAGO
DEPARTMENT OF TRANSPORTATION
DIVISION OF ENGINEERING

CONSULTING ENGINEERS:

AMES Engineering, Inc.
CONSULTING ENGINEERS
6330 Belmont Road, Suite 4B
Downers Grove, IL 60516

PROJECT # 10 8

DWG. NO.

SIZE: 22" X 34" | SCALE: AS NOTED | DATE: 9/8/2025

AMES Engineering, Inc.
CONSULTING ENGINEERS
6330 Belmont Road, Suite 4B
Downers Grove, IL 60516

USER NAME = Srahman	DESIGNED - TM	REVISED -	
	DRAWN - SR	REVISED -	
PLOT SCALE = 99.9962 ' / in.	CHECKED - AS	REVISED -	
PLOT DATE = 9/9/2025	DATE - $DATE	REVISED -	

STATE OF ILLINOIS
DEPARTMENT OF TRANSPORTATION

TRAFFIC CONTROL SIGNALS
S. PAULINA STREET AND W. VAN BUREN STREET
S. PAULINA STREET AND W. CONGRESS PARKWAY

SCALE: | SHEET OF SHEETS | STA. | TO STA.

F.A.I. RTE.	SECTION	COUNTY	TOTAL SHEETS	SHEET NO.
290	2019-192-B-R	COOK	237	99
		CONTRACT NO. 62K64		
	ILLINOIS	FED. AID PROJECT		

MODEL: Default
FILE NAME: F:\Projects\1058\Eisenhower IDOT-Collins\Design\Shts\Traffic Signals\Sacramento\TS 02 - CDOT Index.dgn

SCHEDULE OF QUANTITIES

ITEM NO.	DESCRIPTION	UNIT	SACRAMENTO BLVD. @ CONGRESS PARKWAY	SACRAMENTO BLVD. @ VAN BUREN STREET	TOTAL
1	ELECTRICAL MANHOLE 3'X4'X4' WITH 30" FRAME AND LID	EACH	1	1	2.0
2	HANDHOLE (SPECIAL)	EACH	3	4	7.0
3	DRILL EXISTING MANHOLE OR HANDHOLE	EACH	1	1	2.0
4	CONDUIT IN TRENCH 3" PVC (SCHEDULE 40)	FOOT	940	1020	1960.0
5	UNDERGROUND CONDUIT, 2" DIA. PVC COATED GALVANIZED STEEL	FOOT		19	19.0
6	CONDUIT ATTACHED TO STRUCTURE, 2" DIA., GALVANIZED STEEL	FOOT	486		486.0
7	UNDERGROUND CONDUIT, 4" DIA. PVC COATED GALVANIZED STEEL	FOOT	32		32.0
8	TRENCH AND BACKFILL WITH SCREENINGS	FOOT	972	1049	2021.0
9	CONCRETE FOUNDATION FOR TYPE "SUPER P" BASE MOUNTED TRAFFIC SIGNAL CONTROLLER CABINET	EACH	1	1	2.0
10	CONCRETE FOUNDATION, 24" DIAMETER, 1 1/4" ANCHOR RODS, 15" BOLT CIRCLE, 7 FEET	EACH	1	1	2.0
11	CONCRETE FOUNDATION, 24" DIAMETER, 1 1/4" ANCHOR RODS, 15" BOLT CIRCLE, 9 FEET	EACH	2	1	3.0
12	CONCRETE FOUNDATION, 30" DIAMETER, 1 1/4" ANCHOR RODS, 17 1/4" BOLT CIRCLE, 9 FEET	EACH	1		1.0
13	CONCRETE FOUNDATION, 30" DIAMETER, 1 1/4" ANCHOR RODS, 16 1/2" BOLT CIRCLE, 11 FEET	EACH		2	2.0
14	ELECTRIC CABLE IN CONDUIT, SIGNAL NO. 14 19/C	FOOT	865	916	1781.0
15	ELECTRIC CABLE IN CONDUIT, SERVICE, NO. 2 2C	FOOT	365	179	544.0
16	INTERCEPT EXISTING CONDUIT	EACH		1	1.0
17	ADVANCED TRANSPORTATION CONTROLLER, 16 LOAD BAY, "SUPER P" CABINET UPS	EACH	1	1	2.0
18	POLE STEEL, ANCHOR BASE, 10" DIAMETER, 7 GAUGE, 34'-6"	EACH	1	1	2.0
19	POLE STEEL, ANCHOR BASE, 10" DIAMETER, 3 GAUGE, 34'-6"	EACH	2	1	3.0
20	POLE STEEL, ANCHOR BASE, 11" DIAMETER, 3 GAUGE, 34'-6"	EACH	1		1.0
21	POLE STEEL, ANCHOR BASE, 12 1/2" DIAMETER, 3 GAUGE, 34'-6"	EACH		2	2.0
22	TRAFFIC SIGNAL POST, ALUMINUM, 10'	EACH	3	3	6.0
23	CONCRETE FOUNDATION, TYPE A, 12-INCH DIAMETER	FOOT	12	12	24.0
24	JUNCTION BOX, POLE OR POST MOUNTED	EACH	4	4	8.0
25	PLATE, WELD TO POLE 2-BOLT	EACH	3	3	6.0
26	SIGNAL HEAD, POLYCARBONATE, LED, 3-SECTION, BRACKET MOUNTED	EACH	3	2	5.0
27	SIGNAL HEAD, POLYCARBONATE, LED, 3-SECTION, MAST ARM MOUNTED	EACH	4	5	9.0
28	SIGNAL HEAD, POLYCARBONATE, LED, 4-SECTION, BRACKET MOUNTED	EACH	1	1	2.0
29	SIGNAL HEAD, POLYCARBONATE, LED, 4-SECTION, MAST ARM MOUNTED	EACH	1	1	2.0
30	PEDESTRIAN SIGNAL HEAD, POLYCARBONATE, LED, 1-FACE, BRACKET MOUNTED WITH COUNT DOWN TIMER	EACH	6	6	12.0
31	ACCESSIBLE PEDESTRIAN SIGNALS	EACH	6	6	12.0
32	FIBER OPTIC CABLE IN CONDUIT, NO 62.5/125, MM12F, SM24F	FOOT	650		650.0
33	MAST ARM, STEEL, MONOTUBE, 20 FOOT	EACH	1	1	2.0
34	MAST ARM, STEEL, MONOTUBE, 26 FOOT	EACH	1		1.0
35	MAST ARM, STEEL, MONOTUBE, 30 FOOT	EACH	1		1.0
36	MAST ARM, STEEL, MONOTUBE, 35 FOOT	EACH		2	2.0
37	RELOCATE EXISTING CAMERA	EACH		1	1.0
37	TEMPORARY TRAFFIC SIGNAL INSTALLATION	EACH	1	1	2.0
38	REMOVE EXISTING TRAFFIC SIGNAL EQUIPMENT	EACH	1	1	2.0
39	STREET NAME SIGNS	EACH	3	3	6.0

A		
DATE	REVISION	

TRAFFIC CONTROL SIGNALS
SCHEDULE OF QUANTITIES

S. SACRAMENTO BLVD. &
W. CONGRESS PKWY AND S. SACRAMENTO
BLVD. AND W. VAN BUREN ST.

CITY OF CHICAGO
DEPARTMENT OF TRANSPORTATION
DIVISION OF ENGINEERING

CONSULTING ENGINEERS:

AMES Engineering, Inc.
CONSULTING ENGINEERS
6330 Belmont Road, Suite 4B
Downers Grove, IL 60516

PROJECT # 1058

DWG. NO.

SIZE: 22" X 34" | SCALE: AS NOTED | DATE: 9/12/2025

AMES Engineering, Inc.
CONSULTING ENGINEERS
6330 Belmont Road, Suite 4B
Downers Grove, IL 60516

USER NAME = tmickey	DESIGNED - JR	REVISED -	
	DRAWN - SR	REVISED -	
PLOT SCALE = 39.9984 ' / in.	CHECKED - JR	REVISED -	
PLOT DATE = 10/8/2025	DATE - $DATE	REVISED -	

STATE OF ILLINOIS
DEPARTMENT OF TRANSPORTATION

TRAFFIC CONTROL SIGNALS
S. SACRAMENTO BOULEVARD AND W. VAN BUREN STREET
S. SACRAMENTO BOULEVARD AND W. CONGRESS PARKWAY

SCALE: | SHEET OF SHEETS | STA. | TO STA.

F.A.I. RTE.	SECTION	COUNTY	TOTAL SHEETS	SHEET NO.
290	2019-192-B-R	COOK	237	100
		CONTRACT NO. 62K65		
	ILLINOIS FED. AID PROJECT			

MODEL: Default
FILE NAME: P:\Projects\1058-Eisenhower IDOT-Collins\Design\Sht\Traffic Signals\Sacramento\TS 03 - CDOT Quantities.dgn

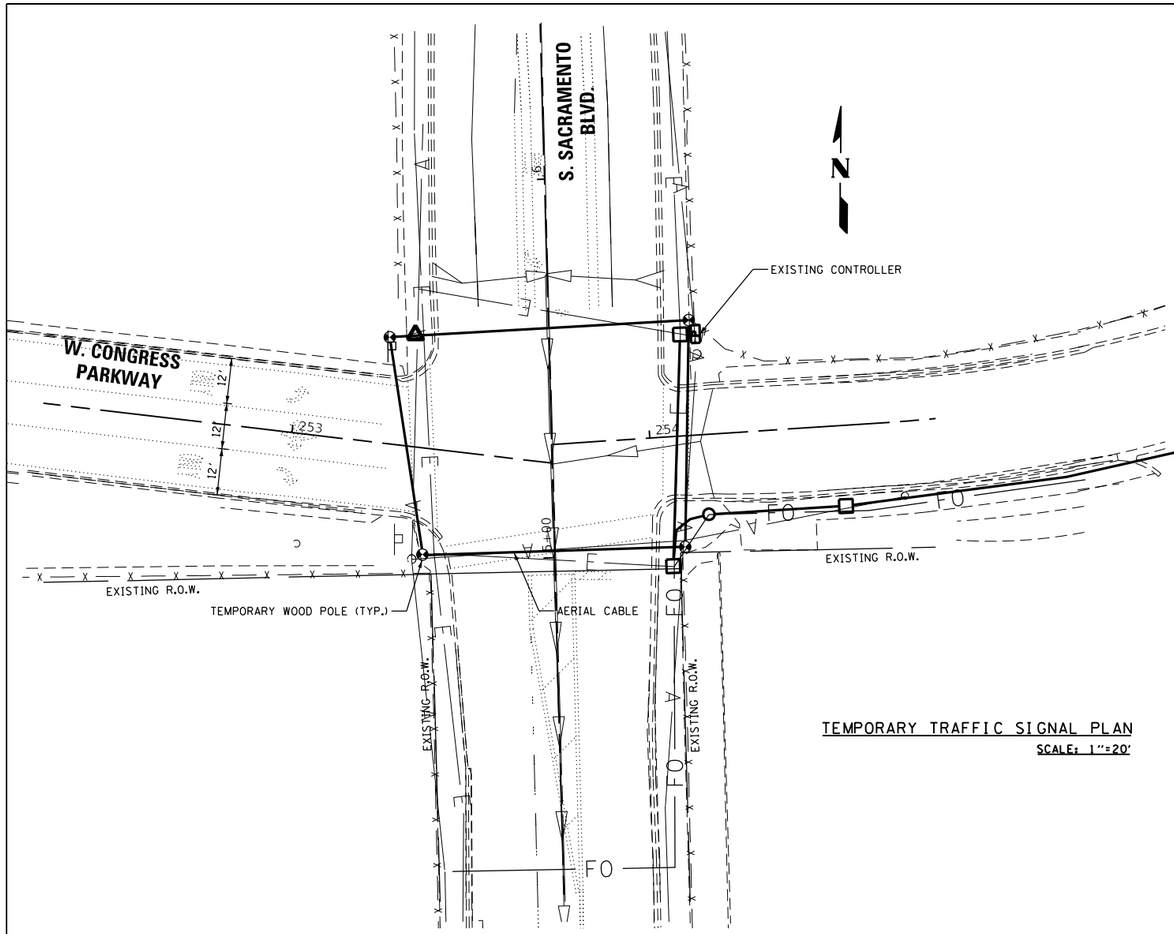

TEMPORARY TRAFFIC SIGNAL PLAN

SCALE: 1"=20'

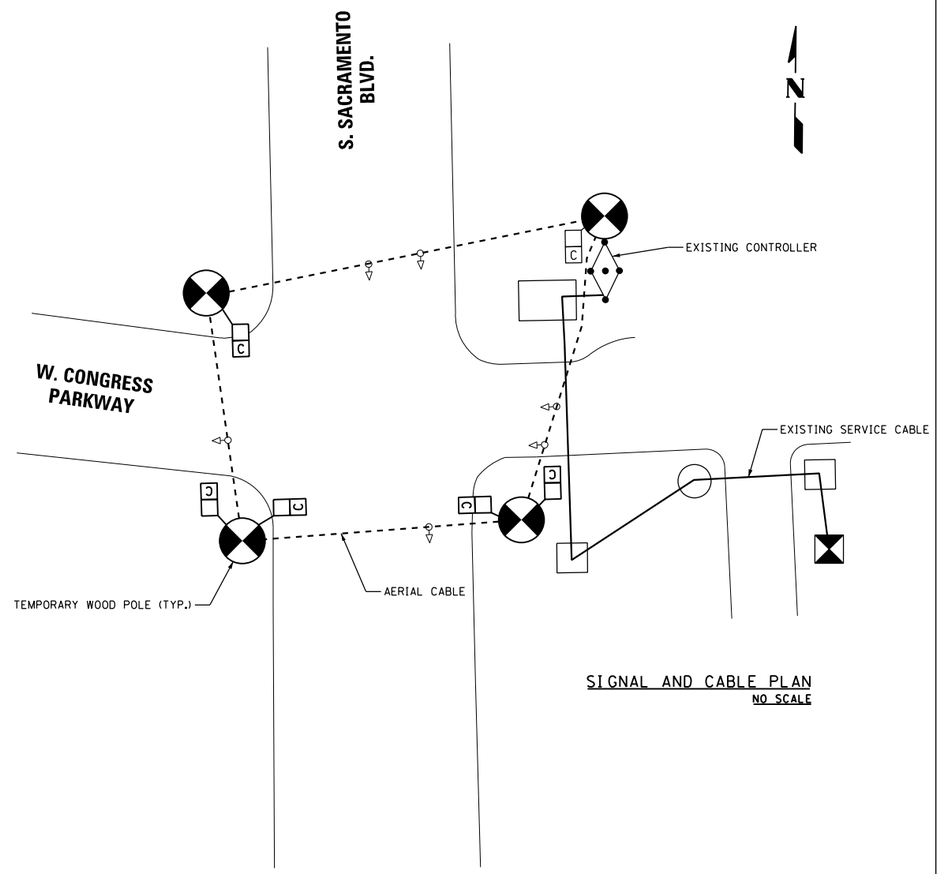

SIGNAL AND CABLE PLAN

NO SCALE

CONSTRUCTION NOTES

- ALL SIGNAL SECTIONS TO BE STANDARD 12" SIZE.
- ALL VEHICULAR SIGNAL HEADS TO BE OF STANDARD LED 3-SECTION UNITS UNLESS OTHERWISE NOTED.
- THE CONTRACTOR SHALL RESTORE ALL AREAS DISTURBED BY THE WOOD POLES. THIS INCLUDES PCC SIDEWALK RESTORATION.

A	
DATE	REVISION

TEMPORARY TRAFFIC SIGNALS

S. SACRAMENTO BLVD. &
W. CONGRESS PARKWAY

CITY OF CHICAGO
DEPARTMENT OF TRANSPORTATION
DIVISION OF ENGINEERING

CONSULTING ENGINEERS:

AMES Engineering, Inc.
CONSULTING ENGINEERS
6330 Belmont Road, Suite 4B
Downers Grove, IL 60516

PROJECT # 10 8

DWG. NO. T

SIZE: 22" X 34" | SCALE: AS NOTED | DATE: 9/12/2025

AMES Engineering, Inc.
CONSULTING ENGINEERS
6330 Belmont Road, Suite 4B
Downers Grove, IL 60516

USER NAME = Srahman	DESIGNED - JR	REVISED -	
	DRAWN - SR	REVISED -	
PLOT SCALE = 39.998 ' / In.	CHECKED - JR	REVISED -	
PLOT DATE = 9/9/2025	DATE - $DATE	REVISED -	

STATE OF ILLINOIS
DEPARTMENT OF TRANSPORTATION

TRAFFIC CONTROL SIGNALS
S. SACRAMENTO BOULEVARD AND W. VAN BUREN STREET
S. SACRAMENTO BOULEVARD AND W. CONGRESS PARKWAY

SCALE: | SHEET OF SHEETS | STA. | TO STA.

F.A.I. RTE.	SECTION	COUNTY	TOTAL SHEETS	SHEET NO.
290	2019-192-B-R	COOK	237	101
		CONTRACT NO. 62K65		
	ILLINOIS	FED. AID PROJECT		

MODEL: Default
FILE NAME: F:\Projects\1050-Eisenhower IDOT-Collins\Design\Shl\Traffic Signals\Sacramento\TS (4 TMP - Sacramento and Congress.dgn

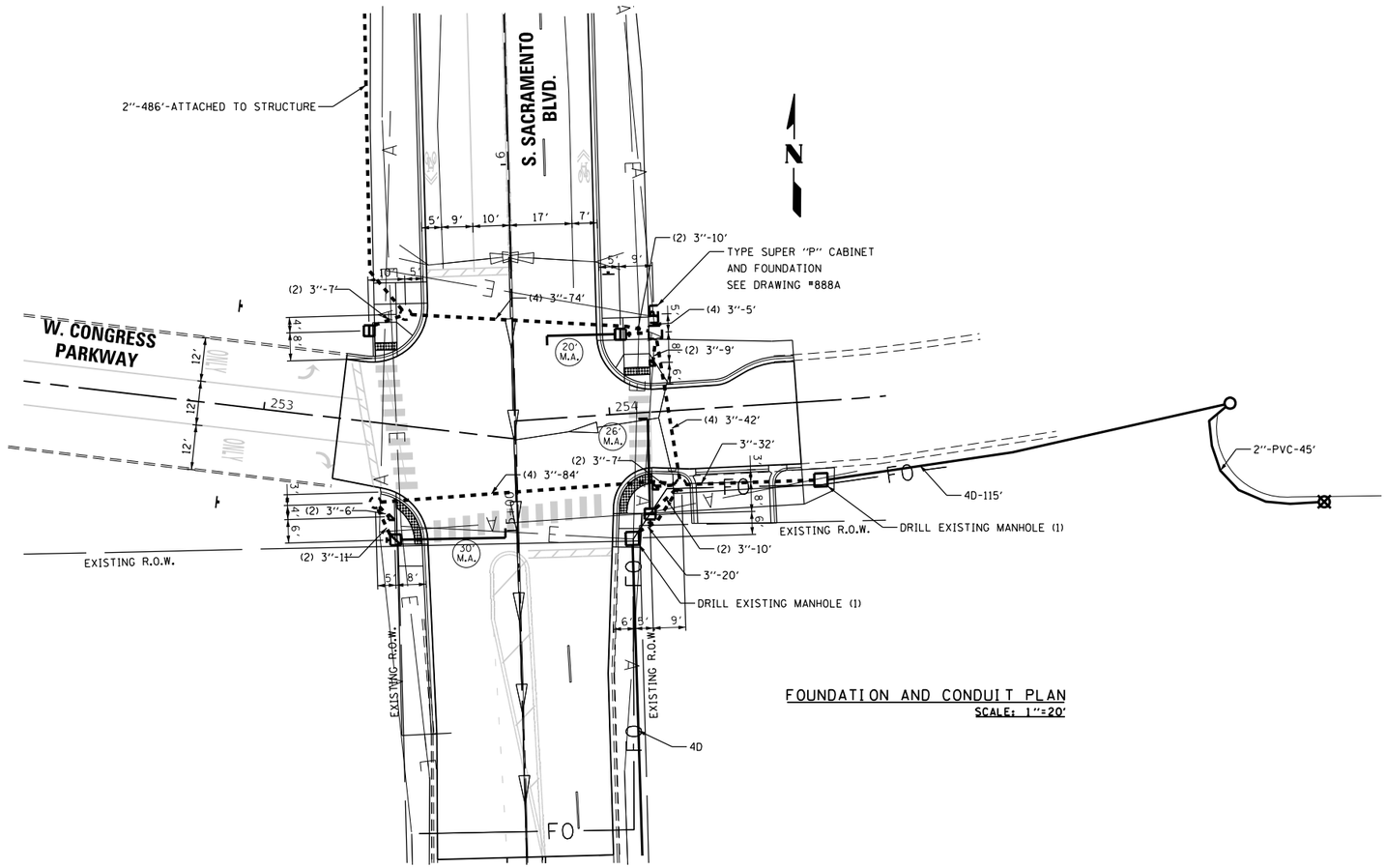

FOUNDATION AND CONDUIT PLAN
SCALE: 1"=20'

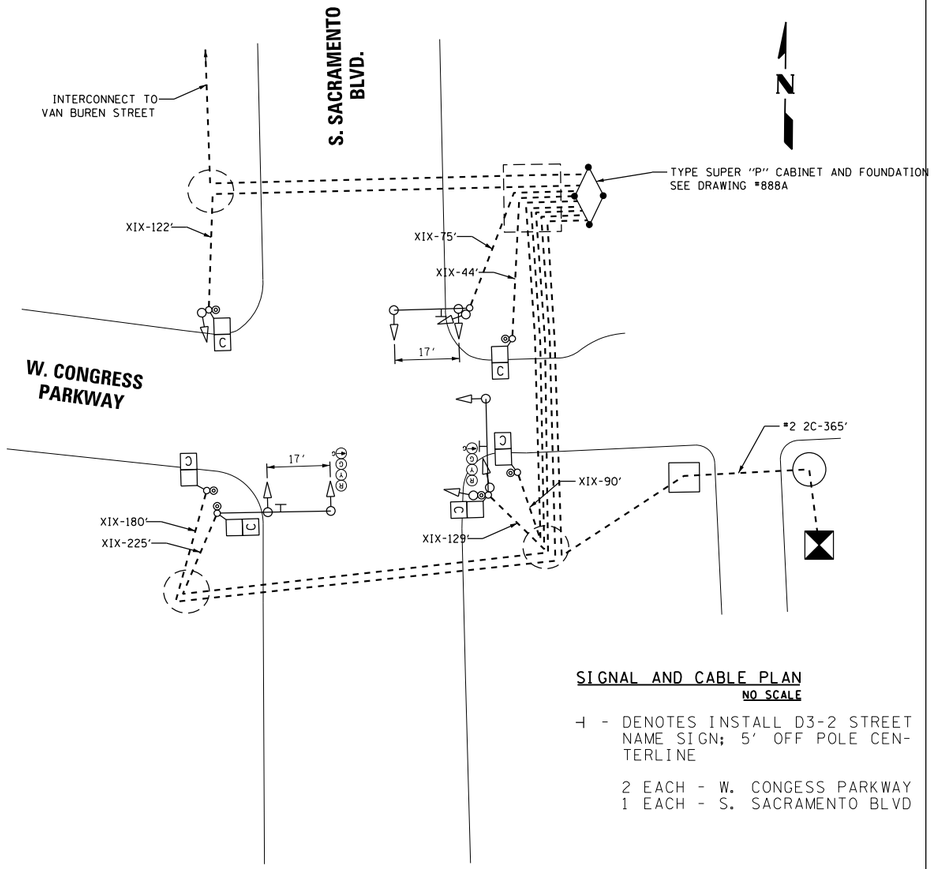

SIGNAL AND CABLE PLAN
NO SCALE

⊣ - DENOTES INSTALL D3-2 STREET NAME SIGN; 5' OFF POLE CENTERLINE

2 EACH - W. CONGESS PARKWAY
1 EACH - S. SACRAMENTO BLVD

CONSTRUCTION NOTES

- FOREMAN TO CALL ALL UG UTILITIES PRIOR TO DIGGING TO DETERMINE THE EXACT LOCATION OF THEIR UG FACILITIES.
- MAINTAIN 3' MINIMUM CLEARANCE FROM ALL GAS MAIN.
- ALL SIGNAL SECTIONS TO BE STANDARD 12" SIZE.
- ALL VEHICULAR SIGNAL HEADS TO BE OF STANDARD LED 3-SECTION UNITS UNLESS OTHERWISE NOTED.
- ALL PEDESTRIAN SIGNAL HEADS TO BE 16" LED 1-SECTION UNITS WITH COUNTDOWN TIMERS, AND TO BE INSTALLED BELOW VEHICULAR SIGNAL WHERE APPLICABLE.

A		
DATE	REVISION	

TRAFFIC CONTROL SIGNALS

S. SACRAMENTO BLVD. &
W. CONGRESS PARKWAY

CITY OF CHICAGO
DEPARTMENT OF TRANSPORTATION
DIVISION OF ENGINEERING

CONSULTING ENGINEERS:

AMES Engineering, Inc.
CONSULTING ENGINEERS
6330 Belmont Road, Suite 4B
Downers Grove, IL 60516

PROJECT # 10 8

DWG. NO.
XXXX

SIZE: 22" X 34" | SCALE: AS NOTED | DATE: 9/12/2025

AMES Engineering, Inc.
CONSULTING ENGINEERS
6330 Belmont Road, Suite 4B
Downers Grove, IL 60516

USER NAME = Srahman	DESIGNED - JR	REVISED -	
	DRAWN - SR	REVISED -	
PLOT SCALE = 39.998 ' / in.	CHECKED - JR	REVISED -	
PLOT DATE = 9/9/2025	DATE - $DATE	REVISED -	

STATE OF ILLINOIS
DEPARTMENT OF TRANSPORTATION

TRAFFIC CONTROL SIGNALS
S. SACRAMENTO BOULEVARD AND W. VAN BUREN STREET
S. SACRAMENTO BOULEVARD AND W. CONGRESS PARKWAY

SCALE: | SHEET OF SHEETS | STA. | TO STA.

F.A.I. RTE.	SECTION	COUNTY	TOTAL SHEETS	SHEET NO.
290	2019-192-B-R	COOK	237	102
		CONTRACT NO. 62K65		
	ILLINOIS	FED. AID PROJECT		

MODEL: Default
FILE NAME: F:\Projects\1058-Eisenhower IDOT-Collins Design\Shit\Traffic Signals\Sacramento\TS 05 TS MOD - Sacramento and Congress.dgn

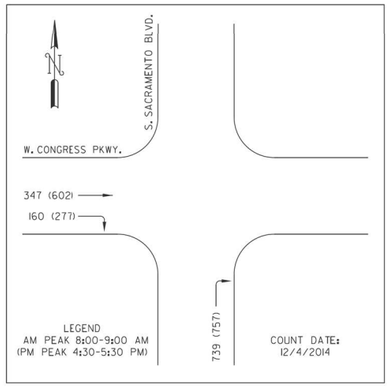

TRAFFIC SIGNAL REQUIREMENTS

NOTES:

1. SACRAMENTO AVENUE, SPEED LIMIT 30 MPH
   CONGRESS PARKWAY, SPEED LIMIT 30 MPH

GENERAL NOTES, TRAFFIC SIGNAL REQUIREMENTS

1. UNLESS OTHERWISE NOTED ALL VEHICULAR SIGNALS SHALL BE STANDARD 12-INCH DIA., ADJUSTABLE 3-SECTION UNITS, AND ALL PEDESTRIAN SIGNALS SHALL BE STANDARD 16-INCH, ADJUSTABLE, 1-SECTION UNITS WITH I.T.E.-SPECIFICATION ('HAND-MAN') SYMBOLIC LENSES AND COUNTDOWN TIMERS. ALL OPTICALLY PROGRAMMABLE SHALL BE DENOTED BY AN ASTERISK (*), OR BY THE DESIGNATION "3M", AND SHALL BE AIMED AND PROGRAMMED WITH THE GUIDANCE OF THE DESIGNING TRAFFIC ENGINEER.
2. UNLESS OTHERWISE NOTED, ALL MAST ARMS SHOWN SHALL BE CANTILEVER MOUNTED, TAPERED STEEL, MONOTUBE ARM.
3. ANY SIGNAL MOUNTING SHOWN LABELED IS THE RECOMMENDATION OF THE DESIGNING TRAFFIC ENGINEER, AND SHALL BE FINALIZED BY THE DIVISION OF ELECTRICAL OPERATIONS. ALL SIGNAL HARDWARE SHALL PREFERABLY BE INSTALLED ON THE SIDE OF POLE/PEDESTAL AWAY FROM THE TRAVELED WAY.
4. CARE SHALL BE TAKEN DURING CONSTRUCTION TO ACCOMMODATE ANY UNDERGROUND STRUCTURES ENCOUNTERED (VAULTS, MANHOLES, CONDUITS, ETC.).
5. A MINIMUM DISTANCE OF 3 FEET FROM CURB FACE TO POLE/FEDESTAL CENTERLINE IS DESIRABLE, BUT MAY BE CHANGED FOR THE ABOVE MENTIONED ACCOMMODATION, UPON CONSULTING WITH THE DESIGNING TRAFFIC ENGINEER.
6. TACTILE ARROW FOR APS PUSHBUTTONS SHALL BE ALIGNED PARALLEL TO THE DIRECTION OF TRAVEL ON THE ASSOCIATED CROSSWALK.

LEGEND

- PROPOSED TRAFFIC SIGNAL HEAD
- PROPOSED COUNTDOWN PEDESTRIAN SIGNAL
- PROPOSED TRAFFIC SIGNAL POLE OR POST
- PROPOSED TRAFFIC SIGNAL MAST ARM
- TEMPORARY WOOD POLE

CONSULTANT FIRM NAME/ ADDRESS AMES Engineering, Inc. CONSULTING ENGINEERS 6330 Belmont Road, Suite 4B Downers Grove, IL 60516	CITY OF CHICAGO DEPARTMENT OF TRANSPORTATION DIVISION OF TRAFFIC SAFETY
	TRAFFIC SIGNAL REQUIREMENT PLAN
	S. SACRAMENTO BLVD. AT W. CONGESS PARKWAY - STAGES I AND II.
DESIGNED BY: TOBY MICKEY	REVIEWED BY: TRAFFIC ENGINEER
APPROVED BY: AHSAN SIDDIQI	APPROVED BY: TRAFFIC ENGINEER
DATE: 08-01-2025	DATE: / SCALE: 1"=20' / SHEET 1 OF 1

MODEL: Default
FILE NAME: P:\Projects\1058-Eisenhower IDOT-Collins\Design\Shift\Traffic Signal\Sacramento\TS 06 MOT TSR - Sacramento and Congress.dgn

AMES Engineering, Inc. CONSULTING ENGINEERS 6330 Belmont Road, Suite 4B Downers Grove, IL 60516	USER NAME = Srahman	DESIGNED - JR	REVISED -
		DRAWN - SR	REVISED -
	PLOT SCALE = 39.998 ' / In.	CHECKED - JR	REVISED -
	PLOT DATE = 9/9/2025	DATE - $DATE	REVISED -

STATE OF ILLINOIS
DEPARTMENT OF TRANSPORTATION

TRAFFIC CONTROL SIGNALS
S. SACRAMENTO BOULEVARD AND W. VAN BUREN STREET
S. SACRAMENTO BOULEVARD AND W. CONGRESS PARKWAY

SCALE: | SHEET OF SHEETS | STA. TO STA.

F.A.I. RTE.	SECTION	COUNTY	TOTAL SHEETS	SHEET NO.
290	2019-192-B-R	COOK	237	103
		CONTRACT NO. 62K65		
	ILLINOIS	FED. AID PROJECT		

DIAL	CYCLE LENGTH	OFFSET	TIMES OF OPERATION	FLASH OPERATION
1	100"	0"	ALL OTHER TIMES	R02, R04, R08.
2	100"	0"	6:00 TO 10:00 AM MONDAY - FRIDAY	WALK/DON'T WALK OFF
3	100"	0"	3:00 TO 7:00 PM MONDAY - FRIDAY	

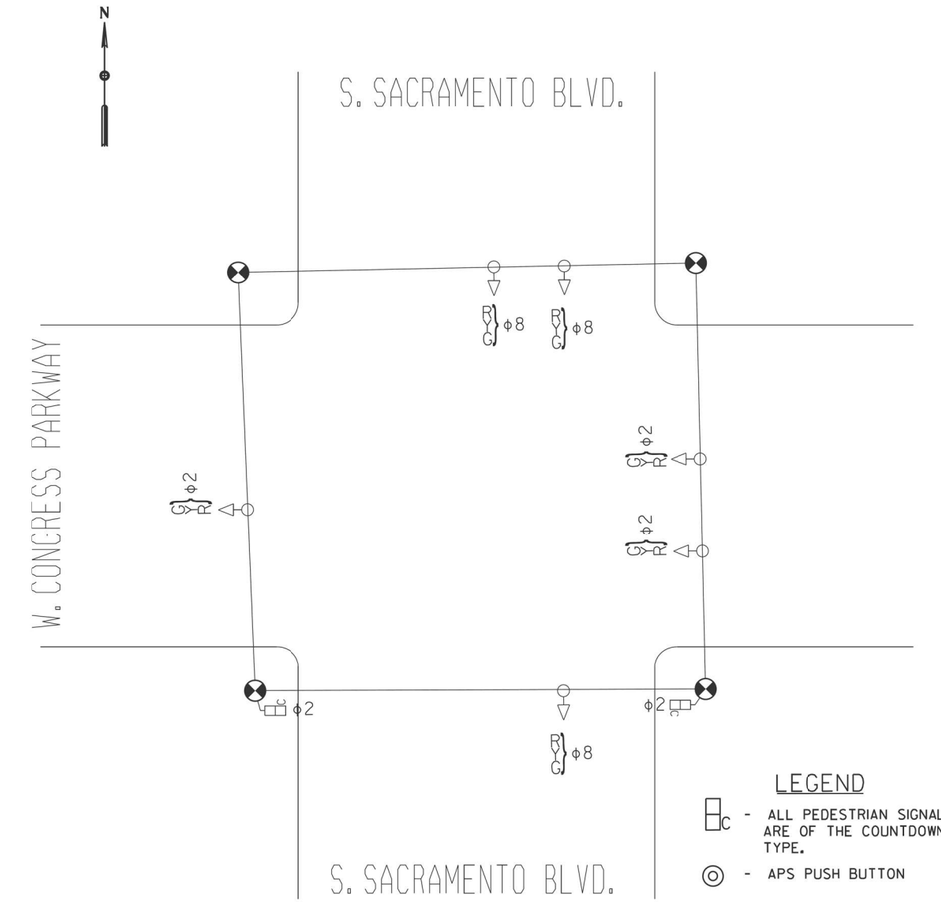

S. SACRAMENTO BLVD. AND W. CONGRESS PARKWAY STAGES 1 AND 2

DIAL 1

	PHASE							
PHASE NUMBER	1	2	3	4	5	6	7	8
DIRECTION	WBLT	EB	NBLT	SB	EBLT	WB	SBLT	NB
MINIMUM GREEN								
VEHICLE EXTENSION								
MAX GREEN (MAX I)		36						56
YELLOW CHANGE		3						3
RED CLEARANCE		1						1
WALK		25						
PED CLEARANCE		11						
SPLITS		40						60
COORDINATED PHASE								

DIAL 2

	PHASE							
PHASE NUMBER	1	2	3	4	5	6	7	8
DIRECTION	WBLT	EB	NBLT	SB	EBLT	WB	SBLT	NB
MINIMUM GREEN								
VEHICLE EXTENSION								
MAX GREEN (MAX I)		36						56
YELLOW CHANGE		3						3
RED CLEARANCE		1						1
WALK		25						
PED CLEARANCE		11						
SPLITS		40						60
COORDINATED PHASE								

DIAL 3

	PHASE							
PHASE NUMBER	1	2	3	4	5	6	7	8
DIRECTION	WBLT	EB	NBLT	SB	EBLT	WB	SBLT	NB
MINIMUM GREEN								
VEHICLE EXTENSION								
MAX GREEN (MAX I)		36						56
YELLOW CHANGE		3						3
RED CLEARANCE		1						1
WALK		25						
PED CLEARANCE		11						
SPLITS		40						60
COORDINATED PHASE								

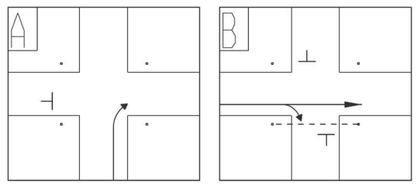

CITY OF CHICAGO
DEPARTMENT OF TRANSPORTATION

S. SACRAMENTO BLVD. & W. CONGRESS PKWY.

TRAFFIC SIGNAL TIMING SCHEDULE

DESIGNED BY: TCM
DATE: 2025/08/06
CHECKED BY: AS
DATE: 2015/08/06

APPROVED:
TRAFFIC ENGINEER:

PAGE 1 OF 1

SENT: INSTALLED:

CONTROLLER SEQUENCE

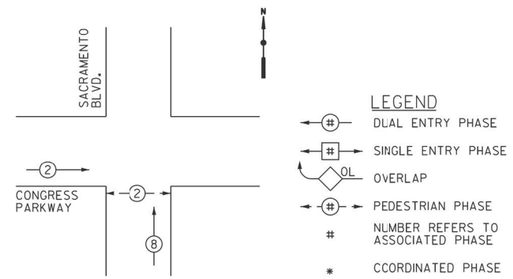

MODEL: Default
FILE NAME: F:\Projects\1088-Eisenhower IDOT-Collins\Design\Std\Traffic Signals\Sacramento\TS 07 TMP Timing Plans • Sacramento and Congress.dgn

AMES Engineering, Inc.
CONSULTING ENGINEERS
6330 Belmont Road, Suite 4B
Downers Grove, IL 60516

USER NAME = Srahman	DESIGNED - JR	REVISED -	
	DRAWN - SR	REVISED -	
PLOT SCALE = 39.998 ' / in.	CHECKED - JR	REVISED -	
PLOT DATE = 9/9/2025	DATE - $DATE	REVISED -	

STATE OF ILLINOIS
DEPARTMENT OF TRANSPORTATION

TRAFFIC CONTROL SIGNALS
S. SACRAMENTO BOULEVARD AND W. VAN BUREN STREET
S. SACRAMENTO BOULEVARD AND W. CONGRESS PARKWAY

SCALE: SHEET OF SHEETS STA. TO STA.

F.A.I. RTE.	SECTION	COUNTY	TOTAL SHEETS	SHEET NO.
290	2019-192-B-R	COOK	237	104
		CONTRACT NO. 62K65		
	ILLINOIS	FED. AID PROJECT		

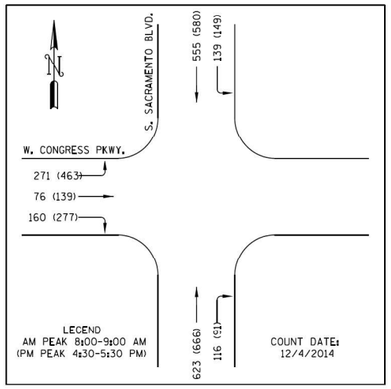

TRAFFIC SIGNAL REQUIREMENTS

NOTES:

1. SACRAMENTO AVENUE, SPEED LIMIT 30 MPH
CONGRESS PARKWAY, SPEED LIMIT 30 MPH

GENERAL NOTES, TRAFFIC SIGNAL REQUIREMENTS

1. UNLESS OTHERWISE NOTED ALL VEHICULAR SIGNALS SHALL BE STANDARD 12-INCH DIA., ADJUSTABLE 3-SECTION UNITS, AND ALL PEDESTRIAN SIGNALS SHALL BE STANDARD 16-INCH, ADJUSTABLE, 1-SECTION UNITS WITH I.T.E.-SPECIFICATION ('HAND-MAN') SYMBOLIC LENSES AND COUNTDOWN TIMERS. ALL OPTICALLY PROGRAMMABLE SHALL BE DENOTED BY AN ASTERISK (•), OR BY THE DESIGNATION "3M", AND SHALL BE AIMED AND PROGRAMMED WITH THE GUIDANCE OF THE DESIGNING TRAFFIC ENGINEER.
2. UNLESS OTHERWISE NOTED, ALL MAST ARMS SHOWN SHALL BE CANTILEVER MOUNTED, TAPERED STEEL, MONOTUBE ARM.
3. ANY SIGNAL MOUNTING SHOWN LABELED IS THE RECOMMENDATION OF THE DESIGNING TRAFFIC ENGINEER, AND SHALL BE FINALIZED BY THE DIVISION OF ELECTRICAL OPERATIONS. ALL SIGNAL HARDWARE SHALL PREFERABLY BE INSTALLED ON THE SIDE OF POLE/PEDESTAL AWAY FROM THE TRAVELED WAY.
4. CARE SHALL BE TAKEN DURING CONSTRUCTION TO ACCOMMODATE ANY UNDERGROUND STRUCTURES ENCOUNTERED (VAULTS, MANHOLES, CONDUITS, ETC.).
5. A MINIMUM DISTANCE OF 3 FEET FROM CURB FACE TO POLE/PEDESTAL CENTERLINE IS DESIRABLE, BUT MAY BE CHANGED FOR THE ABOVE MENTIONED ACCOMMODATION, UPON CONSULTING WITH THE DESIGNING TRAFFIC ENGINEER.
6. TACTILE ARROW FOR APS PUSHBUTTONS SHALL BE ALIGNED PARALLEL TO THE DIRECTION OF TRAVEL ON THE ASSOCIATED CROSSWALK.

LEGEND

- PROPOSED TRAFFIC SIGNAL HEAD
- PROPOSED COUNTDOWN PEDESTRIAN SIGNAL
- PROPOSED TRAFFIC SIGNAL POLE OR POST
- PROPOSED TRAFFIC SIGNAL MAST ARM
- PROPOSED ADA LEVEL LANDING AREA
- PROPOSED APS PUSHBUTTON
- PROPOSED APS PUSHBUTTON SHORT POST

CONSULTANT FIRM NAME/ ADDRESS AMES Engineering, Inc. CONSULTING ENGINEERS 6330 Belmont Road, Suite 4B Downers Grove, IL 60516	CITY OF CHICAGO DEPARTMENT OF TRANSPORTATION DIVISION OF TRAFFIC SAFETY
	TRAFFIC SIGNAL REQUIREMENT PLAN
	S. SACRAMENTO BLVD. AT W. CONGESS PARKWAY
DESIGNED BY: TOBY MICKEY	REVIEWED BY: TRAFFIC ENGINEER
APPROVED BY: AHSAN SIDDIOI	APPROVED BY: TRAFFIC ENGINEER
DATE: 08-01-2025	DATE: / SCALE: 1"=20' / SHEET 1 OF 1

MODEL: Default
FILE NAME: F:\Projects\1058-Eisenhower IDOT-Collins\Design\Sht\Traffic Signals\Sacramento\TS 08 Permanent TSR - Sacramento and Congress.dgn

AMES Engineering, Inc. CONSULTING ENGINEERS 6330 Belmont Road, Suite 4B Downers Grove, IL 60516	USER NAME = tmickey	DESIGNED - JR	REVISED -	STATE OF ILLINOIS DEPARTMENT OF TRANSPORTATION	TRAFFIC CONTROL SIGNALS S. SACRAMENTO BOULEVARD AND W. VAN BUREN STREET S. SACRAMENTO BOULEVARD AND W. CONGRESS PARKWAY
		DRAWN - SR	REVISED -		
	PLOT SCALE = 39.998 ' / in.	CHECKED - JR	REVISED -		
	PLOT DATE = 9/9/2025	DATE - $DATE	REVISED -		SCALE: / SHEET OF SHEETS / STA. / TO STA.

F.A.I. RTE.	SECTION	COUNTY	TOTAL SHEETS	SHEET NO.
290	2019-192-B-R	COOK	237	105
		CONTRACT NO. 62K65		
		ILLINOIS / FED. AID PROJECT		

DIAL	CYCLE LENGTH	OFFSET	TIMES OF OPERATION	FLASH OPERATION
1	100"	0"	ALL OTHER TIMES	R02, R04, R08.
2	100"	0"	6:00 TO 10:00 AM MONDAY - FRIDAY	WALK/DON'T WALK OFF
3	100"	0"	3:00 TO 7:00 PM MONDAY - FRIDAY	

DIAL 1

	PHASE							
PHASE NUMBER	1	2	3	4	5	6	7	8
DIRECTION	WBLT	EB	NBLT	SB	EBLT	WB	SBLT	NB
MINIMUM GREEN								
VEHICLE EXTENSION								
MAX GREEN (MAX 1)		66		26	66			26
YELLOW CHANGE		3		3	3			3
RED CLEARANCE		1		1	1			1
WALK		55		15				15
PED CLEARANCE		1		11				11
SPLITS		70		30	70			30
COORDINATED PHASE								

DIAL 2

	PHASE							
PHASE NUMBER	1	2	3	4	5	6	7	8
DIRECTION	WBLT	EB	NBLT	SB	EBLT	WB	SBLT	NB
MINIMUM GREEN								
VEHICLE EXTENSION								
MAX GREEN (MAX 1)		66		26	66			26
YELLOW CHANGE		3		3	3			3
RED CLEARANCE		1		1	1			1
WALK		55		15				15
PED CLEARANCE		1		11				11
SPLITS		70		30	70			30
COORDINATED PHASE								

DIAL 3

	PHASE							
PHASE NUMBER	1	2	3	4	5	6	7	8
DIRECTION	WBLT	EB	NBLT	SB	EBLT	WB	SBLT	NB
MINIMUM GREEN								
VEHICLE EXTENSION								
MAX GREEN (MAX 1)		66		26	66			26
YELLOW CHANGE		3		3	3			3
RED CLEARANCE		1		1	1			1
WALK		55		15				15
PED CLEARANCE		1		11				11
SPLITS		70		30	70			30
COORDINATED PHASE								

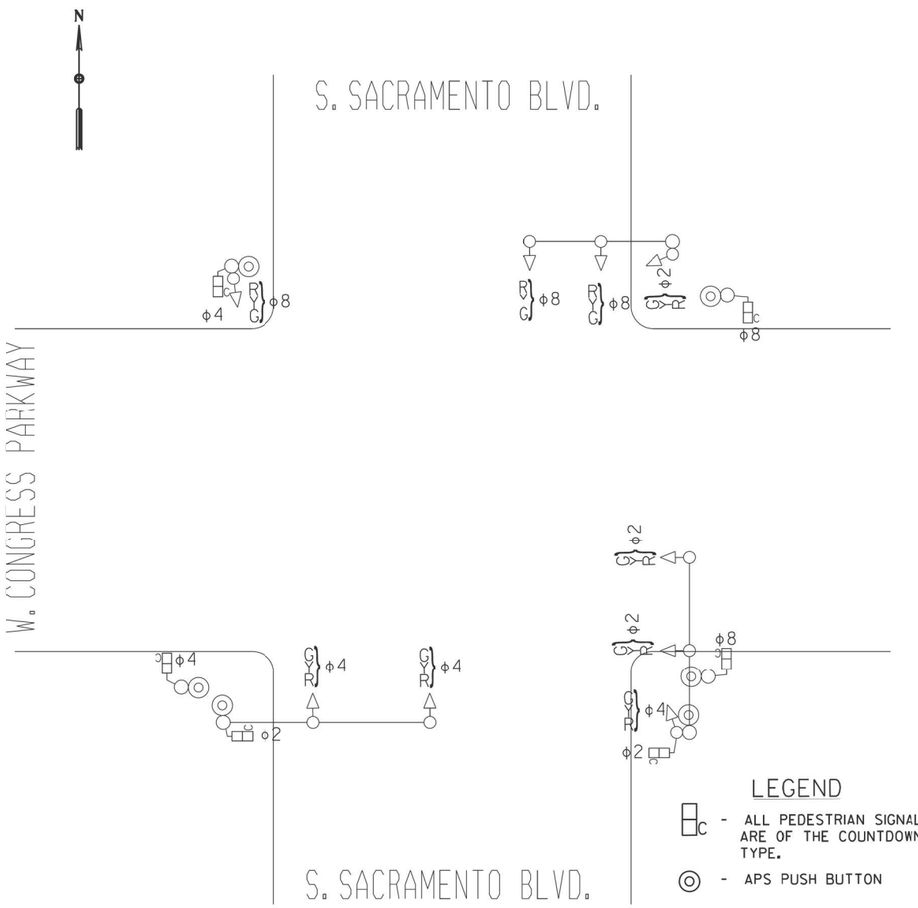

S. SACRAMENTO BLVD. AND W. CONGRESS PARKWAY

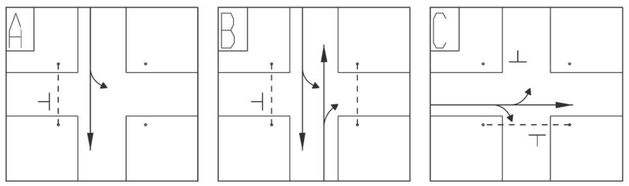

CITY OF CHICAGO
DEPARTMENT OF TRANSPORTATION

S. SACRAMENTO BLVD. & W. CONGRESS PKWY.

TRAFFIC SIGNAL TIMING SCHEDULE

DESIGNED BY: TCM
DATE: 2025/08/06
CHECKED BY: AS
DATE: 2015/08/06

APPROVED:
TRAFFIC ENGINEER:

PAGE 1 OF 1

SENT: INSTALLED:

CONTROLLER SEQUENCE

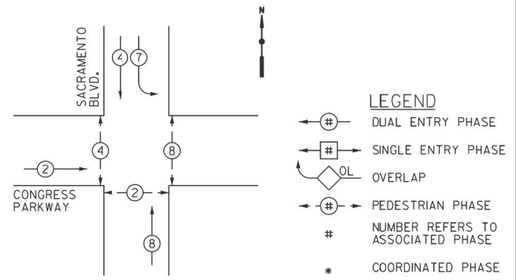

MODEL: Default
FILE NAME: F:\Projects\1058-Eisenhower IDOT-Collins Design\Sht\Traffic Signals\Sacramento\TS 09 Permanent Timing Plans - Sacramento and Congress.dgn

AMES Engineering, Inc.
CONSULTING ENGINEERS
6330 Belmont Road, Suite 4B
Downers Grove, IL 60516

USER NAME = Srahman	DESIGNED - JR	REVISED -	
	DRAWN - SR	REVISED -	
PLOT SCALE = 39.998 ' / In.	CHECKED - JR	REVISED -	
PLOT DATE = 9/9/2025	DATE - $DATE	REVISED -	

STATE OF ILLINOIS
DEPARTMENT OF TRANSPORTATION

TRAFFIC CONTROL SIGNALS
S. SACRAMENTO BOULEVARD AND W. VAN BUREN STREET
S. SACRAMENTO BOULEVARD AND W. CONGRESS PARKWAY

SCALE: SHEET OF SHEETS STA. TO STA.

F.A.I. RTE.	SECTION	COUNTY	TOTAL SHEETS	SHEET NO.
290	2019-192-B-R	COOK	237	106
		CONTRACT NO. 62K65		
	ILLINOIS	FED. AID PROJECT		

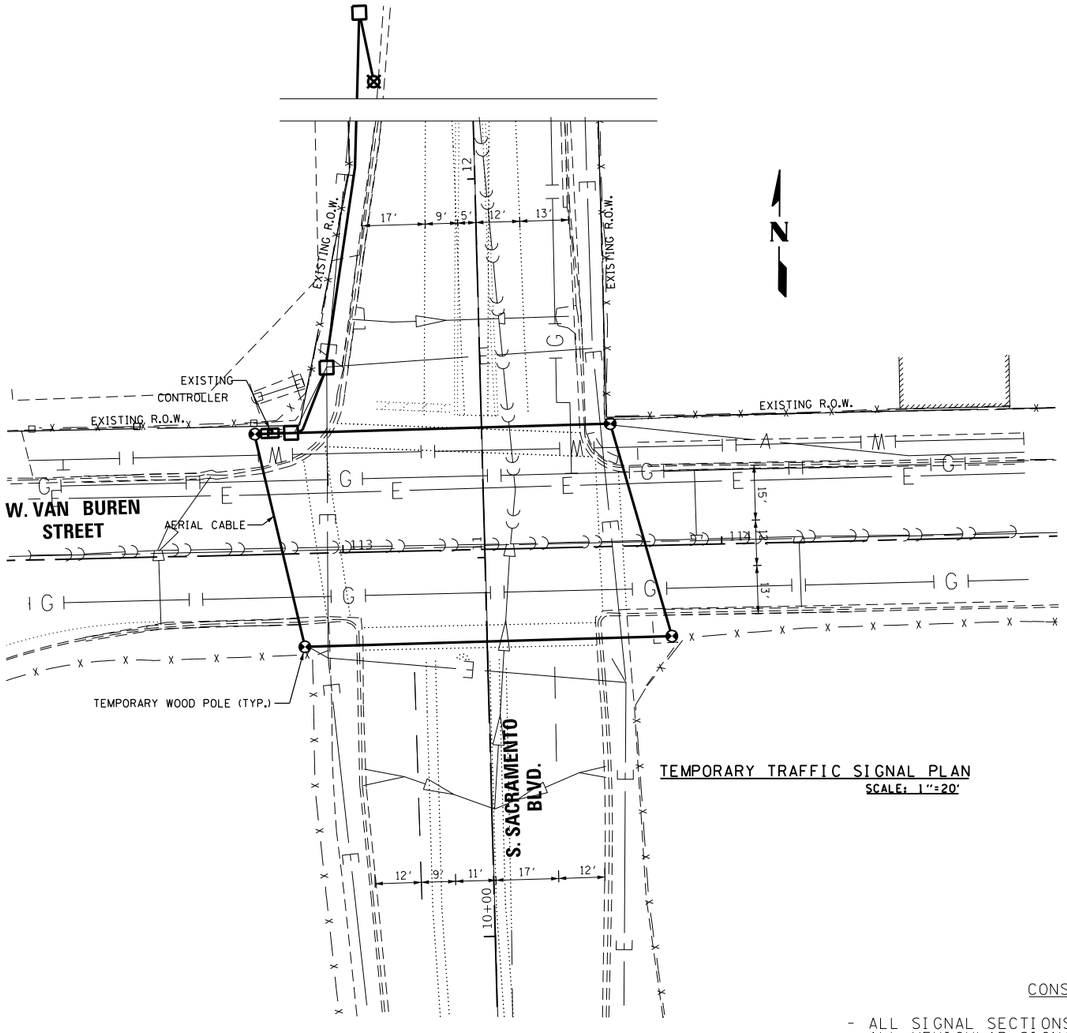

TEMPORARY TRAFFIC SIGNAL PLAN
SCALE: 1"=20'

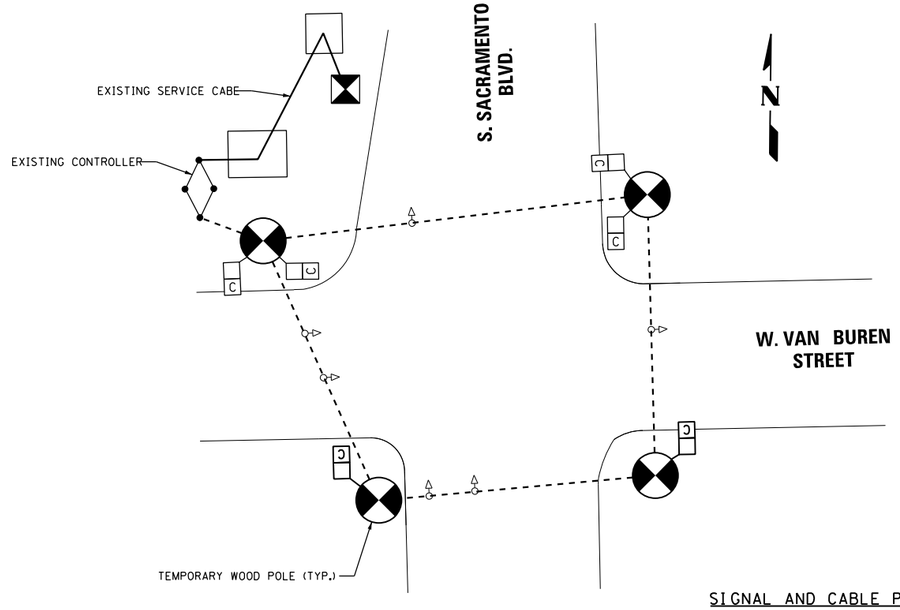

SIGNAL AND CABLE PLAN
NO SCALE

CONSTRUCTION NOTES

- ALL SIGNAL SECTIONS TO BE STANDARD 12" SIZE.
- ALL VEHICULAR SIGNAL HEADS TO BE OF STANDARD LED 3-SECTION UNITS UNLESS OTHERWISE NOTED.
- THE CONTRACTOR SHALL RESTORE ALL AREAS DISTURBED BY THE WOOD POLES. THIS INCLUDES PCC SIDEWALK RESTORATION.

A	
DATE	REVISION

TEMPPORARY TRAFFIC SIGNALS

S. SACRAMENTO BOULEVARD &
W. VAN BUREN STREET

CITY OF CHICAGO
DEPARTMENT OF TRANSPORTATION
DIVISION OF ENGINEERING

CONSULTING ENGINEERS:

AMES Engineering, Inc.
CONSULTING ENGINEERS
6330 Belmont Road, Suite 4B
Downers Grove, IL 60516

PROJECT # 10 8

DWG. NO.
T

SIZE: 22" X 34" | SCALE: AS NOTED | DATE: 6/21/2024

AMES Engineering, Inc.
CONSULTING ENGINEERS
6330 Belmont Road, Suite 4B
Downers Grove, IL 60516

USER NAME = Srahman	DESIGNED - JR	REVISED -	
	DRAWN - SR	REVISED -	
PLOT SCALE = 39.998 ' / In.	CHECKED - JR	REVISED -	
PLOT DATE = 9/9/2025	DATE - $DATE	REVISED -	

STATE OF ILLINOIS
DEPARTMENT OF TRANSPORTATION

TRAFFIC CONTROL SIGNALS
S. SACRAMENTO BOULEVARD AND W. VAN BUREN STREET
S. SACRAMENTO BOULEVARD AND W. CONGRESS PARKWAY

SCALE: | SHEET OF SHEETS | STA. | TO STA.

F.A.I. RTE.	SECTION	COUNTY	TOTAL SHEETS	SHEET NO.
290	2019-192-B-R	COOK	237	107
		CONTRACT NO. 62K65		
	ILLINOIS FED. AID PROJECT			

MODEL: Default
FILE NAME: F:\Projects\10584\Eisenhower IDOT-Collins\Design\Shs\Traffic Signals\Sacramento\TS 10 TMP - Sacramento and Van Buren.dgn

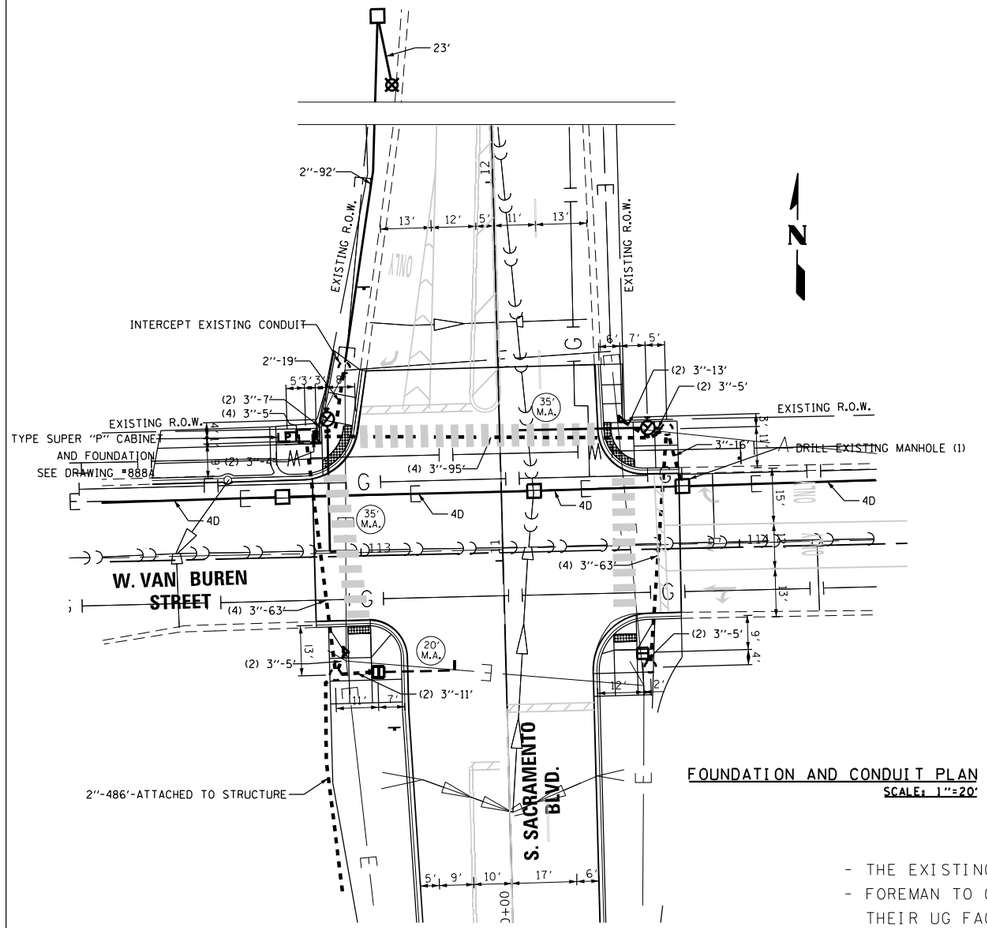

FOUNDATION AND CONDUIT PLAN
SCALE: 1"=20'

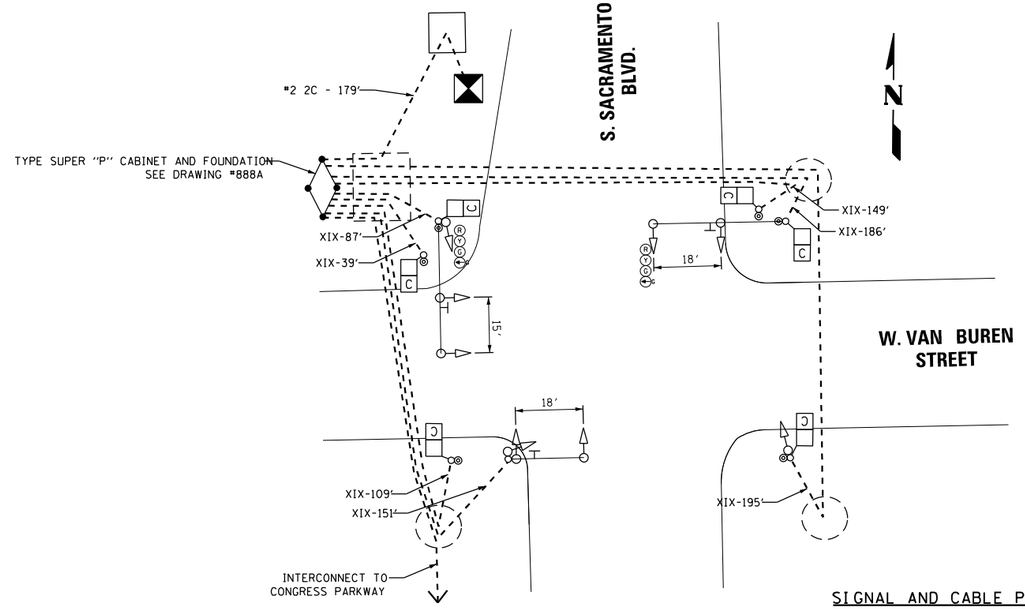

SIGNAL AND CABLE PLAN
NO SCALE

⊣ - DENOTES INSTALL D3-2 STREET NAME SIGN; 5' OFF POLE CENTERLINE
2 EACH - W. VAN BUREN ST
1 EACH - S. SACRAMENTO BLVD

CONSTRUCTION NOTES

- THE EXISTING DOME CAMERA AT THE SE CORNER SHALL BE RELOCATED TO THE NEW MAST ARM.
- FOREMAN TO CALL ALL UG UTILITIES PRIOR TO DIGGING TO DETERMINE THE EXACT LOCATION OF THEIR UG FACILITIES.
- ALL SIGNAL SECTIONS TO BE STANDARD 12" SIZE.
- ALL VEHICULAR SIGNAL HEADS TO BE OF STANDARD LED 3-SECTION UNITS UNLESS OTHERWISE NOTED.
- ALL PEDESTRIAN SIGNAL HEADS TO BE 16" LED 1-SECTION UNITS WITH COUNTDOWN TIMERS, AND TO BE INSTALLED BELOW VEHICULAR SIGNAL WHERE APPLICABLE.
- THIS PROJECT WILL BE PLACED ON PEOPLES GAS WATCH & PROTECT. NOTIFY SYSTEM INTEGRITY OPERATIONS SUPERVISOR AT CENTRAL-SHOP-OUC@PEOPLESGASDELIVERY.COM A MINIMUM OF 5 BUSINESS DAYS PRIOR TO EXCAVATION TO SET UP ON-SITE INSPECTION.
- EXCAVATIONS PROHIBITED WITHIN 50 FEET OF HIGH PRESSURE GAS MAINS UNLESS A REPRESENTATIVE OF THE PIPELINE IS NOTIFIED.
- PEOPLES GAS GAS MAIN IS PRESENT WITHIN AREA OF CONSTRUCTION. USE EXTREME CAUTION NEAR ALL GAS FACILITIES. HAND EXCAVATION IS REQUIRED TO LOCATE AND EXPOSE GAS MAINS PRIOR TO CROSSING AND WORKING WITHIN 5 FEET OF ALL GAS FACILITIES. A MINIMUM OF 3' HORIZONTAL EDGE TO EDGE CLEARANCE AND 18" VERTICAL EDGE TO EDGE CLEARANCE IS REQUIRED FOR HIGH PRESSURE GAS MAINS. CONTRACTOR SHALL NOTIFY CENTRAL-SHOP-OUC@PEOPLESGASDELIVERY.COM A MINIMUM OF 5 BUSINESS DAYS PRIOR TO EXCAVATION TO SET UPON SITE INSPECTION. PEOPLES GAS TO BE ON SITE TO MONITOR CONSTRUCTION ACTIVITIES WHEN WITHIN 5 FEET AND WHENEVER CROSSING HIGH PRESSURE GAS FACILITIES. PIPELINE MARKERS SHALL BE MAINTAINED.

A	
DATE	REVISION

TRAFFIC CONTROL SIGNALS

S. SACRAMENTO BOULEVARD & W. VAN BUREN STREET

CITY OF CHICAGO
DEPARTMENT OF TRANSPORTATION
DIVISION OF ENGINEERING

CONSULTING ENGINEERS:

AMES Engineering, Inc.
CONSULTING ENGINEERS
6330 Belmont Road, Suite 4B
Downers Grove, IL 60516

PROJECT # 10 8

DWG. NO. XXXX

SIZE: 22" X 34" | SCALE: AS NOTED | DATE: 9/12/2025

MODEL: $MODELNAME$
FILE NAME: $FILE$

AMES Engineering, Inc.
CONSULTING ENGINEERS
6330 Belmont Road, Suite 4B
Downers Grove, IL 60516

USER NAME = $USER$	DESIGNED - JR	REVISED -	
	DRAWN - SR	REVISED -	
PLOT SCALE = $SCALE$	CHECKED - JR	REVISED -	
PLOT DATE = $DATE$	DATE - $DATE	REVISED -	

STATE OF ILLINOIS
DEPARTMENT OF TRANSPORTATION

TRAFFIC CONTROL SIGNALS
S. SACRAMENTO BOULEVARD AND W. VAN BUREN STREET
S. SACRAMENTO BOULEVARD AND W. CONGRESS PARKWAY

SCALE: | SHEET OF SHEETS | STA. | TO STA.

F.A.I. RTE.	SECTION	COUNTY	TOTAL SHEETS	SHEET NO.
290	2019-192-B-R	COOK	237	108
		CONTRACT NO. 62K65		
		ILLINOIS	FED. AID PROJECT	

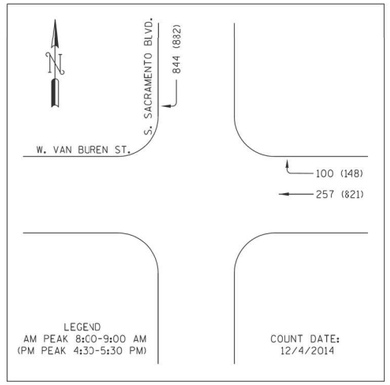

TRAFFIC SIGNAL REQUIREMENTS

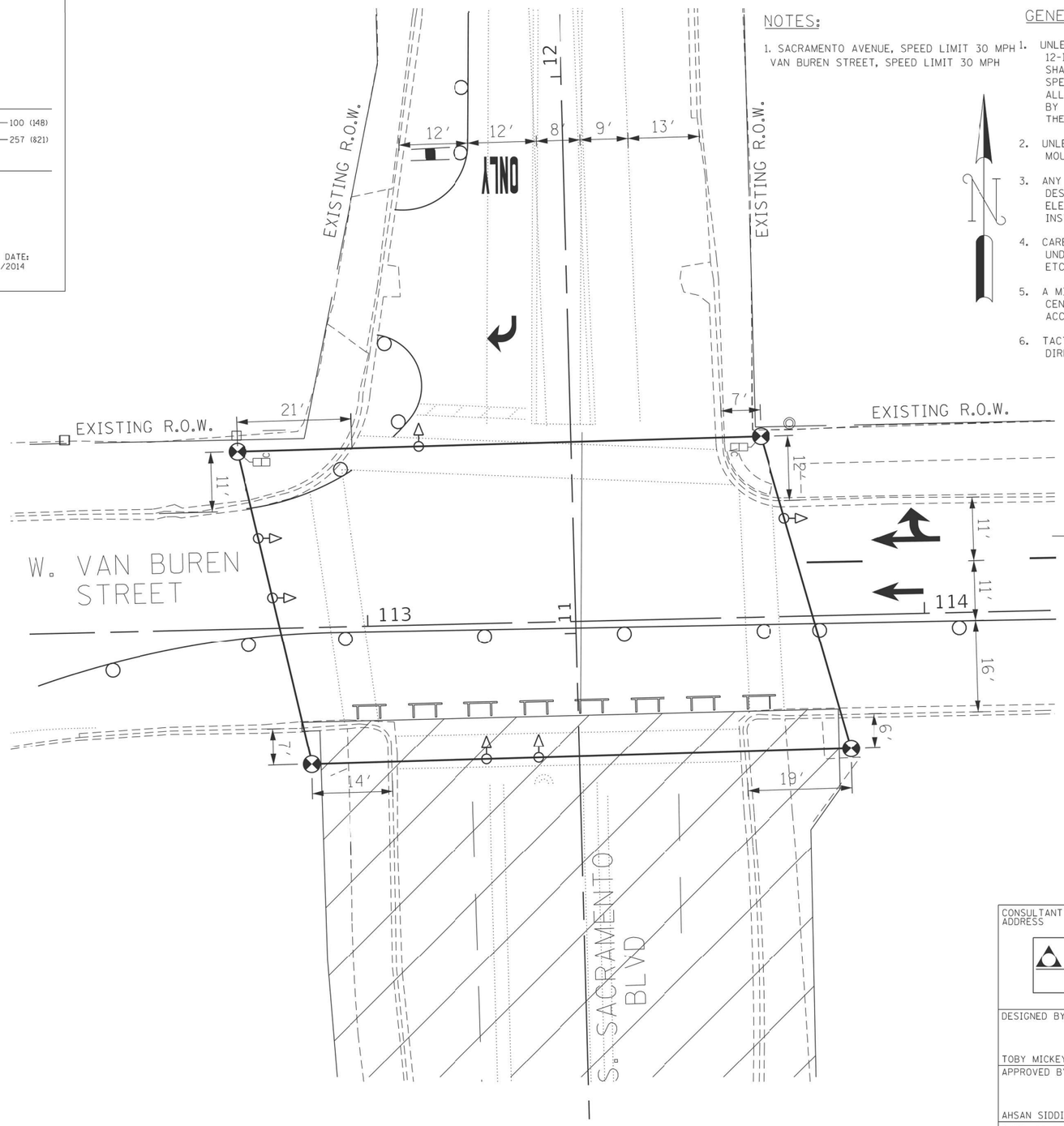

NOTES:

1. SACRAMENTO AVENUE, SPEED LIMIT 30 MPH
   VAN BUREN STREET, SPEED LIMIT 30 MPH

GENERAL NOTES, TRAFFIC SIGNAL REQUIREMENTS

1. UNLESS OTHERWISE NOTED ALL VEHICULAR SIGNALS SHALL BE STANDARD 12-INCH DIA., ADJUSTABLE 3-SECTION UNITS, AND ALL PEDESTRIAN SIGNALS SHALL BE STANDARD 16-INCH, ADJUSTABLE, 1-SECTION UNITS WITH I.T.E.-SPECIFICATION ('HAND-MAN') SYMBOLIC LENSES AND COUNTDOWN TIMERS. ALL OPTICALLY PROGRAMMABLE SHALL BE DENOTED BY AN ASTERISK (*), OR BY THE DESIGNATION "3M", AND SHALL BE AIMED AND PROGRAMMED WITH THE GUIDANCE OF THE DESIGNING TRAFFIC ENGINEER.
2. UNLESS OTHERWISE NOTED, ALL MAST ARMS SHOWN SHALL BE CANTILEVER MOUNTED, TAPERED STEEL, MONOTUBE ARM.
3. ANY SIGNAL MOUNTING SHOWN LABELED IS THE RECOMMENDATION OF THE DESIGNING TRAFFIC ENGINEER, AND SHALL BE FINALIZED BY THE DIVISION OF ELECTRICAL OPERATIONS. ALL SIGNAL HARDWARE SHALL PREFERABLY BE INSTALLED ON THE SIDE OF POLE/PEDESTAL AWAY FROM THE TRAVELED WAY.
4. CARE SHALL BE TAKEN DURING CONSTRUCTION TO ACCOMMODATE ANY UNDERGROUND STRUCTURES ENCOUNTERED (VAULTS, MANHOLES, CONDUITS, ETC.).
5. A MINIMUM DISTANCE OF 3 FEET FROM CURB FACE TO POLE/PEDESTAL CENTERLINE IS DESIRABLE, BUT MAY BE CHANGED FOR THE ABOVE MENTIONED ACCOMMODATION, UPON CONSULTING WITH THE DESIGNING TRAFFIC ENGINEER.
6. TACTILE ARROW FOR APS PUSHBUTTONS SHALL BE ALIGNED PARALLEL TO THE DIRECTION OF TRAVEL ON THE ASSOCIATED CROSSWALK.

LEGEND

- PROPOSED TRAFFIC SIGNAL HEAD
- PROPOSED COUNTDOWN PEDESTRIAN SIGNAL
- PROPOSED TRAFFIC SIGNAL POLE OR POST
- PROPOSED TRAFFIC SIGNAL MAST ARM
- TEMPORARY WOOD POLE

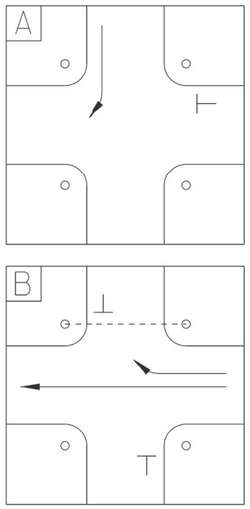

CONSULTANT FIRM NAME/ ADDRESS AMES Engineering, Inc. CONSULTING ENGINEERS 6330 Belmont Road, Suite 4B Downers Grove, IL 60516	CITY OF CHICAGO DEPARTMENT OF TRANSFORTATION DIVISION OF TRAFFIC SAFETY
	TRAFFIC SIGNAL REQUIREMENT PLAN
	S. SACRAMENTO BLVD. AT W. VAN BUREN STREET - STAGES I AND II
DESIGNED BY: TOBY MICKEY	REVIEWED BY: TRAFFIC ENGINEER
APPROVED BY: AHSAN SIDDIQI	APPROVED BY: TRAFFIC ENGINEER
DATE: 08-01-2025	DATE: SCALE: 1"=20' SHEET 1 OF 1

MODEL: Default
FILE NAME: F:\Projects\1058-Eisenhower IDOT-Collins\Design\Shr\Traffic Signal\Sacramento\TS 12 MOT TSR - Sacramento and Van Buren.dgn

AMES Engineering, Inc.
CONSULTING ENGINEERS
6330 Belmont Road, Suite 4B
Downers Grove, IL 60516

USER NAME = Srahman	DESIGNED - JR	REVISED -
	DRAWN - SR	REVISED -
PLOT SCALE = 39.998 ' / In.	CHECKED - JR	REVISED -
PLOT DATE = 9/9/2025	DATE - $DATE	REVISED -

STATE OF ILLINOIS
DEPARTMENT OF TRANSPORTATION

TRAFFIC CONTROL SIGNALS
S. SACRAMENTO BOULEVARD AND W. VAN BUREN STREET
S. SACRAMENTO BOULEVARD AND W. CONGRESS PARKWAY

SCALE: | SHEET OF SHEETS | STA. | TO STA.

F.A.I. RTE.	SECTION	COUNTY	TOTAL SHEETS	SHEET NO.
290	2019-192-B-R	COOK	237	109
		CONTRACT NO. 62K65		
	ILLINOIS	FED. AID PROJECT		

DIAL	CYCLE LENGTH	OFFSET	TIMES OF OPERATION	FLASH OPERATION
1	100"	0"	ALL OTHER TIMES	R02, R04, R08.
2	100"	0"	6:00 TO 10:00 AM MONDAY - FRIDAY	WALK/DON'T WALK OFF
3	100"	0"	3:00 TO 7:00 PM MONDAY - FRIDAY	

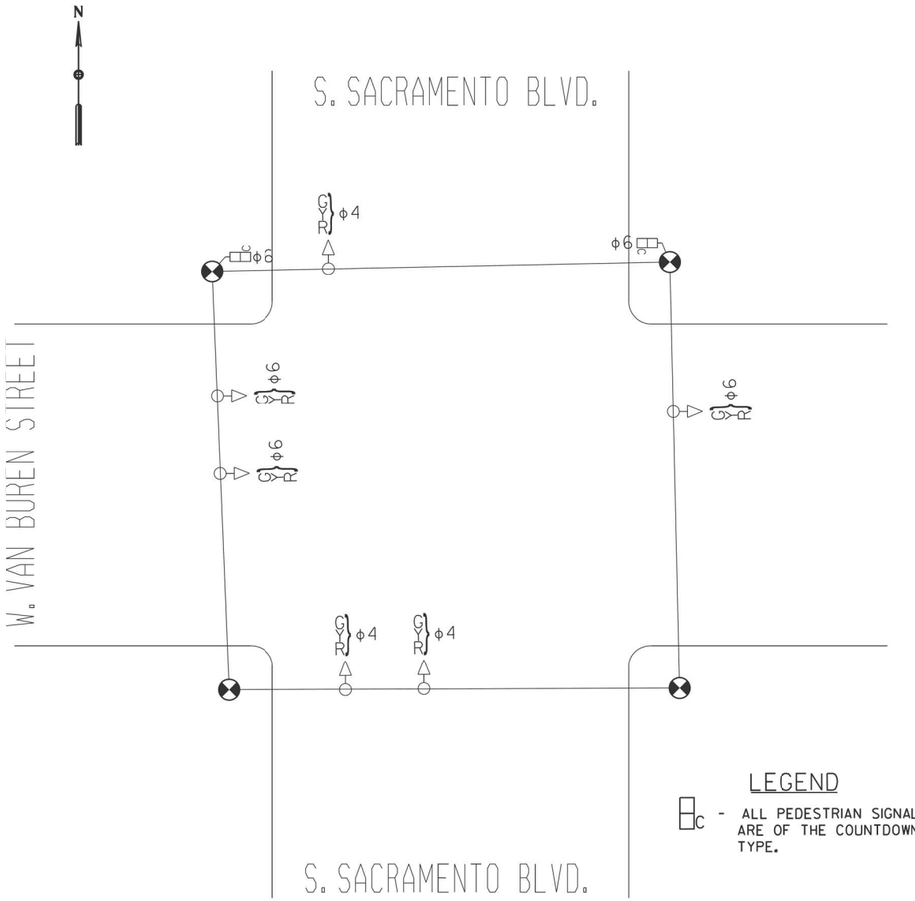

LEGEND

Hc - ALL PEDESTRIAN SIGNALS ARE OF THE COUNTDOWN TYPE.

S. SACRAMENTO BLVD. AND W. VAN BUREN STREET
STAGES 1 AND 2

DIAL 1

	PHASE							
PHASE NUMBER	1	2	3	4	5	6	7	8
DIRECTION	WBLT	EB	NBLT	SB	EBLT	WB	SBLT	NB
MINIMUM GREEN								
VEHICLE EXTENSION								
MAX GREEN (MAX 1)				26		56		
YELLOW CHANGE				3		3		
RED CLEARANCE				1		1		
WALK						45		
PED CLEARANCE						11		
SPLITS				30		60		
COORDINATED PHASE								

DIAL 2

	PHASE							
PHASE NUMBER	1	2	3	4	5	6	7	8
DIRECTION	WBLT	EB	NBLT	SB	EBLT	WB	SBLT	NB
MINIMUM GREEN								
VEHICLE EXTENSION								
MAX GREEN (MAX 1)				26		56		
YELLOW CHANGE				3		3		
RED CLEARANCE				1		1		
WALK						45		
PED CLEARANCE						11		
SPLITS				30		60		
COORDINATED PHASE								

DIAL 3

	PHASE							
PHASE NUMBER	1	2	3	4	5	6	7	8
DIRECTION	WBLT	EB	NBLT	SB	EBLT	WB	SBLT	NB
MINIMUM GREEN								
VEHICLE EXTENSION								
MAX GREEN (MAX 1)				26		56		
YELLOW CHANGE				3		3		
RED CLEARANCE				1		1		
WALK						45		
PED CLEARANCE						11		
SPLITS				30		60		
COORDINATED PHASE								

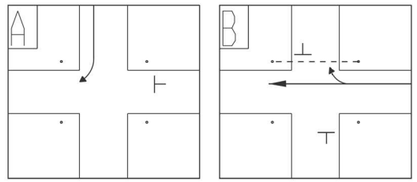

CITY OF CHICAGO
DEPARTMENT OF TRANSPORTATION

S. SACRAMENTO BLVD. & W. VAN BUREN ST.

TRAFFIC SIGNAL TIMING SCHEDULE

DESIGNED BY: TCM
DATE: 2025/08/06
CHECKED BY: AS
DATE: 2015/08/06

APPROVED:
TRAFFIC ENGINEER:

PAGE 1 OF 1

SENT: INSTALLED:

CONTROLLER SEQUENCE

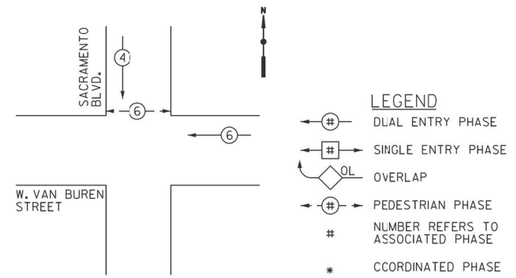

MODEL: Default
FILE NAME: F:\Projects\1058\Eisenhower IDOT-Collins\Design\Shit\Traffic Signals\Sacramento\TS 13 TMP Timing Plans • Sacramento and Van Buren.dgn

AMES Engineering, Inc.
CONSULTING ENGINEERS
6330 Belmont Road, Suite 4B
Downers Grove, IL 60516

USER NAME = Srahman	DESIGNED - JR	REVISED -	
	DRAWN - SR	REVISED -	
PLOT SCALE = 39.998 ' / In.	CHECKED - JR	REVISED -	
PLOT DATE = 9/9/2025	DATE - $DATE	REVISED -	

STATE OF ILLINOIS
DEPARTMENT OF TRANSPORTATION

TRAFFIC CONTROL SIGNALS
S. SACRAMENTO BOULEVARD AND W. VAN BUREN STREET
S. SACRAMENTO BOULEVARD AND W. CONGRESS PARKWAY

SCALE: | SHEET OF SHEETS | STA. | TO STA.

F.A.I. RTE.	SECTION	COUNTY	TOTAL SHEETS	SHEET NO.
290	2019-192-B-R	COOK	237	110
		CONTRACT NO. 62K65		
	ILLINOIS	FED. AID PROJECT		

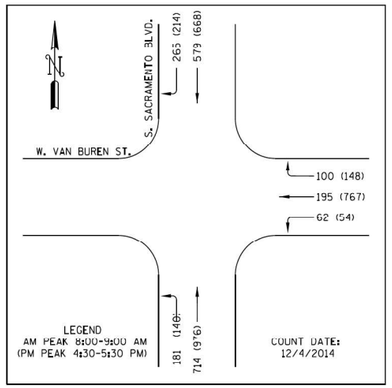

TRAFFIC SIGNAL REQUIREMENTS

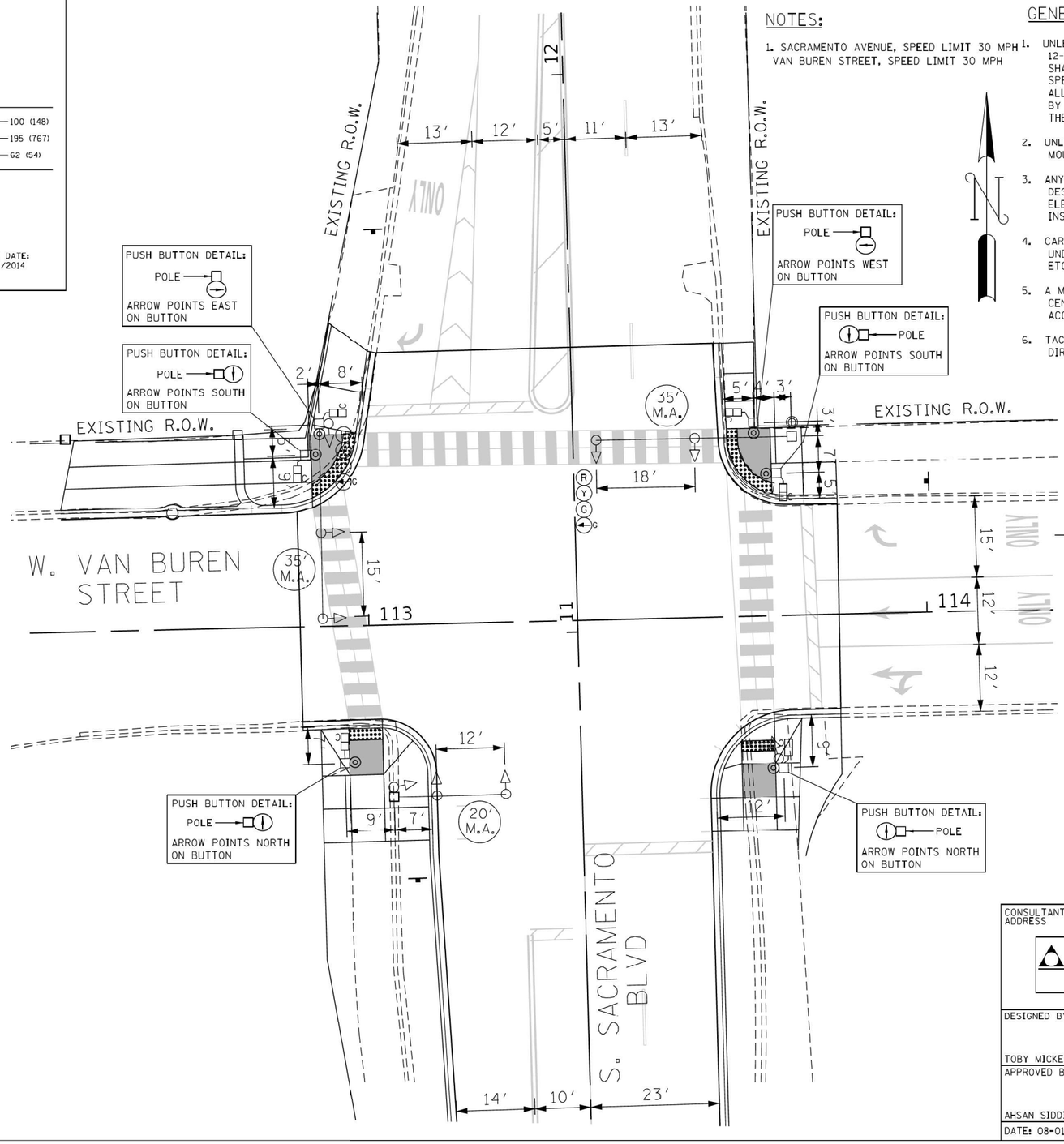

NOTES:

1. SACRAMENTO AVENUE, SPEED LIMIT 30 MPH
   VAN BUREN STREET, SPEED LIMIT 30 MPH

GENERAL NOTES, TRAFFIC SIGNAL REQUIREMENTS

1. UNLESS OTHERWISE NOTED ALL VEHICULAR SIGNALS SHALL BE STANDARD 12-INCH DIA., ADJUSTABLE 3-SECTION UNITS, AND ALL PEDESTRIAN SIGNALS SHALL BE STANDARD 16-INCH, ADJUSTABLE, 1-SECTION UNITS WITH I.T.E.-SPECIFICATION ('HAND-MAN') SYMBOLIC LENSES AND COUNTDOWN TIMERS. ALL OPTICALLY PROGRAMMABLE SHALL BE DENOTED BY AN ASTERISK (*), OR BY THE DESIGNATION "3M", AND SHALL BE AIMED AND PROGRAMMED WITH THE GUIDANCE OF THE DESIGNING TRAFFIC ENGINEER.
2. UNLESS OTHERWISE NOTED, ALL MAST ARMS SHOWN SHALL BE CANTILEVER MOUNTED, TAPERED STEEL, MONOTUBE ARM.
3. ANY SIGNAL MOUNTING SHOWN LABELED IS THE RECOMMENDATION OF THE DESIGNING TRAFFIC ENGINEER, AND SHALL BE FINALIZED BY THE DIVISION OF ELECTRICAL OPERATIONS. ALL SIGNAL HARDWARE SHALL PREFERABLY BE INSTALLED ON THE SIDE OF POLE/PEDESTAL AWAY FROM THE TRAVELED WAY.
4. CARE SHALL BE TAKEN DURING CONSTRUCTION TO ACCOMMODATE ANY UNDERGROUND STRUCTURES ENCOUNTERED (VAULTS, MANHOLES, CONDUITS, ETC.).
5. A MINIMUM DISTANCE OF 3 FEET FROM CURB FACE TO POLE/PEDESTAL CENTERLINE IS DESIRABLE, BUT MAY BE CHANGED FOR THE ABOVE MENTIONED ACCOMMODATION, UPON CONSULTING WITH THE DESIGNING TRAFFIC ENGINEER.
6. TACTILE ARROW FOR APS PUSHBUTTONS SHALL BE ALIGNED PARALLEL TO THE DIRECTION OF TRAVEL ON THE ASSOCIATED CROSSWALK.

LEGEND

- PROPOSED TRAFFIC SIGNAL HEAD
- PROPOSED COUNTDOWN PEDESTRIAN SIGNAL
- PROPOSED TRAFFIC SIGNAL POLE OR POST
- PROPOSED TRAFFIC SIGNAL MAST ARM
- PROPOSED ADA LEVEL LANDING AREA
- PROPOSED APS PUSHBUTTON
- PROPOSED APS PUSHBUTTON SHORT POST

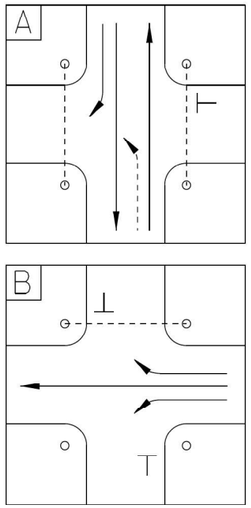

CONSULTANT FIRM NAME/ ADDRESS AMES Engineering, Inc. CONSULTING ENGINEERS 6330 Belmont Road, Suite 4B Downers Grove, IL 60516	CITY OF CHICAGO DEPARTMENT OF TRANSPORTATION DIVISION OF TRAFFIC SAFETY
	TRAFFIC SIGNAL REQUIREMENT PLAN
	S. SACRAMENTO BLVD. AT W. VAN BUREN STREET
DESIGNED BY: TOBY MICKEY	REVIEWED BY: TRAFFIC ENGINEER
APPROVED BY: AHSAN SIDDIQI	APPROVED BY: TRAFFIC ENGINEER
DATE: 08-01-2025	DATE: SCALE: 1"=20' SHEET 1 OF 1

MODEL: Default
FILE NAME: P:\Projects\1058-Eisenhower EDOT-Collins\Design\Sht\Traffic Signals\Sacramento\TS 14 Permanent TSR - Sacramento and Van Buren.dgn

AMES Engineering, Inc. CONSULTING ENGINEERS 6330 Belmont Road, Suite 4B Downers Grove, IL 60516	USER NAME = tmickey	DESIGNED - JR	REVISED -	STATE OF ILLINOIS DEPARTMENT OF TRANSPORTATION	TRAFFIC CONTROL SIGNALS S. SACRAMENTO BOULEVARD AND W. VAN BUREN STREET S. SACRAMENTO BOULEVARD AND W. CONGRESS PARKWAY
		DRAWN - SR	REVISED -		
	PLOT SCALE = 39.998 ' / in.	CHECKED - JR	REVISED -		SCALE: SHEET OF SHEETS STA. TO STA.
	PLOT DATE = 9/9/2025	DATE - $DATE	REVISED -		

F.A.I. RTE.	SECTION	COUNTY	TOTAL SHEETS	SHEET NO.
290	2019-192-B-R	COOK	237	111
		CONTRACT NO. 62K65		
		ILLINOIS	FED. AID PROJECT	

DIAL	CYCLE LENGTH	OFFSET	TIMES OF OPERATION	FLASH OPERATION
1	100"	0"	ALL OTHER TIMES	RØ2, RØ4, RØ8.
2	100"	0"	6:00 TO 10:00 AM MONDAY - FRIDAY	WALK/DON'T WALK OFF
3	100"	0"	3:00 TO 7:00 PM MONDAY - FRIDAY	

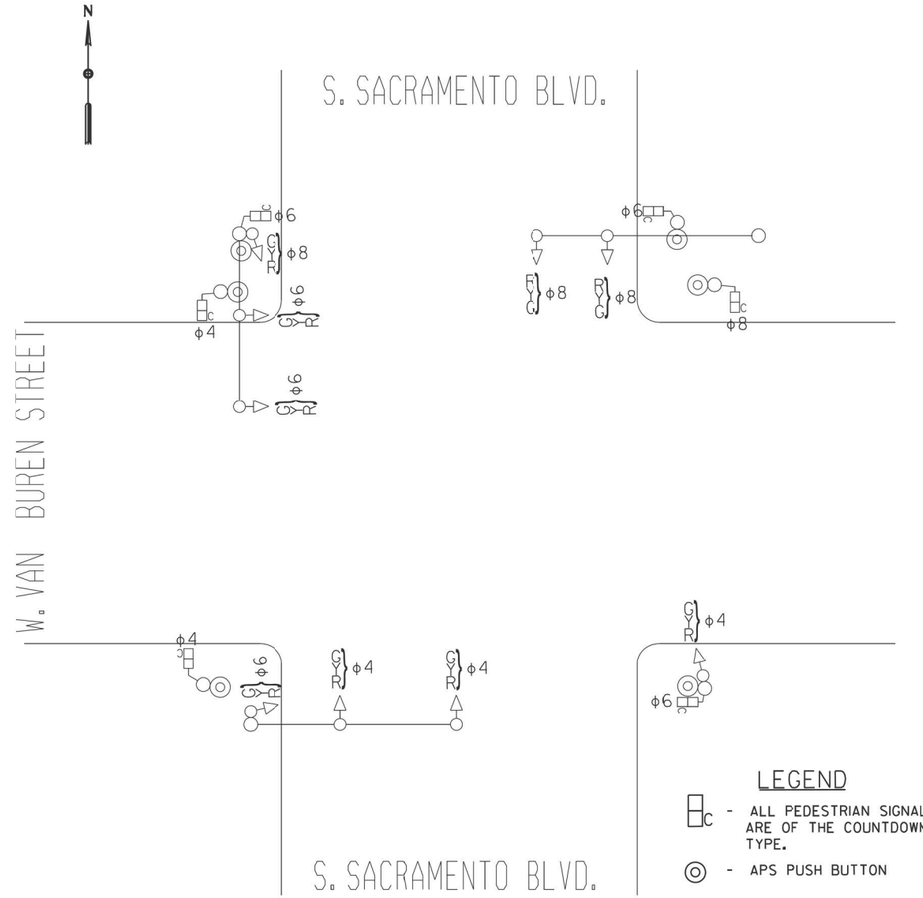

S. SACRAMENTO BLVD. AND W. VAN BUREN STREET

DIAL 1

	PHASE							
PHASE NUMBER	1	2	3	4	5	6	7	8
DIRECTION	WBLT	EB	NBLT	SB	EBLT	WB	SBLT	NB
MINIMUM GREEN								
VEHICLE EXTENSION								
MAX GREEN (MAX 1)	56			26		56		26
YELLOW CHANGE	3			3		3		3
RED CLEARANCE	1			1		1		1
WALK				15		45		15
PED CLEARANCE				11		11		11
SPLITS	60			30		60		30
COORDINATED PHASE								

DIAL 2

	PHASE							
PHASE NUMBER	1	2	3	4	5	6	7	8
DIRECTION	WBLT	EB	NBLT	SB	EBLT	WB	SBLT	NB
MINIMUM GREEN								
VEHICLE EXTENSION								
MAX GREEN (MAX 1)	56			26		56		26
YELLOW CHANGE	3			3		3		3
RED CLEARANCE	1			1		1		1
WALK				15		45		15
PED CLEARANCE				11		11		11
SPLITS	60			30		60		30
COORDINATED PHASE								

DIAL 3

	PHASE							
PHASE NUMBER	1	2	3	4	5	6	7	8
DIRECTION	WBLT	EB	NBLT	SB	EBLT	WB	SBLT	NB
MINIMUM GREEN								
VEHICLE EXTENSION								
MAX GREEN (MAX 1)	56			26		56		26
YELLOW CHANGE	3			3		3		3
RED CLEARANCE	1			1		1		1
WALK				15		45		15
PED CLEARANCE				11		11		11
SPLITS	60			30		60		30
COORDINATED PHASE								

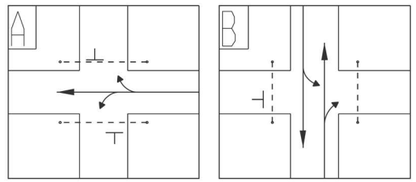

CITY OF CHICAGO
DEPARTMENT OF TRANSPORTATION

S. SACRAMENTO BLVD. & W. VAN BUREN ST.

TRAFFIC SIGNAL TIMING SCHEDULE

DESIGNED BY: TCM
DATE: 2025/08/06
CHECKED BY: AS
DATE: 2015/08/06
APPROVED:
TRAFFIC ENGINEER:
PAGE 1 OF 1

SENT: INSTALLED:

CONTROLLER SEQUENCE

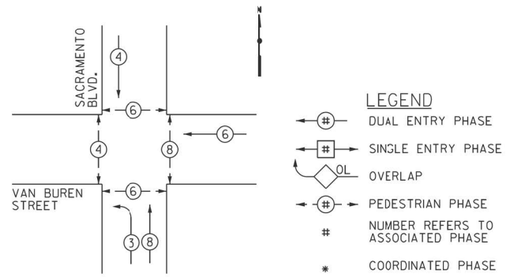

MODEL: Default
FILE NAME: F:\Projects\1058-Eisenhower IDOT-Collins Design\Shift\Traffic Signals\Sacramento\TS 15 Permanent Timing Plans - Sacramento and Van Buren.dgn

AMES Engineering, Inc.
CONSULTING ENGINEERS
6330 Belmont Road, Suite 4B
Downers Grove, IL 60516

USER NAME = Srahman	DESIGNED - JR	REVISED -	STATE OF ILLINOIS DEPARTMENT OF TRANSPORTATION	TRAFFIC CONTROL SIGNALS S. SACRAMENTO BOULEVARD AND W. VAN BUREN STREET S. SACRAMENTO BOULEVARD AND W. CONGRESS PARKWAY
	DRAWN - SR	REVISED -		
PLOT SCALE = 39.998 ' / In.	CHECKED - JR	REVISED -		
PLOT DATE = 9/9/2025	DATE - $DATE	REVISED -		SCALE: SHEET OF SHEETS STA. TO STA.

F.A.I. RTE.	SECTION	COUNTY	TOTAL SHEETS	SHEET NO.
290	2019-192-B-R	COOK	237	112
		CONTRACT NO. 62K65		
	ILLINOIS	FED. AID PROJECT		

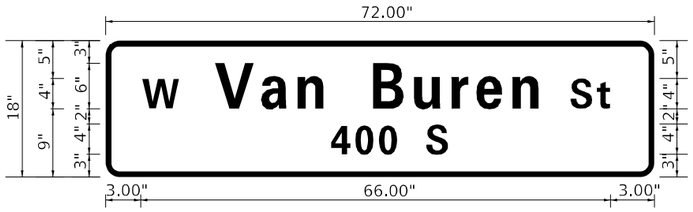

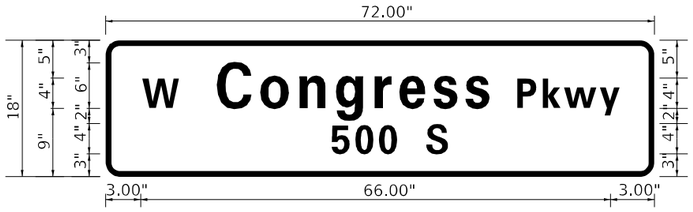

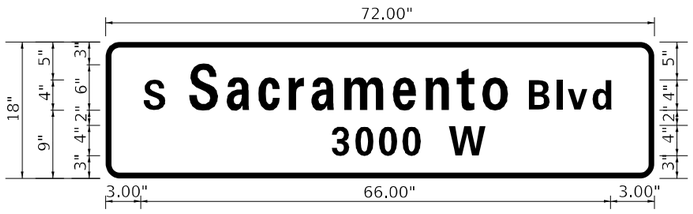

A	
DATE	REVISION

MAST ARM MOUNTED STREET NAME SIGNS

S. PAULINA STREET &
W. VAN BUREN STREET

CITY OF CHICAGO
DEPARTMENT OF TRANSPORTATION
DIVISION OF ENGINEERING

CONSULTING ENGINEERS:

AMES Engineering, Inc.
CONSULTING ENGINEERS
6330 Belmont Road, Suite 4B
Downers Grove, IL 60516

PROJECT # 1058

DWG. NO.
XXXX

SIZE: 22" X 34" | SCALE: AS NOTED | DATE: 9/8/2025

AMES Engineering, Inc.
CONSULTING ENGINEERS
6330 Belmont Road, Suite 4B
Downers Grove, IL 60516

USER NAME = tmickey	DESIGNED - TM	REVISED -	
	DRAWN - SR	REVISED -	
PLOT SCALE = 39.9984 ' / in.	CHECKED - AS	REVISED -	
PLOT DATE = 11/5/2025	DATE - $DATE	REVISED -	

STATE OF ILLINOIS
DEPARTMENT OF TRANSPORTATION

TRAFFIC CONTROL SIGNALS
S. PAULINA STREET AND W. VAN BUREN STREET
S. PAULINA STREET AND W. CONGRESS PARKWAY

SCALE: | SHEET OF SHEETS | STA. TO STA.

F.A.I. RTE.	SECTION	COUNTY	TOTAL SHEETS	SHEET NO.
290	2019-191-B-R	COOK	237	112A
		CONTRACT NO. 62K64		
	ILLINOIS	FED. AID PROJECT		

MODEL: Default
FILE NAME: F:\Projects\1058-Eisenhower IDOT-Collins\Design\Sht\Traffic Signals\Sacramento\TS 06 TS STN - Sacramento.dgn

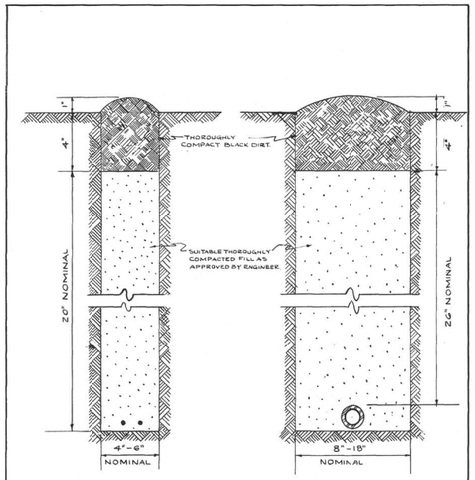

CABLE TRENCH

CONDUIT TRENCH

NOTE

EXCESS SOIL FROM TRENCH TO BE COMPLETELY REMOVED FROM SITE AS SOON AS PRACTICABLE.

BLACK DIRT TO BE TAMPED & THOROUGHLY COMPACTED AS SHOWN.

STANDARD METHOD FOR BACKFILLING CABLE & CONDUIT TRENCHES IN SODDED PARKWAY & LAWNS

REVISION	CITY OF CHICAGO	DRAWN	CHECKED	ENGINEER
	DEPT. OF STREETS & SANITATION DIVISION OF ELECTRICAL ENGINEERING	W. E. HAEP	M. J. O'CONNOR	
	ENGIN CHARGE	DSGD.	DKG. NO.	
	SUPT. OF CONST.		579	
	DRAFTSMAN	CHECKED		
	SIZE 8½"x14"	SCALE N	DATE: 7-14-61	

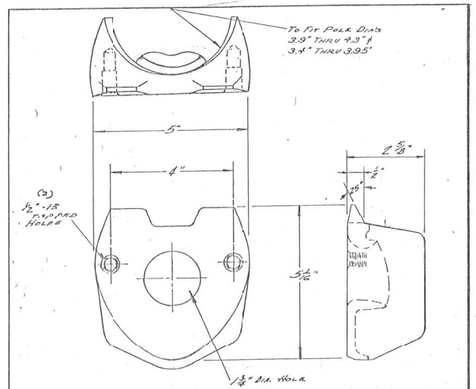

MATERIAL: CAST STEEL

REVISED		DRAWN	CHECKED	BUSINESS
A	3-27-76	W. KENSFIELDT	J. DORE	J. DORE
B				DWG. NO.
C				659
D				
E				
F				
G		SIZE 8½"x14"	SCALE	DATE 10-25-66

A 3.0°C. MATERIAL NOTE ADDED.

2 BOLT MAST ARM ATTACHMENT POLE PLATE DETAILS

CITY OF CHICAGO
DEPT. OF STREETS AND SANITATION
DIVISION OF ELECTRICAL ENGINEERING

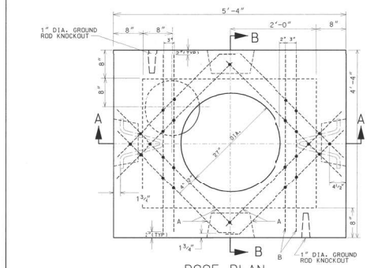

ROOF PLAN

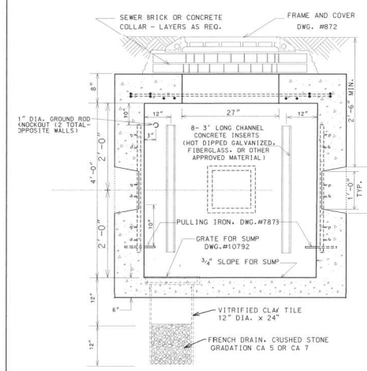

SECTION A-A

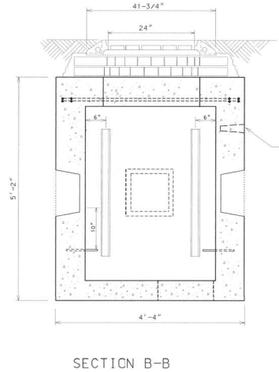

SECTION B-B

EXCAVATION (CONSTRUCTION INFORMATION)

COMPLETE MANHOLE	6.0 CU. YDS.
NEW ROOF ONLY	2.0 CU. YDS
SHEETING MANHOLE 150.0 SQ. FT.	

#5 REINFORCING BARS

BAR	LENGTH	NO. OF RODS	TOTAL FT.
A	3'-4"	4	13'-4"
B	4'-0"	10	40'-0"

MATERIALS FOR ROOF ONLY

CONCRETE	0.45 CU. YDS.
REINFORCING BARS #5	54'

DRG.	MATERIAL	CODE	SIZE	No. Req'd
	FORM FOR MANHOLE	11-4674-6000 11-4648-5320	5x6x6	1
	CONDUIT END BELL		AS REQ.	
	TILE, SEWER	39-4038-3200	12"/24"	1
	SLAB BOLSTER		2"	20'
	BAR, REINFORCING	20-5472-9650	⅝" ø	54
	TIE WIRE	13-9938-6106	#20GA.	35'
7878	PULLING IRON	02-4483-6970	¾" ø	2
	CONCRETE	05-3267-2940	3 CU. YDS	
	SEWER BRICK	05-1452-9720	STD.	50
10792	GRATE FOR SUMP	02-4368-1100	15" ø	1
	GROUND ROD	09-7796-8000	¾"x10'	1
	GROUND ROD CLAMP	09-2636-3240	¾"	1
	CRUSHED STONE	05-9057-5471	¾"	1 CU. YARD
872	MANHOLE FRAME	02-4299-5524	24"	1
872	MANHOLE COVER	02-4574-5040	24"	1
	CONC. CHANNEL INSERT	02-4574-5040	3'	8

NOTES:
1. PRECAST MANHOLES MUST BE PROVIDED WITH CHANNEL INSERTS, PULLING IRONS, AND CONDUIT KNOCK-OUTS.
2. ALL CONCRETE MUST BE PORTLAND CEMENT CONCRETE MEETING IDOT REQUIREMENTS FOR CLASS PC CONCRETE FOR PRE-CAST STRUCTURES, OR CLASS SI CONCRETE FOR CAST-IN-PLACE STRUCTURES.
3. REINFORCING BARS MUST MEET ASTM A615 GRADE 60.

DATE	REVISION
8/21/02	SUPERCEDES DWG. 730 DATED JAN 12. 1996
1/12/96	SUPERCEDES DWG. 730 DATED NOV. 21, 1973

3' x 4' x 4'
CONCRETE MANHOLE
WITH 24" FRAME AND COVER

CITY OF CHICAGO
DEPT. OF STREETS AND SANITATION
DIVISION OF ELECTRICAL ENGINEERING
BUREAU OF ELECTRICITY

DRAFTSMAN: D. GARNSEY	T. CARTER	ENGINEER: B. GARNSEY
ELECTRICAL DESIGN ENGINEER		DRAWING NO.
ENGINEER OF ELECTRICITY		730
GENERAL SUPERINTENDENT		
DEPUTY COMMISSIONER		
SIZE: 17" x 22"	SCALE: NONE	DATE: 8/21/02

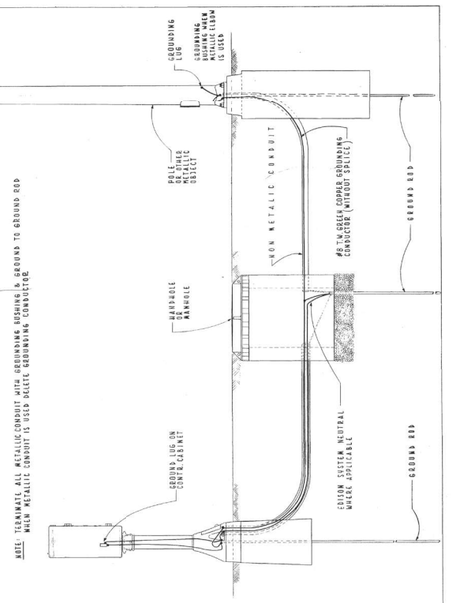

NOTE: THE MINIMUM ALL METALLIC CONDUIT WITH GROUNDING BUSHING & GROUND TO GROUND ROD MAIN METALLIC CONDUIT TO WATER PIPE GROUNDING CONNECTION

TYPICAL GROUNDING METHODS FOR BUREAU OF ELECTRICITY EQUIPMENT

CITY OF CHICAGO
DEPT. OF STREETS & SANITATION
BUREAU OF ELECTRICITY
DIVISION OF ELEC. ENGINEERING

REVISED	DRAWN: E. GERULIS	CHECKED: M. SHANE	ENGINEER: J. DESIMONE
A	DSG. BY:		DWG. NO.
B	CHIEF ENGINEER:		736
C	SUPT. OF ELECTRICITY:		
D	DEPUTY COMMISSIONER:		
E			
F	SIZE: 8½"x14"	SCALE: 1" = 10'	DATE: 5-14-74

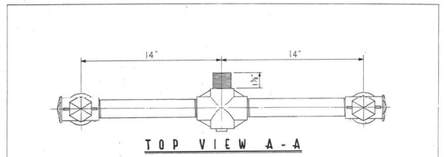

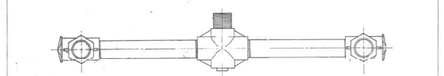

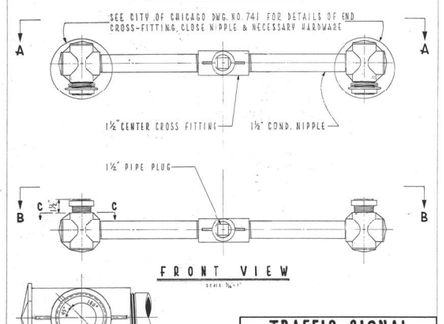

TRAFFIC SIGNAL UPPER & LOWER BRACKET ARM ASSEMBLY

CITY OF CHICAGO
DEPT. OF STREETS & SANITATION
BUREAU OF ELECTRICITY
DIVISION OF ELEC. ENGINEERING

REVISED	DRAWN: E. GERULIS	CHECKED: DC / M.R.	ENGINEER: L. CUCCI
A 1-23-1981	DSG. BY:		DWG. NO.
B	CHIEF ENGINEER:		740
C	SUPT. OF ELECTRICITY:		
D	DEPUTY COMMISSIONER:		
E			
F	SIZE:	SCALE: AS NOTED	DATE: 8-21-74

CHANGE TYPE TA CONDUCT TO CENTER CROSS & DELETE CENTER CONDUIT

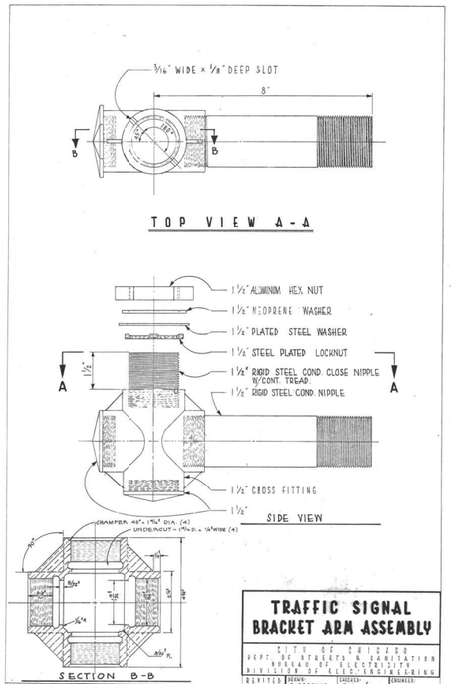

DELETE SET SCREWS
ADDED SECTION B-B

TRAFFIC SIGNAL BRACKET ARM ASSEMBLY

CITY OF CHICAGO
DEPT. OF STREETS & SANITATION
BUREAU OF ELECTRICITY
DIVISION OF ELEC. ENGINEERING

REVISED	DRAWN: E. GERULIS	CHECKED: DC / M.R.	ENGINEER: L. CUCCI
A 1-23-81	DSG. BY:		DWG. NO.
B 12-6-00	CHIEF ENGINEER:		741
C	SUPT. OF ELECTRICITY:		
D	DEPUTY COMMISSIONER:		
E			
F	SIZE:	SCALE: 1½" = 1"	DATE: 8-21-74

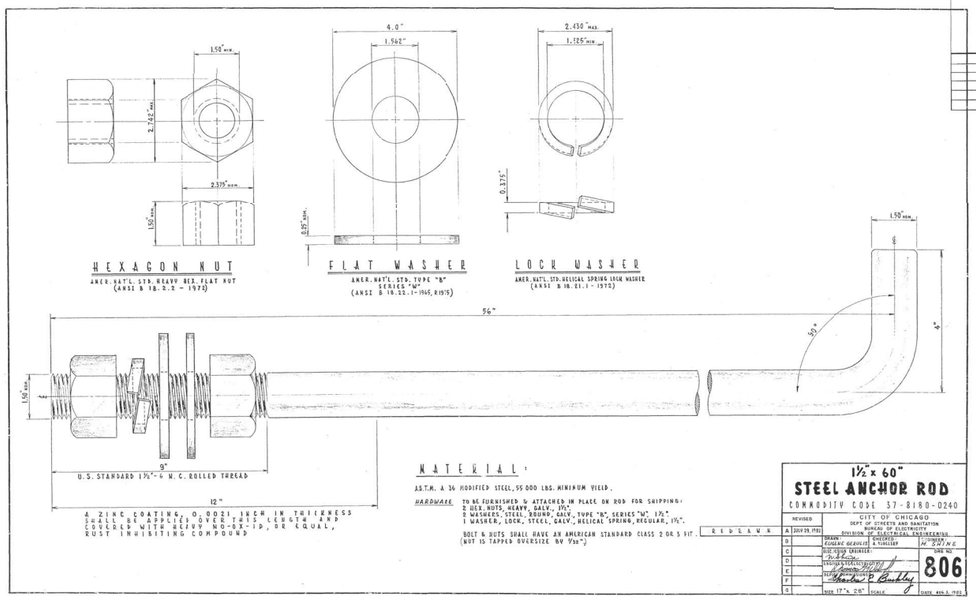

MATERIAL:

ASTM. A 36 MODIFIED: STEEL, 55 000 LBS. MINIMUM YIELD.

HARDWARE: TO BE FURNISHED & ATTACHED IN PLACE OR ROD FOR SHIPPING:
2 HEX NUTS, HEAVY, GALV., (1)
2 WASHERS, STEEL ROUND, GALV., TYPE "B," SERIES "W," 1½".
1 WASHER, LOCK, STEEL, GALV., HELICAL SPRING, REGULAR, 1½".

BOLT & NUTS SHALL HAVE AN AMERICAN STANDARD CLASS 2 OR 3 FIT. (NUT IS TAPPED OVERSIZE BY 1/16")

1½" x 60"
STEEL ANCHOR ROD
COMMODITY CODE 37-8180-0240

REVISED	CITY OF CHICAGO DEPT OF STREETS AND SANITATION DIVISION OF ELECTRICAL ENGINEERING		
A (MAY 29, 1981)	DRAWN: EUGENE GERULIS	CHECKED: M. SHANE	ENGINEER: M. SHANE
B	DSG. BY:		DWG. NO.
C	CHIEF ENGINEER:		806
D	SUPT. OF ELECTRICITY:		
E	DEPUTY COMMISSIONER:		
F	SIZE: 17"x 26"	SCALE:	DATE: AUG. 3, 1982

A	
DATE	REVISION

BUREAU OF ELECTRICITY
STANDARD DRAWINGS

CITY OF CHICAGO
DEPARTMENT OF TRANSPORTATION
DIVISION OF ENGINEERING

CONSULTING ENGINEERS:

AMES Engineering, Inc.
CONSULTING ENGINEERS
6330 Belmont Road, Suite 4B
Downers Grove, IL 60516

DWG. NO.

PROJECT # 10 8

SIZE: 22" X 34" | SCALE: AS NOTED | DATE: 9/12/2025

MODEL: Default
FILE NAME: F:\Projects\10584\Eisenhower IDOT-Collins\Design\Sht\Traffic Signal\Sacramento\TS 16 - CDOT DTL1.dgn

AMES Engineering, Inc.
CONSULTING ENGINEERS
6330 Belmont Road, Suite 4B
Downers Grove, IL 60516

USER NAME = Srahman	DESIGNED - JR	REVISED -	
	DRAWN - SR	REVISED -	
PLOT SCALE = 39.9985 ' / In.	CHECKED - JR	REVISED -	
PLOT DATE = 9/9/2025	DATE - $DATE	REVISED -	

STATE OF ILLINOIS
DEPARTMENT OF TRANSPORTATION

TRAFFIC CONTROL SIGNALS
S. SACRAMENTO BOULEVARD AND W. VAN BUREN STREET
S. SACRAMENTO BOULEVARD AND W. CONGRESS PARKWAY

SCALE: | SHEET OF SHEETS | STA. TO STA.

F.A.I. RTE.	SECTION	COUNTY	TOTAL SHEETS	SHEET NO.
290	2019-192-B-R	COOK	237	113
		CONTRACT NO. 62K65		
	ILLINOIS FED. AID PROJECT			

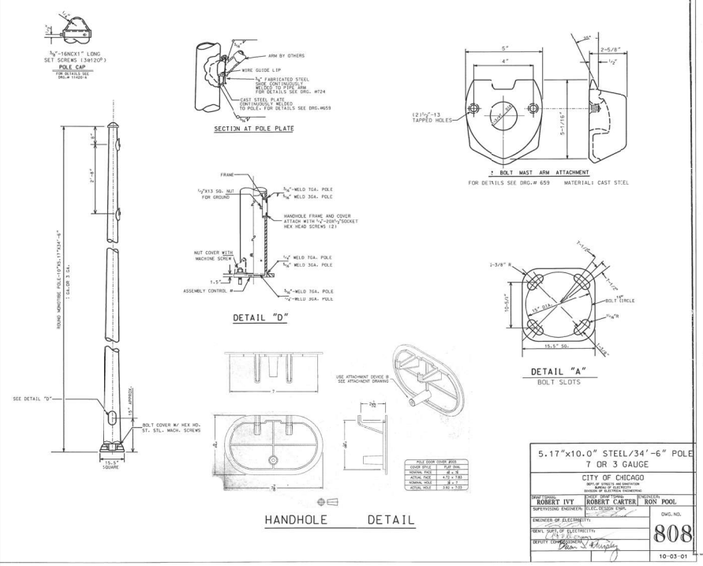

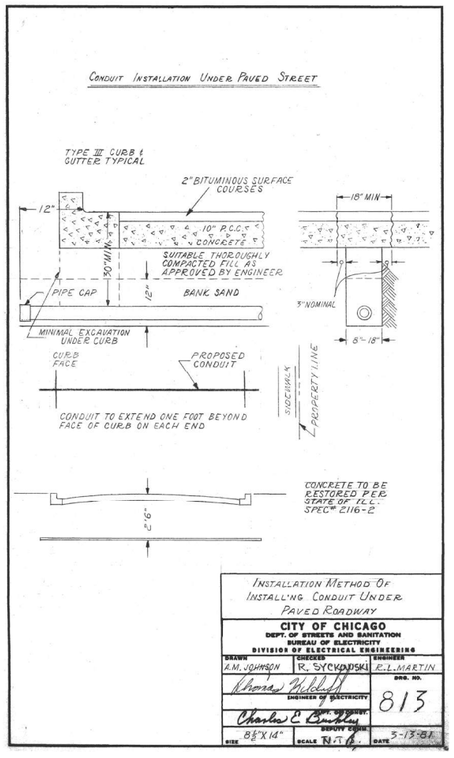

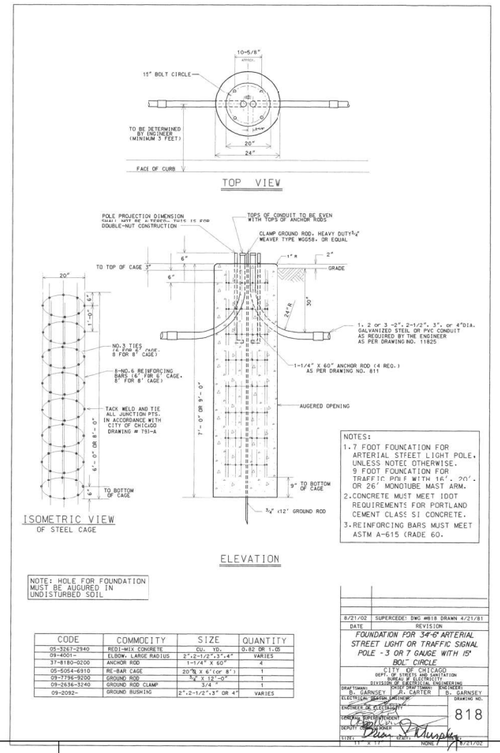

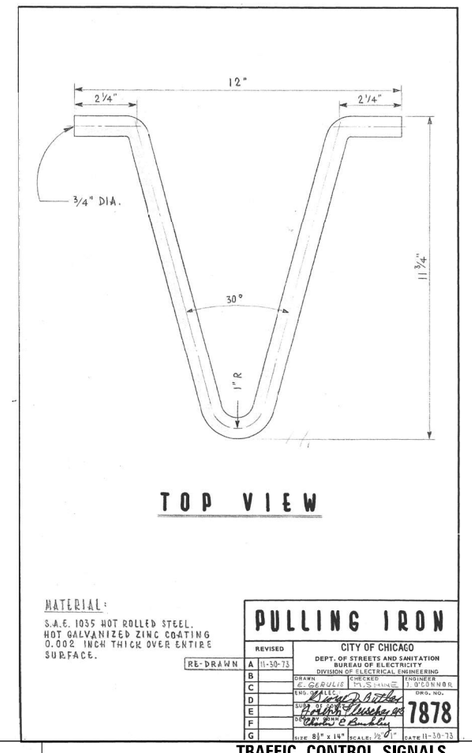

A	
DATE	REVISION

BUREAU OF ELECTRICITY
STANDARD DRAWINGS

CITY OF CHICAGO
DEPARTMENT OF TRANSPORTATION
DIVISION OF ENGINEERING

CONSULTING ENGINEERS:

AMES Engineering, Inc.
CONSULTING ENGINEERS
6330 Belmont Road, Suite 4B
Downers Grove, IL 60516

DWG. NO.

PROJECT # 10 8

SIZE: 22" X 34" | SCALE: AS NOTED | DATE: 9/12/2025

MODEL: Default
FILE NAME: F:\Projects\1058-Eisenhower IDOT-Collins\Design\Stnl\Traffic Signals\Sacramento\TS 17 - CDOT DTL2.dgn

AMES Engineering, Inc.
CONSULTING ENGINEERS
6330 Belmont Road, Suite 4B
Downers Grove, IL 60516

USER NAME = Srahman	DESIGNED - JR	REVISED -	
	DRAWN - SR	REVISED -	
PLOT SCALE = 39.9985 ' / In.	CHECKED - JR	REVISED -	
PLOT DATE = 9/9/2025	DATE - $DATE	REVISED -	

STATE OF ILLINOIS
DEPARTMENT OF TRANSPORTATION

TRAFFIC CONTROL SIGNALS
S. SACRAMENTO BOULEVARD AND W. VAN BUREN STREET
S. SACRAMENTO BOULEVARD AND W. CONGRESS PARKWAY

SCALE: | SHEET OF SHEETS | STA. | TO STA.

F.A.I. RTE.	SECTION	COUNTY	TOTAL SHEETS	SHEET NO.
290	2019-192-B-R	COOK	237	114
		CONTRACT NO. 62K65		
		ILLINOIS	FED. AID PROJECT	

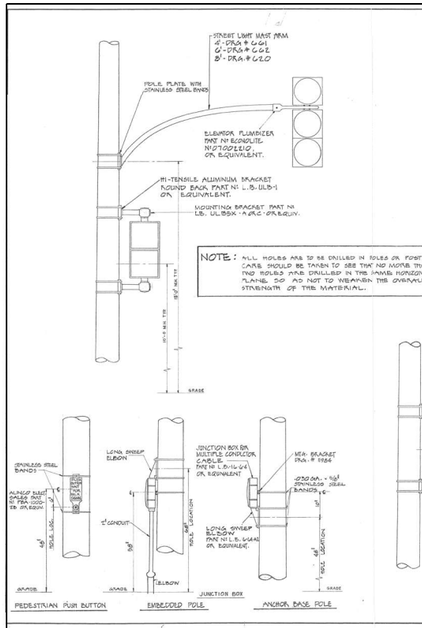

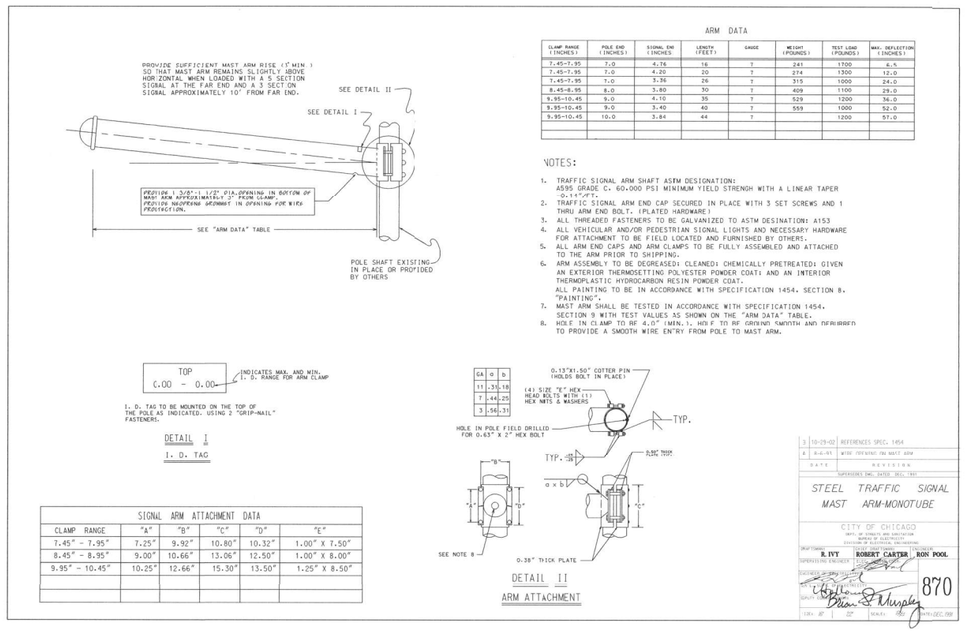

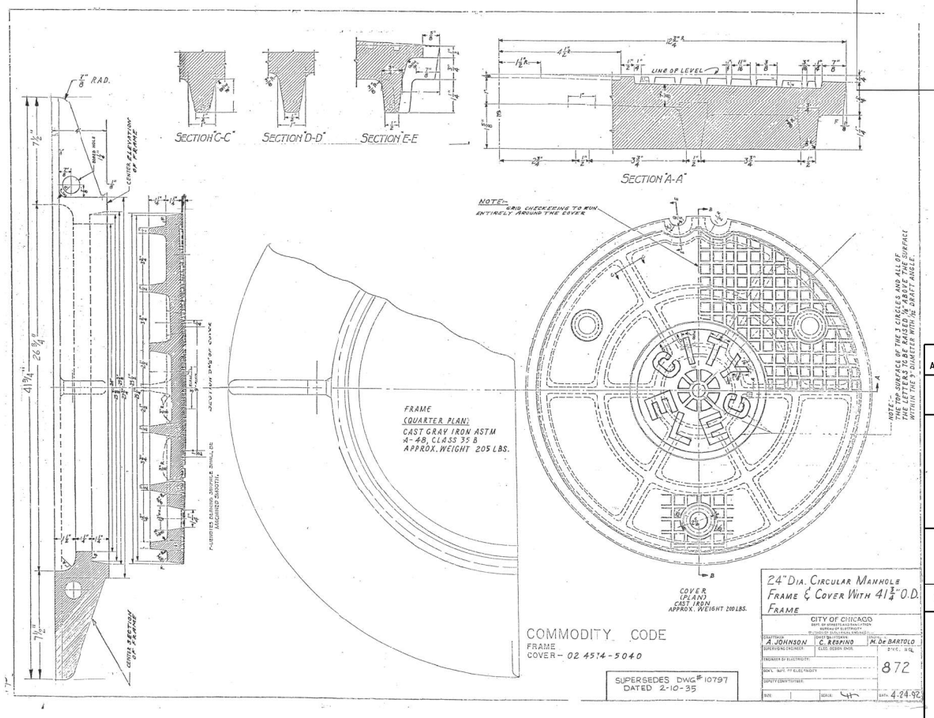

A	
DATE	REVISION

BUREAU OF ELECTRICITY
STANDARD DRAWINGS

CITY OF CHICAGO
DEPARTMENT OF TRANSPORTATION
DIVISION OF ENGINEERING

CONSULTING ENGINEERS:

AMES Engineering, Inc.
CONSULTING ENGINEERS
6330 Belmont Road, Suite 4B
Downers Grove, IL 60516

DWG. NO.

PROJECT # 10 8

SIZE: 22" X 34" | SCALE: AS NOTED | DATE: 9/12/2025

MODEL: Default
FILE NAME: F:\Projects\1058-Eisenhower EDOT-Collins\Design\Stnl\Traffic Signals\Sacramento\TS 18 - CDOT DTL3.dgn

AMES Engineering, Inc.
CONSULTING ENGINEERS
6330 Belmont Road, Suite 4B
Downers Grove, IL 60516

USER NAME = Srahman	DESIGNED - JR	REVISED -	
	DRAWN - SR	REVISED -	
PLOT SCALE = 39.9985 ' / In.	CHECKED - JR	REVISED -	
PLOT DATE = 9/9/2025	DATE - $DATE	REVISED -	

STATE OF ILLINOIS
DEPARTMENT OF TRANSPORTATION

TRAFFIC CONTROL SIGNALS
S. SACRAMENTO BOULEVARD AND W. VAN BUREN STREET
S. SACRAMENTO BOULEVARD AND W. CONGRESS PARKWAY

SCALE: | SHEET OF SHEETS | STA. | TO STA.

F.A.I. RTE.	SECTION	COUNTY	TOTAL SHEETS	SHEET NO.
290	2019-192-B-R	COOK	237	115
		CONTRACT NO. 62K65		
		ILLINOIS	FED. AID PROJECT	

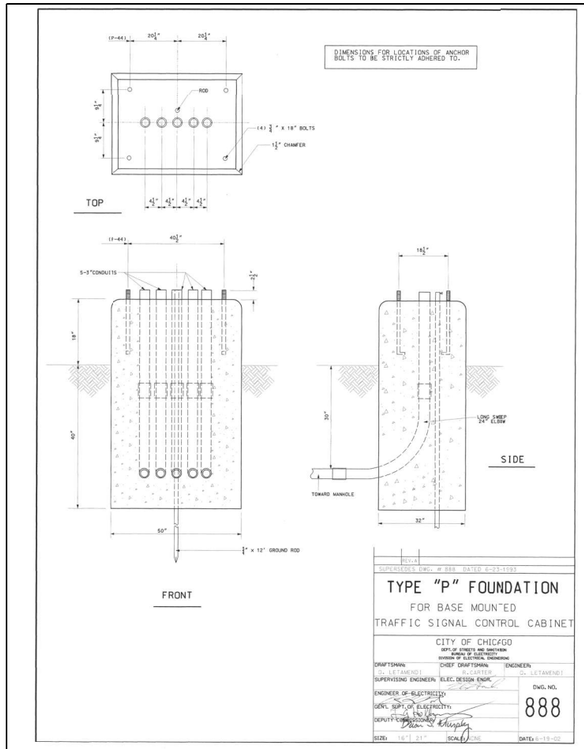

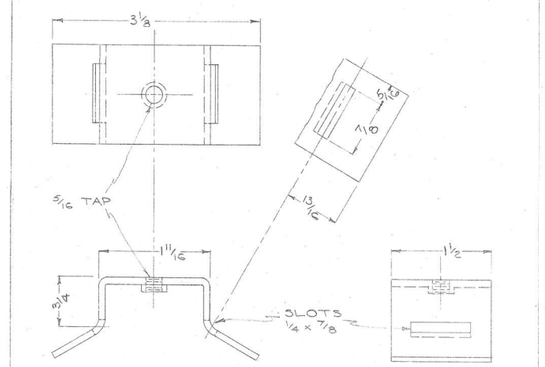

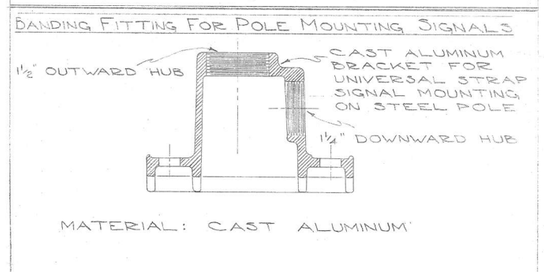

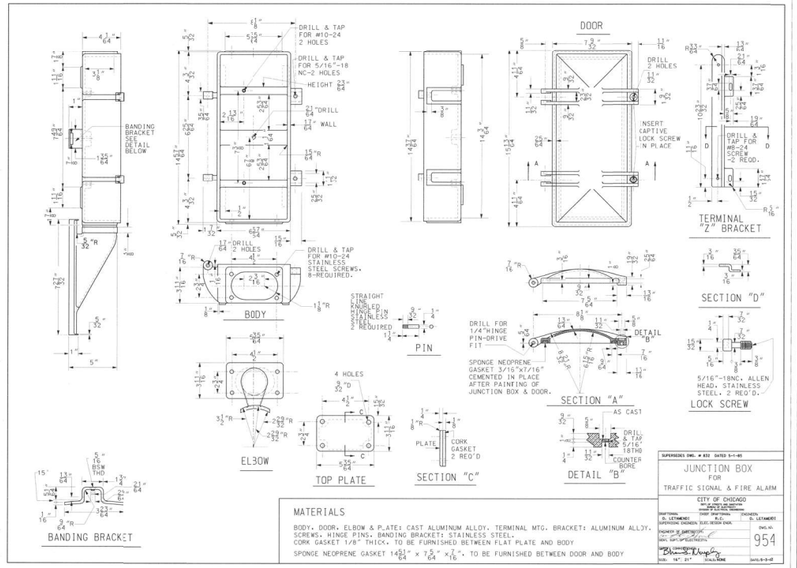

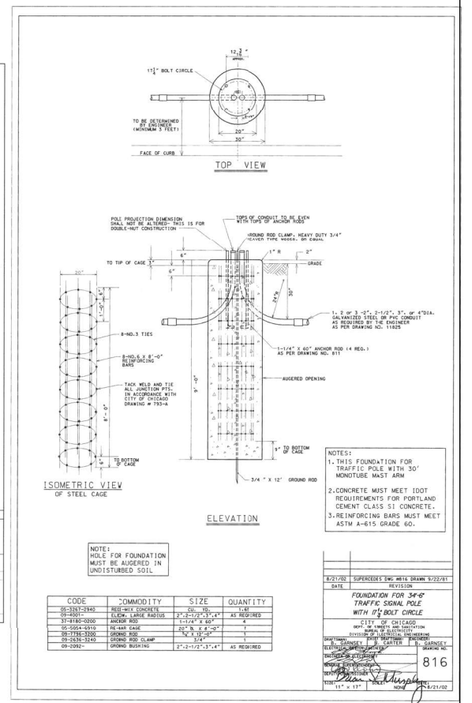

CODE	COMMODITY	SIZE	QUANTITY
05-3367-3940	REIN-MIX CONCRETE	CU. YD.	11.00
05-0501-0000	REINFORCING BARS (EPOXY COATED)	#5	AS REQUIRED
31-8160-0200	ANCHOR BOLT	1-1/4"x7'-3/4"	4
05-0954-4310	RE-MAT CAGE	40" D. x 4'-0"	1
09-2178-3390	GROUND ROD	3/4"x10'-0"	1
09-2634-3240	GROUND ROD CLAMP	3/4"	1
09-2982-	GROUND BUSHING	3"-2-1/2"-1"-#7	AS REQUIRED

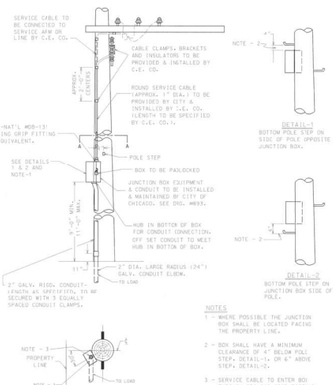

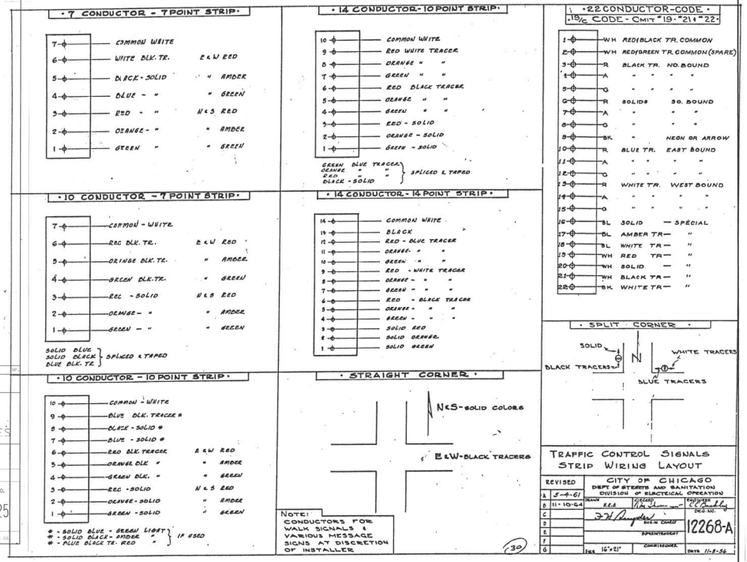

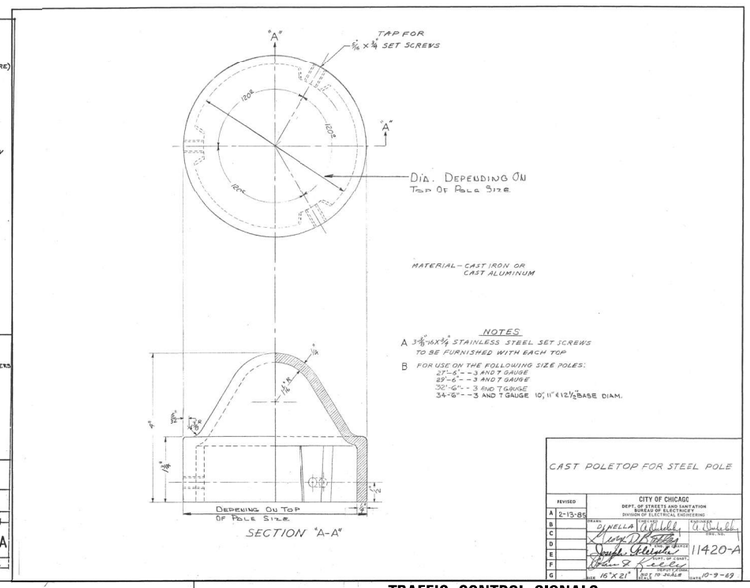

A	
DATE	REVISION

BUREAU OF ELECTRICITY
STANDARD DRAWINGS

CITY OF CHICAGO
DEPARTMENT OF TRANSPORTATION
DIVISION OF ENGINEERING

CONSULTING ENGINEERS:

AMES Engineering, Inc.
CONSULTING ENGINEERS
6330 Belmont Road, Suite 4B
Downers Grove, IL 60516
PROJECT # 10 8

DWG. NO.

SIZE: 22" X 34" SCALE: AS NOTED DATE: 9/12/2025

MODEL: Default
FILE NAME: F:\Projects\10584\Elsenhower IDOT-Collins Design\Sht\Traffic Signals\Sacramento\TS 19 - CDOT DTL4.dgn

AMES Engineering, Inc.
CONSULTING ENGINEERS
6330 Belmont Road, Suite 4B
Downers Grove, IL 60516

USER NAME = Srahman	DESIGNED - JR	REVISED -	
	DRAWN - SR	REVISED -	
PLOT SCALE = 39.9985 ' / In.	CHECKED - JR	REVISED -	
PLOT DATE = 9/9/2025	DATE - $DATE	REVISED -	

STATE OF ILLINOIS
DEPARTMENT OF TRANSPORTATION

TRAFFIC CONTROL SIGNALS
S. SACRAMENTO BOULEVARD AND W. VAN BUREN STREET
S. SACRAMENTO BOULEVARD AND W. CONGRESS PARKWAY

SCALE: SHEET OF SHEETS STA. TO STA.

F.A.I. RTE.	SECTION	COUNTY	TOTAL SHEETS	SHEET NO.
290	2019-192-B-R	COOK	237	116
		CONTRACT NO. 62K65		
	ILLINOIS FED. AID PROJECT			

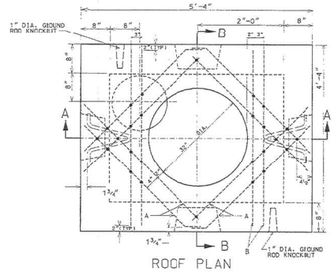

ROOF PLAN

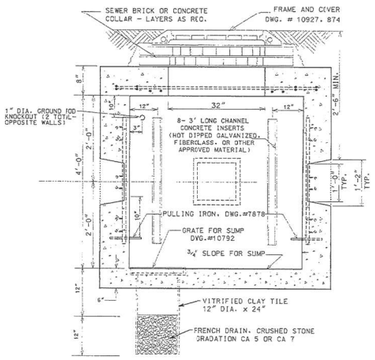

SECTION A-A

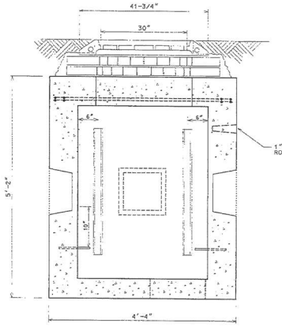

SECTION B-B

EXCAVATION (CONSTRUCTION) INFORMATION
COMPLETE MANHOLE 5.0 CU. YDS.
NEW ROOF ONLY 2.0 CU. YDS
SHEETING MANHOLE 150.0 SQ. FT.

#5 REINFORCING BARS			
BAR	LENGTH	NO. OF RODS	TOTAL FT.
A	2'-9"	8	22'-0"
B	4'-0"	4	16'-0"

MATERIALS FOR ROOF ONLY	
CONCRETE	0.5 CU. YDS.
REINFORCING BARS #5	38'

DRG.	MATERIAL	CODE	SIZE	NO. REQ.
	FORM FOR MANHOLE	17-4674-0000 17-4648-5320	3'-6"x4'-0"	1
	CONDUIT END BELL		AS REQ.	
	TILE, SEWER	39-4038-3200	12"x24"	
	SLAB BOLSTER		2"	20'
	BAR, REINFORCING	20-5472-9650	⅝" ø	36'
	TIE WIRE	13-9938-6106	#20GA.	25'
7878	PULLING IRON	02-4483-6970	¾" ø	2
	CONCRETE	05-3267-2940	3 CU. YDS	
	SEWER BRICK	05-1452-9720	STD.	50
10792	GRATE FOR SUMP	02-4268-7100	24" ø	1
	GROUND ROD	09-7796-9200	¾"x10'	1
	GROUND ROD CLAMP	09-2636-3240	¾"	1
	CRUSHED STONE	05-9057-5471	¾"	ONE BAG
874	MANHOLE FRAME	02-4299-5524	30"	1
10927	MANHOLE COVER	02-4574-5040	30"	1
	CONC. CHANNEL INSERT	02-4574-5060	3'	8

NOTES:
1. PRECAST MANHOLES MUST BE PROVIDED WITH CHANNEL INSERTS, PULLING IRONS, AND CONDUIT KNOCK-OUTS.
2. ALL CONCRETE MUST BE PORTLAND CEMENT CONCRETE MEETING IDOT REQUIREMENTS FOR CLASS PC CONCRETE FOR PRE-CAST STRUCTURES, OR CLASS SI CONCRETE FOR CAST-IN-PLACE STRUCTURES.
3. REINFORCING BARS MUST MEET ASTM A615 GRADE 60.

DATE	REVISION
8/21/02	SUPERCEDES DWG. 729 DATED JAN 12, 1996
1/12/98	SUPERCEDES DWG. 729 DATED NOV. 21, 1973

3' x 4' x 4'
CONCRETE MANHOLE
WITH 30" FRAME AND COVER

CITY OF CHICAGO
DEPT. OF STREETS AND SANITATION
BUREAU OF ELECTRICITY
DIVISION OF ELECTRICAL ENGINEERING

DRAFTSMAN: B. GARNSEY	R. CARTER	B. GARNSEY
ELECTRICAL ENGINEER		DRAWING NO.
ENGINEER OF ELECTRICITY		729
GENERAL SUPERINTENDENT AND CHIEF ELECTRICIAN		
DEPUTY COMMISSIONER		
SIZE: 11" x 22"	SCALE: NONE	DATE: 6/21/02

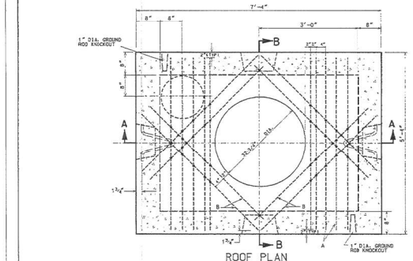

ROOF PLAN

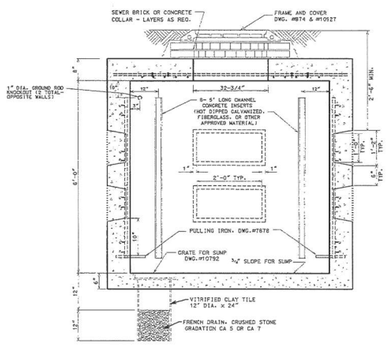

SECTION A-A

EXCAVATION (CONSTRUCTION) INFORMATION
COMPLETE MANHOLE 11.5 CU. YDS.
NEW ROOF ONLY 2.2 CU. YDS
SHEETING MANHOLE 254 SQ. FT.

#5 REINFORCING BARS			
BAR	LENGTH	NO. OF RODS	TOTAL FT.
A	5'-0"	10	50'-0"
B	5'-0"	8	40'-0"

MATERIALS FOR ROOF ONLY	
CONCRETE	1.25 CU. YDS.
REINFORCING BARS #5	90'-0"

DRG.	MATERIAL	CODE	SIZE	NO. REQ.
	FORM FOR MANHOLE	17-4674-4000 17-4648-5320	6'-6"x6'-0"	1
	CONDUIT END BELL		AS REQ.	
	TILE, SEWER	39-4038-3200	12"x24"	50
	SLAB BOLSTER		2"	25'
	BAR, REINFORCING	20-5472-9650	⅝" ø	54'
	TIE WIRE	13-9938-6106	#20GA.	45'
7878	PULLING IRON	02-4483-6970	¾" ø	2
	CONCRETE	05-3267-2940	5.5 CU. YDS	
	SEWER BRICK	05-1452-9720	STD.	50
10792	GRATE FOR SUMP	02-4268-7100	24" ø	1
	GROUND ROD	09-7796-9200	¾"x10'	1
	GROUND ROD CLAMP	09-2636-3240	¾"	1
	CRUSHED STONE	05-9057-5471	¾"	3 BAGS
874	MANHOLE FRAME	02-4299-5524	30"	1
10927	MANHOLE COVER	02-4574-5040	30"	1
	CONC. CHANNEL INSERT	02-4574-5060	5'	8

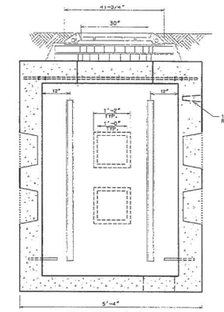

SECTION B-B

NOTES:
1. PRECAST MANHOLES MUST BE PROVIDED WITH CHANNEL INSERTS, PULLING IRONS, AND CONDUIT KNOCK-OUTS.
2. ALL CONCRETE MUST BE PORTLAND CEMENT CONCRETE MEETING IDOT REQUIREMENTS FOR CLASS PC CONCRETE FOR PRE-CAST STRUCTURES, OR CLASS SI CONCRETE FOR CAST-IN-PLACE STRUCTURES.
3. REINFORCING BARS MUST MEET ASTM A615 GRADE 60.

DATE	REVISION
10/8/02	SUPERCEDES DWG. 732 DATED 3/21/74

4' x 6' x 6'
CONCRETE MANHOLE
WITH 30" FRAME AND COVER

CITY OF CHICAGO
DEPT. OF STREETS AND SANITATION
BUREAU OF ELECTRICITY
DIVISION OF ELECTRICAL ENGINEERING

DRAFTSMAN: B. GARNSEY	R. CARTER	B. GARNSEY
ELECTRICAL ENGINEER		DRAWING NO.
ENGINEER OF ELECTRICITY		733
GENERAL SUPERINTENDENT AND CHIEF ELECTRICIAN		
DEPUTY COMMISSIONER		
SIZE: 11" x 22"	SCALE: NONE	DATE: 10/08/02

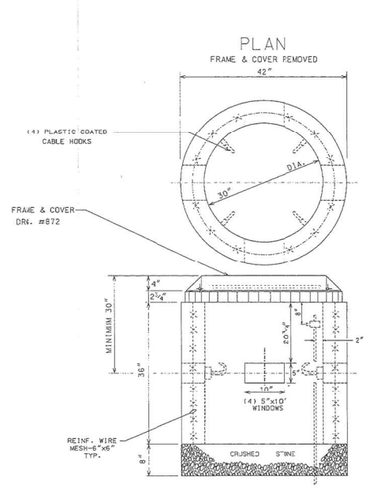

COMPLETE COMMODITY CODE NO. 05-6610-5310M			
CODE NO.	MATERIALS	SIZE	QUAN.
(1) 05-6610-5310	PRE-CAST HANDHOLE	30"X36"	1
(2) 05-9075-5470	STONE¾" CRUSHED	BAG	5
(2) 05-5082-5330	SONO TUBE	30"	1
(2) 05-5082-5342	SONO TUBE	42"	1
(2) 05-3267-2940	CONC. REDI-MIX	CU. YD.	½
(2) 57-0770-0000	6" X 6" MESH	36"X10'	1
05-1452-9720	BRICK		24
02-4299-5524	FRAME MANHOLE	24"	1
02-4574-5040	COVER, MANHOLE	24"	1
09-7796-9312	GROUND ROD	¾"X12'	1
09-2630-3240	GROUND CLAMP		1

(1) PRE-CAST HANDHOLE SHALL INCLUDE CABLE HOOKS AND CONDUIT KNOCKOUTS.
(2) THESE ITEMS ARE FOR POURED-IN-PLACE HANDHOLES ONLY.

CONSTRUCTION NOTES:

1. 8" BED OF STONE FOR DRAINAGE.
2. ALL METALLIC CONDUITS ENTERING HANDHOLE SHALL EXTEND MINIMUM 1" & MAXIMUM 3" INSIDE INNER WALL AND BE EQUIPPED WITH AN APPROVED TYPE UP THREADED GROUNDING BUSHING.



A		
DATE	REVISION	

BUREAU OF ELECTRICITY
STANDARD DRAWINGS

CITY OF CHICAGO
DEPARTMENT OF TRANSPORTATION
DIVISION OF ENGINEERING

CONSULTING ENGINEERS:

AMES Engineering, Inc.
CONSULTING ENGINEERS
6330 Belmont Road, Suite 4B
Downers Grove, IL 60516

PROJECT # 10 8

DWG. NO.

SIZE: 22" X 34" | SCALE: AS NOTED | DATE: 9/12/2025

MODEL: Default
FILE NAME: F:\Projects\1058\Eisenhower IDOT-Collins\Design\Shts\Traffic Signals\Sacramento\TS 20 - CDOT DTL5.dgn

AMES Engineering, Inc.
CONSULTING ENGINEERS
6330 Belmont Road, Suite 4B
Downers Grove, IL 60516

USER NAME = Srahman	DESIGNED - JR	REVISED -	STATE OF ILLINOIS DEPARTMENT OF TRANSPORTATION	TRAFFIC CONTROL SIGNALS S. SACRAMENTO BOULEVARD AND W. VAN BUREN STREET S. SACRAMENTO BOULEVARD AND W. CONGRESS PARKWAY
	DRAWN - SR	REVISED -		
PLOT SCALE = 39.9985 ' / in.	CHECKED - JR	REVISED -		
PLOT DATE = 9/9/2025	DATE - $DATE	REVISED -		SCALE: SHEET OF SHEETS STA. TO STA.

F.A.I. RTE.	SECTION	COUNTY	TOTAL SHEETS	SHEET NO.
290	2019-192-B-R	COOK	237	117
		CONTRACT NO. 62K65		
	ILLINOIS	FED. AID PROJECT		

TOP VIEW
FRAME, COVER & TOP
OF HANDHOLE REMOVED

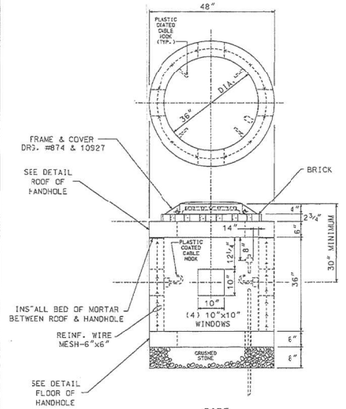

SIDE
ELEVATION

COMPLETE COMMODITY CODE NO. 05-6610-5310M			
CODE NO.	MATERIALS	SIZE	QUAN.
(1) 05-6610-5312	PRE-CAST HANDHOLE	36" x 36"	1
(2) 05-6615-5312	PRE-CAST ROOF & FLOOR	SEE DETAIL	2
05-9075-5470	STONE 3/4" CRUSHED	BAG	5
05-1452-9720	BRICK		24
02-4291-5524	FRAME, MANHOLE	30"	1
02-4574-5624	COVER, MANHOLE	30"	1
09-7791-9312	GROUND ROD	3/4" x12'	1
09-2631-3240	GROUND CLAMP		1
(3) 05-5082-5330	SONO TUBE	36"	1
(3) 05-5082-5342	SONO TUBE	48"	1
(3) 05-3267-2940	CONC. REDI-MIX	CU. YD.	1
(3) 20-5472-9630	REINFORCING BAR	#3 (3/8")	40'
(3) 20-5472-9630	REINFORCING BAR	#3 (3/8")	16'
(3) 20-5472-9640	REINFORCING BAR	#4 (1/2")	6'
(3) 57-0770-0000	MESH (6" X6")	36" X 11'	1

(1) PRE-CAST HANDHOLE SHALL INCLUDE CABLE HOOKS AND CONDUIT KNOCK-OUTS.
(2) PRE-CAST ROOF & FLOOR SHALL INCLUDE LIFTING EYES.
(3) THESE ITEMS ARE FOR POURED-IN-PLACE HANDHOLES ONLY.

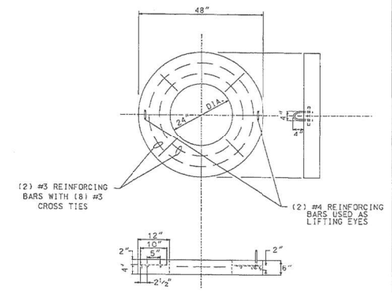

DETAIL-ROOF & FLOOR OF HANDHOLE

CONSTRUCTION NOTES:

1 - 3" BED OF STONE FOR DRAINAGE.

2 - ALL METALLIC CONDUIT(S) ENTERING HANDHOLE SHALL EXTEND MIN. 1" & MAX. OF 3" INSIDE INNER WALL & BE EQUIPPED WITH AN APPROVED TYPE THREADED GROUNDING BUSHING.

DATE	REVISION	
B	10-22-99	ADDED CABLE HOOKS PER COMMISSIONER MURPHY'S MEMO (DATED 10-20-99)
A		REMOVE LEGEND

36" DIA. HEAVY DUTY
CONCRETE HANDHOLE
WITH 30" FRAME &
COVER FOR
STREET INSTALLATION
CITY OF CHICAGO
DEPT. OF STREETS and SANITATION
BUREAU OF ELECTRICITY
DIVISION OF ELECTRICAL ENGINEERING

DRAFTSMAN	CHIEF DRAFTSMAN	ENGINEER in CHARGE
M. PATTON	B. CARTER	G. TRUMPA
ELECTRICAL ENGINEER	ASSISTANT ENGINEER	ENGINEER OF ELECTRICITY
APPROVED: COMMISSIONER OF STREETS and SANITATION		
APPROVED: DEPUTY COMMISSIONER		
APPROVED: CHIEF ENGINEER		

DWG. NO. 871
SIZE: 11"x17" SCALE: NONE DATE: 1-12-98

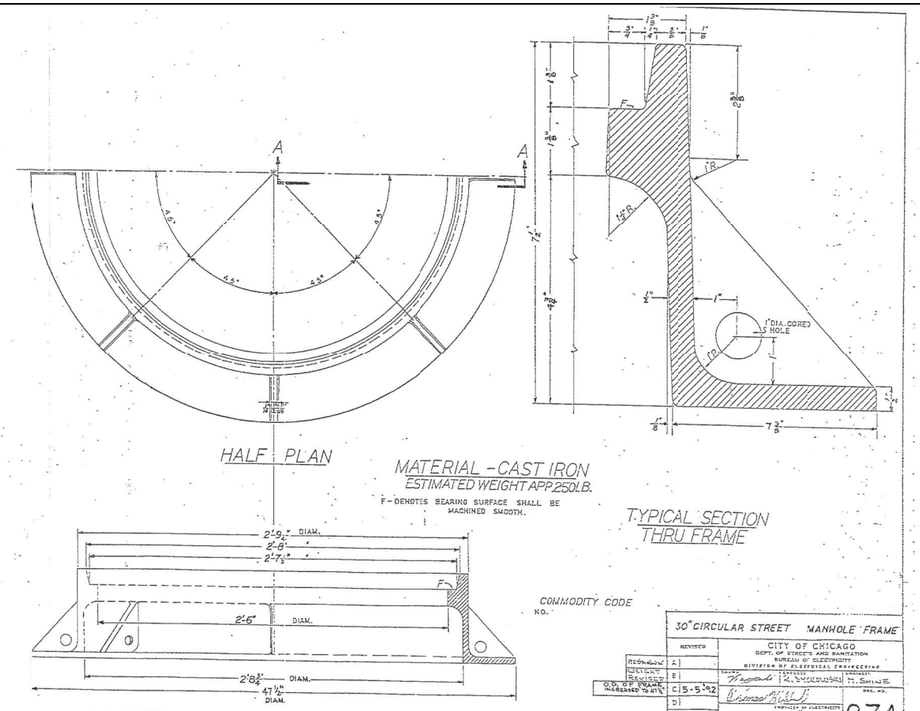

HALF PLAN

MATERIAL - CAST IRON
ESTIMATED WEIGHT APP. 250 LB.

F - DENOTES BEARING SURFACE SHALL BE MACHINED SMOOTH.

TYPICAL SECTION THRU FRAME

HALF ELEVATION

HALF SECTION A-A

COMMODITY CODE NO.

30" CIRCULAR STREET MANHOLE FRAME

REVISED		CITY OF CHICAGO DEPT. OF STREETS AND SANITATION BUREAU OF ELECTRICITY DIVISION OF ELECTRICAL ENGINEERING
REVISED	A	DRAWN: R.J. SKOLOUSKI
REVISED	B	TRACED: T.L. SIMONS
O.D. OF FRAME INCREASED TO 41"	C	CHECKED: 5-5-42
	D	APPROVED:
	E	ENGINEER OF ELECTRICITY
	F	APPROVED:
		COMMISSIONER OF STREETS AND SANITATION

SUPERSEDES DRG. # 10926 DATED 4-6-95

DWG. NO. 874

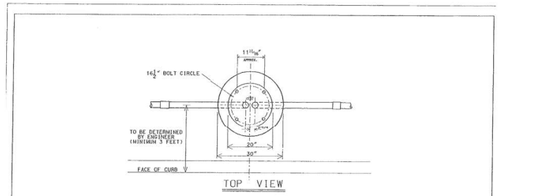

TOP VIEW

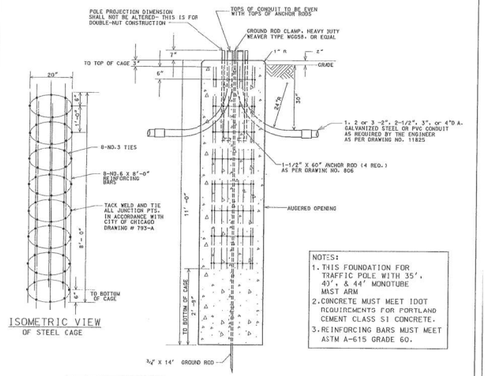

ISOMETRIC VIEW
OF STEEL CAGE

ELEVATION

NOTES:
1. THIS FOUNDATION FOR TRAFFIC POLE WITH 35', 40'- & 44' MONOTUBE MAST ARM
2. CONCRETE MUST MEET IDOT REQUIREMENTS FOR PORTLAND CEMENT CLASS SI CONCRETE.
3. REINFORCING BARS MUST MEET ASTM A-615 GRADE 60.

NOTE:
HOLE FOR FOUNDATION MUST BE AUGERED IN UNDISTURBED SOIL

CODE	COMMODITY	SIZE	QUANTITY
05-3267-2940	REDI-MIX CONCRETE	CU. YD.	2.25
09-4001-	ELBOW, LARGE RADIUS	2"-2-1/2"-3"-4"	AS REQUIRED
31-4180-0200	ANCHOR ROD	1-1/2"Ø X 60"	4
05-5054-4910	RE-BAR CAGE	20" Ø X 8'-0"	1
09-7756	GROUND ROD	3/4" X 14'-0"	1
09-2636-	GROUND ROD CLAMP	3/4"	1
09-2092-	GROUND BUSHING	2"-2-1/2"-3"-4"	AS REQUIRED

DATE	REVISION
8/21/02	SUPERCEDES DWG #817 Drawn 4/25/91

FOUNDATION FOR 34'-6" TRAFFIC SIGNAL POLE WITH 15" BOLT CIRCLE

CITY OF CHICAGO
DEPT. OF STREETS and SANITATION
BUREAU OF ELECTRICITY
DIVISION OF ELECTRICAL ENGINEERING

DRAFTSMAN	CHIEF DRAFTSMAN	ENGINEER in CHARGE
B. GARNSEY	B. CARTER	B. GARNSEY
ELECTRICAL ENGINEER	ASSISTANT ENGINEER	DRAWING NO.
ENGINEER OF ELECTRICITY		817
Wesley J. Eichelberger		
DEPUTY COMMISSIONER		
Brian P. Murphy		DATE: 8/21/02

SIZE: 11" x 17" SCALE: NONE

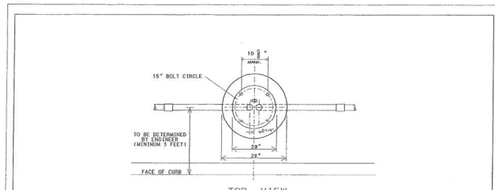

TOP VIEW

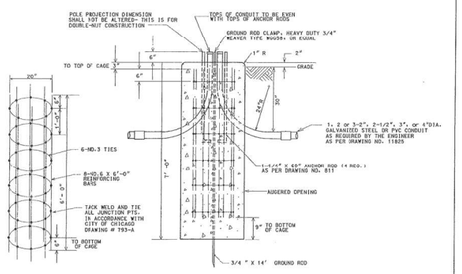

ISOMETRIC VIEW
OF STEEL CAGE

ELEVATION

NOTES:
1. CONCRETE MUST MEET IDOT REQUIREMENTS FOR PORTLAND CEMENT CLASS SI CONCRETE.
2. REINFORCING BARS MUST MEET ASTM A-615 GRADE 60.

NOTE:
HOLE FOR FOUNDATION MUST BE AUGERED IN UNDISTURBED SOIL

CODE	COMMODITY	SIZE	QUANTITY
05-3267-2940	REDI-MIX CONCRETE	CU. YD.	1.11
09-4001-	ELBOW, LARGE RADIUS	3"-2-1/2"-3"-4"	AS REQUIRED
31-4180-0200	ANCHOR ROD	1-1/4"Ø X 60"	4
05-5054-4910	RE-BAR CAGE	20" Ø X 6'-0"	1
09-7756	GROUND ROD	3/4" X 14'-0"	1
09-2636-	GROUND ROD CLAMP	3/4"	1
-	GROUND BUSHING	2"-2-1/2"-3"-4"	AS REQUIRED

DATE	REVISION

FOUNDATION FOR CHICAGO 2000 GATEWAY POLE & CHICAGO 2000 PEDESTRIAN POLE

CITY OF CHICAGO
DEPT. OF STREETS and SANITATION
BUREAU OF ELECTRICITY
DIVISION OF ELECTRICAL ENGINEERING

DRAFTSMAN	CHIEF DRAFTSMAN	ENGINEER in CHARGE
B. GARNSEY	B. CARTER	B. GARNSEY
ELECTRICAL ENGINEER	ASSISTANT ENGINEER	DRAWING NO.
ENGINEER OF ELECTRICITY		953
Wesley J. Eichelberger		
DEPUTY COMMISSIONER		
Brian P. Murphy		DATE: 8/21/02

SIZE: 11" x 17" SCALE: NONE

A	
DATE	REVISION

BUREAU OF ELECTRICITY
STANDARD DRAWINGS

CITY OF CHICAGO
DEPARTMENT OF TRANSPORTATION
DIVISION OF ENGINEERING

CONSULTING ENGINEERS:

AMES Engineering, Inc.
CONSULTING ENGINEERS
6330 Belmont Road, Suite 4B
Downers Grove, IL 60516

DWG. NO.

PROJECT # 10 8

SIZE: 22" X 34" SCALE: AS NOTED DATE: 9/12/2025

MODEL: Default
FILE NAME: P:\Projects\1058-Eisenhower IDOT-Collins\Design\SmiTraffic Signal\Sacramento\TS 21 - CDOT DTL6.dgn

AMES Engineering, Inc.
CONSULTING ENGINEERS
6330 Belmont Road, Suite 4B
Downers Grove, IL 60516

USER NAME = Srahman	DESIGNED - JR	REVISED -	
	DRAWN - SR	REVISED -	
PLOT SCALE = 39.9985 ' / In.	CHECKED - JR	REVISED -	
PLOT DATE = 9/9/2025	DATE - $DATE	REVISED -	

STATE OF ILLINOIS
DEPARTMENT OF TRANSPORTATION

TRAFFIC CONTROL SIGNALS
S. SACRAMENTO BOULEVARD AND W. VAN BUREN STREET
S. SACRAMENTO BOULEVARD AND W. CONGRESS PARKWAY

SCALE: SHEET OF SHEETS STA. TO STA.

F.A.I. RTE.	SECTION	COUNTY	TOTAL SHEETS	SHEET NO.
290	2019-192-B-R	COOK	237	118
		CONTRACT NO. 62K65		
	ILLINOIS FED. AID PROJECT			

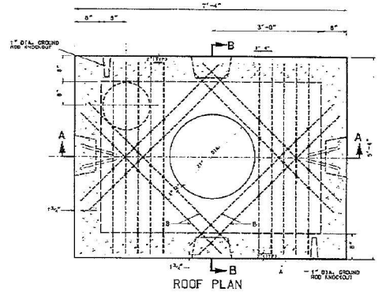

ROOF PLAN

EXCAVATION (CONSTRUCTION INFORMATION)	
COMPLETE MANHOLE	11.5 CU. YDS.
NEW ROOF ONLY	2.2 CU. YDS
SHEETING MANHOLE 254 SQ. FT.	

#5 REINFORCING BARS			
MARK	LENGTH	NO. OF RODS	TOTAL FT.
A	5'-0"	10	50'-0"
B	5'-6"	8	44'-0"

MATERIALS FOR ROOF ONLY	
CONCRETE	1.25 CU. YDS.
REINFORCING BARS #5	94'-0"

DRG.	MATERIAL	CODE	SIZE	No. Req.
	FORM FOR MANHOLE	17-0674-4000 17-0684-4320	4'-X6'-X6"	1
	CONDUIT END BELL		15" MCP.	
	TILE, SEWER	20-4698-4200	12"-24"	80
	SLAB BOLSTER		2"	25'
	BAR, REINFORCING	20-5472-9650	⅝" ø	94'
	TIE WIRE	17-4938-6100	#20GA.	46'
1078	PULLING IRON	20-4483-0970	¾" ø	2
	CONCRETE	05-3257-2540	6.5 CU.YDS.	
	SEWER BRICK	05-1452-8720	STD.	50
1079	GRATE FOR SUMP	02-4356-7100	15" ø	1
	GROUND ROD	05-1796-5200	¾"x10'	1
	GROUND ROD CLAMP	20-0496-8240	¾"	1
	CRUSHED STONE	05-9057-5471	¾"	¾ TON
672	MANHOLE FRAME	02-4299-5524	24"	1
672	MANHOLE COVER	02-4574-5040	24"	1
	CONC. CHANNEL INSERT	02-4574-5040	5'	8

NOTES:
1. PRECAST MANHOLES MUST BE PROVIDED WITH CHANNEL INSERTS, PULLING IRONS, AND CONDUIT KNOCK-OUTS.
2. ALL CONCRETE MUST BE PORTLAND CEMENT CONCRETE MEETING IDOT REQUIREMENTS FOR CLASS PC CONCRETE FOR PRE-CAST STRUCTURES, OR CLASS SI CONCRETE FOR CAST-IN-PLACE STRUCTURES.
3. REINFORCING BARS MUST MEET ASTM A615 GRADE 60.

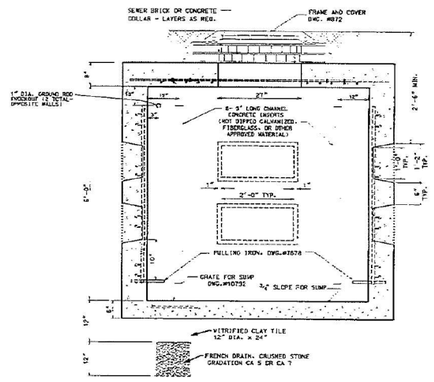

SECTION A-A

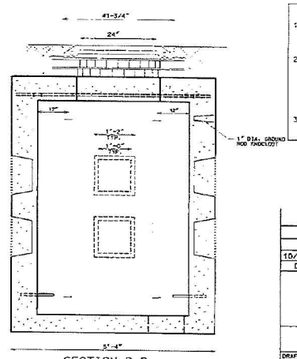

SECTION B-B

DATE	REVISION
10/8/02	SUPERCEDES DWG. 732 DATED 3/21/74

4' x 6' x 6' CONCRETE MANHOLE WITH 24" FRAME AND COVER

CITY OF CHICAGO
DEPT. OF STREETS AND SANITATION
DIVISION OF ELECTRICAL ENGINEERING

DRAFTSMAN	SITE PREPARATION	ENGINEER
S. GARNSEY	R. CARTER	B. GARNSEY

ELECTRICAL ASSISTANT — DRAWING NO.
ENGINEER OF ELECTRICITY
GENERAL SUPERINTENDENT
SECRETARY
SIZE: 17" x 22" — SCALE: NONE — DATE: 10/08/02

732

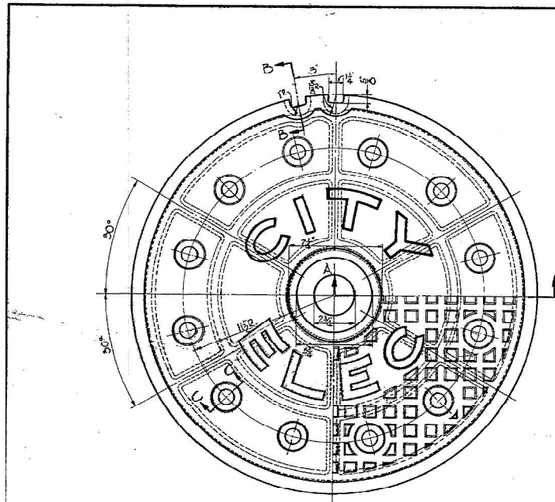

PLAN

MATERIAL - CAST IRON
ESTIMATED WEIGHT 315 lb.

F- DENOTES BEARING SURFACE SHALL BE MACHINED SMOOTH.

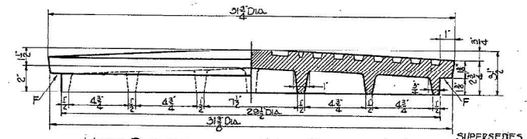

HALF ELEVATION — HALF SECTION A-A

SUPERSEDES DRG. 7223 DATED 6-29-18
COMMODITY CODE 02-4574-2680

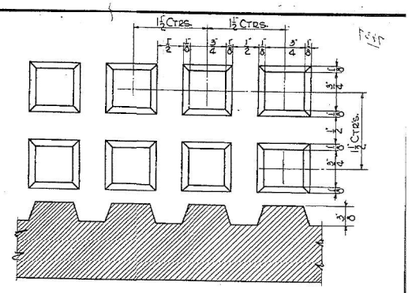

DETAIL OF CORRUGATIONS

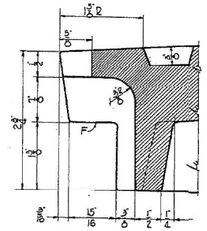

SECTION B-B

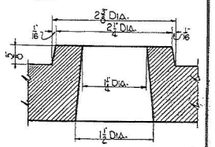

SECTION C-C

C	WEIGHT REVISED
B	WEIGHT REVISED
A	IDENTIFICATION LETTERS ON COVER CHANGED

30" CIRCULAR STREET MANHOLE COVER

REVISED	CITY OF CHICAGO DEPT. OF STREETS AND SANITATION DIVISION OF ELECTRICAL ENGINEERING	
A 12-7-55	W. ZOLESKI	
B 9-7-79		
C 8-9-85		
J		
K		10927
L		
M	16×21"	4-334

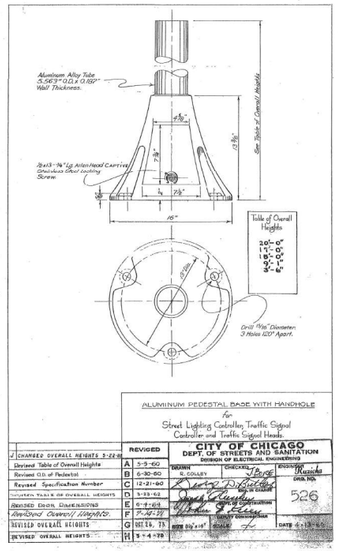

ALUMINUM PEDESTAL BASE WITH HANDHOLE
for
Street Lighting Controller, Traffic Signal Controller and Traffic Signal Heads

CITY OF CHICAGO
DEPT. OF STREETS AND SANITATION
DIVISION OF ELECTRICAL ENGINEERING

CHANGED OVERALL HEIGHTS 3-22-84	REVISED			
Revised Table of Overall Heights	A	5-5-60	DESIGNED	CHECKED
Revised O.D. of Pedestal	B	6-30-60	R. CRAILEY	
Revised Specification Number	C	12-21-60		
REVISED TABLE OF OVERALL HEIGHTS	D	3-23-62		
REVISED DRGN. DIMENSIONS	E	6-1-62		
REVISED OVERALL HEIGHTS	F	7-14-71		
REVISED OVERALL HEIGHTS	G	DEC 26, 73	SIZE 22½"x17"	SCALE ½
REVISED OVERALL HEIGHTS	H	3-14-79		

DESIGNED — APPROVED — DRAWING NO. 526
DATE 6-13-60

A	
DATE	REVISION

BUREAU OF ELECTRICITY
STANDARD DRAWINGS

CITY OF CHICAGO
DEPARTMENT OF TRANSPORTATION
DIVISION OF ENGINEERING

CONSULTING ENGINEERS:

AMES Engineering, Inc.
CONSULTING ENGINEERS
6330 Belmont Road, Suite 4B
Downers Grove, IL 60516

PROJECT # 1058

DWG. NO.

SIZE: 22" X 34" | SCALE: AS NOTED | DATE: 9/12/2025

MODEL: Default
FILE NAME: F:\Projects\1058-Elsenhower IDOT-Collins\Design\Shi\Traffic Signals\Sacramento\TS 22 - CDOT DTL7.dgn

AMES Engineering, Inc.
CONSULTING ENGINEERS
6330 Belmont Road, Suite 4B
Downers Grove, IL 60516

USER NAME	= tmickey	DESIGNED	- JR	REVISED	-
		DRAWN	- SR	REVISED	-
PLOT SCALE	= 39.9985 ' / in.	CHECKED	- JR	REVISED	-
PLOT DATE	= 10/8/2025	DATE	- $DATE	REVISED	-

STATE OF ILLINOIS
DEPARTMENT OF TRANSPORTATION

TRAFFIC CONTROL SIGNALS
S. SACRAMENTO BOULEVARD AND W. VAN BUREN STREET
S. SACRAMENTO BOULEVARD AND W. CONGRESS PARKWAY

SCALE: | SHEET OF SHEETS | STA. | TO STA.

F.A.I. RTE.	SECTION	COUNTY	TOTAL SHEETS	SHEET NO.
290	2019-192-B-R	COOK	237	119
		CONTRACT NO. 62K65		
	ILLINOIS FED. AID PROJECT			

SIGN PANEL – TYPE 1 OR TYPE 2

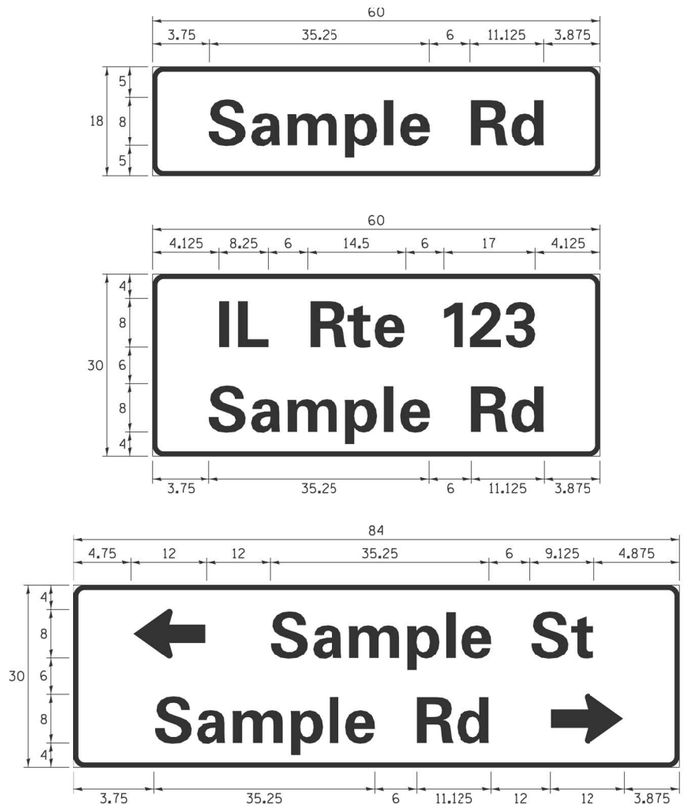

DESIGN SERIES	AREA (SQ FT)	SIGN PANEL TYPE	SHEETING TYPE	QTY. REQUIRED
D OR C	-	1 OR 2	ZZ	-

COMMON STREET NAME ABBREVIATIONS AND WIDTHS

NAME	ABBREVATION	WIDTH (INCH)	
		SERIES "C"	SERIES "D"
AVENUE	Ave	15.000	18.250
BOULEVARD	Blvd	17.125	20.000
CIRCLE	Cir	11.125	13.000
COURT	Ct	8.250	9.625
DRIVE	Dr	8.625	10.125
HIGHWAY	Hwy	18.375	22.000
ILLINOIS	IL	7.000	8.250
LANE	Ln	9.125	10.750
PARKWAY	Pkwy	23.375	27.375
PLACE	Pl	7.125	7.750
ROAD	Rd	9.625	11.125
ROUTE	Rte	12.625	14.500
STREET	St	8.000	9.125
TERRACE	Ter	12.625	14.625
TRAIL	Tr	7.750	9.125
UNITED STATES	US	10.375	12.250

GENERAL NOTES

1. WHERE MAST ARM MOUNTED STREET NAME SIGNS ARE SPECIFIED, THE MAST ARM ASSEMBLY AND POLES SHALL BE DESIGNED TO SUPPORT THE LOADINGS CALLED FOR ON STANDARDS 877001, 877002, 877006, 877011 AND 877012, AS APPLICABLE, PLUS TWO (2) SIGN PANELS 2'-6" x 8'-0" MOUNTED AS SHOWN. THE DESIGN SHALL BE IN ACCORDANCE WITH THE REQUIREMENTS OF THE CURRENT "STANDARD SPECIFICATIONS FOR STRUCTURAL SUPPORTS FOR HIGHWAY SIGNS, LUMINAIRES, AND TRAFFIC SIGNALS" AS PUBLISHED BY THE AMERICAN ASSOCIATION OF STATE HIGHWAY AND TRANSPORTATION OFFICIALS FOR 80 M.P.H. WIND VELOCITY.
2. ALL SIGNS SHALL CONSIST OF A WHITE LEGEND AND BORDER (TYPE ZZ SHEETING) ON A GREEN BACKGROUND (TYPE ZZ SHEETING)
3. THE SIGN LENGTH SHALL BE IN 6-INCH INCREMENTS, BUT THE OVERALL LENGTH SHALL NOT EXCEED 8'-0". ALL BORDERS SHALL BE 3/4" WIDE. CORNER RADIUS SHALL BE 1-7/8". THE SPACING BETWEEN THE WORDS SHOULD BE 6", IF POSSIBLE, BUT MAY BE REDUCED TO 5" WHEN SPACING IS CRITICAL. A MINIMUM OF 2-1/2" SHALL BE INCLUDED BETWEEN THE WORD AND THE RIGHT AND LEFT EDGES OF THE SIGN.
4. A PREFERRED METHOD FOR THE SIGN DESIGN IS TO USE SERIES "D" LETTER ON A ONE-LINE SIGN 18" IN HEIGHT AND A MAXIMUX OF 8'-0" IN WIDTH. IF SERIES "D" DOES NOT FIT ON A 8"-0" SIGN, THEN SERIES "C" SHOULD BE TRIED. IF SERIES "C" DOES NOT FIT ON A 8'-0" SIGN, A 30" HIGH TWO-LINE SIGN CAN BE USED. THE CROSSROAD DESIGNATION AS TO STREET, AVENUE, ETC. SHOULD BE SPELLED OUT ON THE SECOND LINE, IF THERE IS SPACE AVAILABLE.
5. LED ILLUMINATED STREET NAME SIGNS CAN BE USED IN PLACE OF REGULAR SIGN PANELS BUT ANY SPECIAL WORDING AND SYMBOLOGY MUST BE APPROVED BY THE DEPARTMENT. GENERAL DESIGN REQUIREMENT AS LISTED ABOVE (COLOR, FONT, SIZE, ETC.) MUST BE FOLLOWED.
6. SIGNFIX ALUMINUM CHANNEL FRAMING SYSTEM SHALL BE USED FOR ALL SIGNS ATTACHED TO SIGNAL POLES AND POSTS.

LOCAL SUPPLIERS:

- J.O. HERBERT COMPANY, INC
  MIDLOTHIAN, VA
- WESTERN REMAC, INC.
  WOODRIDGE, IL

PARTS LISTING:

SIGN CHANNEL	PART #HPN053 (MED. CHANNEL)
SIGN SCREWS	1/4" x 14 x 1" H.W.H. #3 SELF TAPPING WITH NEOPRENE WASHER
BRACKETS	PART #HPN034 (UNIVERSAL) CHANNEL CLAMPS WITH STAINLESS STEEL STRAPPING

OTHER BRANDS OF MOUNTING HARDWARE ARE ACCEPTABLE, BASED UPON THE DEPARTMENT'S APPROVAL AND COMPATIBILITY WITH THE CHANNEL/BRACKET OF THE ABOVE PRODUCT.

MOUNTING LOCATION

ARM OR POLE MOUNTED

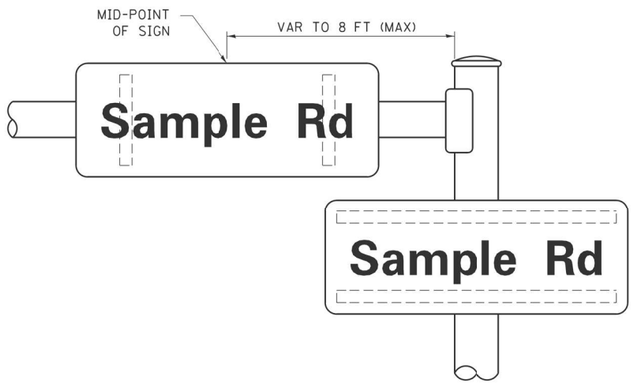

SUPPORTING CHANNELS

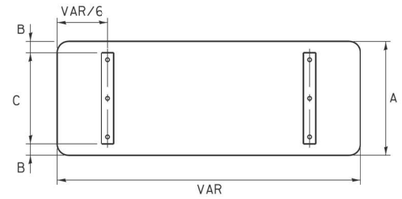

A	B	C
18"	2"	14"
30"	2"	24"

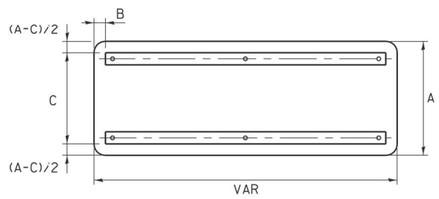

A	B	C
18"	2"	12"
30"	2"	22"

STANDARD ALPHABETS SPACING CHART

(8") UPPER CASE AND (6") LOWER CASE

FHWA SERIES "C"				FHWA SERIES "D"			
CHARACTER	LEFT SPACING (INCH)	WIDTH (INCH)	RIGHT SPACING (INCH)	CHARACTER	LEFT SPACING (INCH)	WIDTH (INCH)	RIGHT SPACING (INCH)
A	0.240	5.122	0.240	A	0.240	6.804	0.240
B	0.880	4.432	0.480	B	0.960	5.446	0.400
C	0.720	4.432	0.720	C	0.800	5.446	0.800
D	0.880	4.432	0.720	D	0.960	5.446	0.800
E	0.880	4.032	0.480	E	0.960	4.962	0.400
F	0.880	4.032	0.240	F	0.960	4.962	0.240
G	0.720	4.432	0.720	G	0.800	5.446	0.800
H	0.880	4.432	0.880	H	0.960	5.446	0.960
I	0.880	1.120	0.880	I	0.960	1.280	0.960
J	0.240	4.032	0.880	J	0.240	5.122	0.960
K	0.880	4.432	0.480	K	0.960	5.604	0.400
L	0.880	4.032	0.240	L	0.960	4.962	0.240
M	0.880	5.234	0.880	M	0.960	6.244	0.960
N	0.880	4.432	0.880	N	0.960	5.446	0.960
O	0.720	4.722	0.720	O	0.800	5.684	0.800
P	0.880	4.432	0.720	P	0.960	5.446	0.240
Q	0.720	4.722	0.720	Q	0.800	5.684	0.800
R	0.880	4.432	0.480	R	0.960	5.446	0.400
S	0.480	4.432	0.480	S	0.400	5.446	0.400
T	0.240	4.032	0.240	T	0.240	4.962	0.240
U	0.880	4.432	0.880	U	0.960	5.446	0.960
V	0.240	4.952	0.240	V	0.240	6.084	0.240
W	0.240	6.084	0.240	W	0.240	7.124	0.240
X	0.240	4.722	0.240	X	0.400	5.446	0.400
Y	0.240	5.122	0.240	Y	0.240	6.884	0.240
Z	0.480	4.432	0.480	Z	0.400	5.446	0.400
a	0.320	3.842	0.640	a	0.400	4.562	0.720
b	0.720	4.032	0.480	b	0.800	4.802	0.480
c	0.480	4.002	0.240	c	0.480	4.722	0.240
d	0.480	4.032	0.720	d	0.480	4.802	0.800
e	0.480	4.032	0.320	e	0.480	4.722	0.320
f	0.320	2.480	0.160	f	0.320	2.882	0.160
g	0.480	4.032	0.720	g	0.480	4.802	0.800
h	0.720	4.032	0.640	h	0.800	4.722	0.720
i	0.720	1.120	0.720	i	0.800	1.280	0.800
j	0.000	2.320	0.720	j	0.000	2.642	0.800
k	0.720	4.322	0.160	k	0.800	5.122	0.160
l	0.720	1.120	0.720	l	0.800	1.280	0.800
m	0.720	6.724	0.640	m	0.800	7.926	0.720
n	0.720	4.032	0.640	n	0.800	4.722	0.720
o	0.480	4.032	0.480	o	0.480	4.882	0.480
p	0.720	4.032	0.480	p	0.800	4.802	0.480
q	0.480	4.032	0.720	q	0.480	4.802	0.800
r	0.720	2.642	0.160	r	0.800	3.042	0.160
s	0.320	3.352	0.240	s	0.320	3.762	0.240
t	0.080	2.832	0.080	t	0.080	3.202	0.080
u	0.640	4.032	0.720	u	0.720	4.722	0.800
v	0.160	4.722	0.160	v	0.160	5.684	0.160
w	0.160	7.524	0.160	w	0.160	9.046	0.160
x	0.000	5.202	0.000	x	0.000	6.244	0.000
y	0.160	4.952	0.160	y	0.160	6.004	0.160
z	0.240	3.352	0.240	z	0.240	4.002	0.240
1	0.720	1.630	0.880	1	0.800	2.000	0.960
2	0.480	4.432	0.480	2	0.800	5.446	0.800
3	0.480	4.432	0.480	3	1.440	5.446	0.800
4	0.240	4.952	0.720	4	0.160	6.004	0.960
5	0.480	4.432	0.480	5	0.800	5.446	0.800
6	0.720	4.432	0.720	6	0.800	5.446	0.800
7	0.240	4.432	0.720	7	0.560	5.446	0.560
8	0.480	4.432	0.480	8	0.800	5.446	0.800
9	0.480	4.432	0.480	9	0.800	5.446	0.800
0	0.720	4.722	0.720	0	0.800	5.684	0.800
-	0.240	2.802	0.240	-	0.240	2.802	0.240

FILE NAME = S:\WP\Design\Manuals and Reference Materials\CADD\Details\ts02.dgn	USER NAME = pociechal	DESIGNED - LP/IP	REVISED -	STATE OF ILLINOIS DEPARTMENT OF TRANSPORTATION
	PLOT SCALE = 50.0000 '/ in.	DRAWN - LP	REVISED -	DISTRICT ONE
Default	PLOT DATE = 9/22/2014	CHECKED - IP	REVISED -	MAST ARM MOUNTED STREET NAME SIGNS
		DATE - 10/01/2014	REVISED -	SCALE: SHEET OF SHEETS STA. TO STA.

F.A.I. RTE.	SECTION	COUNTY	TOTAL SHEETS	SHEET NO.
290	2019-192-B-R	COOK	237	120
	TS-02	CONTRACT NO. 62K65		
	ILLINOIS FED. AID PROJECT			

ts02.dgn 9/22/2014, 12:32:06 PM, Lisenpociechal

GENERAL NOTES:

1. THIS PROJECT INCLUDES THE REPLACEMENT OF SACRAMENTO BOULEVARD BRIDGE DECK AND SUPERSTRUCTURE RESULTING IN THE REPLACEMENT OF UNDER DECK AND OVER DECK LIGHTING. THE UNDER DECK LIGHTING OVER I-290 IS OWNED AND MAINTAINED BY IDOT WHERE AS THE OVER DECK LIGHTING ON THE BRIDGE IS OWNED AND MAINTAINED BY CDOT.

2. THE PROJECT LIMITS ALONG SACRAMENTO BLVD ARE BETWEEN W. VAN BUREN STREET AND W. CONGRESS PARKWAY.

3. THE EXISTING UNDERPASS LIGHTING IS CONNECTED TO EXISTING LIGHTING CONTROLLER "I" WHICH SHALL CONTINUE TO FEED TO EXISTING LIGHTING LUMINAIRE'S AND PROPOSED LIGHTING LUMINAIRE'S DURING AND AFTER CONSTRUCTION.

4. THE EXISTING UNDERPASS LIGHTING SHALL BE REMOVED WHEN THE BRIDGE DECK ALONG WITH BEAMS ARE REMOVED. MAINLINE LIGHTING SHALL PROVIDE LIGHTING FOR THIS PORTION OF THE ROADWAY DURING CONSTRUCTION. THE PROPOSED UNDERPASS LUMINAIRE'S SHALL BE INSTALLED DURING CONSTRUCTION OF THE NEW DECK.

5. THE CONTRACTOR SHALL NOTIFY J.U.L.I.E. TO LOCATE AND MARK/STAKE ALL UNDERGROUND UTILITIES. MEADE ELECTRIC CO. DISTRICT 1 ELECTRICAL MAINTENANCE CONTRACTOR LOCATES IDOT ELECTRICAL EQUIPMENT AND UNDERGROUND CABLES, CALL MEADE ELECTRIC CO. TRANSFER IDOT MAINTAINED EQUIPMENT TO THE CONTRACTOR BEFORE THE START OF ANY WORK. THEIR PHONE NUMBER IS 773-287-7672. THE CONTRACTOR SHALL ALSO CONTACT 811 CHICAGO (DIGGER) AT 312-744-7000 TO LOCATE CITY OF CHICAGO EQUIPMENT AND UNDERGROUND CABLES.

6. THE LIGHTING SYSTEM INSTALLATION SHALL CONFORM TO THE LATEST NEC, IDOT STANDARDS, CDOT STANDARD AND LOCAL CODES.

7. ALL ELECTRICAL EQUIPMENT AND PRODUCT SHALL BE UL LISTED AND LABELED.

8. THE CONTRACTOR SHALL SUBMIT CDOT EQUIPMENT CATALOG CUTS TO:
   CHICAGO DOT
   2 N LASALLE ST, SUITE 1110
   CHICAGO, IL 60602
   CALL (312) 744-3600 TO COORDINATE.

9. THE CONTRACTOR SHALL PICK UP LIGHTING HARDWARE SUPPLIED BY THE CITY AND SALVAGE AT CITY'S DIVISION OF ELECTRICAL OPERATIONS LOCATED AT 2451 S. ASHLAND AVENUE, CHICAGO, IL.

10. THE COST OF DELIVERING SALVAGED LIGHTING HARDWARE TO CITY OF CHICAGO (CDOT) IS INCLUDED IN PAY ITEM 84200500 REMOVAL OF LIGHTING UNIT, SALVAGE.

11. MAINTENANCE OF THE LIGHTING SYSTEMS ON THE BRIDGE AND BENEATH THE BRIDGE SHALL BE INCLUDED IN PAY ITEM X8000003 MAINTENANCE OF LIGHTING SYSTEM.

BILL OF MATERIALS

DESCRIPTION	UNIT	TOTAL	IDOT LIGHTING	CDOT LIGHTING
UNDERGROUND CONDUIT, GALVANIZED STEEL, 2" DIA.	FOOT	60		60
UNDERGROUND CONDUIT, PVC, 2" DIA.	FOOT	240		240
CONDUIT ATTACHED TO STRUCTURE, 1" DIA., PVC COATED GALVANIZED STEEL	FOOT	250	250	
CONDUIT ATTACHED TO STRUCTURE, 3" DIA., PVC COATED GALVANIZED STEEL	FOOT	30	30	
CONDUIT EMBEDDED IN STRUCTURE, 2" DIA., PVC	FOOT	730		730
JUNCTION BOX, STAINLESS STEEL, ATTACHED TO STRUCTURE, 6"X6"X4"	EACH	8	8	
JUNCTION BOX, STAINLESS STEEL, ATTACHED TO STRUCTURE, 12"X10"X6"	EACH	4	4	
JUNCTION BOX, STAINLESS STEEL, ATTACHED TO STRUCTURE, 18"X18"X8"	EACH	2	2	
ELECTRIC CABLE IN CONDUIT, 600V (XLP-TYPE USE) 1/C NO. 10	FOOT	1695	1695	
AERIAL CABLE, 2-1/C NO.6 WITH MESSENGER WIRE	FOOT	362		362
LUMINAIRE, LED, UNDERPASS, SUSPENDED, OUTPUT DESIGNATION D	EACH	8	8	
REMOVAL OF LIGHTING UNIT, SALVAGE	EACH	13		13
REMOVAL OF LIGHTING UNIT, NO SALVAGE	EACH	8	8	
REMOVE EXISTING HANDHOLE	EACH	3		3
CABLE IN CONDUIT, TRIPLEX, 2-1/C NO. 6 AND 1-1/C NO. 8 GROUND	FOOT	970		970
LUMINAIRE (SPECIAL)	EACH	6		6
MAINTENANCE OF LIGHTING SYSTEM	CAL MO	12	12	
LIGHTING UNIT COMPLETE (SPECIAL)	EACH	4		4
MAINTENANCE OF STREET LIGHTING SYSTEM (CITY OF CHICAGO)	L SUM	1		1

LEGEND

- CABLE IN CONDUIT, TRIPLEX, 2-1/C NO. 6 AND 1-1/C NO. 8 GROUND, WITHIN CONDUIT EMBEDDED IN STRUCTURE, 2" DIA PVC (CDOT)
- EXISTING JUNCTION BOX TO BE REMOVED
- EXISTING HANDHOLE TO BE REMOVED
- EXISTING UNDERPASS LUMINAIRE TO BE REMOVED, NO SALVAGE
- PROPOSED LUMINAIRE, LED, UNDERPASS, SUSPENDED, OUTPUT DESIGNATION D (9171 LUMENS MIN.)
- JUNCTION BOX, STAINLESS STEEL, ATTACHED TO STRUCTURE, 6"x6"x4"
- JUNCTION BOX, STAINLESS STEEL, ATTACHED TO STRUCTURE, 12"x10"x6"
- JUNCTION BOX, STAINLESS STEEL ATTACHED TO STRUCTURE, 18"x18"x8" WITH OVERCURRENT PROTECTION
- CDOT EXISTING LIGHTING CONTROLLER, BASE MOUNTED TO REMAIN
- EXISTING CDOT LIGHTING UNIT TO REMAIN
- CDOT EXISTING LIGHTING UNIT TO BE REMOVED AND SALVAGED
- EXISTING COMBINATION SIGNAL/LIGHT POLE TO BE REMOVED
- PROPOSED COMBINATION SIGNAL/LIGHT POLE
- CDOT PROPOSED LIGHTING UNIT MOUNTED ON BRIDGE STRUCTURE
- CDOT PROPOSED LIGHTING UNIT (GROUND MOUNTED)
- CONDUIT ATTACHED TO STRUCTURE (ELECTRIC CABLE WITHIN)
- UNDERGROUND CONDUIT, GALVANIZED STEEL, 2" DIA.
- CABLE IN CONDUIT, TRIPLEX, 2-1/C NO. 6 AND 1-1/C NO. 8 GROUND, WITHIN 2" DIA PVC CONDUIT (CDOT)
- A/C — AERIAL CABLE, 2-1/C NO. 6 WITH MESSENGER WIRE (CDOT)

EL-01

AMES Engineering, Inc.
CONSULTING ENGINEERS
6330 Belmont Road, Suite 4B
Downers Grove, IL 60516

USER NAME = Srahman	DESIGNED - KV/BL	REVISED -
	DRAWN - SR	REVISED -
PLOT SCALE = 40.0000 ' / in.	CHECKED - MH	REVISED -
PLOT DATE = 9/8/2025	DATE - 09-09-2025	REVISED -

STATE OF ILLINOIS
DEPARTMENT OF TRANSPORTATION

GENERAL NOTES, BILL OF MATERIALS AND LEGEND
I-290 AT SACRAMENTO BLVD.

SCALE: NONE | SHEET OF SHEETS | STA. | TO STA.

F.A.I RTE.	SECTION	COUNTY	TOTAL SHEETS	SHEET NO.
290	2019-192-B-R	COOK	237	121
		CONTRACT NO. 62K65		
	ILLINOIS	FED. AID PROJECT		

MODEL: Default
FILE NAME: F:\Projects\1058-Eisenhower IDOT-Collins\Design\Smith-290 Sacramento Blvd\D162K65 EL-01.dgn

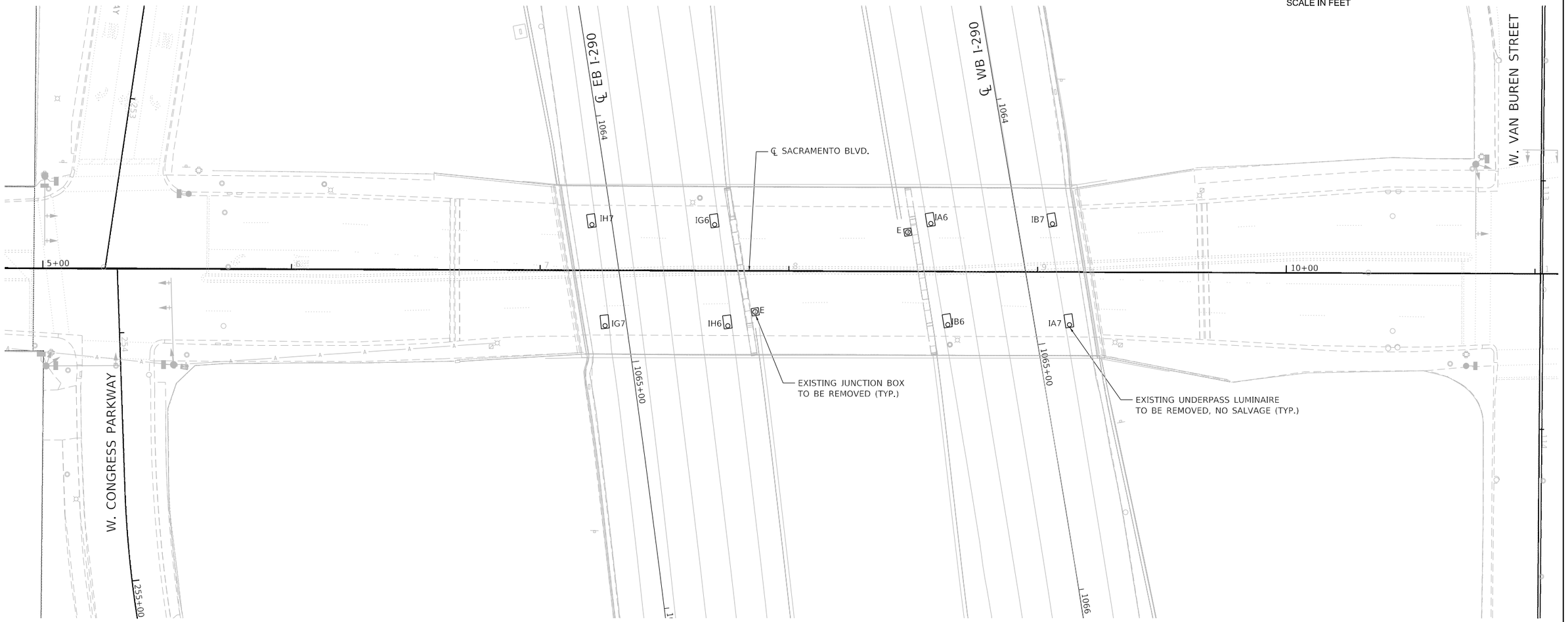

NOTES:

1. FOR GENERAL NOTES, BILL OF MATERIALS AND LEGEND, SEE SHEET EL-01.
2. SOME OF THE EXISTING UNDERPASS LUMINAIRES MAY HAVE BEEN REMOVED PRIOR TO THE START OF THIS CONTRACT. THE ENGINEER SHALL CONFIRM WHEN MAINTENENANCE IS TRANSFERED TO THE CONTRACTOR.

MODEL: Default
FILE NAME: F:\Projects\1058-Elsenhower IDOT-Cdlins\Design\Shts\I-290 Sacramento Blvd\D162K65 EL-02.dgn

AMES Engineering, Inc.
CONSULTING ENGINEERS
6330 Belmont Road, Suite 4B
Downers Grove, IL 60516

USER NAME = Srahman	DESIGNED - KV/BL	REVISED -	
	DRAWN - SR	REVISED -	
PLOT SCALE = 40.000 ' / in.	CHECKED - MH	REVISED -	
PLOT DATE = 9/8/2025	DATE - 09-09-2025	REVISED -	

STATE OF ILLINOIS
DEPARTMENT OF TRANSPORTATION

IDOT REMOVAL UNDERPASS LIGHTING
I-290 AT SACRAMENTO BLVD.

SCALE: 1" : 20' | SHEET 1 OF 1 SHEETS | STA. | TO STA.

F.A.I RTE.	SECTION	COUNTY	TOTAL SHEETS	SHEET NO.
290	2019-192-B-R	COOK	237	122
		CONTRACT NO. 62K65		
	ILLINOIS	FED. AID PROJECT		

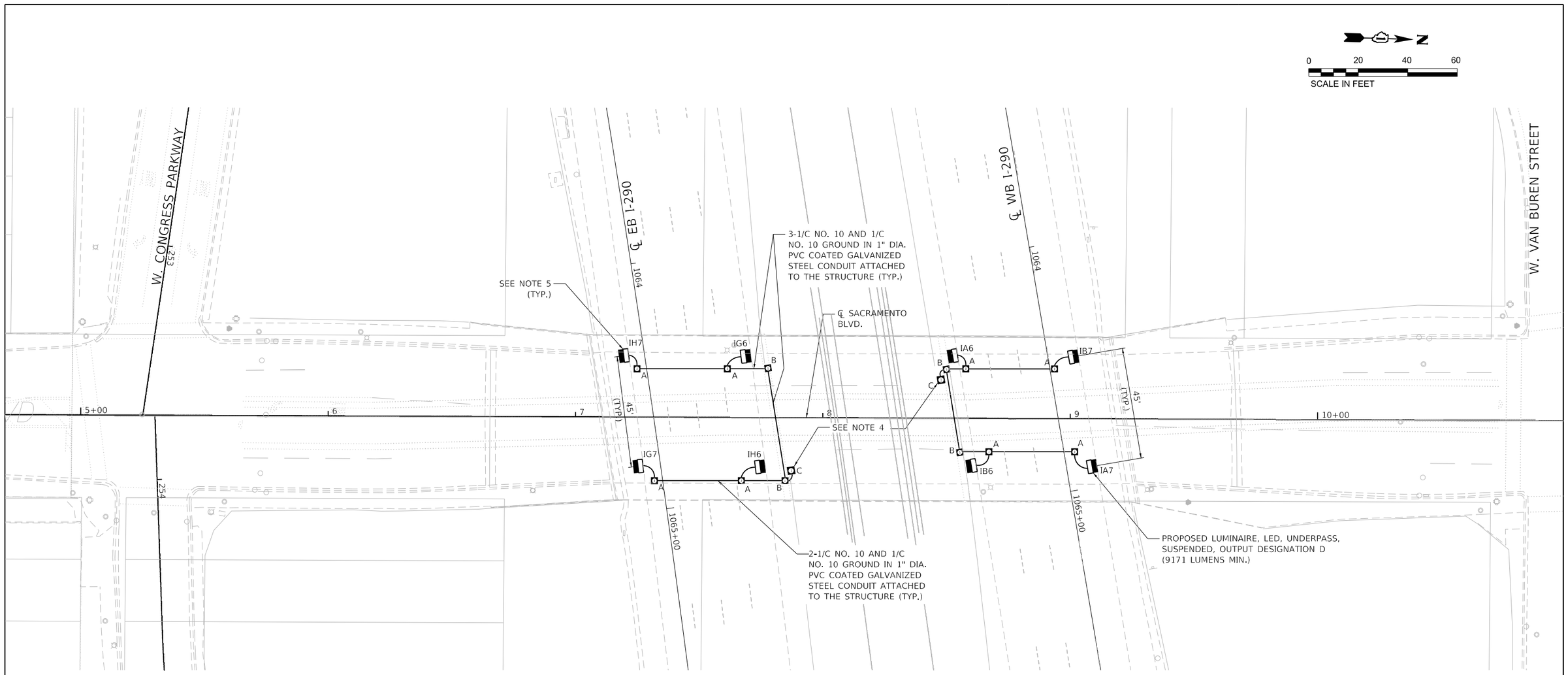

NOTES:

1. FOR GENERAL NOTES, BILL OF MATERIALS AND LEGEND, SEE SHEET EL-01.
2. THE PROPOSED UNDERPASS LUMINAIRES OVER EB I-290 SHALL BE RECONNECTED TO CIRCUITS G, H OF CONTROLLER I (IDOT).
3. THE PROPOSED UNDERPASS LUMINAIRES OVER WB I-290 SHALL BE RECONNECTED TO CIRCUITS A, B OF CONTROLLER I (IDOT).
4. THE PROPOSED JUNCTION BOX SHALL BE ATTACHED TO THE BACK OF PIER. EXISTING FEED FROM CONTROLLER I (IDOT) SHALL BE CONNECTED AT THE NEW JUNCTION BOX. JUNCTION BOX SHALL BE FURNISHED WITH 30A FUSES, FUSE HOLDERS AND NEUTRAL SLUG INSIDE THE JUNCTION BOX.
5. SET BACK IS 2' FROM EDGE OF PAVEMENT TO THE CENTER OF UNDERPASS LUMINAIRE MOUNTING HEIGHT OF THE UNDERPASS LUMINAIRE SHALL BE 16 FT.

LEGEND:

- A JUNCTION BOX, STAINLESS STEEL, ATTACHED TO STRUCTURE, 6"x6"x4"
- B JUNCTION BOX, STAINLESS STEEL, ATTACHED TO STRUCTURE, 12"x10"x6"
- C JUNCTION BOX, STAINLESS STEEL ATTACHED TO STRUCTURE, 18"x18"x8" WITH OVERCURRENT PROTECTION

EL-03

MODEL: Default
FILE NAME: F:\Projects\1058-Eisenhower IDOT-Collins\Design\SMI-290 Sacramento Blvd\D1162K65 EL-03.dgn

AMES Engineering, Inc.
CONSULTING ENGINEERS
6330 Belmont Road, Suite 4B
Downers Grove, IL 60516

USER NAME = Srahman	DESIGNED - KV/BL	REVISED -	
	DRAWN - SR	REVISED -	
PLOT SCALE = 40.000 ' / In.	CHECKED - MH	REVISED -	
PLOT DATE = 9/18/2025	DATE - 09-09-2025	REVISED -	

STATE OF ILLINOIS
DEPARTMENT OF TRANSPORTATION

IDOT PROPOSED UNDERPASS LIGHTING
I-290 AT SACRAMENTO BLVD.

SCALE: 1"=20' | SHEET 1 OF 1 SHEETS | STA. | TO STA.

F.A.I RTE.	SECTION	COUNTY	TOTAL SHEETS	SHEET NO.
290	2019-192-B-R	COOK	237	123
		CONTRACT NO. 62K65		
		ILLINOIS	FED. AID PROJECT	

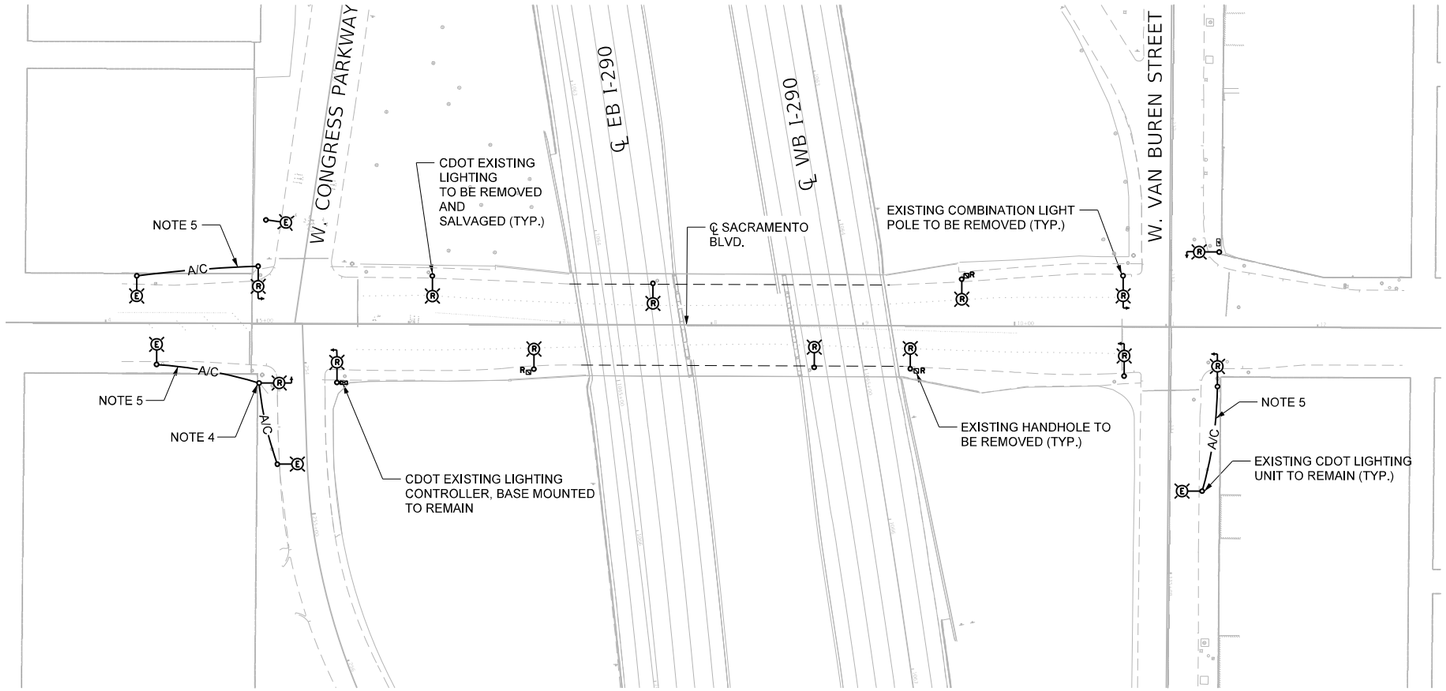

0 50 100 150

SCALE IN FEET

NOTES:

1. FOR GENERAL NOTES, BILL OF MATERIALS AND LEGEND, SEE SHEET EL-01.
2. THE EXISTING CABLE CONNECTION BETWEEN THE EXISTING LIGHTING UNITS TO REMAIN SHALL BE MAINTAINED.
3. THE EXISTING LIGHTING UNITS SHALL BE REMOVED IN COORDINATION WITH PROPOSED STAGING OF CONSTRUCTION.
4. THE EXISTING PARKING LOT FLOOD LIGHT AND THE EXISTING CAMERA WITH THE ASSOCIATED EQUIPMENT AND ACCESSORIES ON THE EXISTING COMBINATION POLE SHALL BE DISCONNECTED AND SALVAGED FOR RECONNECTING TO THE NEW COMBINATION POLE. THE CONTRACTOR SHALL COORDINATE IN THE FIELD. THE EXISTING EQUIPMENT IS OWNED BY CDOT.
5. THE EXISTING AERIAL CABLE SHALL BE DISCONNECTED FROM THE EXISTING COMBINATION POLES AND NEW AERIAL CABLE SHALL BE INSTALLED TO THE NEW COMBINATION POLES.
6. FOR REMOVAL OF COMBINATION POLES, SEE TRAFFIC SIGNAL SHEETS.

AMES Engineering, Inc.
CONSULTING ENGINEERS
6330 Belmont Road, Suite 4B
Downers Grove, IL 60516

USER NAME = Srahman	DESIGNED - KV/BL	REVISED -
	DRAWN - SR	REVISED -
PLOT SCALE = 100.000 ' / in.	CHECKED - MH	REVISED -
PLOT DATE = 9/8/2025	DATE - 09-09-2025	REVISED -

STATE OF ILLINOIS
DEPARTMENT OF TRANSPORTATION

CDOT REMOVAL LIGHTING
I-290 AT SACRAMENTO BLVD.

SCALE: 1"=50' | SHEET 1 OF 1 SHEETS | STA. | TO STA.

F.A.I RTE.	SECTION	COUNTY	TOTAL SHEETS	SHEET NO.
290	2019-192-B-R	COOK	237	124
		CONTRACT NO. 62K65		
	ILLINOIS	FED. AID PROJECT		

MODEL: Default
FILE NAME: F:\Projects\1058-Eisenhower IDOT-Collins\Design\SHI-290 Sacramento Blvd\D162K65 EL-04.dgn

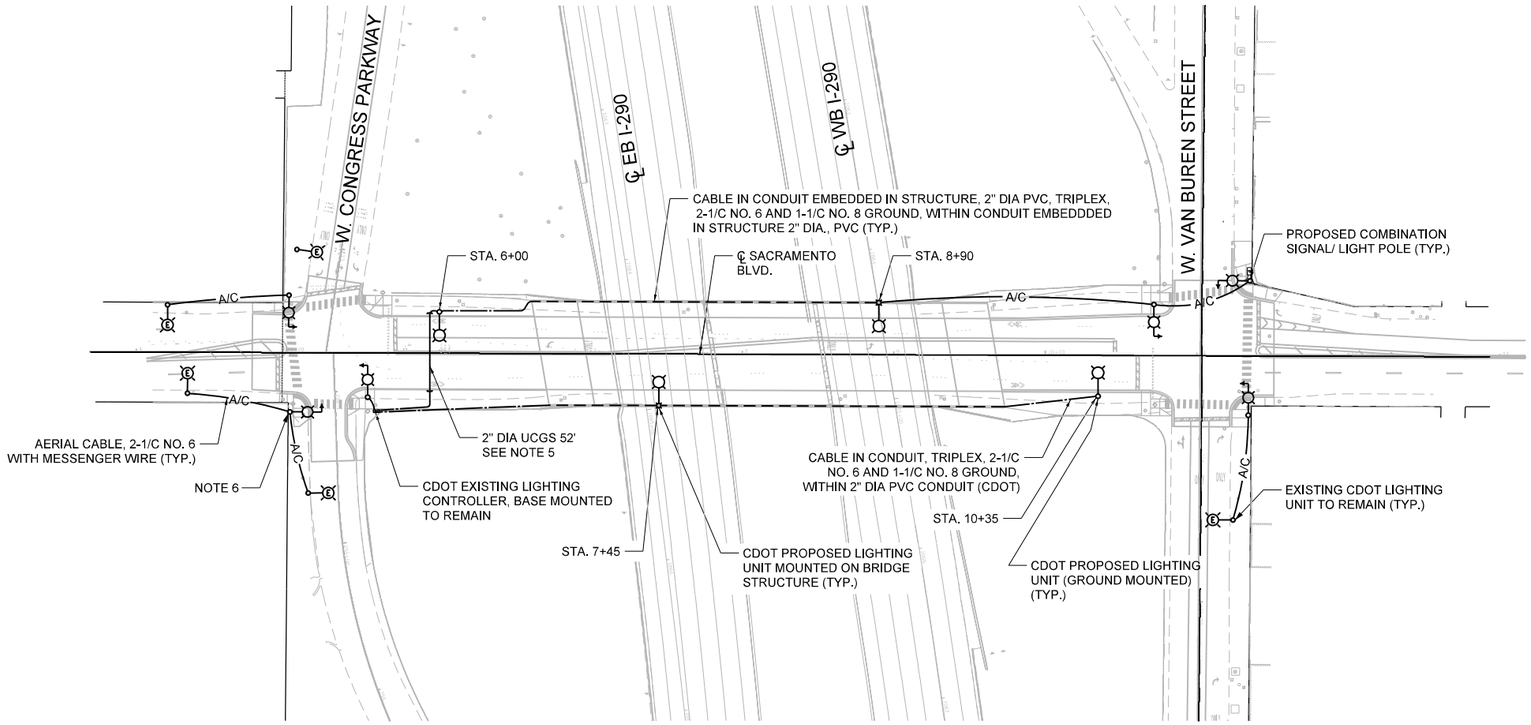

NOTES:

1. FOR GENERAL NOTES, BILL OF MATERIALS AND LEGEND, SEE SHEET EL-01.
2. THE CIRCUITS SHALL BE RECONNECTED TO THE EXISTING UNITS FED FROM THE CONTROLLER.
3. UCGS STANDS FOR UNDERGROUND CONDUIT, GALVANIZED STEEL.
4. SET BACK FOR GROUND MOUNTED LIGHTING UNITS IS 3' FROM FACE OF CURB TO THE CENTER OF THE POLE.
5. CONDUITS DENOTED BY "UCGS" SHALL BE DIRECTLY TRENCHED.
6. THE EXISTING PARKING LOT FLOOD LIGHT AND THE EXISTING CAMERA WITH THE ASSOCIATED EQUIPMENT AND ACCESSORIES SHALL BE REINSTALLED AND CONNECTED ON THE NEW COMBINATION POLE. THE CONTRACTOR SHALL COORDINATE WITH CDOT IN THE FIELD.

AMES Engineering, Inc.
CONSULTING ENGINEERS
6330 Belmont Road, Suite 4B
Downers Grove, IL 60516

USER NAME = Srahman	DESIGNED - KV/BL	REVISED -	
	DRAWN - SR	REVISED -	
PLOT SCALE = 100.000 ' / in.	CHECKED - MH	REVISED -	
PLOT DATE = 9/8/2025	DATE - 09-09-2025	REVISED -	

STATE OF ILLINOIS
DEPARTMENT OF TRANSPORTATION

CDOT PROPOSED LIGHTING
I-290 AT SACRAMENTO BLVD.

SCALE: 1"=50' | SHEET 1 OF 1 SHEETS | STA. | TO STA.

F.A.I RTE.	SECTION	COUNTY	TOTAL SHEETS	SHEET NO.
290	2019-192-B-R	COOK	237	125
		CONTRACT NO. 62K65		
	ILLINOIS FED. AID PROJECT			

MODEL: Default
FILE NAME: F:\Projects\1059-4\Eisenhower IDOT-Collins\Design\Smith-290 Sacramento Blvd\D162K65 EL-05.dgn

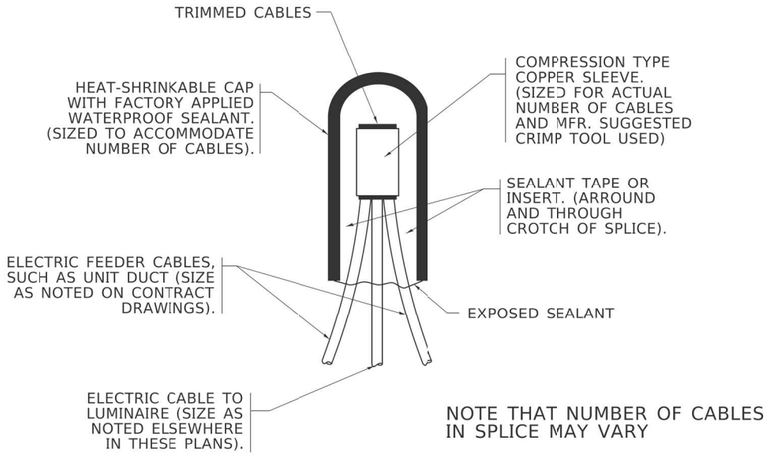

NOTE THAT NUMBER OF CABLES IN SPLICE MAY VARY

TYPICAL SPLICE DETAIL

N.T.S.

IDOT DETAILS

EL-06

MODEL: Default
FILE NAME: F:\Projects\1064\Eisenhower IDOT-Collins\Design\Shts\I-290 Sacramento Blvd\D162K65 EL-06.dgn

AMES Engineering, Inc. CONSULTING ENGINEERS 6330 Belmont Road, Suite 4B Downers Grove, IL 60516	USER NAME = Srahman	DESIGNED - KV/BL	REVISED -	STATE OF ILLINOIS DEPARTMENT OF TRANSPORTATION	MISC. ELECTRICAL DETAILS A I-290 AT SACRAMENTO BLVD.
		DRAWN - SR	REVISED -		
	PLOT SCALE = 2,000 ' / in.	CHECKED - MH	REVISED -		
	PLOT DATE = 9/8/2025	DATE - 09-09-2025	REVISED -		SCALE: SHEET OF SHEETS STA. TO STA.

F.A.I RTE.	SECTION	COUNTY	TOTAL SHEETS	SHEET NO.
290	2019-192-B-R	COOK	237	126
BE-702		CONTRACT NO. 62K65		
	ILLINOIS FED. AID PROJECT			

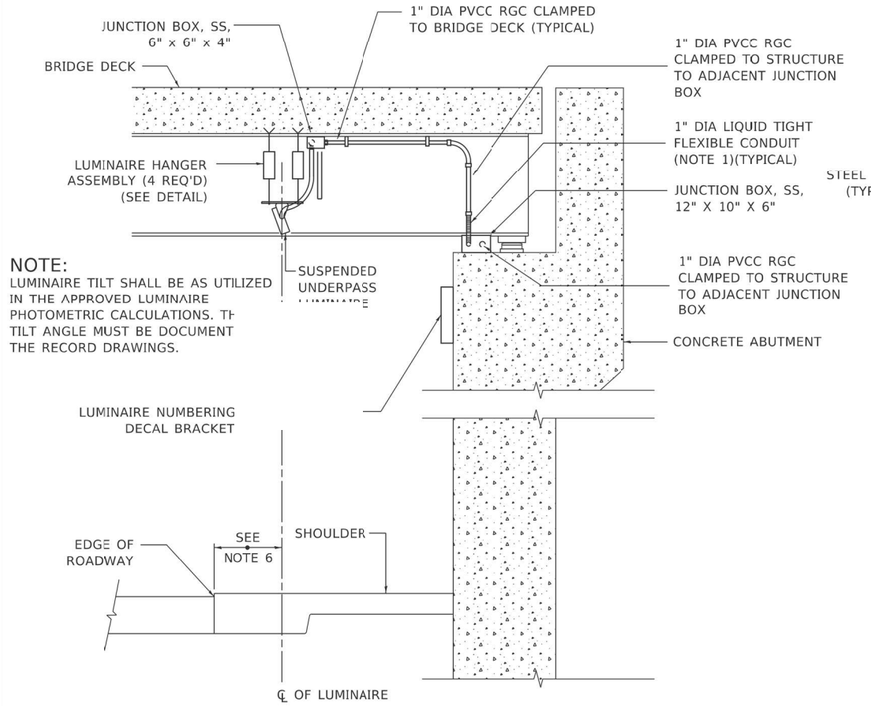

NOTE:
LUMINAIRE TILT SHALL BE AS UTILIZED IN THE APPROVED LUMINAIRE PHOTOMETRIC CALCULATIONS. TH TILT ANGLE MUST BE DOCUMENT THE RECORD DRAWINGS.

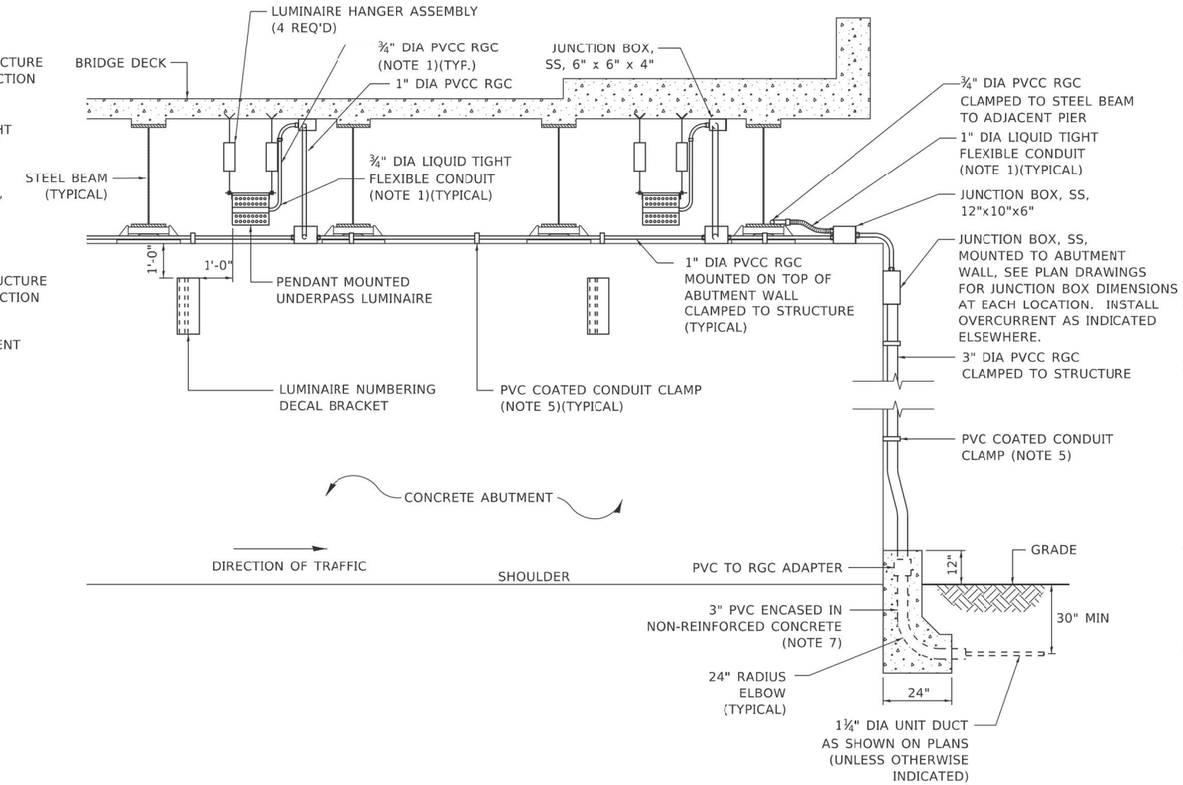

NOTES:

1. LIQUID TIGHT FLEXIBLE METAL CONDUIT, MAXIMUM LENGTH 6'-0", TYPICAL FOR EACH INSTANCE AS SHOWN. PROVIDE PVC COATED RIGID GALVANIZED STEEL CONDUIT AS REQUIRED NOT TO EXCEED 6'-0" OF FLEXIBLE LIQUID TIGHT METAL CONDUIT. LIQUID TIGHT FLEXIBLE METAL CONDUIT WILL BE INCLUDED IN THE COST OF THE CONDUIT ATTACHED TO STRUCTURE, OF THE CORRESPONDING DIA., GALVANIZED STEEL, PVC COATED PAY ITEM EXCEPT THAT " DIA. CONDUIT AND " DIA. FLEXIBLE CONDUIT SHALL BE INCLUDED IN THE COST OF UNDERPASS LUMINAIRE INSTALLATION.
2. SEE UNDERPASS LIGHTING PLANS FOR INSTALLATION LOCATION OF UNDERPASS LIGHTING LUMINAIRES.
3. THE CONTRACTOR SHALL USE APPROVED SINGLE COIL FLARED LOOP INSERTS WHEN SUSPENDED MOUNTING AN UNDERPASS LUMINAIRE TO A NEW BRIDGE DECK. THE FLARED LOOP INSERTS MUST BE CAST INTO THE CONCRETE DECK. THE CONTRACTOR IS RESPONSIBLE FOR LOCATING AND COORDINATING THE INSERT LOCATIONS FOR MOUNTING THE UNDERPASS LIGHTING SYSTEM AS SHOWN ON THE PLANS WITH THE BRIDGE DECK CONTRACTOR. SEE DETAIL.
4. THE UNDERPASS LUMINAIRE HANGER ASSEMBLY COMPLETE WITH HEAVY DUTY ANCHORS/INSERTS AND ALL APPLICABLE HARDWARE SHALL BE INCLUDED IN THE COST OF THE UNDERPASS LUMINAIRE PAY ITEM.
5. SECURE THE CONDUIT WITH PVC COATED CONDUIT CLAMPS OR CONDUIT BEAM CLAMPS AS SHOWN AT 5'-0" INTERVALS FOR LATERALS AND WITHIN 2'-0" MAXIMUM FROM ANY JUNCTION BOX, FLEXIBLE CONDUIT, OR CHANGE IN DIRECTION. ALL PVC COATED CONDUIT CLAMPS OR BEAM CLAMPS SHALL BE INCLUDED WITH THE COST OF THE "CONDUIT ATTACHED TO STRUCTURE, OF THE CORRESPONDING DIA., GALVANIZED STEEL, PVC COATED" PAY ITEM.
6. ALL UNDERPASS LUMINAIRES MUST BE CENTERED IN THE BEAM SPACE AS INDICATED ON THE PLANS UNLESS OTHERWISE DIRECTED BY THE ENGR. LUMINAIRE SETBACK SHALL BE AS INDICATED IN PLANS FOR EACH SPECIFIC UNDERPASS
7. THE CONCRETE ENCASED CONDUIT TRANSITION SHALL BE INCLUDED IN THE COST OF THE GALVANIZED RIGID STEEL CONDUIT PAY ITEMS.
8. ALL CONDUIT ATTACHED TO STRUCTURE SHALL BE PVC COATED RIGID STEEL CONDUIT (PVCC RGC) TYPICAL.
9. IN NO INSTANCE SHALL ANY UNDERPASS LUMINAIRE OR ANY OTHER ELECTRICAL EQUIPMENT BE INSTALLED BELOW THE ELEVATION OF THE BOTTOM OF THE BRIDGE BEAM WHEN OVER ANY PAVEMENT (ROADWAY OR SHOULDER).

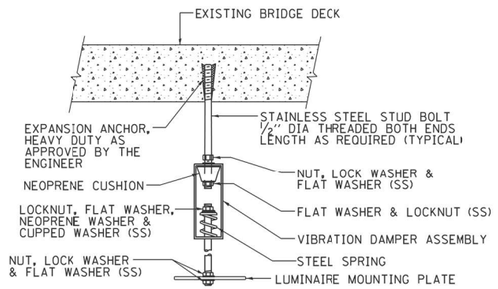

EXISTING BRIDGE DECK INSTALLATION

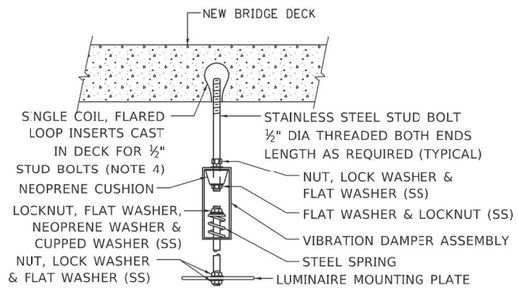

NEW BRIDGE DECK INSTALLATION

TYPICAL LUMINAIRE HANGER ASSEMBLY DETAILS

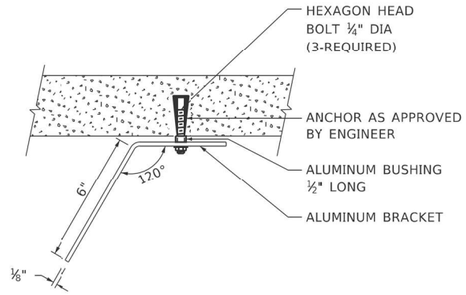

TOP VIEW

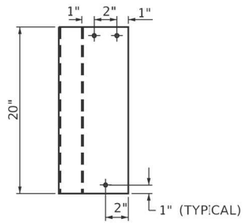

ELEVATION

LUMINAIRE NUMBERING DECAL BRACKET

NOT TO SCALE



PVC COATED CONDUIT BEAM CLAMP
NOT TO SCALE

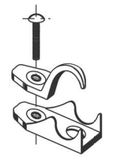

PVC COATED CONDUIT CLAMP
NOT TO SCALE

IDOT DETAILS

EL-07

MODEL: Default
FILE NAME: F:\Projects\1064\Elsenhower IDOT-Collins\Design\Shtd-290 Sacramento Blvd\D162K65 EL-07.dgn

AMES Engineering, Inc. CONSULTING ENGINEERS 6330 Belmont Road, Suite 4B Downers Grove, IL 60516	USER NAME = Srahman	DESIGNED - KV/BL	REVISED -	STATE OF ILLINOIS DEPARTMENT OF TRANSPORTATION	PIER /ABUTMENT MOUNTED LED UNDERPASS LUMINAIRE INSTALLED DETAILS
		DRAWN - SR	REVISED -		
	PLOT SCALE = 2.000 ' / in.	CHECKED - MH	REVISED -		SCALE: SHEET OF SHEETS STA. TO STA.
	PLOT DATE = 9/8/2025	DATE - 09-09-2025	REVISED -		

F.A.I RTE.	SECTION	COUNTY	TOTAL SHEETS	SHEET NO.
290	2019-192-B-R	COOK	237	127
BE-901		CONTRACT NO. 62K65		
	ILLINOIS FED. AID PROJECT			

District 7
Atlas I-23

Light Fixtures
- Cobrahead
- Piggy-Back
- Flood
- Aviation / Other / Null

Light Structures
- Alley
- Private
- Street
- Viaduct

Ornamental Styles
- Single-Mast Gateway
- Double-Mast Gateway
- Single Post-Top Acorn
- Double Post-Top Acorn
- Multiple Post-Top Acorn
- Six-Globe Pendant

Circuitry
- Segment
- Feed
- (12) Controller
- Service

Chicago Department of Transportation (CDOT)
Division of Electrical Operations (DEO)
and Globetrotters Engineering Corporation (GEC)

Data Sources:
CDOT-DEO SDE Geodatabase, **Feb. 2, 2023**
Street Light Vision, **Feb. 2, 2023**

0 200 Feet

N

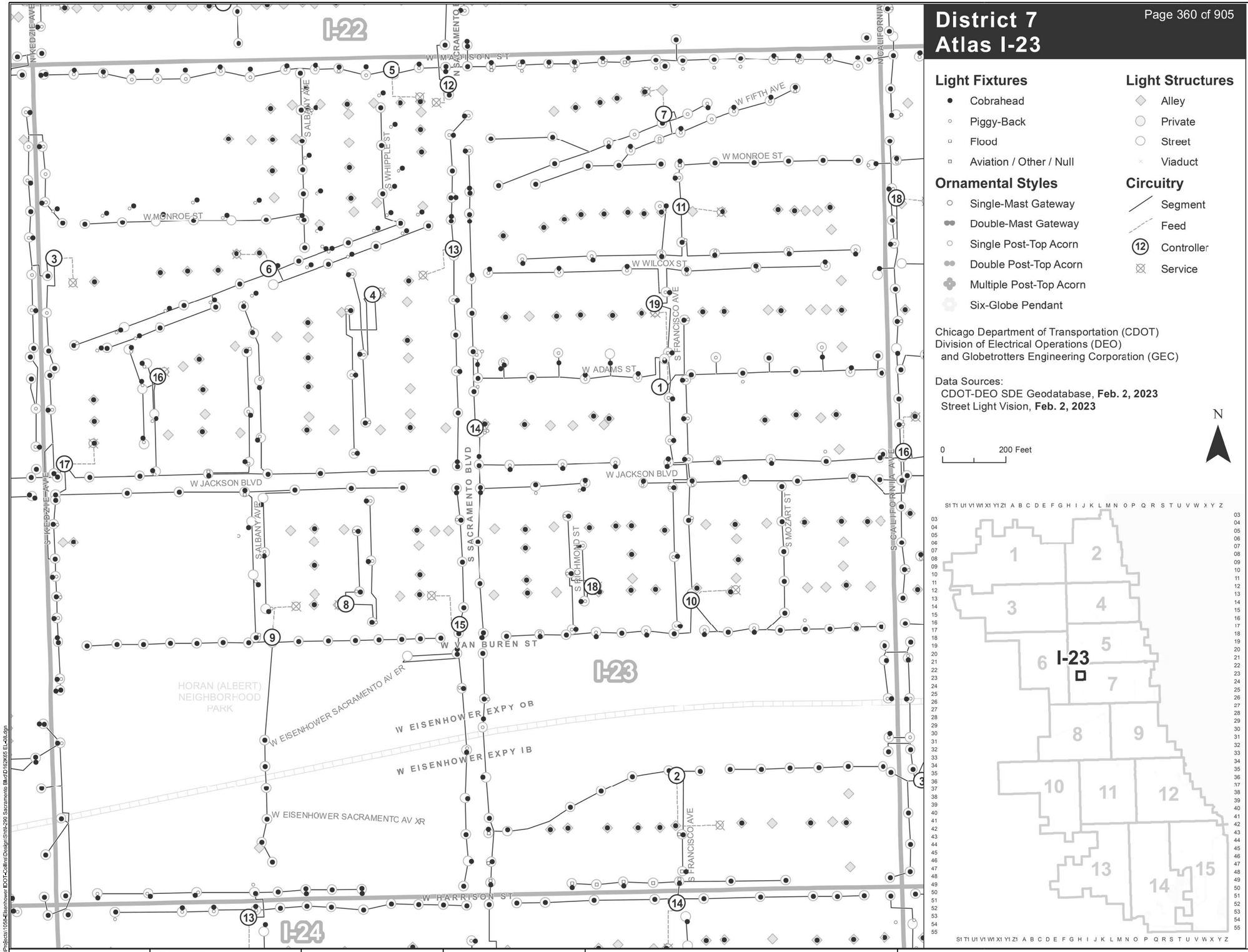

FOR INFORMATION ONLY

EL-08

MODEL: Default
FILE NAME: F:\Projects\10584\Eisenhower IDOT-Collins\Design\Sht\I-290 Sacramento Blvd D1623K65 EL-08.dgn

AMES Engineering, Inc. CONSULTING ENGINEERS 6330 Belmont Road, Suite 4B Downers Grove, IL 60516	USER NAME = Srahman	DESIGNED - KV/BL	REVISED -
		DRAWN - SR	REVISED -
	PLOT SCALE = 2,000 ' / in.	CHECKED - MH	REVISED -
	PLOT DATE = 9/8/2025	DATE - 09-09-2025	REVISED -

STATE OF ILLINOIS
DEPARTMENT OF TRANSPORTATION

ATLAS I-23 DISTRICT 7
I-290 AT SACRAMENTO BLVD.

SCALE: | SHEET OF SHEETS | STA. | TO STA.

F.A.I RTE.	SECTION	COUNTY	TOTAL SHEETS	SHEET NO.
290	2019-192-B-R	COOK	237	128
		CONTRACT NO. 62K65		
		ILLINOIS FED. AID PROJECT		

ROUTE NO	SEC	COUNTY	TOTAL SHEETS	SHEET NO
FAI 290	*	COOK	221	134
STA		TO STA		
FED ROAD DIST NO 7		ILLINOIS	PROJECT [redacted]	

* 1977-241-R

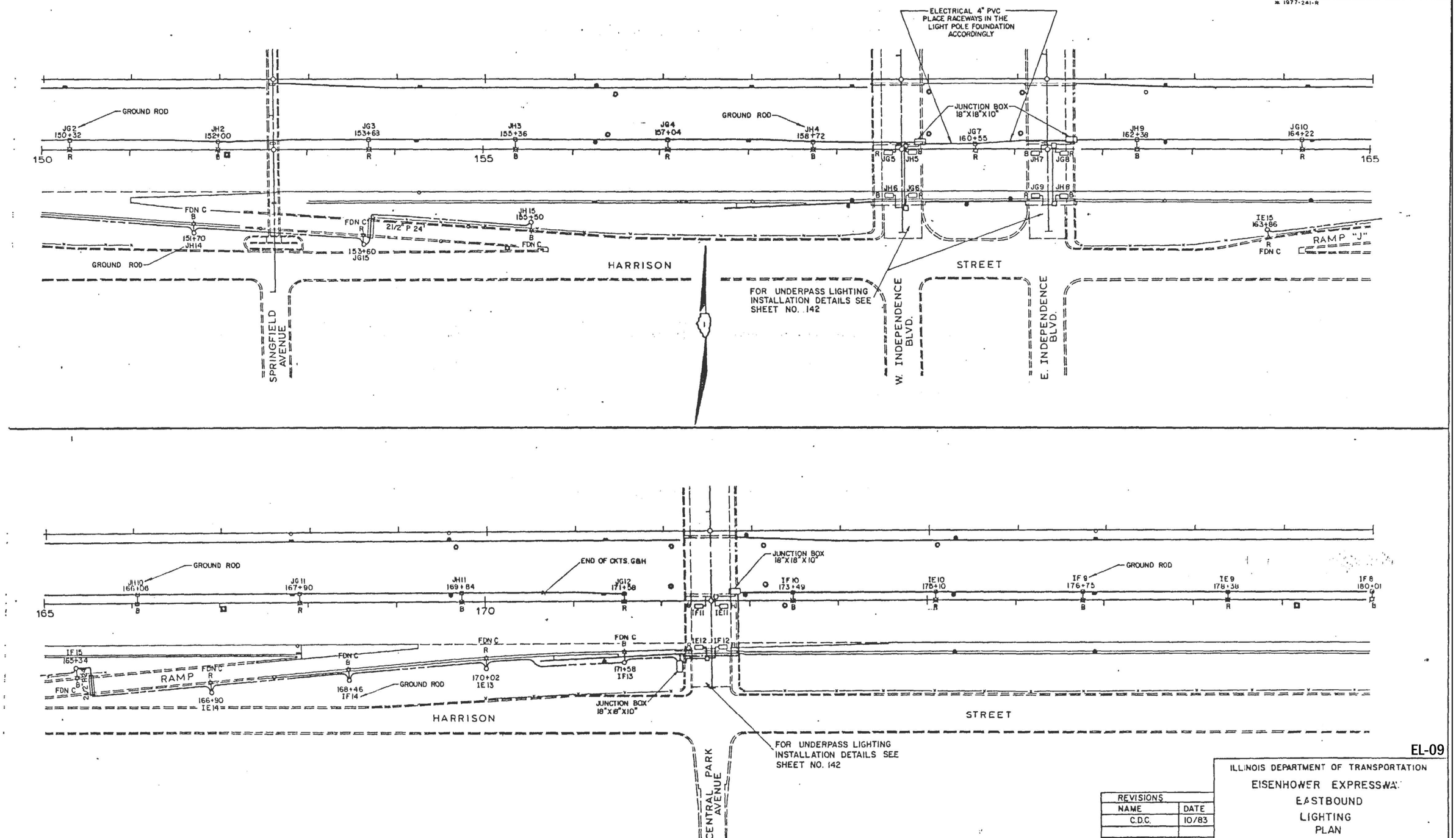

EL-09

REVISIONS	
NAME	DATE
C.D.C.	10/83

ILLINOIS DEPARTMENT OF TRANSPORTATION
EISENHOWER EXPRESSWAY
EASTBOUND
LIGHTING
PLAN

SCALE:
DRAWN BY LRS
DATE
CHECKED BY RLP

FOR INFORMATION ONLY

MODEL: Default
FILE NAME: F:\Projects\1058-Eisenhower IDOT-Collins\Design\Sht\I-290 Sacramento Blvd\D162K65 EL-09.dgn

AMES Engineering, Inc.
CONSULTING ENGINEERS
6330 Belmont Road, Suite 4B
Downers Grove, IL 60516

USER NAME = Srahman	DESIGNED - KV/BL	REVISED -	
	DRAWN - SR	REVISED -	
PLOT SCALE = 2,000 ' / in.	CHECKED - MH	REVISED -	
PLOT DATE = 9/8/2025	DATE - 09-09-2025	REVISED -	

STATE OF ILLINOIS
DEPARTMENT OF TRANSPORTATION

I-290 AT SACRAMENTO BLVD.

SCALE: SHEET OF SHEETS STA. TO STA.

F.A.I RTE.	SECTION	COUNTY	TOTAL SHEETS	SHEET NO.
290	2019-192-B-R	COOK	237	129
		CONTRACT NO. 62K65		
		ILLINOIS	FED. AID PROJECT	

ROUTE NO	SEC	COUNTY	TOTAL SHEETS	SHEET NO
F.A.I. 290	*	COOK	246	155
STA		TO STA		
FED ROAD DIST NO 7	ILLINOIS	PROJECT IR-1-290		

*2831-R(80)

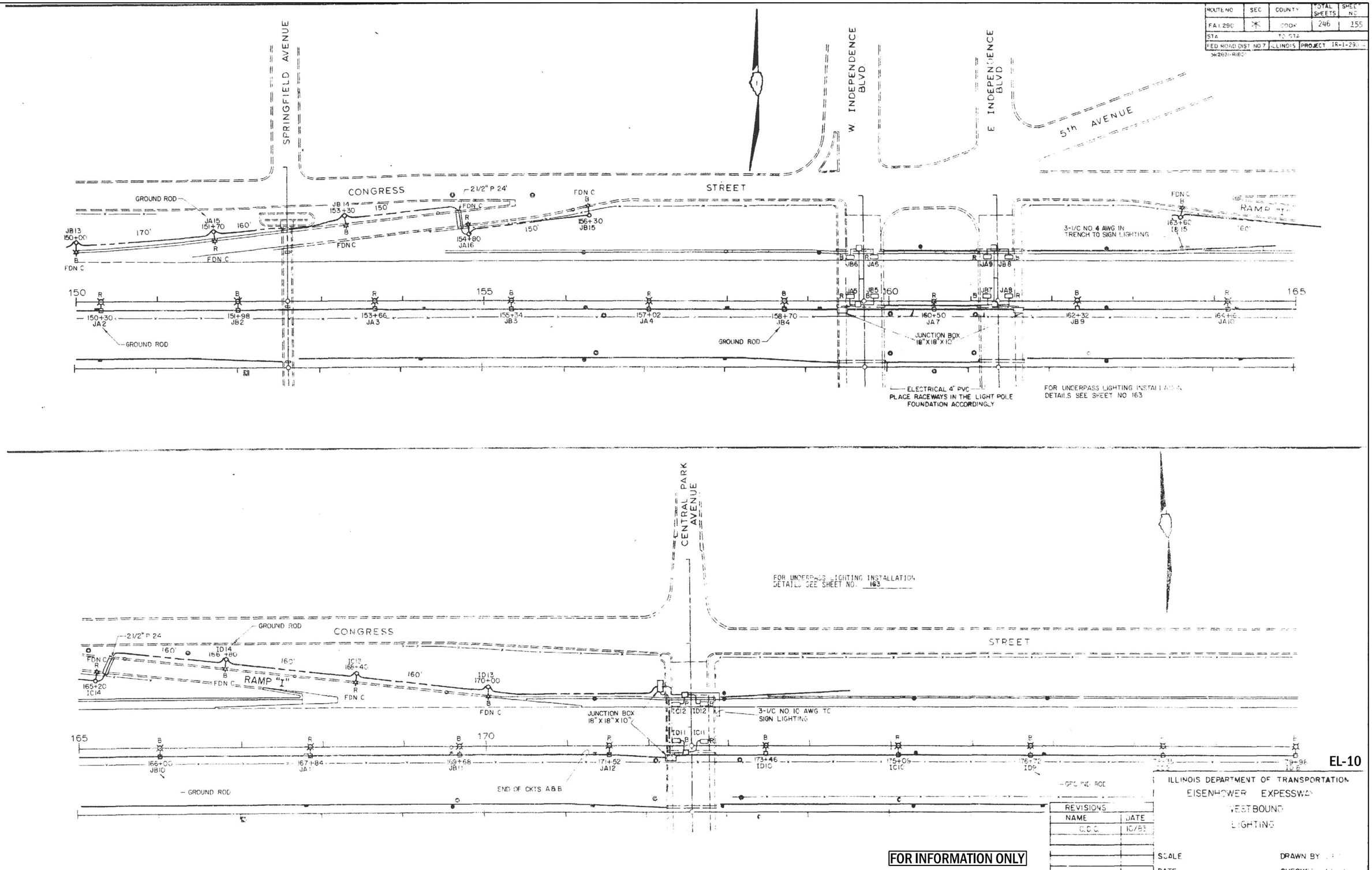

EL-10

REVISIONS	
NAME	DATE
C.D.C.	10/83

ILLINOIS DEPARTMENT OF TRANSPORTATION
EISENHOWER EXPESSWAY
WESTBOUND
LIGHTING

SCALE
DRAWN BY
DATE
CHECKED

FOR INFORMATION ONLY

MODEL: Default
FILE NAME: F:\Projects\1058-Eisenhower IDOT-Collins\Design\Sht\I-290 Sacramento Blvd\D162K65 EL-10.dgn

AMES Engineering, Inc. CONSULTING ENGINEERS 6330 Belmont Road, Suite 4B Downers Grove, IL 60516	USER NAME = Srahman	DESIGNED - KV/BL	REVISED -	STATE OF ILLINOIS DEPARTMENT OF TRANSPORTATION	I-290 AT SACRAMENTO BLVD.
		DRAWN - SR	REVISED -		
	PLOT SCALE = 2.000 ' / in.	CHECKED - MH	REVISED -		
	PLOT DATE = 9/8/2025	DATE - 09-09-2025	REVISED -		SCALE: SHEET OF SHEETS STA. TO STA.

F.A.I RTE.	SECTION	COUNTY	TOTAL SHEETS	SHEET NO.
290	2019-192-B-R	COOK	237	130
		CONTRACT NO. 62K65		
		ILLINOIS	FED. AID PROJECT	

ROUTE NO	SEC	COUNTY	TOTAL SHEETS	SHEET NO
F.I.A 290	*	COOK	221	135
STA		TO STA		
FED ROAD DIST NO 7	ILLINOIS	PROJECT		

* 1977-241-R

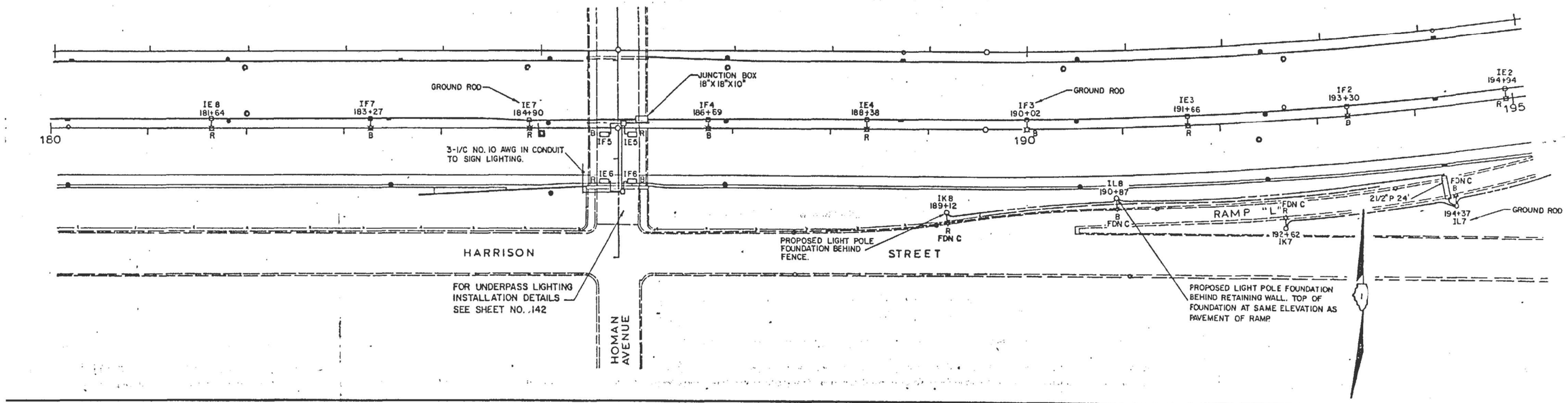

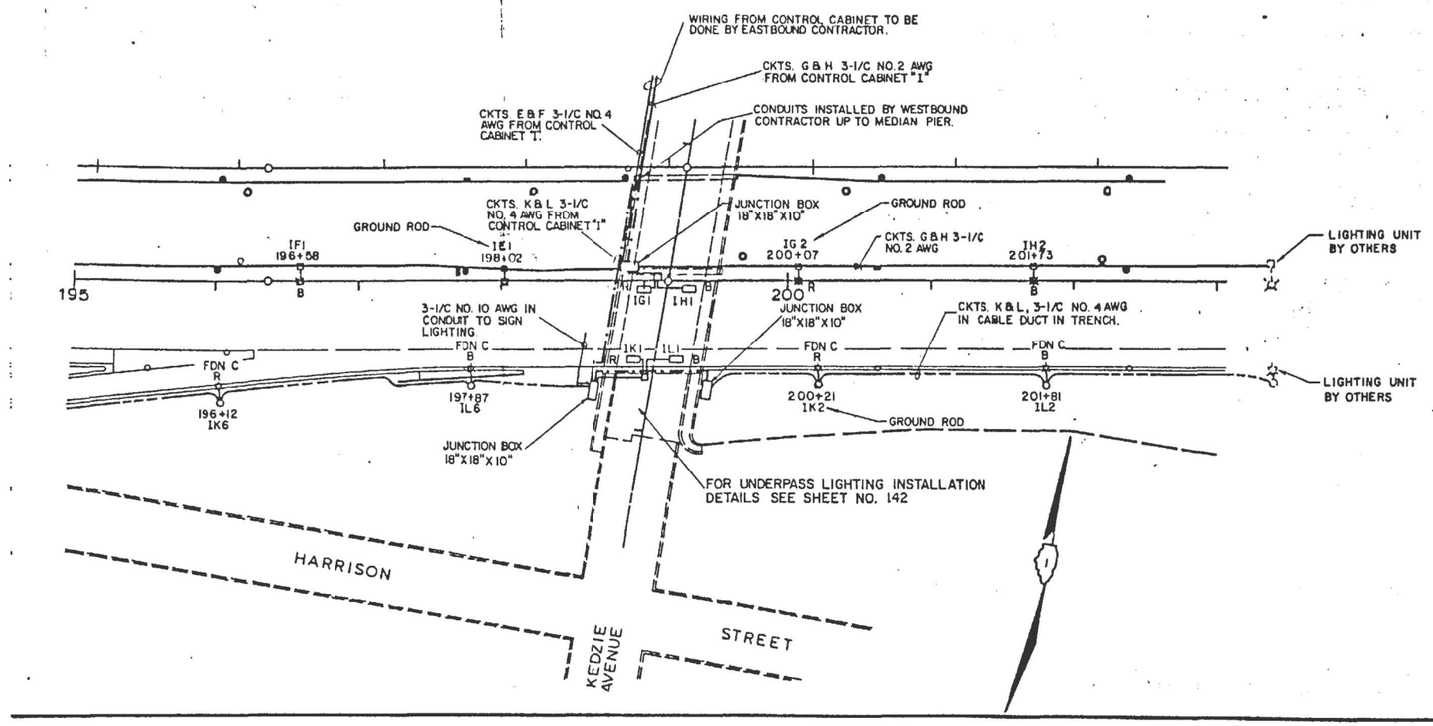

EL-11

REVISIONS	
NAME	DATE
C.D.C.	10/83

FOR INFORMATION ONLY

ILLINOIS DEPARTMENT OF TRANSPORTATION

EISENHOWER EXPRESSWAY

EASTBOUND

LIGHTING

PLAN

SCALE: DRAWN BY L.R.S.

DATE CHECKED BY R.L.P.

MODEL: Default
FILE NAME: P:\Projects\1058-Eisenhower IDOT-Collins\Design\Smith-290 Sacramento Blvd\D162K65 EL-11.dgn

AMES Engineering, Inc.
CONSULTING ENGINEERS
6330 Belmont Road, Suite 4B
Downers Grove, IL 60516

USER NAME = Srahman	DESIGNED - KV/BL	REVISED -	STATE OF ILLINOIS DEPARTMENT OF TRANSPORTATION	I-290 AT SACRAMENTO BLVD.
	DRAWN - SR	REVISED -		
PLOT SCALE = 2.000 ' / in.	CHECKED - MH	REVISED -		SCALE: SHEET OF SHEETS STA. TO STA.
PLOT DATE = 9/8/2025	DATE - 09-09-2025	REVISED -		

F.A.I RTE.	SECTION	COUNTY	TOTAL SHEETS	SHEET NO.
290	2019-192-B-R	COOK	237	131
		CONTRACT NO. 62K65		
	ILLINOIS	FED. AID PROJECT		

ROUTE NO	SEC	COUNTY	TOTAL SHEETS	SHEET NO
FAI 290	*	COOK	246	151
STA		TO STA		
FED ROAD DIST NO 7	ILLINOIS	PROJECT	IR-1-290-4	

* 289-RTR

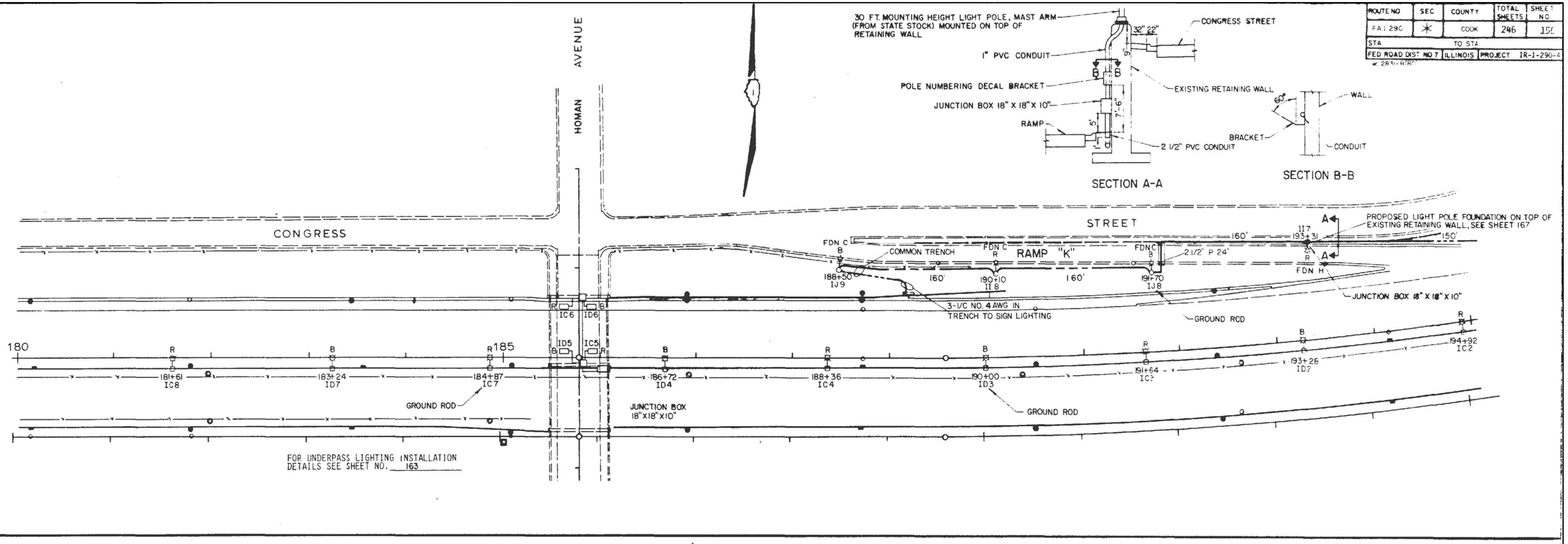

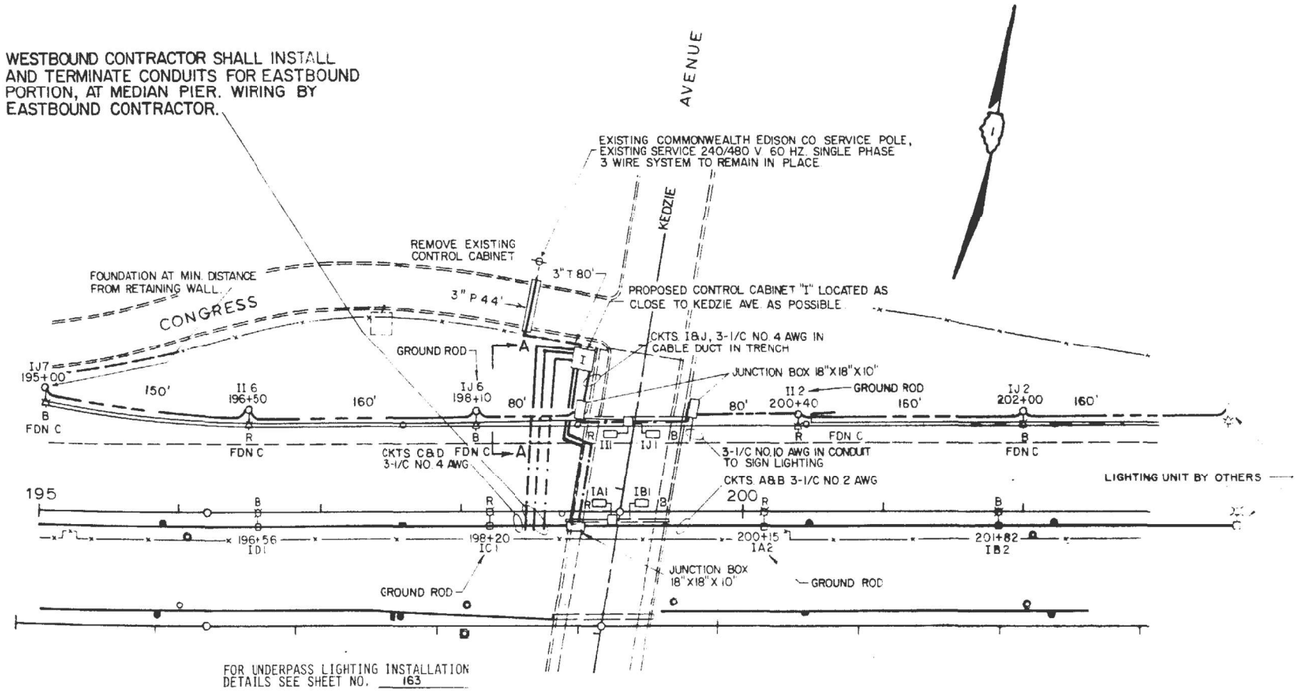

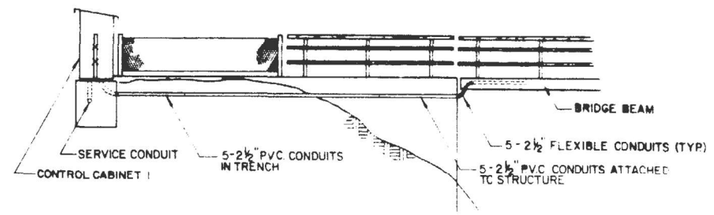

SECTION A – A

EL-12

REVISIONS	
NAME	DATE
C.D.C.	10/83

FOR INFORMATION ONLY

ILLINOIS DEPARTMENT OF TRANSPORTATION
EISENHOWER EXPRESSWAY
WESTBOUND
LIGHTING

SCALE
DRAWN BY L.R.S.
DATE
CHECKED BY R.L.P.

F.A.I RTE.	SECTION	COUNTY	TOTAL SHEETS	SHEET NO.
290	2019-192-B-R	COOK	237	132
		CONTRACT NO. 62K65		
		ILLINOIS	FED. AID PROJECT	

MODEL: Default
FILE NAME: F:\Projects\10584\Eisenhower IDOT-Collins\Design\Shts\290 Sacramento Blvd\D1626X65 EL-12.dgn

AMES Engineering, Inc.
CONSULTING ENGINEERS
6330 Belmont Road, Suite 4B
Downers Grove, IL 60516

USER NAME = Srahman	DESIGNED - KV/BL	REVISED -
	DRAWN - SR	REVISED -
PLOT SCALE = 2,000 ' / in.	CHECKED - MH	REVISED -
PLOT DATE = 9/8/2025	DATE - 09-09-2025	REVISED -

STATE OF ILLINOIS
DEPARTMENT OF TRANSPORTATION

I–290 AT SACRAMENTO BLVD.

SCALE: | SHEET OF SHEETS | STA. | TO STA.

ROUTE NO	SECTION	COUNTY	TOTAL SHEETS	SHEET NO.
FAI-290	1977 242-R	COOK	197	143
FED ROAD DIST NO 7	ILLINOIS	PROJECT		

LEGEND

- LIGHTING UNIT AND BARRIER WALL FOUNDATION: 47.5 FT. MOUNTING HEIGHT, 6 FT. MAST ARM, 400 WATT HIGH PRESSURE SODIUM, M-C-III, LUMINAIRE
- 4" PVC RACEWAY IN BARRIER WALL WITH 3-1/C, TYPE XHHW ELECTRIC CABLES IN 1-1/4" CABLE DUCT AND NO. 6 AWG GROUNDING CONDUCTOR, IN EACH RUN
- 3-1,000 WATT HIGH PRESSURE SODIUM, M-C-III LUMINAIRES, 100 FT. MOUNTING HEIGHT HIGH MAST POLE AND FOUNDATION
- RELOCATED 42 FT. MOUNTING HEIGHT POLE SHAFT AND ARM WITH PROPOSED 200 WATT HIGH PRESSURE SODIUM, M-C-III LUMINAIRE, BREAKAWAY DEVICE AND FOUNDATION
- LIGHTING UNIT AND FOUNDATION: 47.5 FT. MOUNTING HEIGHT, 15 FT. MAST ARM, BREAKAWAY DEVICE, 400 WATT HIGH PRESSURE SODIUM, M-C-III, LUMINAIRE
- EXISTING LIGHTING UNIT TO REMAIN IN PLACE
- UNDERPASS LUMINAIRE: 55 WATT LOW PRESSURE SODIUM
- 18" x 18" x 10" JUNCTION BOX, NO. 10 AWG CABLES SHALL HAVE QUICK DISCONNECT BREAKAWAY RECEPTACLES: FUSED FOR PHASE CABLES, NON-FUSED FOR NEUTRAL CABLE.
- 12"x 6"x 6" JUNCTION BOX
- 1-1/4" DIA. CABLE DUCT WITH 3-1/C ELECTRIC CABLES (SIZE AS NOTED ON THE PLANS) AND NO 6 AWG. GROUNDING CONDUCTOR, IN TRENCH
- 1-1/4" DIA. CABLE DUCT UNDER BITUMINOUS SHOULDER WITH 3-1/C NO. 2 AWG ELECTRIC CABLES
- 3-1/C NO. 2/0 AWG IN 3" RIGID STEEL CONDUIT IN TRENCH
- 3-1/C ELECTRIC CABLES IN 2-1/2" DIA. PLASTIC CONDUIT ATTACHED TO STRUCTURE
- UNLESS OTHERWISE INDICATED, 3-1/C NO. 10 AWG IN 1" PLASTIC CONDUIT
- 2-1/2" DIA. RIGID STEEL CONDUIT PUSHED UNDER EXISTING ROADWAY
- HA5 — POLE NUMBERING DECAL: H - CONTROL CABINET DESIGNATION; A - CIRCUIT DESIGNATION; 5 - LUMINAIRE SEQUENCE
- R — LUMINAIRE CONNECTED TO RED PHASE WIRE
- B — LUMINAIRE CONNECTED TO BLACK PHASE WIRE
- CONTROL CABINET
- COMMONWEALTH EDISON SERVICE POLE. 240/480V, SINGLE PHASE, 3 WIRE SYSTEM

NO FOUNDATION SYMBOL SHOWN INDICATES FOUNDATION TYPE A.

FDN. B FOUNDATION TYPE B
FDN. C FOUNDATION TYPE C
FDN. D FOUNDATION TYPE D

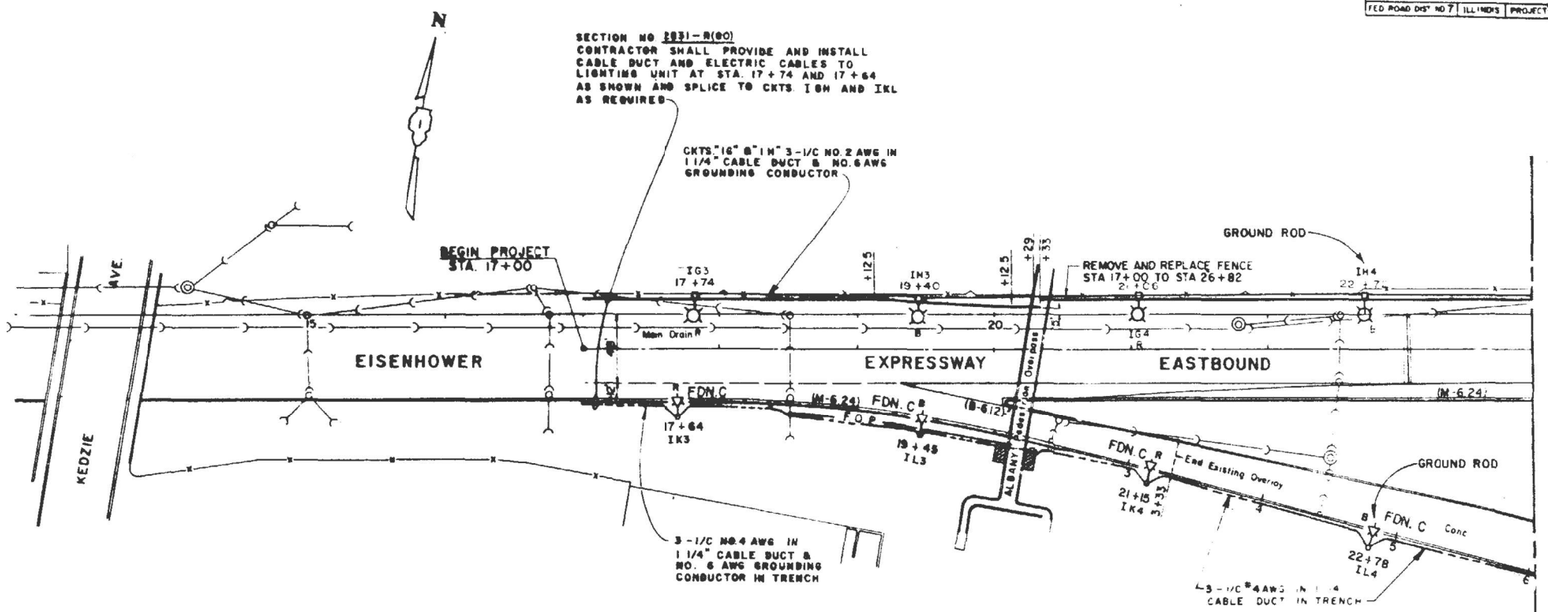

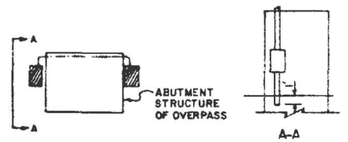

ALBANY PEDESTRIAN OVERPASS DETAIL

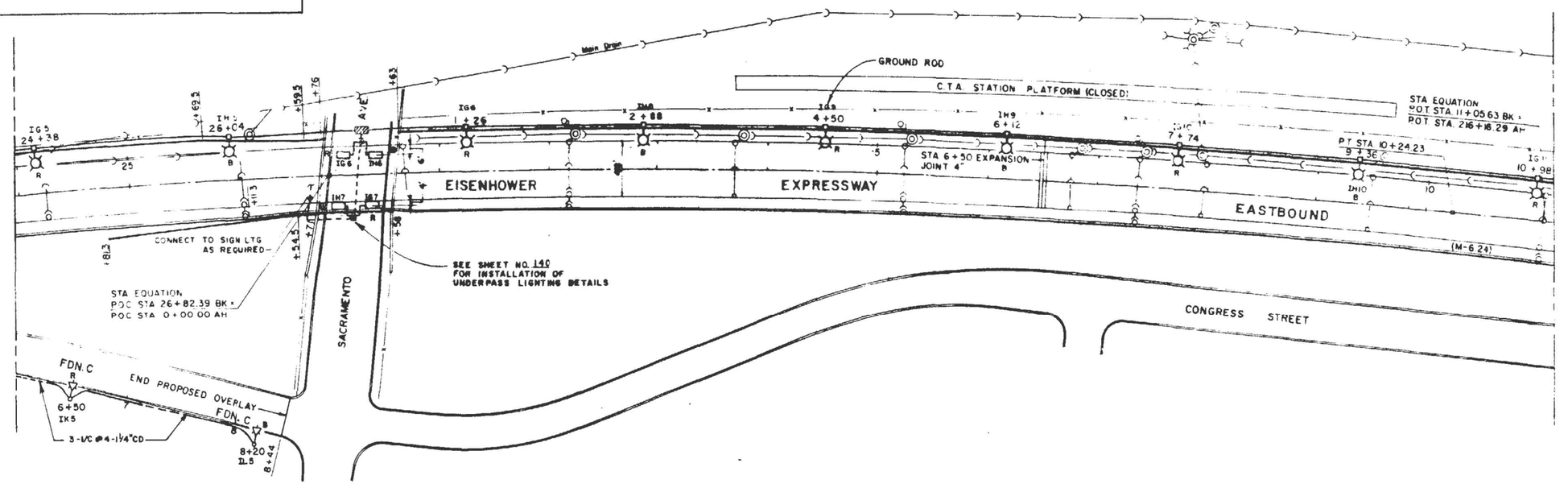

EL-13

FOR INFORMATION ONLY

MODEL: Default
FILE NAME: F:\Projects\1058-Eisenhower IDOT-Collins Design\Smtk-290 Sacramento Blvd\D162K65 EL-13.dgn

AMES Engineering, Inc. CONSULTING ENGINEERS 6330 Belmont Road, Suite 4B Downers Grove, IL 60516	USER NAME = Srahman	DESIGNED - KV/BL	REVISED -	STATE OF ILLINOIS DEPARTMENT OF TRANSPORTATION
		DRAWN - SR	REVISED -	
	PLOT SCALE = 2.000 ' / in.	CHECKED - MH	REVISED -	
	PLOT DATE = 9/8/2025	DATE - 09-09-2025	REVISED -	

I-290 AT SACRAMENTO BLVD.

SCALE: | SHEET OF SHEETS | STA. | TO STA.

F.A.I RTE.	SECTION	COUNTY	TOTAL SHEETS	SHEET NO.
290	2019-192-B-R	COOK	237	133
		CONTRACT NO. 62K65		
	ILLINOIS	FED. AID PROJECT		

ROUTE	SECTION	COUNTY	TOTAL SHEETS	SHEET NO.
FAI-290	2525-R (80)	COOK	206	147
FED. ROAD DIST. NO. 7	ILLINOIS	PROJECT-IX-I-290-4(		

LEGEND

	LIGHTING UNIT AND BARRIER WALL FOUNDATION: 47.5 FT. MOUNTING HEIGHT, 6 FT. MAST ARM, 400 WATT HIGH PRESSURE SODIUM, M-C-III, LUMINAIRE
	4" PVC RACEWAY IN BARRIER WALL WITH 3-1/C, TYPE XHHW ELECTRIC CABLES IN 1-1/4" CABLE DUCT AND NO. 6 AWG GROUNDING CONDUCTOR, IN EACH RUN
	3-1,000 WATT HIGH PRESSURE SODIUM, M-C-III LUMINAIRES, 100 FT. MOUNTING HEIGHT HIGH MAST POLE AND FOUNDATION
	RELOCATED 42 FT. MOUNTING HEIGHT POLE SHAFT AND ARM WITH PROPOSED 200 WATT HIGH PRESSURE SODIUM, M-C-III LUMINAIRE, BREAKAWAY DEVICE AND FOUNDATION
	LIGHTING UNIT AND FOUNDATION: 47.5 FT. MOUNTING HEIGHT, 15 FT. MAST ARM, BREAKAWAY DEVICE, 400 WATT HIGH PRESSURE SODIUM, M-C-III, LUMINAIRE
	UNDERPASS LUMINAIRE: 55 WATT LOW PRESSURE SODIUM
	18" x 18" x 10" JUNCTION BOX, NO. 10 AWG CABLES SHALL HAVE QUICK DISCONNECT BREAKAWAY RECEPTACLES; FUSED FOR PHASE CABLES, NON-FUSED FOR NEUTRAL CABLE.
	12" x 6" x 6" JUNCTION BOX
	1-1/4" DIA. CABLE DUCT WITH 3-1/C ELECTRIC CABLES SIZED AS NOTED ON PLANS AND NO. 6 AWG GROUNDING CONDUCTOR, IN TRENCH
	3-1/C NO.2/0 AWG IN 3" RIGID STEEL CONDUIT IN TRENCH
	3-1/C ELECTRIC CABLES IN 2-1/2" DIA. PLASTIC CONDUIT ATTACHED TO STRUCTURE
	UNLESS OTHERWISE INDICATED, 3-1/C NO. 10 AWG IN 1" PLASTIC CONDUIT
	2-1/2" DIA. RIGID STEEL CONDUIT PUSHED UNDER EXISTING ROADWAY
HA5	POLE NUMBERING DECAL: H - CONTROL CABINET DESIGNATION A - CIRCUIT DESIGNATION 5 - LUMINAIRE SEQUENCE
R	LUMINAIRE CONNECTED TO RED PHASE WIRE
B	LUMINAIRE CONNECTED TO BLACK PHASE WIRE
	CONTROL CABINET
Ø	COMMONWEALTH EDISON SERVICE POLE. 240/480V, SINGLE PHASE, 3 WIRE SYSTEM
	NO FOUNDATION SYMBOL SHOWN INDICATES FOUNDATION TYPE A.
FDN. B	FOUNDATION TYPE B
FDN. C	FOUNDATION TYPE C
FDN. D	FOUNDATION TYPE D

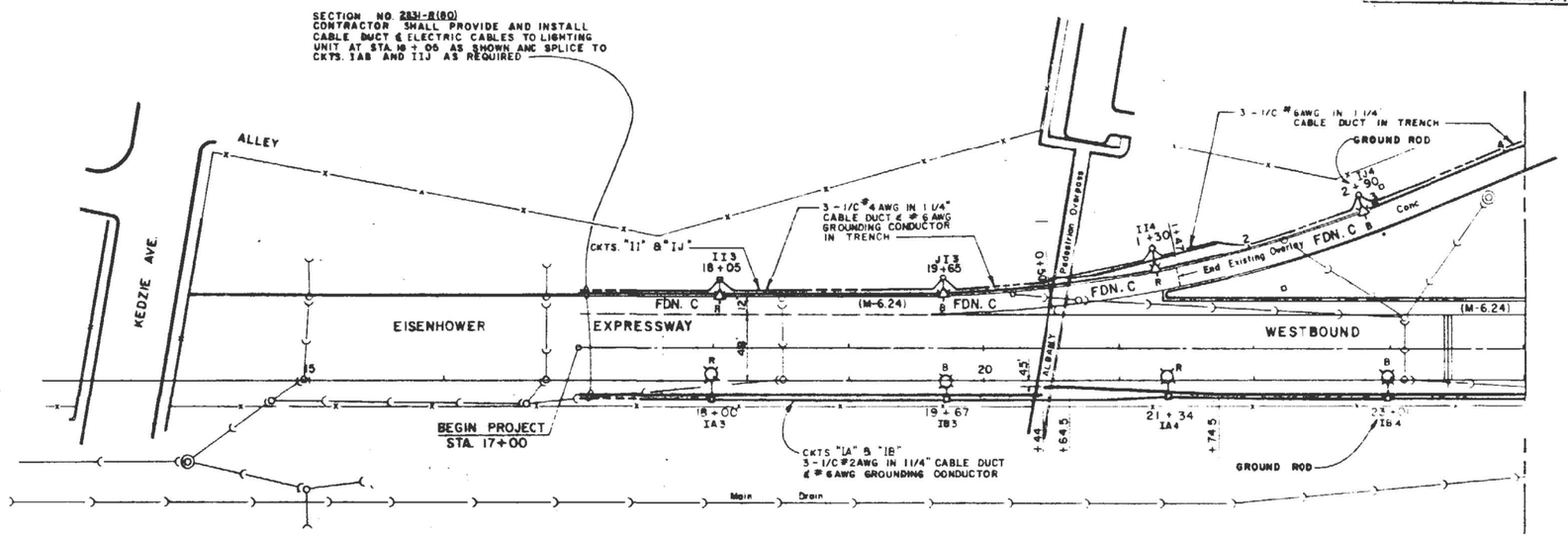

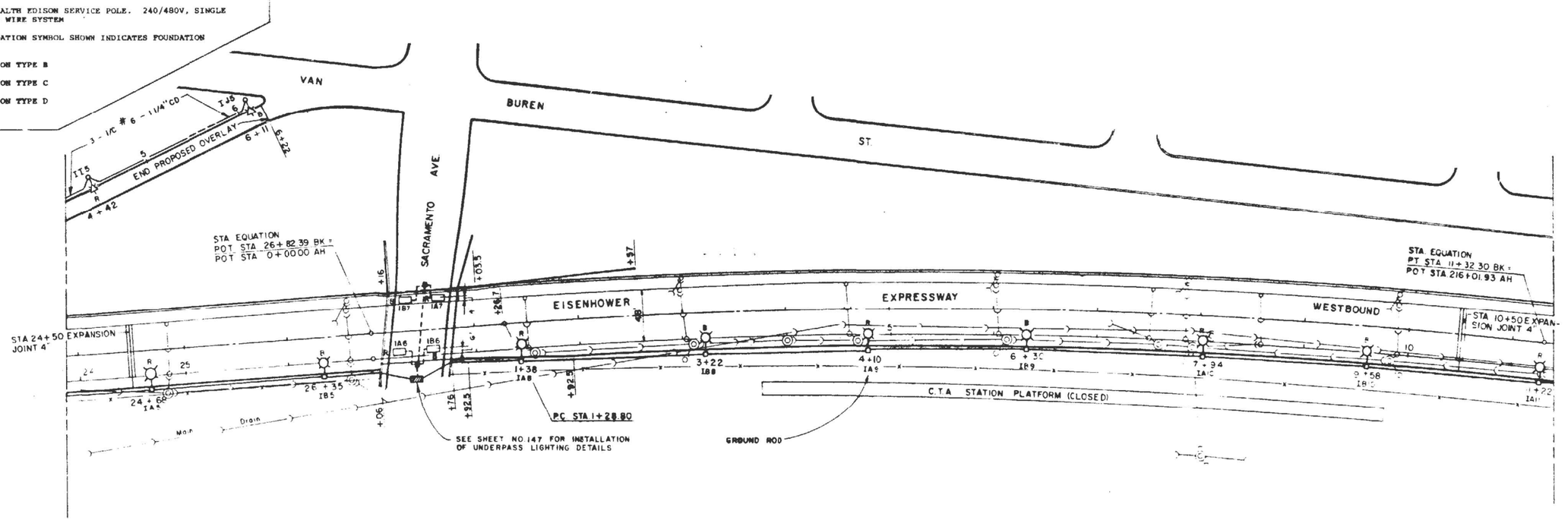

FOR INFORMATION ONLY

EL-14

MODEL: Default
FILE NAME: F:\Projects\1058-Eisenhower EDOT-Collins\Design\Shift-299 Sacramento Blvd\D1162K65 EL-14.dgn

AMES Engineering, Inc. CONSULTING ENGINEERS 6330 Belmont Road, Suite 4B Downers Grove, IL 60516	USER NAME = Srahman	DESIGNED - KV/BL	REVISED -	STATE OF ILLINOIS DEPARTMENT OF TRANSPORTATION
		DRAWN - SR	REVISED -	
	PLOT SCALE = 2.000 ' / in.	CHECKED - MH	REVISED -	
	PLOT DATE = 9/8/2025	DATE - 09-09-2025	REVISED -	

I-290 AT SACRAMENTO BLVD.

SCALE: | SHEET OF SHEETS | STA. | TO STA.

F.A.I RTE.	SECTION	COUNTY	TOTAL SHEETS	SHEET NO.
290	2019-192-B-R	COOK	237	134
		CONTRACT NO. 62K65		
	ILLINOIS	FED. AID PROJECT		

ROUTE NO	SECTION	COUNTY	TOTAL SHEETS	SHEET NO
FAI-290	1977 241-R	COOK	197	148
FED ROAD DIST NO 7	ILLINOIS	PROJECT		

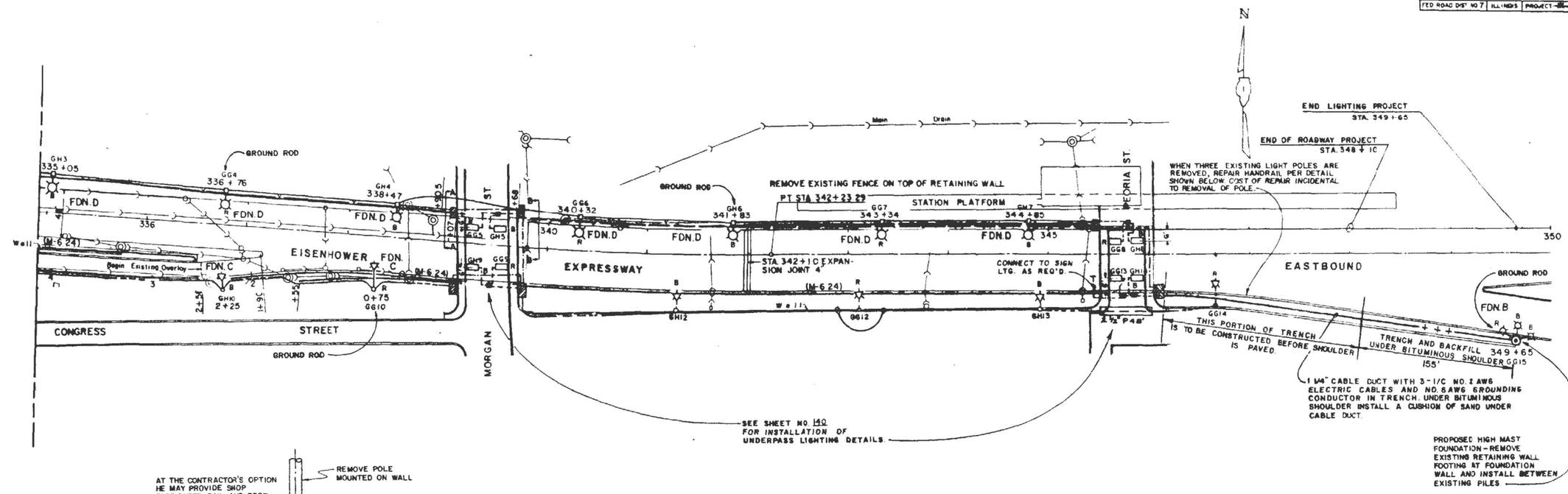

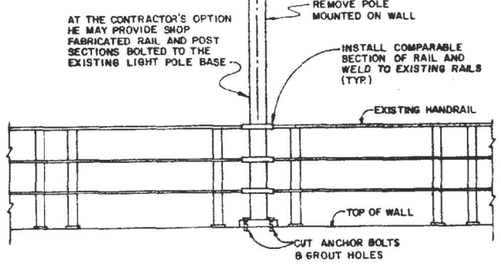

TYPICAL HANDRAIL REPAIR DETAIL
(N.T.S)

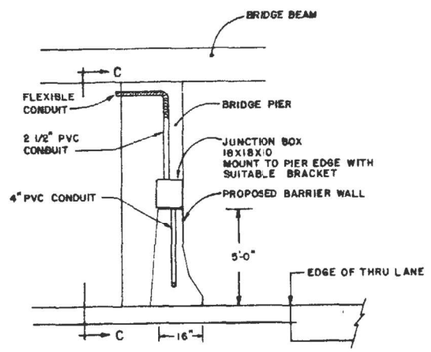

SECTION A-A

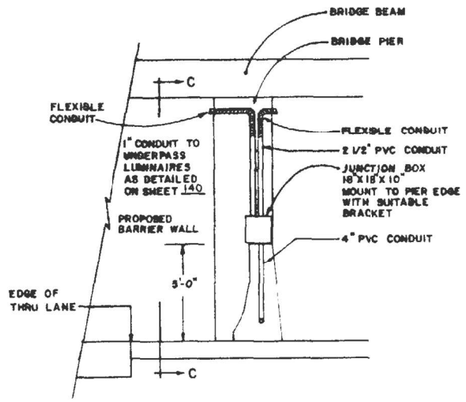

SECTION B-B

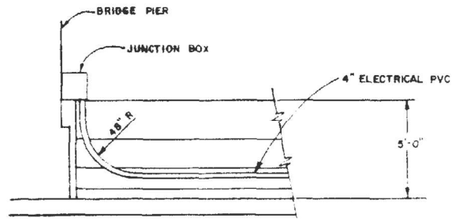

SECTION C-C

FOR INFORMATION ONLY

EL-15

MODEL: Default
FILE NAME: F:\Projects\1058-Eisenhower IDOT-Collins\Design\Shift-290 Sacramento Blvd\D162K65 EL-15.dgn

AMES Engineering, Inc. CONSULTING ENGINEERS 6330 Belmont Road, Suite 4B Downers Grove, IL 60516	USER NAME = Srahman	DESIGNED - KV/BL	REVISED -	STATE OF ILLINOIS DEPARTMENT OF TRANSPORTATION
		DRAWN - SR	REVISED -	
	PLOT SCALE = 2.000 ' / in.	CHECKED - MH	REVISED -	
	PLOT DATE = 9/8/2025	DATE - 09-09-2025	REVISED -	

I-290 AT SACRAMENTO BLVD.

SCALE: | SHEET OF SHEETS | STA. | TO STA.

F.A.I RTE.	SECTION	COUNTY	TOTAL SHEETS	SHEET NO.
290	2019-192-B-R	COOK	237	135
		CONTRACT NO. 62K65		
		ILLINOIS	FED. AID PROJECT	

ROUTE NO.	SECTION	COUNTY	TOTAL SHEETS	SHEET
FAI-290	2019-192-B	COOK	197	144

FED ROAD DIST NO 7 | ILLINOIS | PROJECT-[illegible]-290-4( )

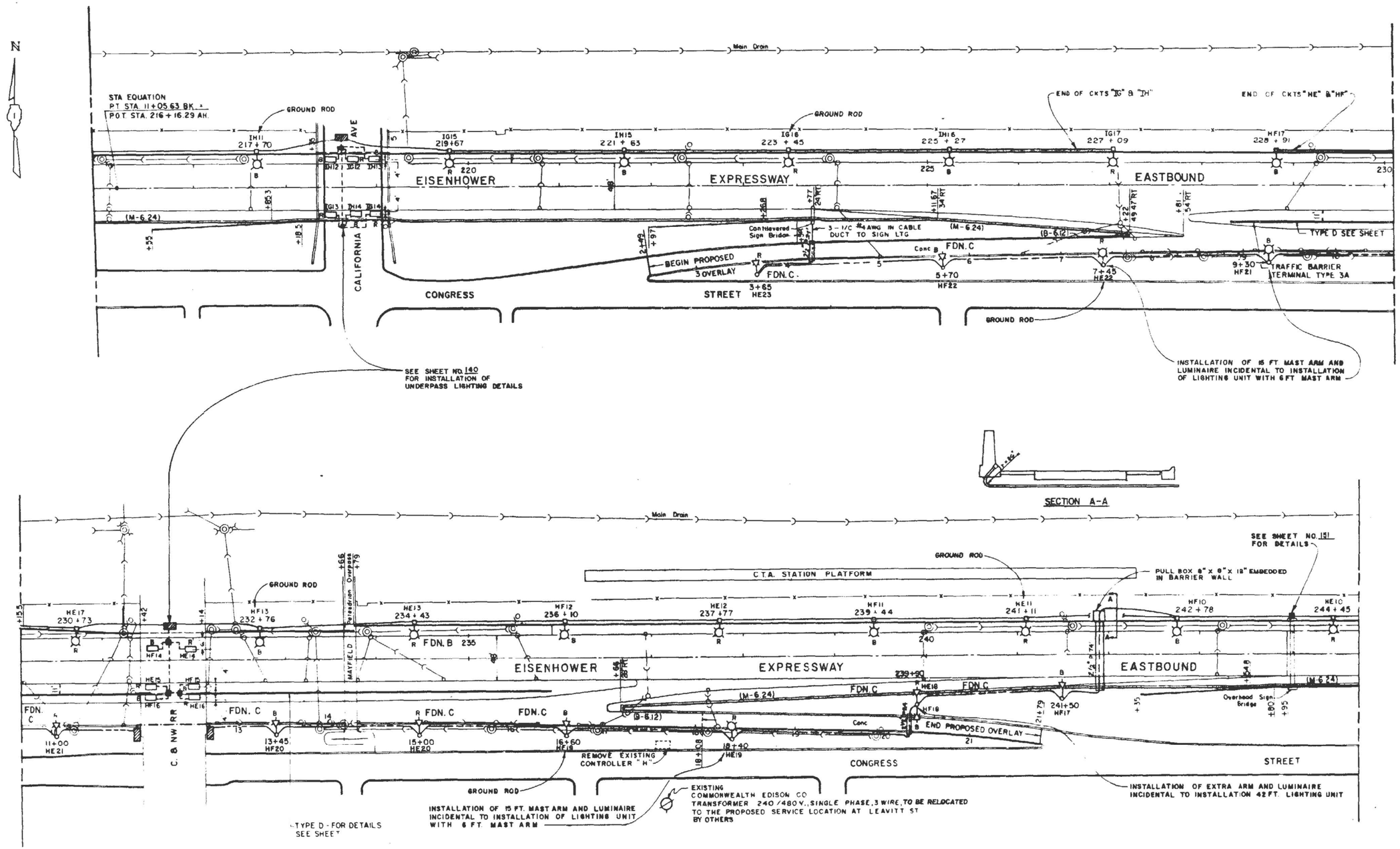

FOR INFORMATION ONLY

EL-16

MODEL: Default
FILE NAME: F:\Projects\1058-Eisenhower IDOT-Collins\Design\Shtl-290 Sacramento Blvd\D162K65 EL-16.dgn

AMES Engineering, Inc. CONSULTING ENGINEERS 6330 Belmont Road, Suite 4B Downers Grove, IL 60516	USER NAME = Srahman	DESIGNED - KV/BL	REVISED -	STATE OF ILLINOIS DEPARTMENT OF TRANSPORTATION	I-290 AT SACRAMENTO BLVD.
		DRAWN - SR	REVISED -		
	PLOT SCALE = 2,000 ' / in.	CHECKED - MH	REVISED -		
	PLOT DATE = 9/8/2025	DATE - 09-09-2025	REVISED -		SCALE: SHEET OF SHEETS STA. TO STA.

F.A.I RTE.	SECTION	COUNTY	TOTAL SHEETS	SHEET NO.
290	2019-192-B-R	COOK	237	136
		CONTRACT NO. 62K65		
		ILLINOIS	FED. AID PROJECT	

ROUTE NO	SEC	COUNTY	TOTAL SHEETS	SHEET NO
F.A.I.	*	COOK	246	157
STA		TO STA		
FED. ROAD DIST. NO. 7	ILLINOIS	PROJECT IR-I-290(4)		

* 2831-R(80)

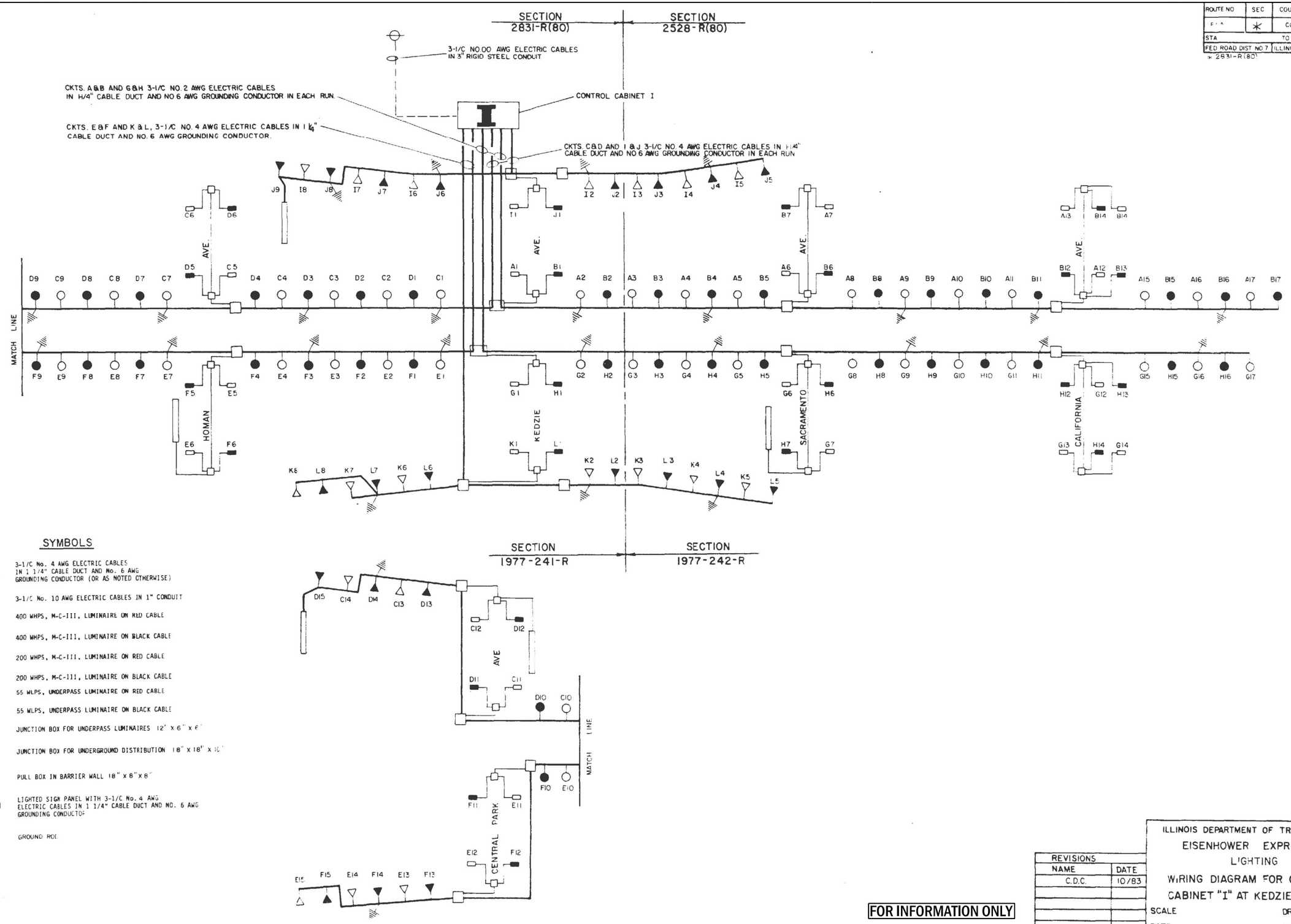

SYMBOLS

- 3-1/C No. 4 AWG ELECTRIC CABLES IN 1 1/4" CABLE DUCT AND No. 6 AWG GROUNDING CONDUCTOR (OR AS NOTED OTHERWISE)
- 3-1/C No. 10 AWG ELECTRIC CABLES IN 1" CONDUIT
- 400 WHPS, M-C-III, LUMINAIRE ON RED CABLE
- 400 WHPS, M-C-III, LUMINAIRE ON BLACK CABLE
- 200 WHPS, M-C-III, LUMINAIRE ON RED CABLE
- 200 WHPS, M-C-III, LUMINAIRE ON BLACK CABLE
- 55 WLPS, UNDERPASS LUMINAIRE ON RED CABLE
- 55 WLPS, UNDERPASS LUMINAIRE ON BLACK CABLE
- JUNCTION BOX FOR UNDERPASS LUMINAIRES 12" X 6" X 6"
- JUNCTION BOX FOR UNDERGROUND DISTRIBUTION 18" X 18" X 12"
- PULL BOX IN BARRIER WALL 18" X 8" X 8"
- LIGHTED SIGN PANEL WITH 3-1/C No. 4 AWG ELECTRIC CABLES IN 1 1/4" CABLE DUCT AND NO. 6 AWG GROUNDING CONDUCTOR
- GROUND ROD

EL-17

REVISIONS	
NAME	DATE
C.D.C.	10/83

FOR INFORMATION ONLY

ILLINOIS DEPARTMENT OF TRANSPORTATION
EISENHOWER EXPRESSWAY
LIGHTING
WIRING DIAGRAM FOR CONTROL CABINET "I" AT KEDZIE AVENUE

SCALE
DRAWN BY L.F.S.
DATE
CHECKED BY F.L.F.

F.A.I. RTE.	SECTION	COUNTY	TOTAL SHEETS	SHEET NO.
290	2019-192-B-R	COOK	237	137
		CONTRACT NO. 62K65		
		ILLINOIS FED. AID PROJECT		

AMES Engineering, Inc.
CONSULTING ENGINEERS
6330 Belmont Road, Suite 4B
Downers Grove, IL 60516

USER NAME = Srahman		DESIGNED - KV/BL	REVISED -	
		DRAWN - SR	REVISED -	
PLOT SCALE = 2.000 ' / in.		CHECKED - MH	REVISED -	
PLOT DATE = 9/8/2025		DATE - 09-09-2025	REVISED -	

STATE OF ILLINOIS
DEPARTMENT OF TRANSPORTATION

I-290 AT SACRAMENTO BLVD.

SCALE: | SHEET OF SHEETS | STA. | TO STA.

MODEL: Default
FILE NAME: F:\Projects\1058-Eisenhower IDOT-Collins Design\Sht\290 Sacramento Blvd D162K65 EL-17.dgn



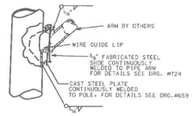

SECTION AT POLE PLATE

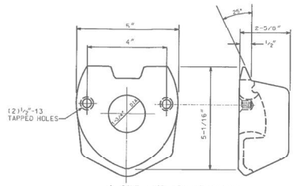

2 BOLT MAST ARM ATTACHMENT

FOR DETAILS SEE DRG.# 659 MATERIAL: CAST STEEL

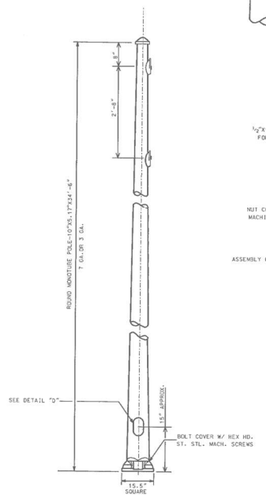

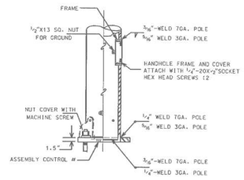

DETAIL "D"

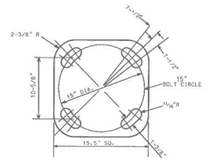

DETAIL "A"

BOLT SLOTS

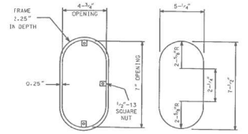

FRAME DOOR

HANDHOLE DETAIL

5.17"x10.0" STEEL/34'-6" POLE 7 OR 3 GAUGE		
CITY OF CHICAGO DEPT. OF STREETS AND SANITATION BUREAU OF ELECTRICITY DIVISION OF ELECTRICAL ENGINEERING		
DRAFTSMAN: ROBERT IVY	CHIEF DRAFTSMAN: ROBERT CARTER	DESIGNATION: RON POOL
SUPERVISING ENGINEER:	ELEC. DESIGN ENGR.	DWG. NO.
ENGINEER OF ELECTRICITY:		808
ASST. SUPT. OF ELECTRICITY:		
DEPUTY COMMISSIONER:		10-03-01

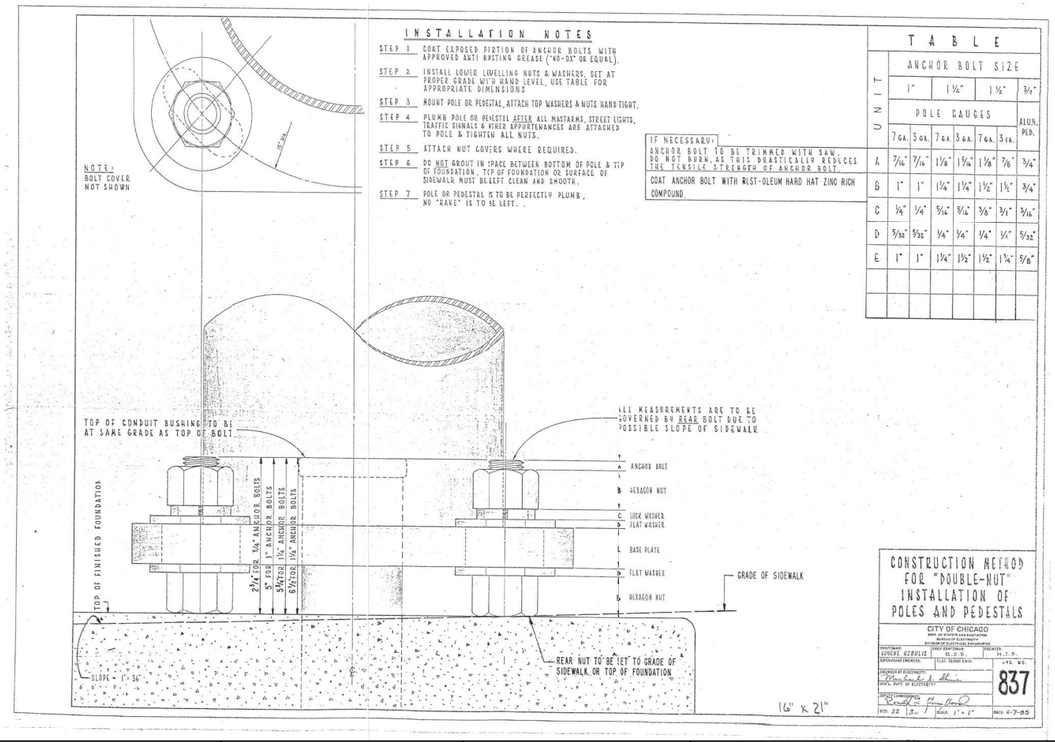

TABLE

UNIT	ANCHOR BOLT SIZE						ALUM. PED.
	1"		1¼"		1½"		¾"
	POLE GAUGES						
	7 GA.	3 GA.	7 GA.	3 GA.	7 GA.	3 GA.	
A	7/16"	7/16"	1 1/16"	1 5/16"	1 1/16"	7/8"	¾"
B	1"	1"	1¼"	1¼"	1½"	1½"	¾"
C	¼"	¼"	5/16"	5/16"	3/8"	3/8"	5/16"
D	5/32"	5/32"	¼"	¼"	¼"	⅜"	5/32"
E	1"	1"	1¼"	1½"	1½"	1¾"	5/8"

CONSTRUCTION METHOD FOR "DOUBLE-NUT" INSTALLATION OF POLES AND PEDESTALS		
CITY OF CHICAGO DEPT. OF STREETS AND SANITATION BUREAU OF ELECTRICITY DIVISION OF ELECTRICAL ENGINEERING		
DRAFTSMAN: EUGENE GERULIS	CHIEF DRAFTSMAN: R.T.S.	DESIGNATION: M.T.S.
SUPERVISING ENGINEER:	ELEC. DESIGN ENGR.	DWG. NO.
ENGINEER OF ELECTRICITY:		837
ASST. SUPT. OF ELECTRICITY:		
DEPUTY COMMISSIONER:	SCALE: 1" = 1'	DATE: 4-7-85

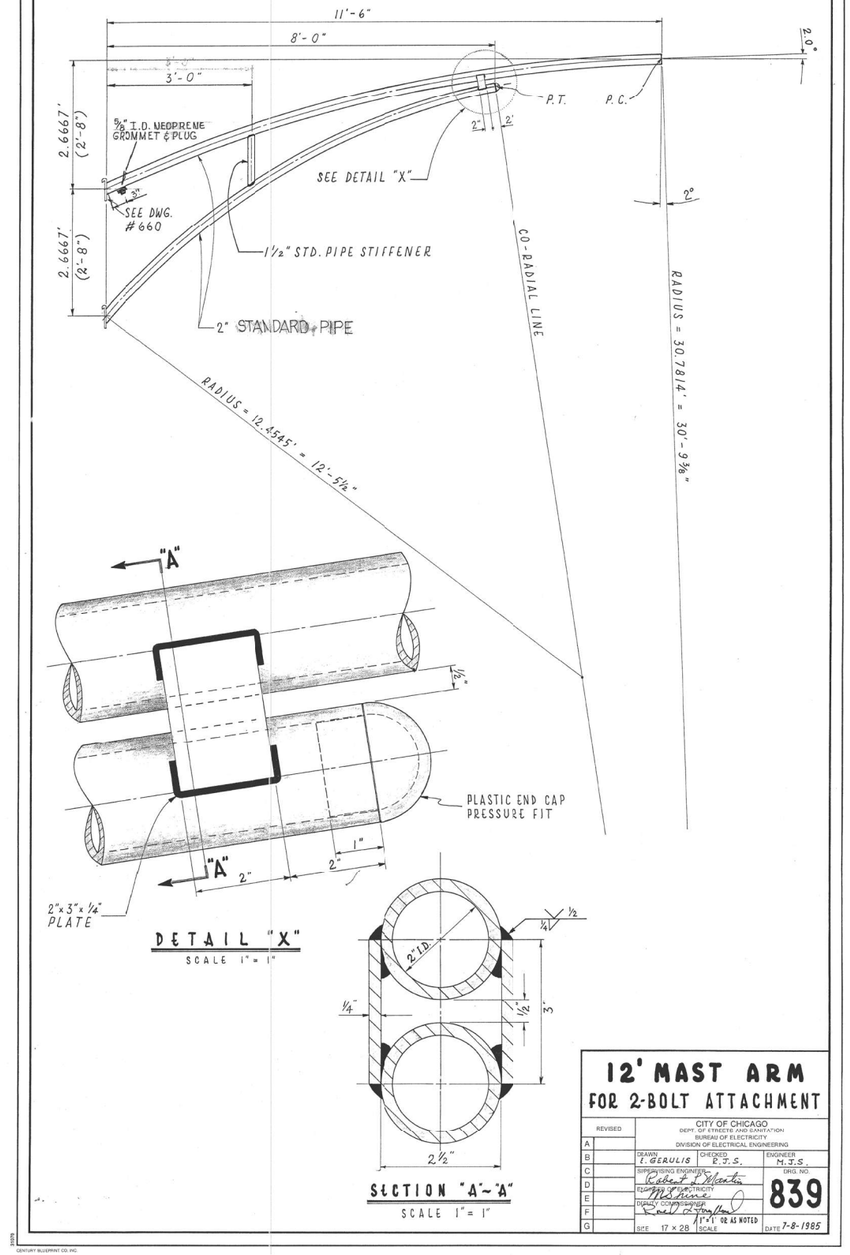

12' MAST ARM FOR 2-BOLT ATTACHMENT				
REVISED	CITY OF CHICAGO DEPT. OF STREETS AND SANITATION BUREAU OF ELECTRICITY DIVISION OF ELECTRICAL ENGINEERING			
A				
B	DRAWN: E. GERULIS	CHECKED: R.T.S.	ENGINEER: M.T.S.	
C	SUPERVISING ENGINEER: Robert J. Martin			
D	ELECTRICITY: Mel Rice		DRG. NO. 839	
E	DEPUTY COMMISSIONER: Ronald L. Gaughan			
F	SCALE: 17 × 28	1"=1" OR AS NOTED	DATE: 7-8-1985	
G				

FOR INFORMATION ONLY

EL-18

CENTURY BLUEPRINT CO. INC.

MODEL: Default
FILE NAME: F:\Projects\1050-Eisenhower EDOT-Collins\Design\Smith-290 Sacramento Blvd\D162K65 EL-18.dgn

AMES Engineering, Inc.
CONSULTING ENGINEERS
6330 Belmont Road, Suite 4B
Downers Grove, IL 60516

USER NAME = Srahman	DESIGNED - KV/BL	REVISED -	STATE OF ILLINOIS DEPARTMENT OF TRANSPORTATION	I-290 AT SACRAMENTO BLVD.	
	DRAWN - SR	REVISED -			
PLOT SCALE = 2.000 ' / in.	CHECKED - MH	REVISED -			
PLOT DATE = 9/8/2025	DATE - 09-09-2025	REVISED -		SCALE: SHEET OF SHEETS STA. TO STA.	

F.A.I RTE.	SECTION	COUNTY	TOTAL SHEETS	SHEET NO.
290	2019-192-B-R	COOK	237	138
		CONTRACT NO. 62K65		
		ILLINOIS	FED. AID PROJECT	

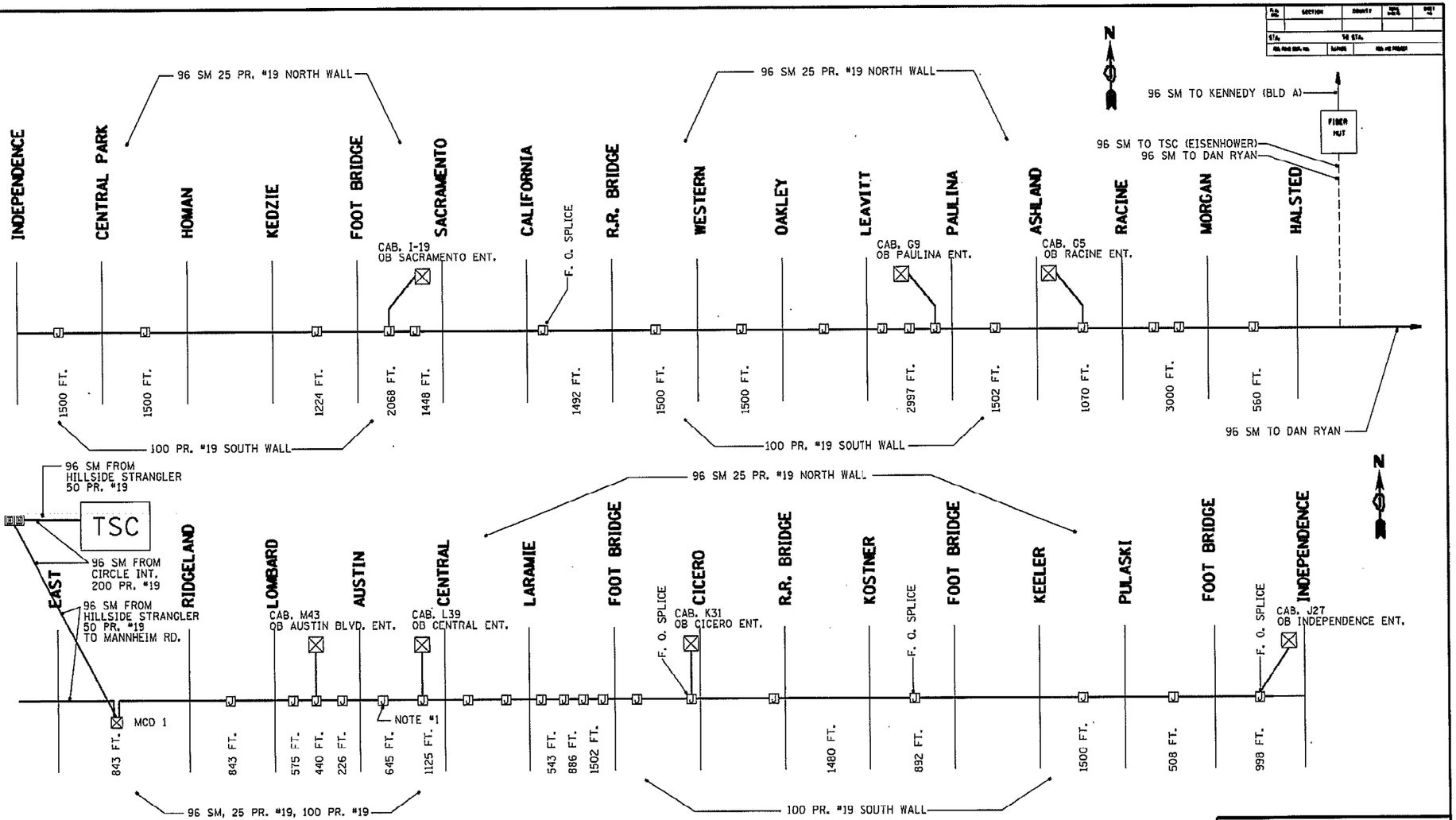

NOTES:

1.- NORTH AND SOUTH BARRIER WALL DUCTS CONVERGE AT WB AUSTIN EXIT.
ONE DUCT IN NORTH WALL AUSTIN EXIT TO TSC.

2.- SPARE 1" FIBER INNER DUCT HILLSIDE STRANGLER TO CIRCLE INT.

REVISIONS	
DESCRIPTION	DATE
R.L.	03-03

ILLINOIS DEPARTMENT OF TRANSPORTATION
TRAFFIC SYSTEMS CENTER

EISENHOWER NORTH BARRIER WALL
FIBER/COPPER AS-BUILT
TSC TO CIRCLE INTERCHANGE

SCALE: VERT. NONE HORIZ.
DATE 07-02
DRAWN BY O.M.
CHECKED BY R.L.

TRAFFIC SYSTEMS CENTER

MODEL: Default
FILE NAME: P:\10dt\11411-IDOT - Sacramento and Paulina over I-290\Work\CADD\Sacramento - Contract 62K65\CADD_Sheets\D162K65-sht-its.dgn

COLLINS ENGINEERS INC.

USER NAME = omartinez	DESIGNED - OAM	REVISED -	
	DRAWN - OAM	REVISED -	
PLOT SCALE = 100.000 ' / in.	CHECKED - RAG	REVISED -	
PLOT DATE = 8/14/2025	DATE - 09/12/2025	REVISED -	

STATE OF ILLINOIS
DEPARTMENT OF TRANSPORTATION

FAI-290 (EISENHOWER EXPRESSWAY) AT SACRAMENTO BOULEVARD
EXISTING ITS PLANS (FOR INFORMATION ONLY)

SCALE: NTS | SHEET 1 OF 3 SHEETS | STA. | TO STA.

F.A.I. RTE.	SECTION	COUNTY	TOTAL SHEETS	SHEET NO.
290	2019-192-B-R	COOK	237	139
		CONTRACT NO. 62K65		
		ILLINOIS	FED. AID PROJECT	

F.A.I. RTE.	SECTION	COUNTY	TOTAL SHEETS	SHEET NO.
I-290	1977-242-R	COOK	197	161
STA.	TO STA.			
FED. ROAD DIST. NO. 7	ILLINOIS	FED. AID PROJECT		

I-290

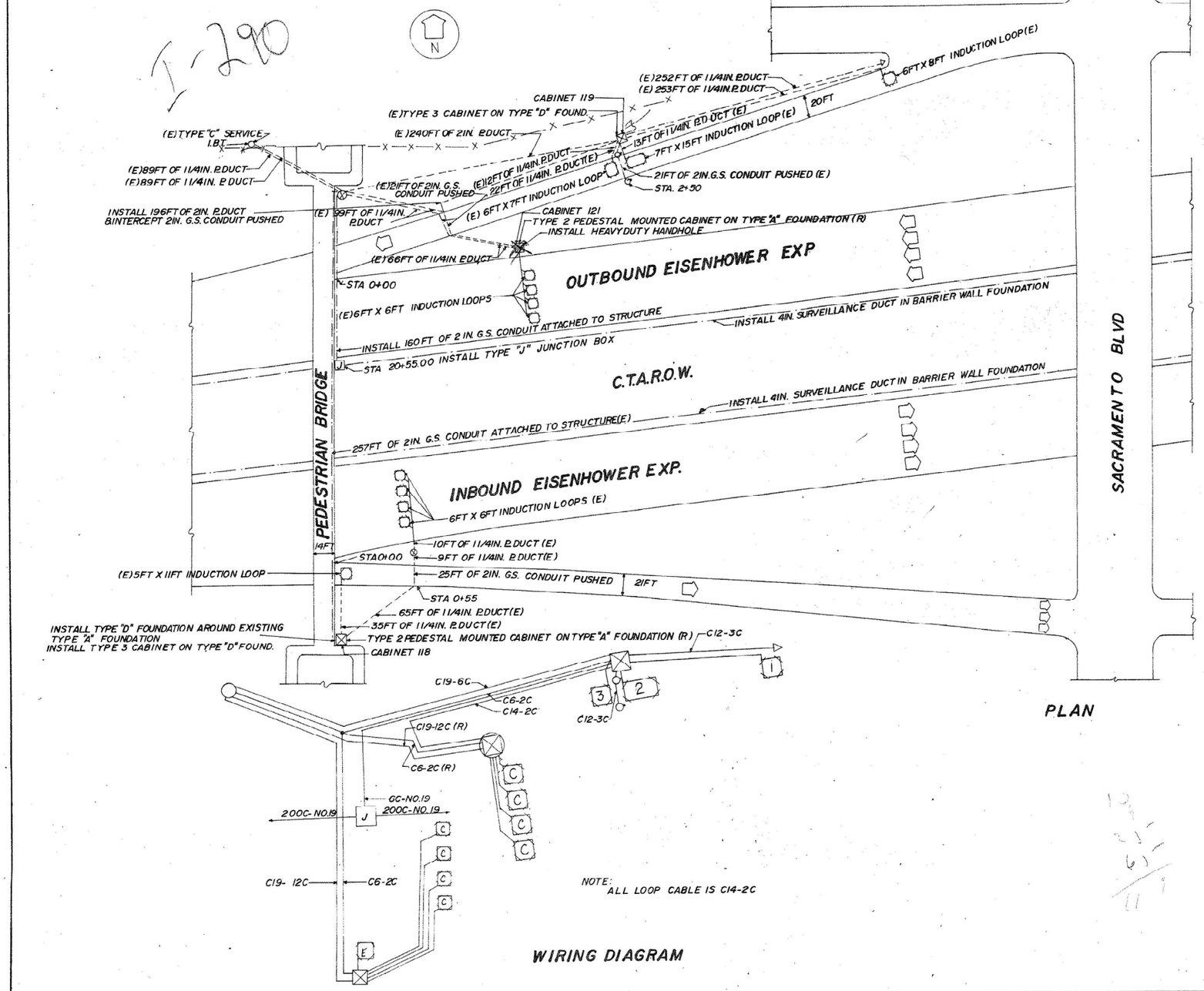

ESTIMATE OF QUANTITIES

1	EACH	IND LOOP DET SEN UNIT
1	EACH	DIG LOOP DET SEN UNIT
170	LIN.FT.	INDUCTION LOOP
25	LIN.FT.	GALVS CON P2
10	LIN.FT.	GALVS CON AT ST2
44	LIN.FT.	POLY DUCT 1 1/4
128	LIN.FT.	ELCBL C19 6C
2500	LIN.FT.	ELCBL C19 200C
144	LIN.FT.	ELCBL C14 2C SHIELD
1	EACH	CONC FOUND TY D
35	LIN.FT.	TRENCH & BACKFILL
1	EACH	CAB HSNG E 0 ESP 3
1	EACH	REMOVAL EX CONTROL CAB
128	LIN.FT.	ELC BL C6 2C
1	EACH	REMOVE EXISTING CONC FOUND

LEGEND
- INDUCTION LOOP
- DUCT
- CONDUIT
- HEAVY DUTY HANDHOLE
- CABINET
- SERVICE INSTALLATION
- RAMP METERING SIGNAL
- FENCE
- (E) EXISTING
- (R) REMOVE EXISTING
- FLASHER

INBOUND S/

ILLINOIS DEPARTMENT OF TRANSPORTATION
TRAFFIC SYSTEMS CENTER

SACRAMENTO BLVD

REVISIONS	
NAME	DATE

SCALE: VERT. HORIZ
DRAWN BY KAM
DATE
CHECKED BY
REV. 10-02

MODEL: Default
FILE NAME: P:\10411\10411-IDOT - Sacramento and Paulina over I-290\Work\CADD\Sacramento - Contract 62K65\CADD_Sheets\D162K65-alt-its-dji.n

COLLINS ENGINEERS INC.

USER NAME = omartinez	DESIGNED - OAM	REVISED -	
	DRAWN - OAM	REVISED -	
PLOT SCALE = 100.000 ' / in.	CHECKED - RAG	REVISED -	
PLOT DATE = 8/14/2025	DATE - 09/12/2025	REVISED -	

STATE OF ILLINOIS
DEPARTMENT OF TRANSPORTATION

FAI-290 (EISENHOWER EXPRESSWAY) AT SACRAMENTO BOULEVARD
EXISTING ITS PLANS (FOR INFORMATION ONLY)

SCALE: NTS | SHEET 2 OF 3 SHEETS | STA. | TO STA.

F.A.I. RTE.	SECTION	COUNTY	TOTAL SHEETS	SHEET NO.
290	2019-192-B-R	COOK	237	140
		CONTRACT NO. 62K65		
	ILLINOIS	FED. AID PROJECT		

ROUTE NO.	SEC.	COUNTY	TOTAL SHEETS	SHEET NO.
I-290	1977-242-R	COOK	137	162

WIRING DIAGRAM

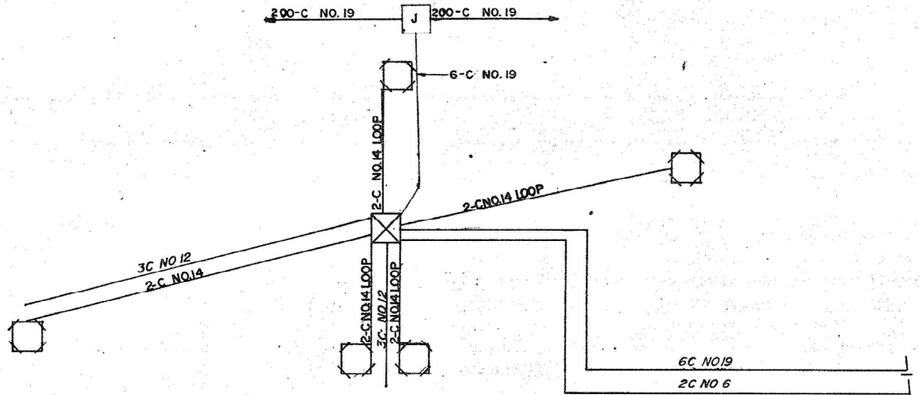

ESTIMATE OF QUANTITIES

166	LIN. FT.	INDUCTION LOOP
107	LIN. FT.	GALVS CON PIPE
10	LIN. FT.	GALVS CON AT ST 2
461	LIN. FT.	POLY DUCT 1 1/4
685	LIN. FT.	POLY DUCT 2
226	LIN. FT.	EL CBL C12 3C
883	LIN. FT.	EL CBL C19 6C
579	LIN. FT.	EL CBL C14 2C SHIELD
796	LIN. FT.	EL CBL C6 2C
931	LIN. FT.	TRENCH & BACKFILL
1	EACH	IND. LOOP DET. SEN. UNIT
1	EACH	DIG LOOP DET. SEN. UNIT 4 CHA.
1400	LIN FT	EL CBL C19 200C
2	EACH	CROSS CONNECT TERMINAL
176	LIN FT	THPL PVT MK LINE 8
590	LIN FT	THPL PVT MK LINE 12
11	LIN. FT.	THPL PVT MK LINE 18

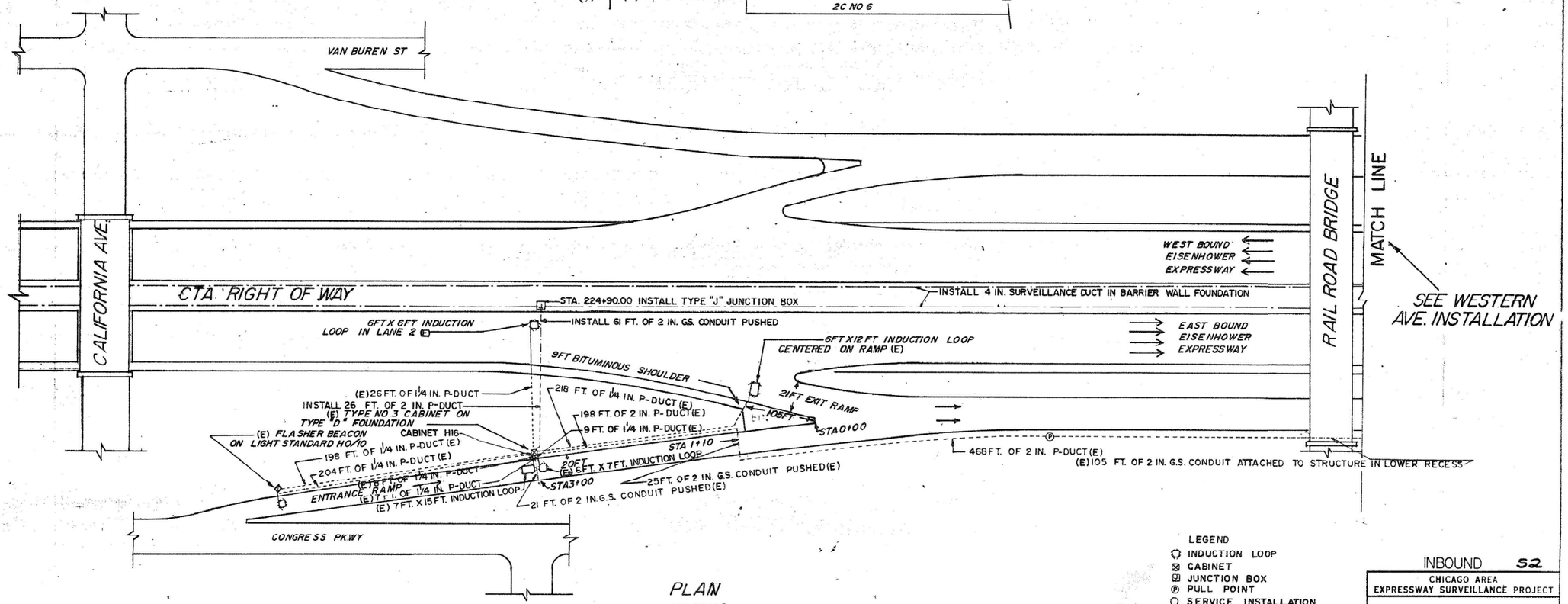

PLAN
NO SCALE

LEGEND
- INDUCTION LOOP
- CABINET
- JUNCTION BOX
- PULL POINT
- SERVICE INSTALLATION
- HANDHOLE
- DUCT
- CONDUIT
- FENCE
- FLASHER
- (E) EXISTING FACILITIES

INBOUND 52

CHICAGO AREA EXPRESSWAY SURVEILLANCE PROJECT

CALIFORNIA AVE. INSTALLATION

DRAWN BY	CHECKED BY	APPR BY	SHEET NO
..	..		

REV. 10-83

MODEL: Default
FILE NAME: P:\104\1411-IDOT - Sacramento and Paulina over I-290\Work\CADD\Sacramento - Contract 62K65\CADD Sheets\D162K65-sht-its.dgn

COLLINS ENGINEERS INC.

USER NAME = omartinez	DESIGNED - OAM	REVISED -	
	DRAWN - OAM	REVISED -	
PLOT SCALE = 100.000 ' / in.	CHECKED - RAG	REVISED -	
PLOT DATE = 8/14/2025	DATE - 09/12/2025	REVISED -	

STATE OF ILLINOIS
DEPARTMENT OF TRANSPORTATION

FAI-290 (EISENHOWER EXPRESSWAY) AT SACRAMENTO BOULEVARD
EXISTING ITS PLANS (FOR INFORMATION ONLY)

SCALE: NTS | SHEET 3 OF 3 SHEETS | STA. | TO STA.

F.A.I. RTE.	SECTION	COUNTY	TOTAL SHEETS	SHEET NO.
290	2019-192-B-R	COOK	237	141
		CONTRACT NO. 62K65		
	ILLINOIS	FED. AID PROJECT		

Benchmark: Box cut on N.E. corner of IDOT traffic signal controller foundation at N.W. corner of W. Van Buren St. and S. Sacramento Blvd. Elev. 596.92.

Existing Structure: S.N. 016-0754 was originally built in 1952 as F.A. Route 131, Sections 3-B-13 and 3-F-13. The structure consists of a three span non-composite continuous wide flange steel beam superstructure with concrete vaulted abutments and two reinforced concrete piers all supported on timber piles. The concrete deck, in all spans, ranges from 7" to 7 1/8" thick and includes a 2" concrete overlay. The structure skew is 9°23'40" and an overall length of 213'-8 1/2" from back to back of abutments. The out-to-out width of the structure is 69'-6". Protective shielding was placed under the deck of Span 1 and 3 to protect traffic on I-290.

Traffic Control: Sacramento Blvd. to be closed during construction and traffic detoured. Traffic on I-290 to be maintained using Maintenance of Traffic.

Salvage: Aluminum handrails, bridge fence railing (District 1), light poles, mast arms, and luminaires (CDOT).

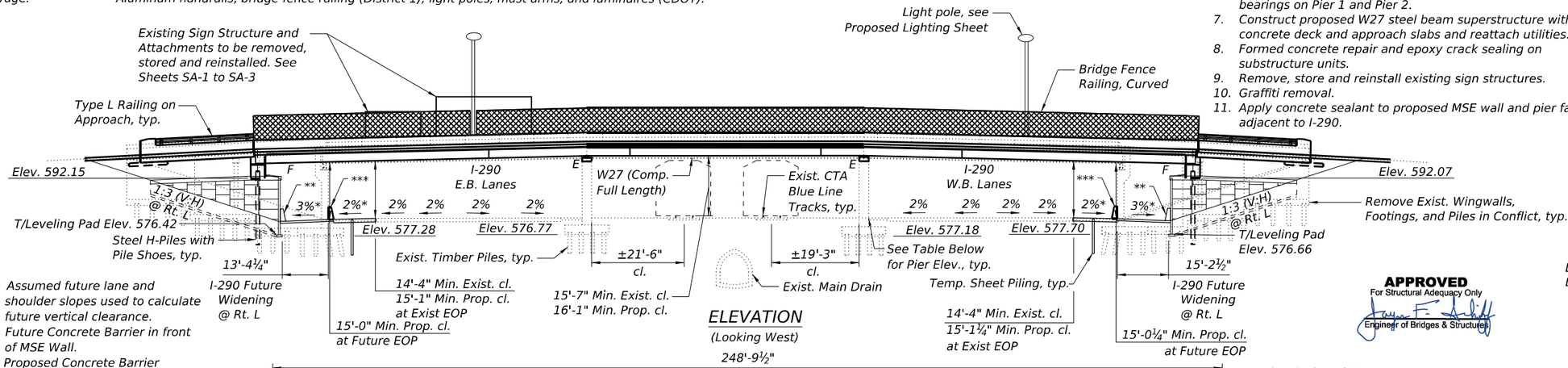

* Assumed future lane and shoulder slopes used to calculate future vertical clearance.
** Future Concrete Barrier in front of MSE Wall.
*** Proposed Concrete Barrier

ELEVATION
(Looking West)

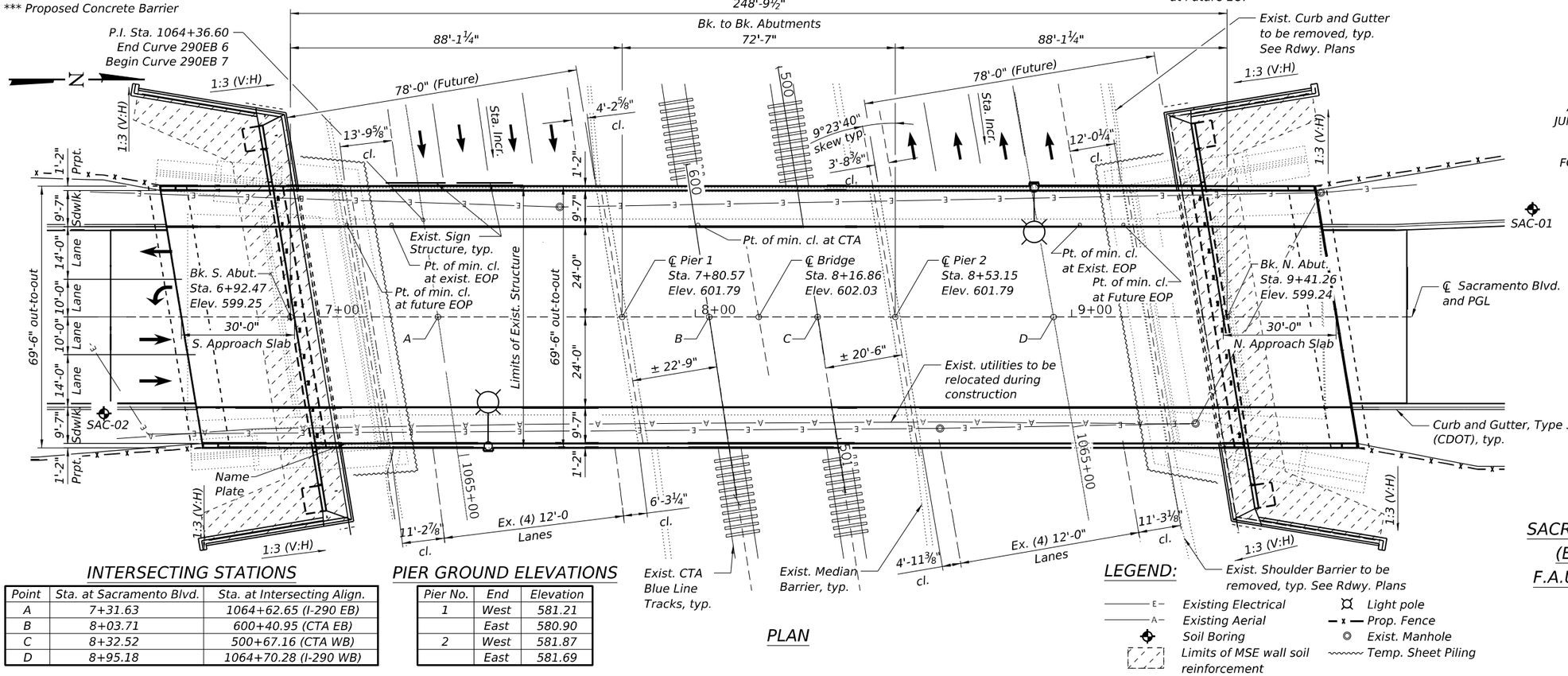

PLAN

INTERSECTING STATIONS

Point	Sta. at Sacramento Blvd.	Sta. at Intersecting Align.
A	7+31.63	1064+62.65 (I-290 EB)
B	8+03.71	600+40.95 (CTA EB)
C	8+32.52	500+67.16 (CTA WB)
D	8+95.18	1064+70.28 (I-290 WB)

PIER GROUND ELEVATIONS

Pier No.	End	Elevation
1	West	581.21
	East	580.90
2	West	581.87
	East	581.69

LEGEND:

E– Existing Electrical
A– Existing Aerial
Soil Boring
Limits of MSE wall soil reinforcement
Light pole
Prop. Fence
Exist. Manhole
Temp. Sheet Piling

SCOPE OF WORK

1. Existing utilities between girders will be supported or relocated by the Utility Owner to provide uninterrupted service during construction.
2. Remove existing concrete deck, W36 steel beam superstructure, expansion joints, bearings, and existing permanent protective shield.
3. Remove existing vaulted approach spans and approach slabs.
4. Remove existing abutments and wingwalls.
5. Construct new integral abutments on MSE walls.
6. Construct concrete seat extensions for new elastomeric bearings on Pier 1 and Pier 2.
7. Construct proposed W27 steel beam superstructure with 8" concrete deck and approach slabs and reattach utilities.
8. Formed concrete repair and epoxy crack sealing on substructure units.
9. Remove, store and reinstall existing sign structures.
10. Graffiti removal.
11. Apply concrete sealant to proposed MSE wall and pier faces adjacent to I-290.

DESIGN SPECIFICATIONS

(NEW CONSTRUCTION)
2024 AASHTO LRFD Bridge Design Specifications, 10th Edition
2006 FHWA Seismic Retrofitting Manual for Highway Structures

DESIGN STRESSES

FIELD UNITS
(NEW CONSTRUCTION)
f'c = 4,000 psi (Superstructure Concrete)
f'c = 3,500 psi (Substructure Concrete)
fy = 60,000 psi (Reinforcement)
fy = 50,000 psi (M270 Grade 50), (HDG)

FIELD UNITS
(EXISTING CONSTRUCTION)
f'c = 3,000 psi
fy = 40,000 psi (Reinforcement)

PRECAST UNITS
f'c = 4,000 psi (MSE Wall Panels)

LOADING HL-93

Allow 25#/sq. ft. for future wearing surface.
LL+IM Deflection = L/1,000

SEISMIC DATA

Seismic Retrofit Category (SRC) = B
Design Spectral Acceleration at 1.0 sec. (S_{D1}) = 0.086g
Design Spectral Acceleration at 0.2 sec. (S_{DS}) = 0.146g
Soil Site Class = D
Performance Level (PL) = PL2

APPROVED
For Structural Adequacy Only
Engineer of Bridges & Structures

JUNSHAN LIU 081-008224 LICENSED STRUCTURAL ENGINEER STATE OF ILLINOIS

ACCURATE GROUP, INC.
JUNSHAN LIU, PhD, P.E., S.E.
NO. 081-008224
EXP.: 11/30/2026
FOR SHEETS S-12 TO S-15

EWA K. MROCZEK 081-006067 LICENSED STRUCTURAL ENGINEER STATE OF ILLINOIS CHICAGO, IL

COLLINS ENGINEERS, INC.
EWA MROCZEK, P.E., S.E.
NO. 081-006067
EXP.: 11/30/2026
FOR SHEETS S-1 TO S-11 AND S-16 TO S-37

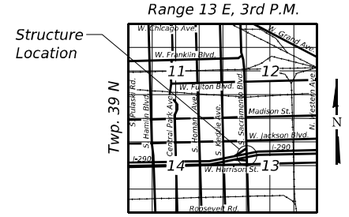

LOCATION SKETCH

GENERAL PLAN AND ELEVATION
SACRAMENTO BLVD. OVER F.A.I. RTE. 290
(EISENHOWER EXPRESSWAY) & CTA
F.A.U. RTE. 2833 - SECTION 2019-192B-R
COOK COUNTY
STATION 8+16.86
STRUCTURE NO. 016-0754

COLLINS ENGINEERS INC.

USER NAME =	DESIGNED - MPR	REVISED -	
	CHECKED - EKM	REVISED -	
PLOT SCALE =	DRAWN - KGZ	REVISED -	
PLOT DATE =	CHECKED - EKM	REVISED -	

STATE OF ILLINOIS
DEPARTMENT OF TRANSPORTATION

SHEET S-1 OF S-37 SHEETS

F.A.I. RTE.	SECTION	COUNTY	TOTAL SHEETS	SHEET NO.
290	2019-192-B-R	COOK	237	142
		CONTRACT NO. 62K65		
	ILLINOIS	FED. AID PROJECT NHPP-EW4T(947)		

MODEL: Default
FILE NAME: P:\10cli\1441-IDOT - Sacramento and Paulina over I-290\Work\CADD\Sacramento - Contract 62K65\CADD_Sheets\Structural\D162K65-016075s-001-GPE.dgn
10/13/2025 4:33:12 PM

GENERAL NOTES:

1. All structural steel shall be galvanized. See special provision for "Hot Dip Galvanizing for Structural Steel".

2. Calculated weight of structural steel:
   Grade 50 = 657,760 lbs
   Grade 36 = 32,710 lbs

3. No field welding is permitted except as specified in the contract documents.

4. Fasteners shall be ASTM F3125 Grade A325 Type 1. Fasteners shall be hot dip galvanized. See special provision for "Hot Dip Galvanizing for Structural Steel". Bolts ⅞" Ø, holes $1^{5}/_{16}$" Ø, unless otherwise noted.

5. Reinforcement bars designated (E) shall be epoxy coated.

6. The finishing machine rails shall be placed on the top of the top flange of the exterior beams within the deck pour. Beam blocks shall be placed between beams at all tie locations in each bay for the full width of the deck pour.

7. Slipforming of the parapets is not allowed.

8. Bearing seat surfaces shall be constructed or adjusted to the designated elevations within a tolerance of ⅛" (0.01 ft.). Adjustment shall be made either by grinding the surface or by shimming the bearings.

9. A Concrete Sealer shall be applied to all new and repaired concrete on piers and to the existing pier faces adjacent to I-290. The Concrete Sealer shall be a "film forming" type for horizontal surfaces. Before the sealer application, existing surfaces shall be power washed in accordance with the applicable portions of Section 592 of the latest IDOT Standard specifications for Road and Bridge Construction.

10. Plan dimensions and details relative to existing plans are subject to nominal construction variations. The Contractor shall field verify existing dimensions and details affecting new construction and make necessary approved adjustments prior to construction or ordering of materials. Such variations shall not be cause for additional compensation for a change in scope of the work, however, the Contractor will be paid for the quantity actually furnished at the unit price bid for the work.

11. The existing structural steel coating contains lead. The Contractor shall take appropriate precautions to deal with the presence of lead on this project.

12. The existing utilities attached to the bridge contain asbestos. The Contractor shall take appropriate precautions to address the presence of asbestos on this project. The removal procedure shall comply with all City of Chicago, State, and Federal regulations.

13. Salvaged materials shall be delivered to the District Maintenance Yard as directed by the Engineer. Cost included with Removal of Existing Superstructures.

14. The Contractor shall submit Full Construction Process Plan to CTA for review and approval. Contractor shall minimize impacts to Rail Operations. See Special Provisions.

15. Bridge fence railing, curved shall be galvanized.

16. The Contractor shall salvage the existing aluminum Bridge Railing including all posts, railings, all attachments and the aluminum Pedestrian Fence and Railing. The aluminum Bridge Railing and aluminum Pedestrian Fence and Railing shall be transported and unloaded by the Contractor to the District Bridge Yard in Elk Grove Village at 1101 Biesterfiled Road during the week days Monday-Friday, and between the hours of 8 am and 2 pm. The Contractor shall notify the District Bridge Office 48 hours in advance of the delivery at (847) 956-1444. Cost included in Removal of Existing Structure.

INDEX OF SHEETS

S-1	General Plan and Elevation
S-2	General Data
S-3	General Sections
S-4	Substructure Layout
S-5	Removal Plan and Elevation
S-6	Top of Slab Elevations I
S-7	Top of Slab Elevations II
S-8	Top of Slab Elevations III
S-9	Top of Slab Elevations IV
S-10	Top of South Approach Slab Elevations
S-11	Top of North Approach Slab Elevations
S-12	Superstructure
S-13	Superstructure Details I
S-14	Superstructure Details II
S-15	Concrete Diaphragm Details
S-16	Parapet Reveal Details
S-17	Bridge Approach Slab Details (Sheet 1 of 2)
S-18	Bridge Approach Slab Details (Sheet 2 of 2)
S-19	Bridge Fence Railing, Curved (Sheet 1 of 2)
S-20	Bridge Fence Railing, Curved (Sheet 2 of 2)
S-21	Aluminum Railing Type L
S-22	Steel Framing Plan and Details
S-23	Moment Reaction Tables
S-24	Structural Steel Details
S-25	Bearing Details
S-26	South Abutment Details
S-27	North Abutment Details
S-28	Wingwall Details
S-29	MSE Wall Details I
S-30	MSE Wall Details II
S-31	Pier 1 Repairs
S-32	Pier 1 Cap Concrete Extension
S-33	Pier 2 Repairs
S-34	Pier 2 Cap Concrete Extension
S-35	HP Pile Details
S-36 - S-37	Soil Boring Logs

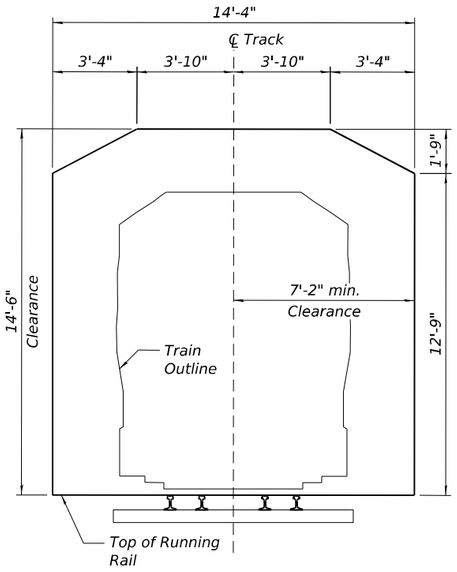

CTA TRAIN CLEARANCE DIAGRAM

TOTAL BILL OF MATERIAL

ITEM	UNIT	SUPER	SUB	TOTAL
AGGREGATE SUBGRADE IMPROVEMENT	CU YD		250	250
REMOVAL OF EXISTING SUPERSTRUCTURES	EACH	1		1
CONCRETE REMOVAL	CU YD		625.6	625.6
PROTECTIVE SHIELD	SQ YD	1,612		1,612
STRUCTURE EXCAVATION	CU YD		3,809	3,809
REMOVAL AND DISPOSAL OF UNSUITABLE MATERIAL FOR STRUCTURES	CU YD		250	250
CONCRETE STRUCTURES	CU YD		150.0	150.0
CONCRETE SUPERSTRUCTURE	CU YD	795.3		795.3
BRIDGE DECK GROOVING	SQ YD	1,637		1,637
PROTECTIVE COAT	SQ YD	2,574		2,574
CONCRETE SUPERSTRUCTURE (APPROACH SLAB)	CU YD	193.1		193.1
FURNISHING AND ERECTING STRUCTURAL STEEL	L SUM	1		1
STUD SHEAR CONNECTORS	EACH	15,330		15,330
REINFORCEMENT BARS, EPOXY COATED	POUND	231,790	30,470	262,260
ALUMINUM RAILING, TYPE L	FOOT	104		104
BRIDGE FENCE RAILING, CURVED	FOOT	494		494
FURNISHING STEEL PILES HP14x89	FOOT		1,125	1,125
DRIVING PILES	FOOT		1,125	1,125
TEST PILE STEEL HP14X89	EACH		2	2
PILE SHOES	EACH		20	20
NAME PLATES	EACH	1		1
ELASTOMERIC BEARING ASSEMBLY, TYPE I	EACH	20		20
ANCHOR BOLTS, 3/4"	EACH		40	40
ANCHOR BOLTS, 1"	EACH		40	40
TEMPORARY SHEET PILING	SQ FT		2,090	2,090
MECHANICALLY STABILIZED EARTH RETAINING WALL	SQ FT		4,357	4,357
CONCRETE SEALER	SQ FT		3,786	3,786
EPOXY CRACK INJECTION	FOOT		19	19
PIPE UNDERDRAINS FOR STRUCTURES 4"	FOOT		388	388
GRAFFITI REMOVAL	SQ YD		72	72
REMOVAL OF ASBESTOS CEMENT CONDUIT	FOOT	1,974		1,974
BAR TERMINATORS	EACH	424	712	1,136
STRUCTURAL REPAIR OF CONCRETE (DEPTH EQUAL TO OR LESS THAN 5 INCHES)	SQ FT		661	661
STRUCTURAL REPAIR OF CONCRETE (DEPTH GREATER THAN 5 INCHES)	SQ FT		44	44

STATION 8+16.86
RE-BUILT 202_ BY
STATE OF ILLINOIS
F.A.I. 290
SEC. 2019-192B-R
LOADING HL-93
STRUCTURE NO. 016-0754

NAME PLATE

See Std. 515001

Existing Name Plate shall be cleaned and relocated next to new Name Plate. Cost included with Name Plate.

CURVE DATA

Exist. Curve 290 EB 6
P.I. Sta. = 1063+59.51
Δ = 1°12'15" (RT)
D = 0°46'51"
R = 7,336.76'
T = 77.09'
L = 154.18'
E = 0.41'
P.C. Sta. = 1062+82.41
P.T. Sta. = 1064+36.60

CURVE DATA

Exist. Curve 290 EB 7
P.I. Sta. = 1065+93.25
Δ = 2°26'47" (RT)
D = 0°46'52"
R = 7,336.30'
T = 156.65'
L = 313.25'
E = 1.67'
P.C. Sta. = 1064+36.60
P.T. Sta. = 1067+49.85

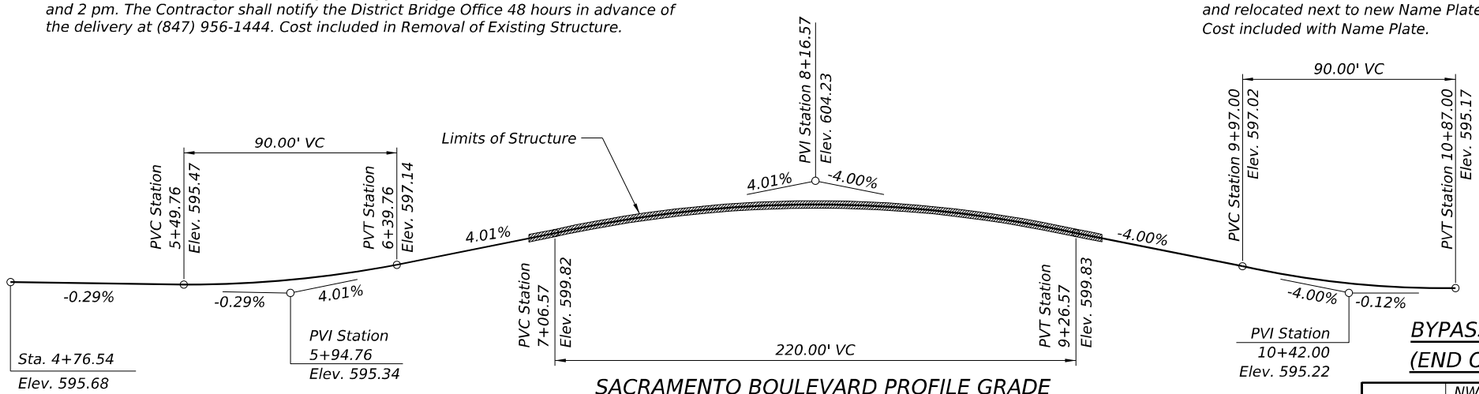

SACRAMENTO BOULEVARD PROFILE GRADE

Along ℄ Sacramento Blvd. See Sheet S-1 for PGL location

BYPASS FLOWRATE FROM BRIDGE LIMITS (END OF APPROACH SLAB) TO ROADWAY

	NW Curbline	SW Curbline	NE Curbline	SE Curbline
Q (C.F.S.)	1.21	1.21	1.21	1.21

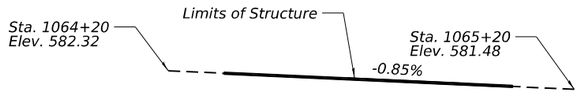

EXIST. WB I-290 PROFILE GRADE

(Along WB I-290 Alignment)

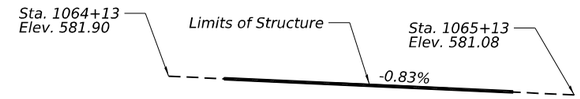

EXIST. EB I-290 PROFILE GRADE

(Along EB I-290 Alignment)

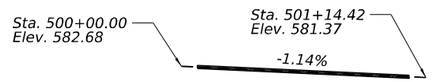

EXIST. WB CTA TRACKS PROFILE GRADE

(Along WB CTA Tracks Alignment)



EXIST. EB CTA TRACKS PROFILE GRADE

(Along EB CTA Tracks Alignment)

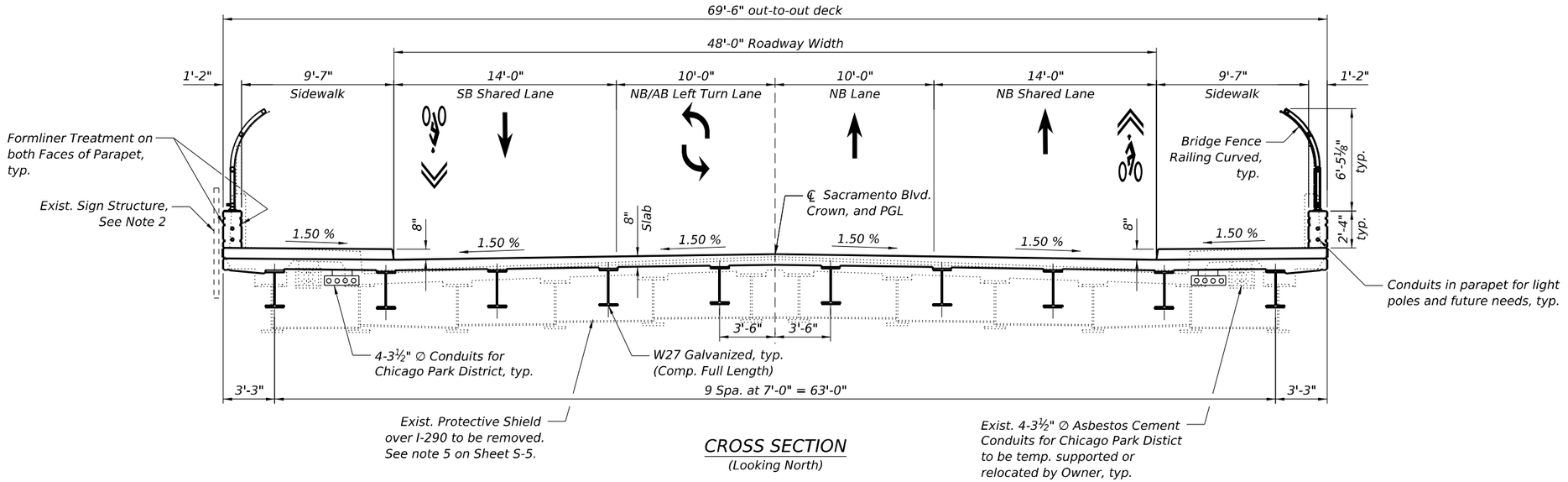

CROSS SECTION
(Looking North)

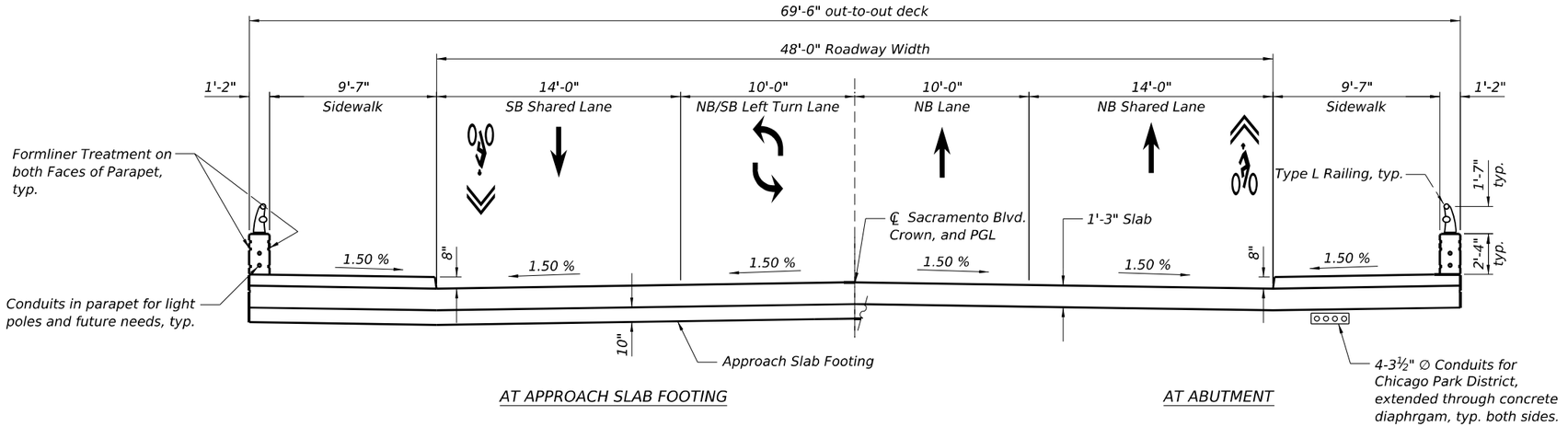

AT APPROACH SLAB FOOTING

AT ABUTMENT

CROSS SECTION - APPROACH SLAB
(Looking North)

NOTES:

1. A detour is proposed during the construction of the bridge.
2. Existing sign panels attached to superstructure to be removed, stored, and reattached. See Roadway Plans and Sheets SA-1 - SA-3.
3. The existing utility conduits contain asbestos and shall be replaced. Cost included with "Removal of Asbestos Cement Conduit".
4. Existing utilities between girders will be supported or relocated by the utility owner to provide uninterrupted service during construction.
5. Contractor shall coordinate attachment of existing or proposed utilities to the structure, including the type and location of the inserts to be embedded in the concrete deck. Inserts may be required to be installed by the Contractor during formwork construction.
6. Existing permanent protective shield to be removed. Cost included with "Removal of Existing Superstructures". See note 5 on Sheet S-5 for more information.
7. Removal of existing railing, joints, bearings, light posts, and all other appurtenances is included with "Removal of Existing Superstructures" pay item.
8. The Contractor shall protect the CTA tracks and I-290 traffic from falling debris during construction. Protective Shield shall be provided to protect CTA ROW during bridge demolition and construction activities in accordance with CTA requirements. Cost included with "Protective Shield" pay item.
9. Temporary shoring tower locations on the CTA ROW, if required for the beams erection, need to be included in the Construction Process Plan submitted by the Contractor to CTA for review. Cost included with "Furnishing and Erecting Structural Steel" pay item.
10. Temporary shoring towers will not be allowed on I-290 lanes or shoulders. Beam segments may be connected prior to erection operation to avoid temporary shoring towers on I-290.

MODEL: Default
FILE NAME: P:\10-IL\14441-IDOT - Sacramento and Paulina over I-290\Work\CADD\Sacramento - Contract 62K65\CADD_Sheets\Structural\ID-162K65-0160754-003-Sections.dgn
10/13/2025 4:33:18 PM

COLLINS ENGINEERS INC.

USER NAME =	DESIGNED - MPR	REVISED -	
	CHECKED - EKM	REVISED -	
PLOT SCALE =	DRAWN - KGZ	REVISED -	
PLOT DATE =	CHECKED - EKM	REVISED -	

STATE OF ILLINOIS
DEPARTMENT OF TRANSPORTATION

GENERAL SECTIONS
STRUCTURE NO. 016-0754
SHEET S-3 OF S-37 SHEETS

F.A.I. RTE.	SECTION	COUNTY	TOTAL SHEETS	SHEET NO.
290	2019-192-B-R	COOK	237	144
		CONTRACT NO. 62K65		
	ILLINOIS	FED. AID PROJECT NHPP-EW4T(947)		

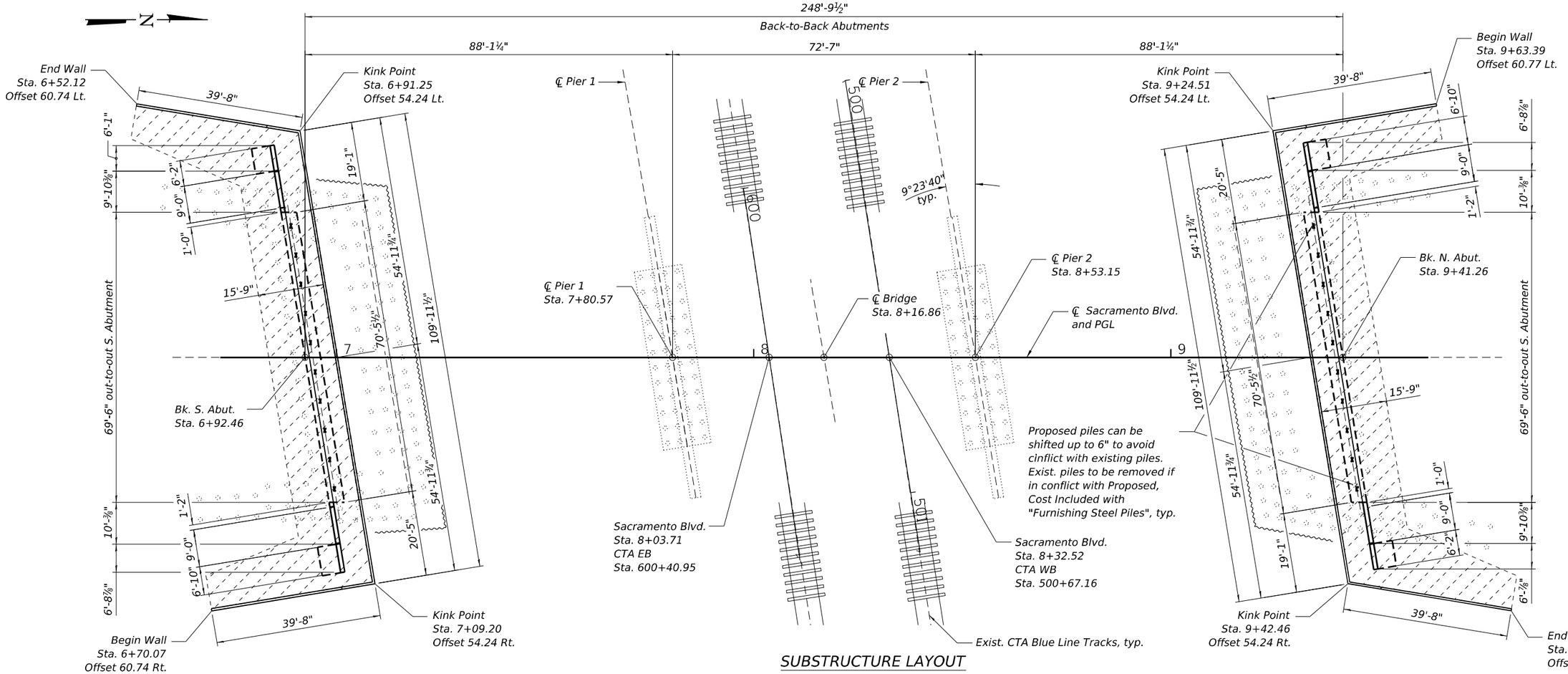

SUBSTRUCTURE LAYOUT

LEGEND:

MSE Soil Mass

Temporary Sheet Piling

Note:
If the Contractor chooses to alter the temporary cantilevered sheet piling design requirements shown on the plans, a design submittal including plan details and calculations will be required for review and acceptance by the Engineer.

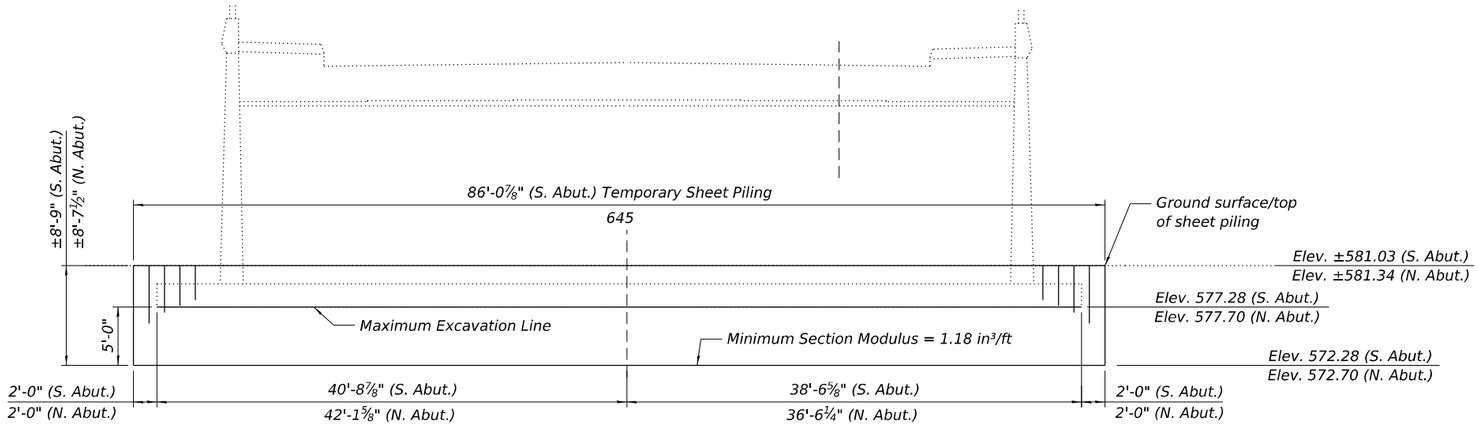

TEMPORARY SHEET PILING ELEVATION

(South Abutment looking South and North Abutment looking North)
Temporary Sheet Piling to be installed to avoid I-290 pavement removal.

BILL OF MATERIAL

ITEM	UNIT	QUANTITY
Temporary Sheet Piling	Sq. Ft.	2,090

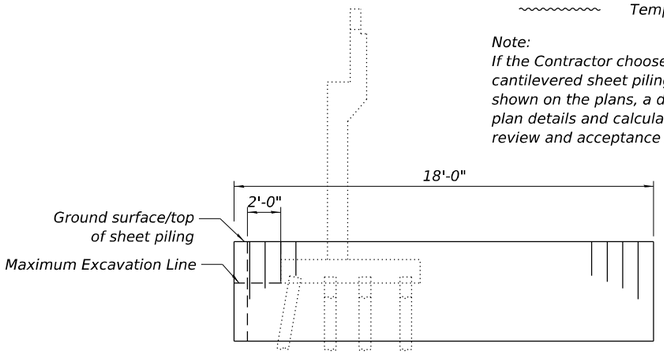

SECTION THRU EXIST. ABUTMENT

MODEL: Default
FILE NAME: P:\10-LL14411-IDOT - Sacramento and Paulina over I-290\Work\CADD\Sacramento - Contract 62K65\CADD_Sheets\StructuralID162K65-0160754-004-substructure_layout.dgn
10/13/2025 4:33:21 PM

COLLINS ENGINEERS INC.

USER NAME =	DESIGNED - MPR	REVISED -
	CHECKED - EKM	REVISED -
PLOT SCALE =	DRAWN - KGZ	REVISED -
PLOT DATE =	CHECKED - EKM	REVISED -

STATE OF ILLINOIS
DEPARTMENT OF TRANSPORTATION

SUBSTRUCTURE LAYOUT
STRUCTURE NO. 016-0754
SHEET S-4 OF S-37 SHEETS

F.A.I. RTE.	SECTION	COUNTY	TOTAL SHEETS	SHEET NO.
290	2019-192-B-R	COOK	237	145
		CONTRACT NO. 62K65		
	ILLINOIS	FED. AID PROJECT NHPP-EW4T(947)		

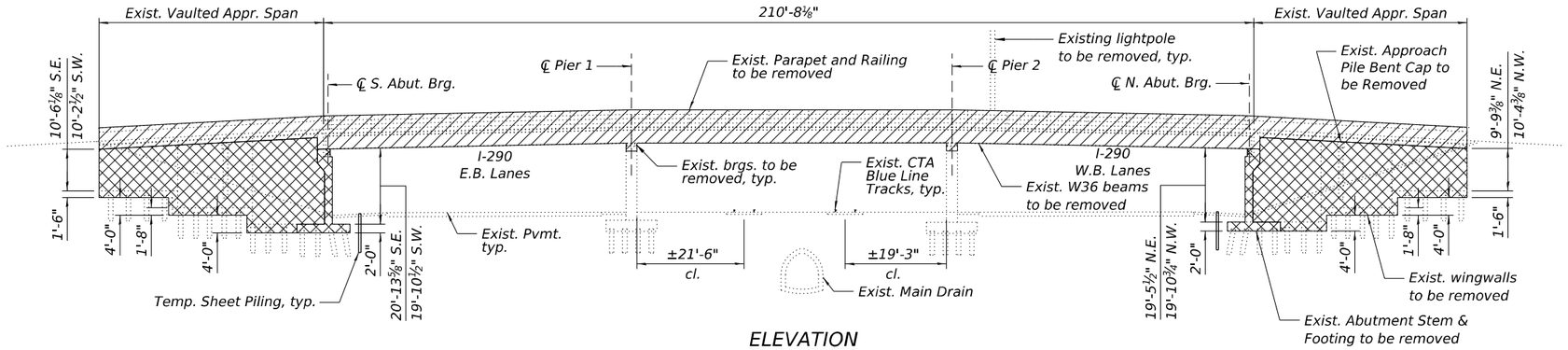

ELEVATION

(Looking West)

NOTES

1. Existing utilities between girders and overhead will be relocated to provide uninterrupted service during construction (by others). Utilities to be incorporated into new structure (by others).
2. The Contractor is responsible to protect the CTA tracks and I-290 traffic from falling objects and debris during all phases of construction.
3. For existing approach slab, sidewalk, curb and gutter, and pavement removal quantities, see Roadway plans.
4. Existing vaulted approach spans, bearings, bridge fence railing, and parapet removal cost included with Removal of Existing Superstructures.
5. The Contractor may reuse the existing protective shield, provided their Structural Engineer verifies its adequacy per Standard Specifications 501.03 and provide calculations of its adequacy for approval. The Contractor shall be fully responsible for the system, including reuse of any existing material, and the calculations shall detail all required supplemental and/or replacement material and be sealed by an Illinois SE. The Contractor will be paid for the plan area shown for Protective Shield, which will include existing protective shield (if being reused), any supplemental materials, and/or new protective shield. The cost for evaluation, calculations, supplemental materials, new materials, and installation/removal is included in the pay item Protective Shield.
6. For Pier 1 Concrete Removal, see Sheet S-31.
7. For Pier 2 Concrete Removal, see Sheet S-33.

BILL OF MATERIAL

ITEM	UNIT	TOTAL
Removal of Existing Superstructure	Each	1
Concrete Removal	Cu. Yd.	615.7
Protective Shield	Sq. Yd.	1,612
Removal of Asbestos Cement Conduit	Foot	1,974

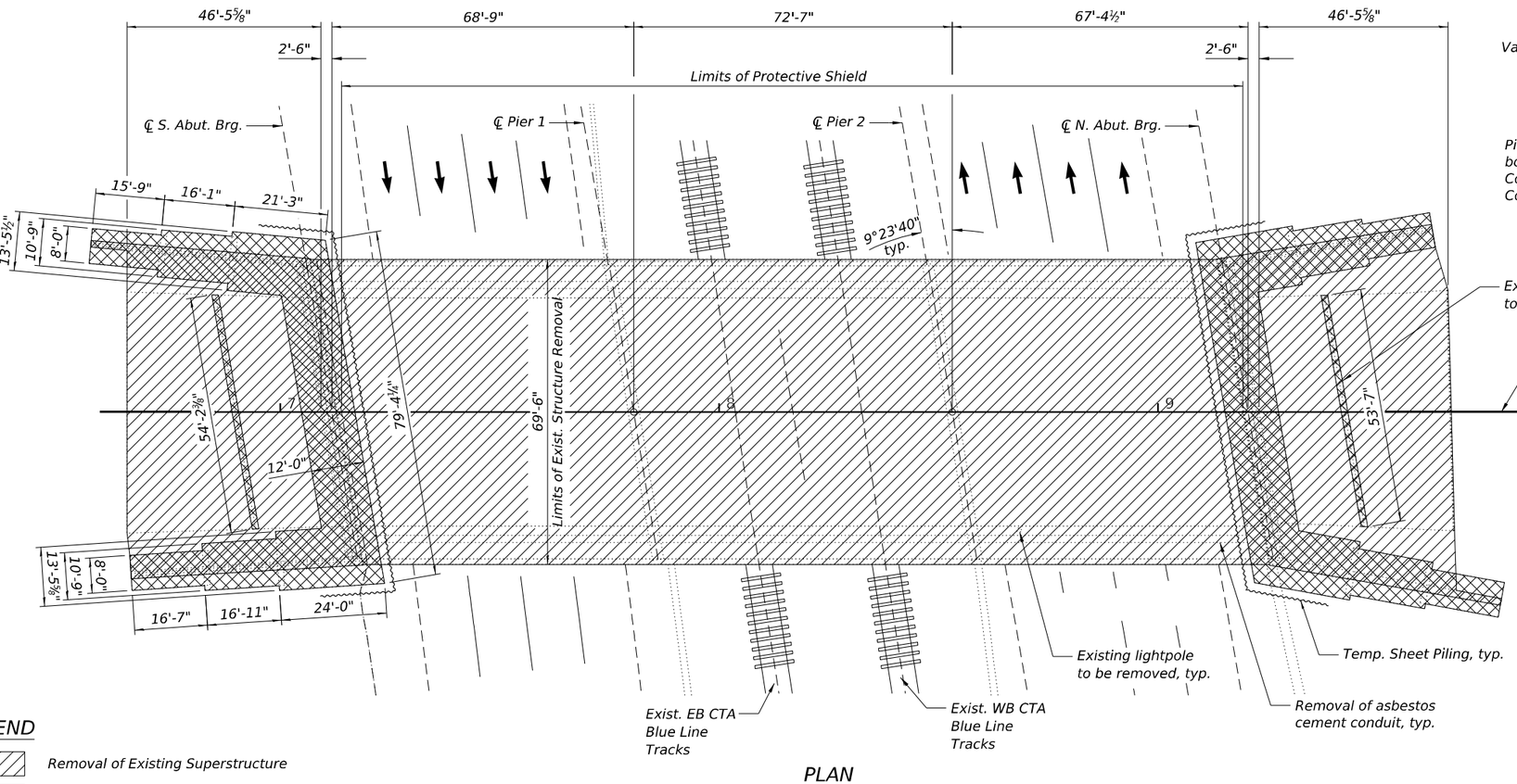

PLAN

LEGEND

- Removal of Existing Superstructure
- Concrete Removal

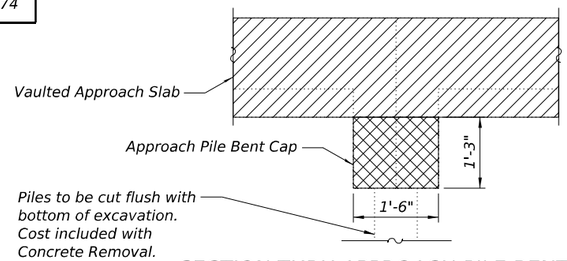

SECTION THRU APPROACH PILE BENT CAP

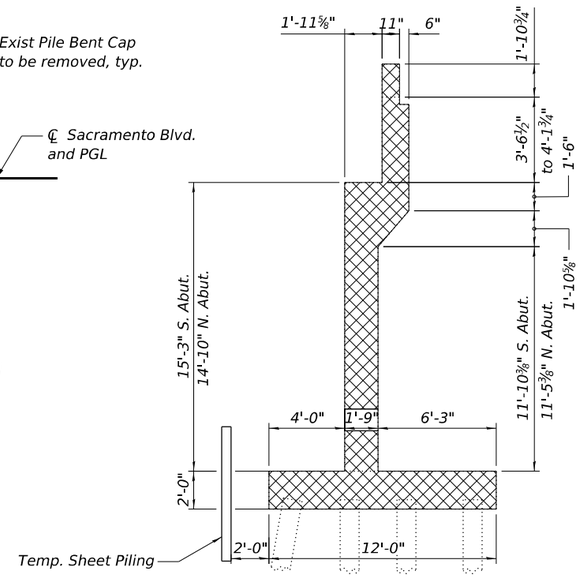

SECTION THRU EXIST. ABUTMENT

USER NAME =	DESIGNED - MPR	REVISED -	STATE OF ILLINOIS DEPARTMENT OF TRANSPORTATION
	CHECKED - EKM	REVISED -	
PLOT SCALE =	DRAWN - KGZ	REVISED -	
PLOT DATE =	CHECKED - EKM	REVISED -	

REMOVAL PLAN AND ELEVATION
STRUCTURE NO. 016-0754
SHEET S-5 OF S-37 SHEETS

F.A.I. RTE.	SECTION	COUNTY	TOTAL SHEETS	SHEET NO.
290	2019-192-B-R	COOK	237	146
		CONTRACT NO. 62K65		
	ILLINOIS	FED. AID PROJECT NHPP-EW4T(947)		

COLLINS ENGINEERS INC.

MODEL: Default
FILE NAME: P:\10-IL\14411-IDOT - Sacramento and Paulina over I-290\Work\CADD\Sacramento - Contract 62K65\CADD_Sheets\Structural\D162K65-016075d-005-removal_plan.dgn
10/13/2025 4:33:23 PM

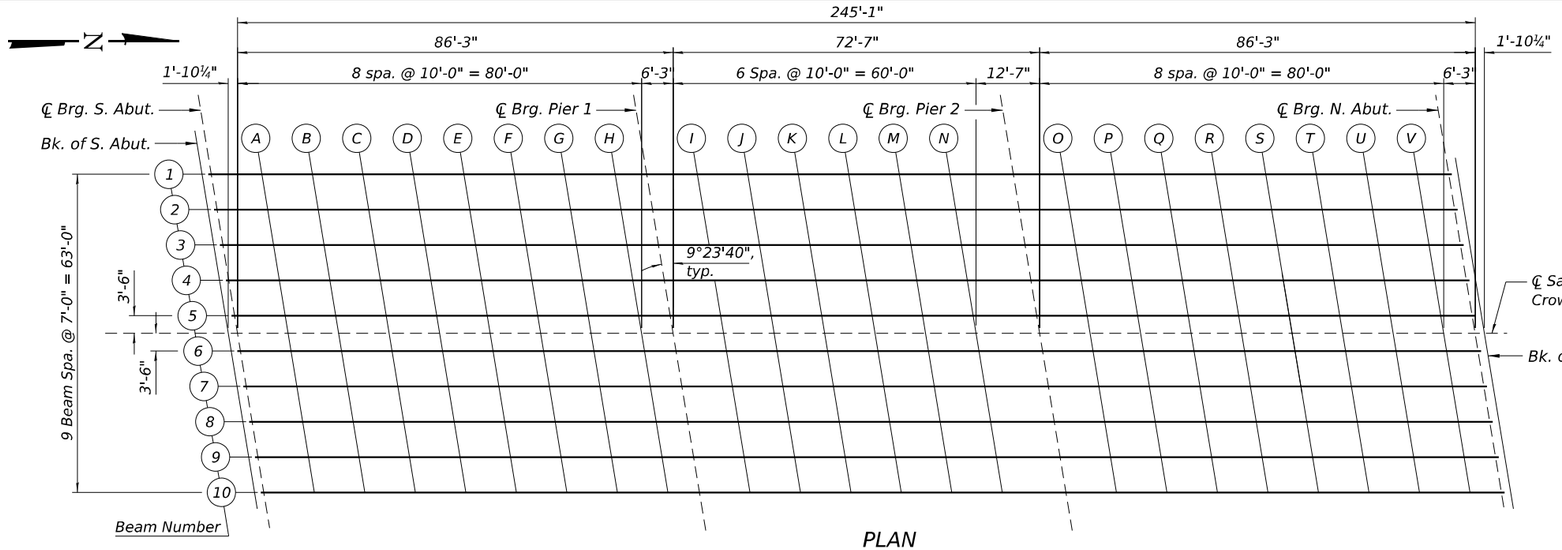

PLAN

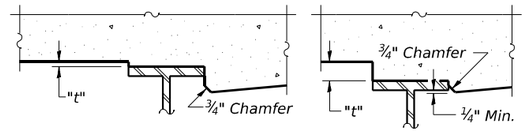

To determine "t": After all structural steel has been erected, elevations of the top flanges of the beams shall be taken at intervals shown in the plan. These elevations subtracted from the "Theoretical Grade Elevations Adjusted for Dead Load Deflection" shown below and on Sheets S-7 thru S-9, minus slab thickness, equals the fillet heights "t" above top flange of beams.

FILLET HEIGHTS

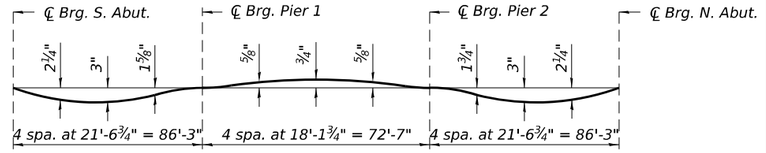

DEAD LOAD DEFLECTION DIAGRAM

(Includes weight of concrete only.)

Note:
The above deflections are not to be used in the field if the engineer is working from the grade elevations adjusted for dead load deflections as shown on this Sheet and on Sheets S-7 thru S-9.

BEAM 1

Location	Station	Offset	Theoretical Grade Elevations	Theoretical Grade Elevations Adjusted For Dead Load Deflection
Bk. S. Abut.	6+87.25	-31.50	598.80	598.80
℄ Brg. S. Abut.	6+89.11	-31.50	598.87	598.87
A	6+99.11	-31.50	599.27	599.37
B	7+09.11	-31.50	599.67	599.85
C	7+19.11	-31.50	600.05	600.28
D	7+29.11	-31.50	600.38	600.63
E	7+39.11	-31.50	600.68	600.91
F	7+49.11	-31.50	600.95	601.12
G	7+59.11	-31.50	601.18	601.28
H	7+69.11	-31.50	601.37	601.40
℄ Brg. Pier 1	7+75.36	-31.50	601.47	601.47
I	7+85.36	-31.50	601.60	601.57
J	7+95.36	-31.50	601.70	601.64
K	8+05.36	-31.50	601.76	601.69
L	8+15.36	-31.50	601.78	601.72
M	8+25.36	-31.50	601.77	601.71
N	8+35.36	-31.50	601.72	601.67
℄ Brg. Pier 2	8+47.94	-31.50	601.60	601.60
O	8+57.94	-31.50	601.47	601.53
P	8+67.94	-31.50	601.30	601.43
Q	8+77.94	-31.50	601.10	601.29
R	8+87.94	-31.50	600.86	601.09
S	8+97.94	-31.50	600.58	600.83
T	9+07.94	-31.50	600.26	600.49
U	9+17.94	-31.50	599.91	600.07
V	9+27.94	-31.50	599.53	599.59
℄ Brg. N. Abut.	9+34.19	-31.50	599.28	599.28
Bk. N. Abut.	9+36.05	-31.50	599.20	599.20

BEAM 2

Location	Station	Offset	Theoretical Grade Elevations	Theoretical Grade Elevations Adjusted For Dead Load Deflection
Bk. S. Abut.	6+88.41	-24.50	598.74	598.74
℄ Brg. S. Abut.	6+90.27	-24.50	598.81	598.81
A	7+00.27	-24.50	599.21	599.31
B	7+10.27	-24.50	599.61	599.79
C	7+20.27	-24.50	599.98	600.21
D	7+30.27	-24.50	600.32	600.56
E	7+40.27	-24.50	600.61	600.83
F	7+50.27	-24.50	600.87	601.04
G	7+60.27	-24.50	601.10	601.20
H	7+70.27	-24.50	601.28	601.32
℄ Brg. Pier 1	7+76.52	-24.50	601.38	601.38
I	7+86.52	-24.50	601.51	601.47
J	7+96.52	-24.50	601.60	601.55
K	8+06.52	-24.50	601.66	601.59
L	8+16.52	-24.50	601.67	601.61
M	8+26.52	-24.50	601.66	601.60
N	8+36.52	-24.50	601.60	601.56
℄ Brg. Pier 2	8+49.10	-24.50	601.48	601.48
O	8+59.10	-24.50	601.35	601.41
P	8+69.10	-24.50	601.18	601.31
Q	8+79.10	-24.50	600.97	601.16
R	8+89.10	-24.50	600.72	600.96
S	8+99.10	-24.50	600.44	600.69
T	9+09.10	-24.50	600.12	600.34
U	9+19.10	-24.50	599.77	599.92
V	9+29.10	-24.50	599.38	599.44
℄ Brg. N. Abut.	9+35.35	-24.50	599.13	599.13
Bk. N. Abut.	9+37.20	-24.50	599.05	599.05

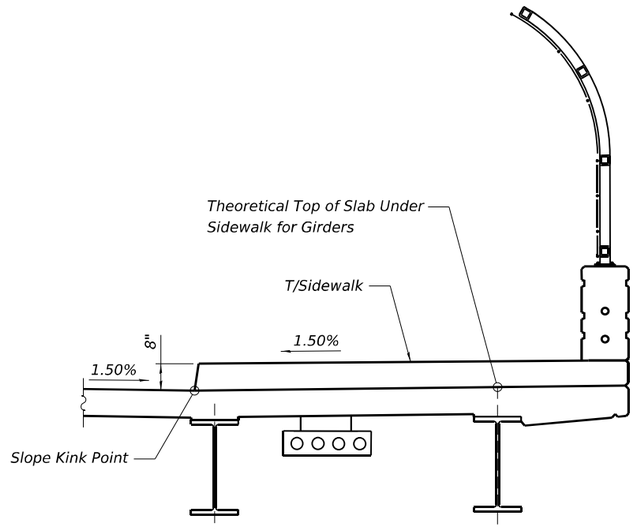

LOCATION OF ELEVATION UNDER SIDEWALK

MODEL: Default
FILE NAME: P:\10+Li\14411-IDOT - Sacramento and Paulina over I-290\Work\CADD\Sacramento - Contract 62K65\CADD_Sheets\Structural\D162K65-0160754-006+os_Elev_1.dgn
10/13/2025 4:33:25 PM

COLLINS ENGINEERS INC.

USER NAME =	DESIGNED - MPR	REVISED -
	CHECKED - EKM	REVISED -
PLOT SCALE =	DRAWN - KGZ	REVISED -
PLOT DATE =	CHECKED - EKM	REVISED -

STATE OF ILLINOIS
DEPARTMENT OF TRANSPORTATION

TOP OF SLAB ELEVATIONS I
STRUCTURE NO. 016-0754
SHEET S-6 OF S-37 SHEETS

F.A.I. RTE.	SECTION	COUNTY	TOTAL SHEETS	SHEET NO.
290	2019-192-B-R	COOK	237	147
		CONTRACT NO. 62K65		
	ILLINOIS	FED. AID PROJECT NHPP-EW4T(947)		

BEAM 3

Location	Station	Offset	Theoretical Grade Elevations	Theoretical Grade Elevations Adjusted For Dead Load Deflection
Bk. S. Abut.	9+89.57	-17.50	598.88	598.88
℄ Brg. S. Abut.	6+91.42	-17.50	598.95	598.95
A	7+01.42	-17.50	599.35	599.45
B	7+11.42	-17.50	599.75	599.93
C	7+21.42	-17.50	600.11	600.35
D	7+31.42	-17.50	600.44	600.69
E	7+41.42	-17.50	600.73	600.96
F	7+51.42	-17.50	600.99	601.16
G	7+61.42	-17.50	601.21	601.31
H	7+71.42	-17.50	601.39	601.43
℄ Brg. Pier 1	7+77.67	-17.50	601.49	601.49
I	7+87.67	-17.50	601.61	601.58
J	7+97.67	-17.50	601.70	601.64
K	8+07.67	-17.50	601.75	601.69
L	8+17.67	-17.50	601.76	601.70
M	8+27.67	-17.50	601.74	601.68
N	8+37.67	-17.50	601.68	601.64
℄ Brg. Pier 2	8+50.26	-17.50	601.56	601.56
O	8+60.26	-17.50	601.42	601.48
P	8+70.26	-17.50	601.24	601.37
Q	8+80.26	-17.50	601.03	601.23
R	8+90.26	-17.50	600.78	601.02
S	9+00.26	-17.50	600.49	600.74
T	9+10.26	-17.50	600.17	600.39
U	9+20.26	-17.50	599.81	599.97
V	9+30.26	-17.50	599.42	599.48
℄ Brg. N. Abut.	9+36.51	-17.50	599.17	599.17
Bk. N. Abut.	9+38.36	-17.50	599.10	599.10

BEAM 4

Location	Station	Offset	Theoretical Grade Elevations	Theoretical Grade Elevations Adjusted For Dead Load Deflection
Bk. S. Abut.	6+90.73	-10.50	599.03	599.03
℄ Brg. S. Abut.	6+92.58	-10.50	599.10	599.10
A	7+02.58	-10.50	599.50	599.60
B	7+12.58	-10.50	599.90	600.08
C	7+22.58	-10.50	600.26	600.49
D	7+32.58	-10.50	600.58	600.83
E	7+42.58	-10.50	600.87	601.09
F	7+52.58	-10.50	601.12	601.29
G	7+62.58	-10.50	601.34	601.44
H	7+72.58	-10.50	601.52	601.55
℄ Brg. Pier 1	7+78.83	-10.50	601.61	601.61
I	7+88.83	-10.50	601.73	601.69
J	7+98.83	-10.50	601.81	601.76
K	8+08.83	-10.50	601.86	601.80
L	8+18.83	-10.50	601.87	601.81
M	8+28.83	-10.50	601.84	601.78
N	8+38.83	-10.50	601.78	601.74
℄ Brg. Pier 2	8+51.42	-10.50	601.65	601.65
O	8+61.42	-10.50	601.51	601.57
P	8+71.42	-10.50	601.32	601.46
Q	8+81.42	-10.50	601.11	601.30
R	8+91.42	-10.50	600.85	601.09
S	9+01.42	-10.50	600.56	600.81
T	9+11.42	-10.50	600.24	600.46
U	9+21.42	-10.50	599.87	600.03
V	9+31.42	-10.50	599.48	599.54
℄ Brg. N. Abut.	9+37.67	-10.50	599.23	599.23
Bk. N. Abut.	9+39.52	-10.50	599.16	599.16

BEAM 5

Location	Station	Offset	Theoretical Grade Elevations	Theoretical Grade Elevations Adjusted For Dead Load Deflection
Bk. S. Abut.	6+91.89	-3.50	599.18	599.18
℄ Brg. S. Abut.	6+93.74	-3.50	599.25	599.25
A	7+03.74	-3.50	599.65	599.75
B	7+13.74	-3.50	600.05	600.23
C	7+23.74	-3.50	600.40	600.63
D	7+33.74	-3.50	600.72	600.97
E	7+43.74	-3.50	601.01	601.23
F	7+53.74	-3.50	601.25	601.42
G	7+63.74	-3.50	601.46	601.57
H	7+73.74	-3.50	601.64	601.68
℄ Brg. Pier 1	7+79.99	-3.50	601.73	601.73
I	7+89.99	-3.50	601.85	601.81
J	7+99.99	-3.50	601.92	601.87
K	8+09.99	-3.50	601.97	601.90
L	8+19.99	-3.50	601.97	601.91
M	8+29.99	-3.50	601.94	601.88
N	8+39.99	-3.50	601.88	601.83
℄ Brg. Pier 2	8+52.57	-3.50	601.74	601.74
O	8+62.57	-3.50	601.59	601.65
P	8+72.57	-3.50	601.41	601.54
Q	8+82.57	-3.50	601.18	601.38
R	8+92.57	-3.50	600.93	601.17
S	9+02.57	-3.50	600.63	600.88
T	9+12.57	-3.50	600.30	600.52
U	9+22.57	-3.50	599.93	600.09
V	9+32.57	-3.50	599.54	599.60
℄ Brg. N. Abut.	9+38.82	-3.50	599.29	599.29
Bk. N. Abut.	9+40.68	-3.50	599.21	599.21

MODEL: Default
FILE NAME: P:\IDOT - Sacramento and Paulina over I-290\Work\CADD\Sacramento - Contract 62K65\CADD_Sheets\Structural\D162K65-016075 4-007-tos_elev_2.dgn
10/13/2025 4:33:27 PM

COLLINS ENGINEERS INC.

USER NAME =	DESIGNED - MPR	REVISED -
	CHECKED - EKM	REVISED -
PLOT SCALE =	DRAWN - KGZ	REVISED -
PLOT DATE =	CHECKED - EKM	REVISED -

STATE OF ILLINOIS
DEPARTMENT OF TRANSPORTATION

TOP OF SLAB ELEVATIONS II
STRUCTURE NO. 016-0754
SHEET S-7 OF S-37 SHEETS

F.A.I. RTE.	SECTION	COUNTY	TOTAL SHEETS	SHEET NO.
290	2019-192-B-R	COOK	237	148
		CONTRACT NO. 62K65		
	ILLINOIS	FED. AID PROJECT NHPP-EW4T(947)		

℄ SACRAMENTO BLVD., CROWN, & PGL

Location	Station	Offset	Theoretical Grade Elevations	Theoretical Grade Elevations Adjusted For Dead Load Deflection
Bk. S. Abut.	6+92.47	0.00	599.25	599.25
℄ Brg. S. Abut.	6+94.32	0.00	599.33	599.33
A	7+04.32	0.00	599.73	599.83
B	7+14.32	0.00	600.12	600.30
C	7+24.32	0.00	600.47	600.71
D	7+34.32	0.00	600.79	601.04
E	7+44.32	0.00	601.07	601.30
F	7+54.32	0.00	601.32	601.49
G	7+64.32	0.00	601.53	601.63
H	7+74.32	0.00	601.70	601.74
℄ Brg. Pier 1	7+80.57	0.00	601.79	601.79
I	7+90.57	0.00	601.90	601.87
J	8+00.57	0.00	601.98	601.92
K	8+10.57	0.00	602.02	601.96
L	8+20.57	0.00	602.02	601.96
M	8+30.57	0.00	601.99	601.93
N	8+40.57	0.00	601.92	601.88
℄ Brg. Pier 2	8+53.15	0.00	601.79	601.79
O	8+63.15	0.00	601.63	601.70
P	8+73.15	0.00	601.45	601.58
Q	8+83.15	0.00	601.22	601.42
R	8+93.15	0.00	600.96	601.20
S	9+03.15	0.00	600.67	600.91
T	9+13.15	0.00	600.33	600.55
U	9+23.15	0.00	599.96	600.12
V	9+33.15	0.00	599.57	599.63
℄ Brg. N. Abut.	9+39.40	0.00	599.32	599.32
Bk. N. Abut.	9+41.26	0.00	599.24	599.24

BEAM 6

Location	Station	Offset	Theoretical Grade Elevations	Theoretical Grade Elevations Adjusted For Dead Load Deflection
Bk. S. Abut.	6+93.04	3.50	599.22	599.22
℄ Brg. S. Abut.	6+94.90	3.50	599.30	599.30
A	7+04.90	3.50	599.70	599.80
B	7+14.90	3.50	600.09	600.27
C	7+24.90	3.50	600.44	600.67
D	7+34.90	3.50	600.76	601.00
E	7+44.90	3.50	601.04	601.26
F	7+54.90	3.50	601.28	601.45
G	7+64.90	3.50	601.49	601.59
H	7+74.90	3.50	601.66	601.69
℄ Brg. Pier 1	7+81.15	3.50	601.75	601.75
I	7+91.15	3.50	601.86	601.82
J	8+01.15	3.50	601.93	601.88
K	8+11.15	3.50	601.97	601.91
L	8+21.15	3.50	601.97	601.91
M	8+31.15	3.50	601.94	601.88
N	8+41.15	3.50	601.87	601.82
℄ Brg. Pier 2	8+53.73	3.50	601.73	601.73
O	8+63.73	3.50	601.57	601.63
P	8+73.73	3.50	601.38	601.51
Q	8+83.73	3.50	601.16	601.35
R	8+93.73	3.50	600.89	601.13
S	9+03.73	3.50	600.60	600.84
T	9+13.73	3.50	600.26	600.48
U	9+23.73	3.50	599.89	600.05
V	9+33.73	3.50	599.49	599.56
℄ Brg. N. Abut.	9+39.98	3.50	599.24	599.24
Bk. N. Abut.	9+41.84	3.50	599.17	599.17

BEAM 7

Location	Station	Offset	Theoretical Grade Elevations	Theoretical Grade Elevations Adjusted For Dead Load Deflection
Bk. S. Abut.	6+94.20	10.50	599.17	599.17
℄ Brg. S. Abut.	6+96.06	10.50	599.24	599.24
A	7+06.06	10.50	599.64	599.74
B	7+16.06	10.50	600.03	600.21
C	7+26.06	10.50	600.37	600.61
D	7+36.06	10.50	600.69	600.93
E	7+46.06	10.50	600.96	601.18
F	7+56.06	10.50	601.20	601.37
G	7+66.06	10.50	601.40	601.51
H	7+76.06	10.50	601.57	601.61
℄ Brg. Pier 1	7+82.31	10.50	601.65	601.65
I	7+92.31	10.50	601.76	601.73
J	8+02.31	10.50	601.83	601.78
K	8+12.31	10.50	601.87	601.80
L	8+22.31	10.50	601.86	601.80
M	8+32.31	10.50	601.83	601.77
N	8+42.31	10.50	601.75	601.71
℄ Brg. Pier 2	8+54.89	10.50	601.60	601.60
O	8+64.89	10.50	601.45	601.51
P	8+74.89	10.50	601.25	601.39
Q	8+84.89	10.50	601.02	601.22
R	8+94.89	10.50	600.76	601.00
S	9+04.89	10.50	600.45	600.70
T	9+14.89	10.50	600.11	600.34
U	9+24.89	10.50	599.74	599.89
V	9+34.89	10.50	599.34	599.40
℄ Brg. N. Abut.	9+41.14	10.50	599.09	599.09
Bk. N. Abut.	9+42.99	10.50	599.02	599.02

MODEL: Default
FILE NAME: P:\IOHL\14411-IDOT - Sacramento and Paulina over I-290\Work\CADD\Sacramento - Contract 62K65\CADD_Sheets\Structural\D162K65-0160754-008-tos_elev_2.dgn
10/13/2025 4:33:28 PM

COLLINS ENGINEERS INC.

USER NAME =	DESIGNED - MPR	REVISED -
	CHECKED - EKM	REVISED -
PLOT SCALE =	DRAWN - KGZ	REVISED -
PLOT DATE =	CHECKED - EKM	REVISED -

STATE OF ILLINOIS
DEPARTMENT OF TRANSPORTATION

TOP OF SLAB ELEVATIONS III
STRUCTURE NO. 016-0754
SHEET S-8 OF S-37 SHEETS

F.A.I. RTE.	SECTION	COUNTY	TOTAL SHEETS	SHEET NO.
290	2019-192-B-R	COOK	237	149
		CONTRACT NO. 62K65		
	ILLINOIS	FED. AID PROJECT NHPP-EW4T(947)		

BEAM 8

Location	Station	Offset	Theoretical Grade Elevations	Theoretical Grade Elevations Adjusted For Dead Load Deflection
Bk. S. Abut.	6+95.36	17.50	599.11	599.11
℄ Brg. S. Abut.	6+97.22	17.50	599.18	599.18
A	7+07.22	17.50	599.58	599.68
B	7+17.22	17.50	599.96	600.15
C	7+27.22	17.50	600.31	600.54
D	7+37.22	17.50	600.62	600.86
E	7+47.22	17.50	600.89	601.11
F	7+57.22	17.50	601.12	601.29
G	7+67.22	17.50	601.32	601.42
H	7+77.22	17.50	601.48	601.52
℄ Brg. Pier 1	7+83.47	17.50	601.56	601.56
I	7+93.47	17.50	601.67	601.63
J	8+03.47	17.50	601.73	601.68
K	8+13.47	17.50	601.76	601.70
L	8+23.47	17.50	601.76	601.69
M	8+33.47	17.50	601.71	601.65
N	8+43.47	17.50	601.63	601.59
℄ Brg. Pier 2	8+56.05	17.50	601.48	601.48
O	8+66.05	17.50	601.32	601.38
P	8+76.05	17.50	601.12	601.26
Q	8+86.05	17.50	600.89	601.09
R	8+96.05	17.50	600.62	600.86
S	9+06.05	17.50	600.31	600.56
T	9+16.05	17.50	599.97	600.19
U	9+26.05	17.50	599.59	599.74
V	9+36.05	17.50	599.19	599.25
℄ Brg. N. Abut.	9+42.30	17.50	598.94	598.94
Bk. N. Abut.	9+44.15	17.50	598.87	598.87

BEAM 9

Location	Station	Offset	Theoretical Grade Elevations	Theoretical Grade Elevations Adjusted For Dead Load Deflection
Bk. S. Abut.	6+96.52	24.50	599.06	599.06
℄ Brg. S. Abut.	6+98.37	24.50	599.14	599.14
A	7+08.37	24.50	599.54	599.64
B	7+18.37	24.50	599.92	600.10
C	7+28.37	24.50	600.26	600.49
D	7+38.37	24.50	600.56	600.80
E	7+48.37	24.50	600.83	601.05
F	7+58.37	24.50	601.06	601.23
G	7+68.37	24.50	601.25	601.35
H	7+78.37	24.50	601.41	601.44
℄ Brg. Pier 1	7+84.62	24.50	601.49	601.49
I	7+94.62	24.50	601.59	601.55
J	8+04.62	24.50	601.65	601.59
K	8+14.62	24.50	601.67	601.61
L	8+24.62	24.50	601.66	601.60
M	8+34.62	24.50	601.62	601.56
N	8+44.62	24.50	601.53	601.49
℄ Brg. Pier 2	8+57.21	24.50	601.38	601.38
O	8+67.21	24.50	601.21	601.27
P	8+77.21	24.50	601.01	601.14
Q	8+87.21	24.50	600.77	600.97
R	8+97.21	24.50	600.50	600.73
S	9+07.21	24.50	600.18	600.43
T	9+17.21	24.50	599.84	600.06
U	9+27.21	24.50	599.45	599.61
V	9+37.21	24.50	599.05	599.12
℄ Brg. N. Abut.	9+43.46	24.50	598.80	598.80
Bk. N. Abut.	9+45.31	24.50	598.73	598.73

BEAM 10

Location	Station	Offset	Theoretical Grade Elevations	Theoretical Grade Elevations Adjusted For Dead Load Deflection
Bk. S. Abut.	6+97.68	31.50	599.22	599.22
℄ Brg. S. Abut.	6+99.53	31.50	599.29	599.29
A	7+09.53	31.50	599.69	599.79
B	7+19.53	31.50	600.06	600.24
C	7+29.53	31.50	600.40	600.63
D	7+39.53	31.50	600.70	600.94
E	7+49.53	31.50	600.96	601.18
F	7+59.53	31.50	601.19	601.36
G	7+69.53	31.50	601.38	601.48
H	7+79.53	31.50	601.53	601.57
℄ Brg. Pier 1	7+85.78	31.50	601.61	601.61
I	7+95.78	31.50	601.70	601.67
J	8+05.78	31.50	601.76	601.70
K	8+15.78	31.50	601.78	601.72
L	8+25.78	31.50	601.76	601.70
M	8+35.78	31.50	601.71	601.65
N	8+45.78	31.50	601.63	601.58
℄ Brg. Pier 2	8+58.36	31.50	601.46	601.46
O	8+68.36	31.50	601.29	601.36
P	8+78.36	31.50	601.09	601.22
Q	8+88.36	31.50	600.85	601.04
R	8+98.36	31.50	600.57	600.80
S	9+08.36	31.50	600.25	600.50
T	9+18.36	31.50	599.90	600.12
U	9+28.36	31.50	599.51	599.67
V	9+38.36	31.50	599.11	599.18
℄ Brg. N. Abut.	9+44.61	31.50	598.86	598.86
Bk. N. Abut.	9+46.47	31.50	598.79	598.79

MODEL: Default
FILE NAME: P:\IDOT-IL11411-IDOT - Sacramento and Paulina over I-290\Work\CADD\Sacramento - Contract 62K65\CADD_Sheets\Structural\D162K65-016075-009-tos_elev_4.dgn
10/13/2025 4:33:29 PM

COLLINS ENGINEERS INC.

USER NAME =	DESIGNED - MPR	REVISED -
	CHECKED - EKM	REVISED -
PLOT SCALE =	DRAWN - KGZ	REVISED -
PLOT DATE =	CHECKED - EKM	REVISED -

STATE OF ILLINOIS
DEPARTMENT OF TRANSPORTATION

TOP OF SLAB ELEVATIONS IV
STRUCTURE NO. 016-0754
SHEET S-9 OF S-37 SHEETS

F.A.I. RTE.	SECTION	COUNTY	TOTAL SHEETS	SHEET NO.
290	2019-192-B-R	COOK	237	150
		CONTRACT NO. 62K65		
	ILLINOIS	FED. AID PROJECT NHPP-EW4T(947)		

WEST EDGE OF SLAB

Location	Station	Offset	Theoretical Grade Elevations
S. End of S. Approach Slab	6+57.72	-34.75	597.66
A	6+67.72	-34.75	598.06
B	6+77.72	-34.75	598.46
N. End of S. Approach Slab	6+87.72	-34.75	598.87

WEST EDGE OF PAVEMENT

Location	Station	Offset	Theoretical Grade Elevations
S. End of S. Approach Slab	6+59.50	-24.00	597.57
A	6+69.50	-24.00	597.97
B	6+79.50	-24.00	598.37
N. End of S. Approach Slab	6+89.50	-24.00	598.78

℄ SACRAMENTO BLVD., CROWN, & PGL

Location	Station	Offset	Theoretical Grade Elevations
S. End of S. Approach Slab	6+63.47	0.00	598.09
A	6+73.47	0.00	598.49
B	6+83.47	0.00	598.89
N. End of S. Approach Slab	6+93.47	0.00	599.29

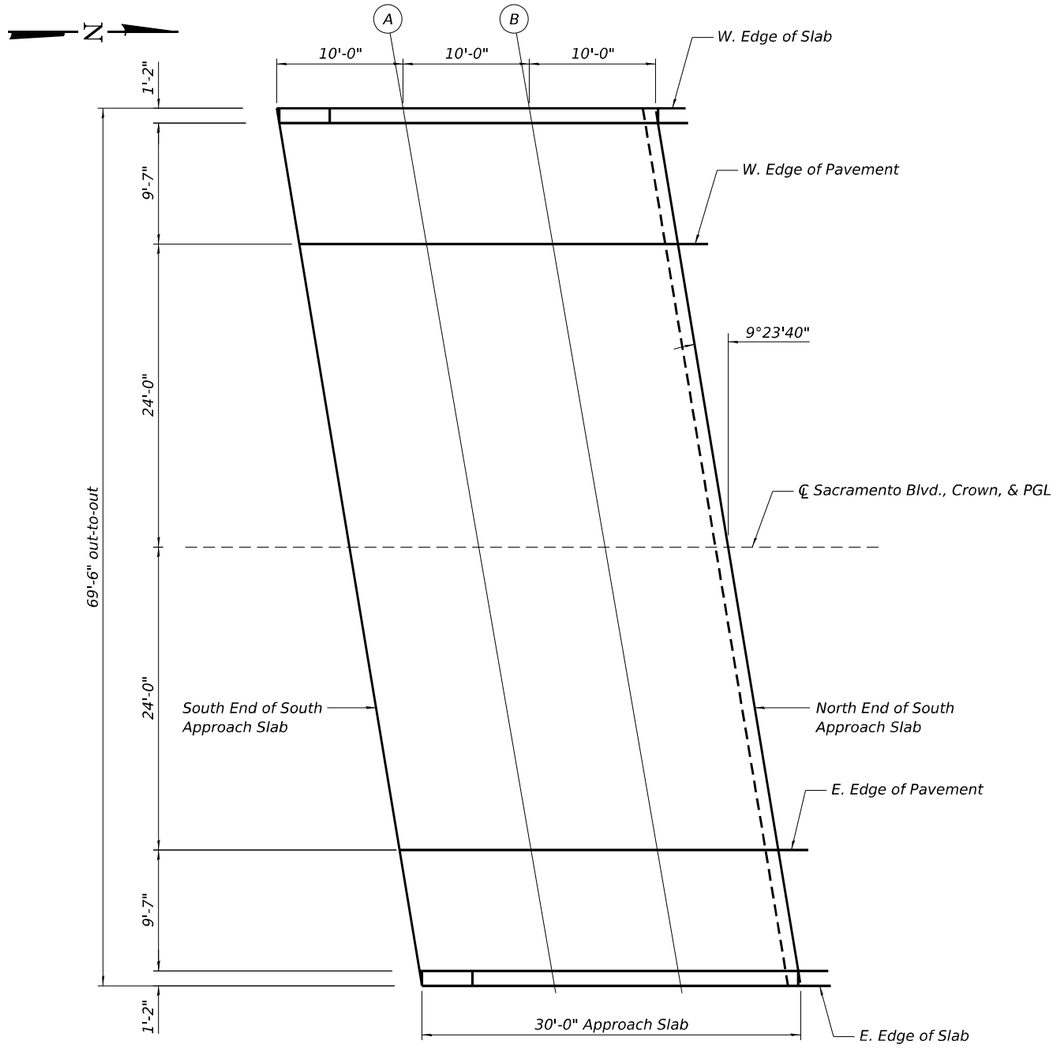

PLAN

*Edge of Pavement & Edge of Slab elevations taken at top of slab deck/bottom of sidewalk

EAST EDGE OF PAVEMENT

Location	Station	Offset	Theoretical Grade Elevations
S. End of S. Approach Slab	6+67.44	24.00	597.89
A	6+77.44	24.00	598.29
B	6+87.44	24.00	598.69
N. End of S. Approach Slab	6+97.44	24.00	599.09

EAST EDGE OF SLAB

Location	Station	Offset	Theoretical Grade Elevations
S. End of S. Approach Slab	6+69.22	34.75	598.12
A	6+79.22	34.75	598.52
B	6+89.22	34.75	598.93
N. End of S. Approach Slab	6+99.22	34.75	599.33

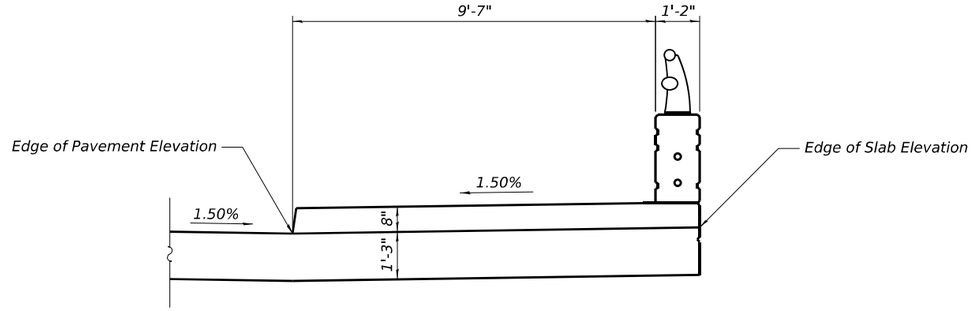

TOP OF APPROACH SLAB ELEVATIONS UNDER SIDEWALK

MODEL: Default
FILE NAME: P:\10-IL\14411-IDOT - Sacramento and Paulina over I-290\Work\CADD\Sacramento - Contract 62K65\CADD_Sheets\Structural\D162K65-0160754-010-s_app_tos_elev.dgn
10/13/2025 4:33:31 PM

COLLINS ENGINEERS INC.

USER NAME =	DESIGNED - MPR	REVISED -	
	CHECKED - EKM	REVISED -	
PLOT SCALE =	DRAWN - KGZ	REVISED -	
PLOT DATE =	CHECKED - EKM	REVISED -	

STATE OF ILLINOIS
DEPARTMENT OF TRANSPORTATION

TOP OF SOUTH APPROACH SLAB ELEVATIONS
STRUCTURE NO. 016-0754

SHEET S-10 OF S-37 SHEETS

F.A.I. RTE.	SECTION	COUNTY	TOTAL SHEETS	SHEET NO.
290	2019-192-B-R	COOK	237	151
		CONTRACT NO. 62K65		
		ILLINOIS	FED. AID PROJECT NHPP-EW4T(947)	

WEST EDGE OF SLAB

Location	Station	Offset	Theoretical Grade Elevations
S. End of N. Approach Slab	9+34.49	-34.75	599.32
C	9+44.49	-34.75	598.92
D	9+54.49	-34.75	598.52
N. End of N. Approach Slab	9+64.49	-34.75	598.12

WEST EDGE OF PAVEMENT

Location	Station	Offset	Theoretical Grade Elevations
S. End of N. Approach Slab	9+36.27	-24.00	599.08
C	9+46.27	-24.00	598.68
D	9+56.27	-24.00	598.29
N. End of N. Approach Slab	9+66.27	-24.00	597.89

℄ SACRAMENTO BLVD., CROWN, & PGL

Location	Station	Offset	Theoretical Grade Elevations
S. End of N. Approach Slab	9+40.24	0.00	599.28
C	9+50.24	0.00	598.89
D	9+60.24	0.00	598.49
N. End of N. Approach Slab	9+70.24	0.00	598.09

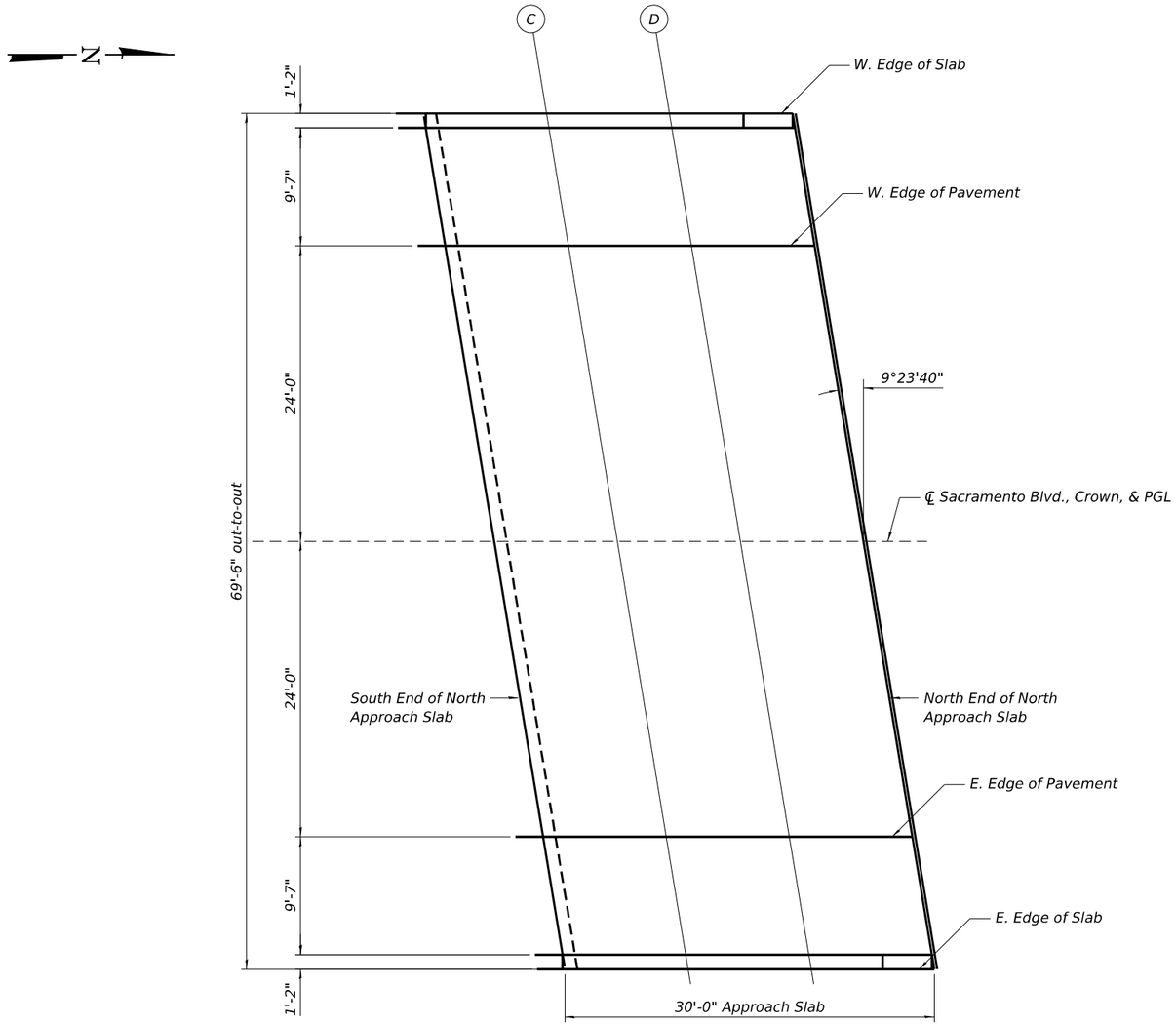

PLAN

*Edge of Pavement & Edge of Slab elevations taken at top of slab deck/bottom of sidewalk

EAST EDGE OF PAVEMENT

Location	Station	Offset	Theoretical Grade Elevations
S. End of N. Approach Slab	9+44.21	24.00	598.77
C	9+54.21	24.00	598.37
D	9+64.21	24.00	597.97
N. End of N. Approach Slab	9+74.21	24.00	597.57

EAST EDGE OF SLAB

Location	Station	Offset	Theoretical Grade Elevations
S. End of N. Approach Slab	9+45.99	34.75	598.86
C	9+55.99	34.75	598.46
D	9+65.99	34.75	598.06
N. End of N. Approach Slab	9+75.99	34.75	597.66

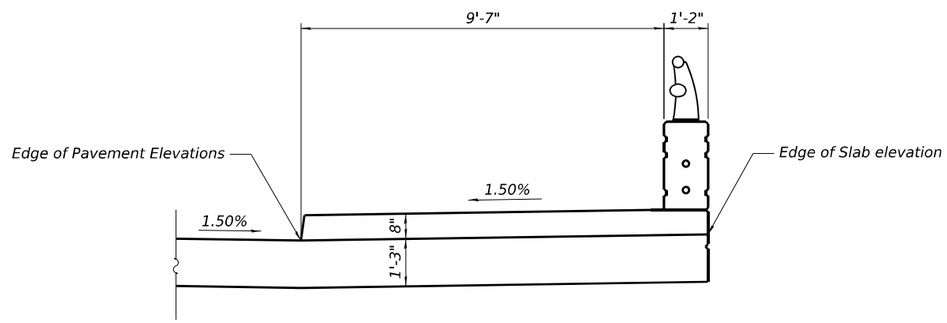

TOP OF APPROACH SLAB ELEVATIONS UNDER SIDEWALK

MODEL: Default
FILE NAME: P:\IDOL\14411-IDOT - Sacramento and Paulina over I-290\Work\CADD\Sacramento - Contract 62K65\CADD_Sheets\Structural\D162K65-0160754-011-n_app_cos_elev.dgn
10/13/2025 4:33:33 PM

COLLINS ENGINEERS INC.

USER NAME =	DESIGNED - MPR	REVISED -
	CHECKED - EKM	REVISED -
PLOT SCALE =	DRAWN - KGZ	REVISED -
PLOT DATE =	CHECKED - EKM	REVISED -

STATE OF ILLINOIS
DEPARTMENT OF TRANSPORTATION

TOP OF NORTH APPROACH SLAB ELEVATIONS
STRUCTURE NO. 016-0754
SHEET S-11 OF S-37 SHEETS

F.A.I. RTE.	SECTION	COUNTY	TOTAL SHEETS	SHEET NO.
290	2019-192-B-R	COOK	237	152
		CONTRACT NO. 62K65		
	ILLINOIS	FED. AID PROJECT NHPP-EW4T(947)		

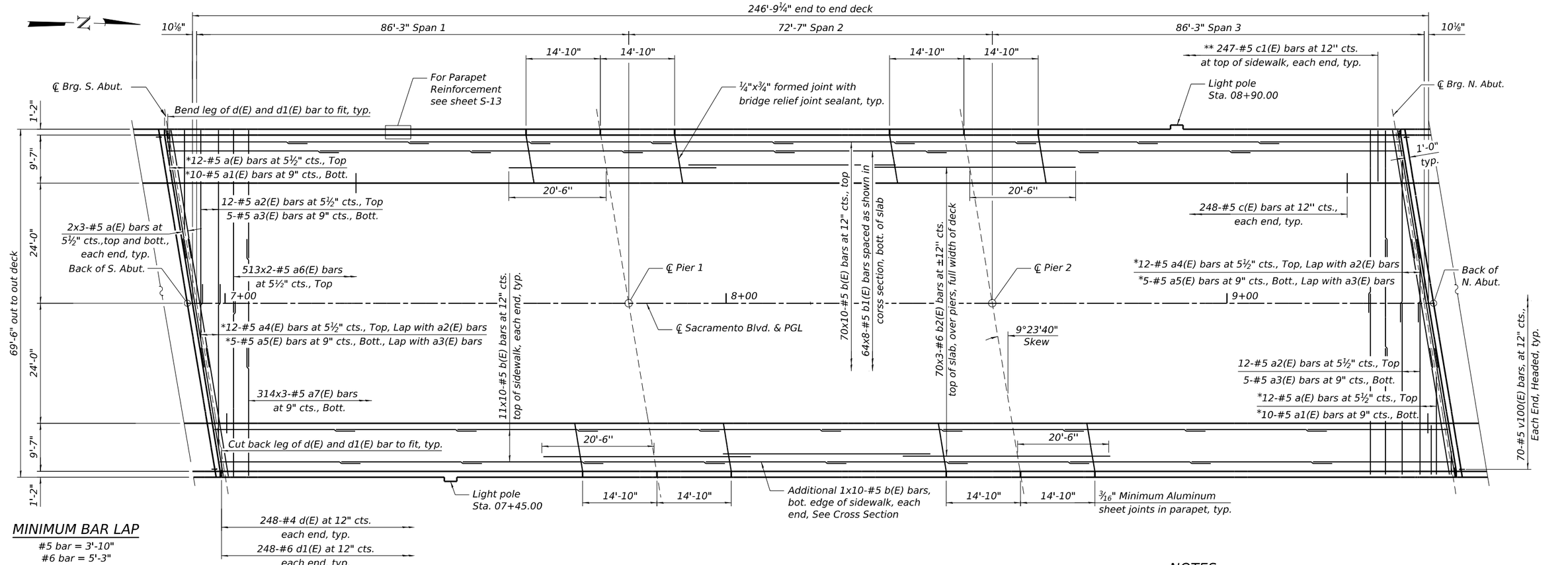

MINIMUM BAR LAP

#5 bar = 3'-10"
#6 bar = 5'-3"

* See Field Cutting Diagram on Sheet S-14.

** Trim bars to fit.

PLAN

NOTES:

1. Bars indicated thus 7x3-#5 etc. indicates 7 lines of bars with 3 bars per line.
2. See Sheet S-14 for Superstructure Details and Bill of Material.
3. For optional deck pouring sequence, See Sheet S-14.

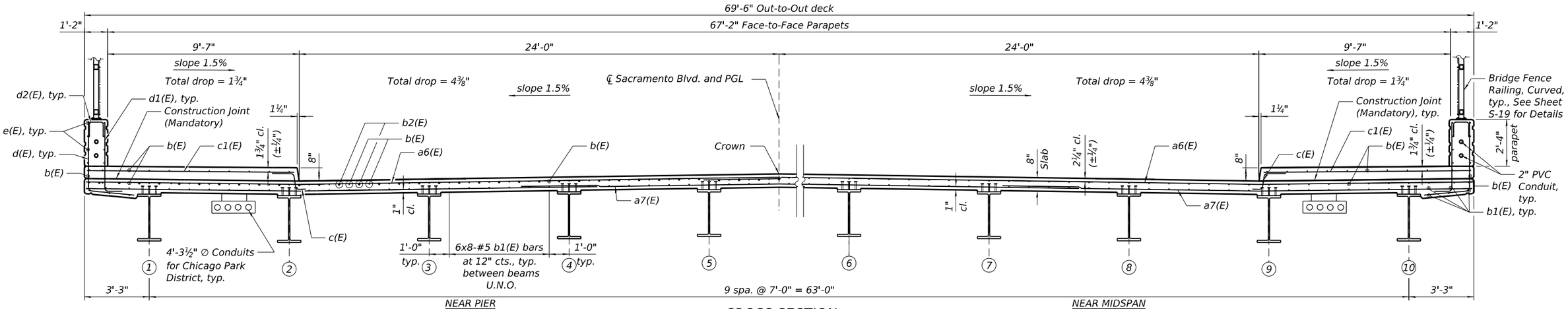

NEAR PIER
NEAR MIDSPAN (SPAN 2)

NEAR MIDSPAN
(SPANS 1 & 3)

CROSS SECTION

(Looking North)

Accurate GROUP, INC.	USER NAME =	DESIGNED - ME	REVISED -	STATE OF ILLINOIS DEPARTMENT OF TRANSPORTATION	SUPERSTRUCTURE STRUCTURE NO. 016-0754
		CHECKED - JL	REVISED -		
	PLOT SCALE =	DRAWN - ME	REVISED -		
	PLOT DATE =	CHECKED - JL	REVISED -		SHEET S-12 OF S-37 SHEETS

F.A.U. RTE.	SECTION	COUNTY	TOTAL SHEETS	SHEET NO.
2856	2019-191-B-R	COOK	237	153
		CONTRACT NO. 62K64		
	ILLINOIS FED. AID PROJECT			

MODEL: Default
FILE NAME: c:\Engineering\LiveProjects\23003_IDOT P & S Strs_Collins\CADD\CADD Sheets\Structural\D162K65-0160754-Sacramento\D162K65-0160754-012-Accurate scope superstructure.dgn

10/13/2025 7:43:33 PM

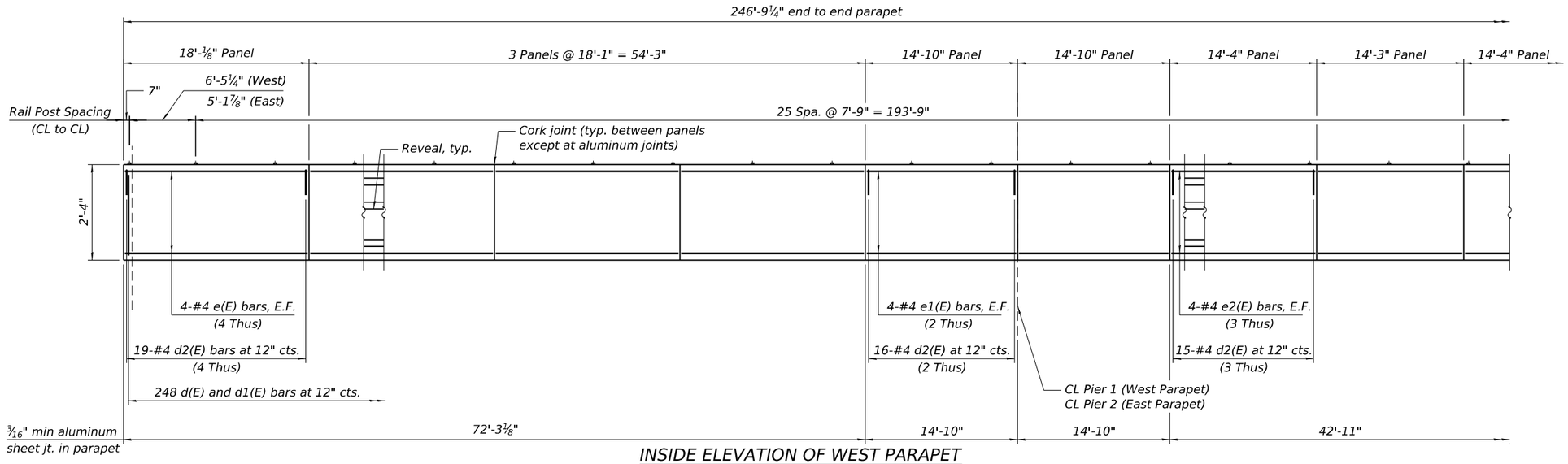

INSIDE ELEVATION OF WEST PARAPET

(East parapet similar U.N.O.)

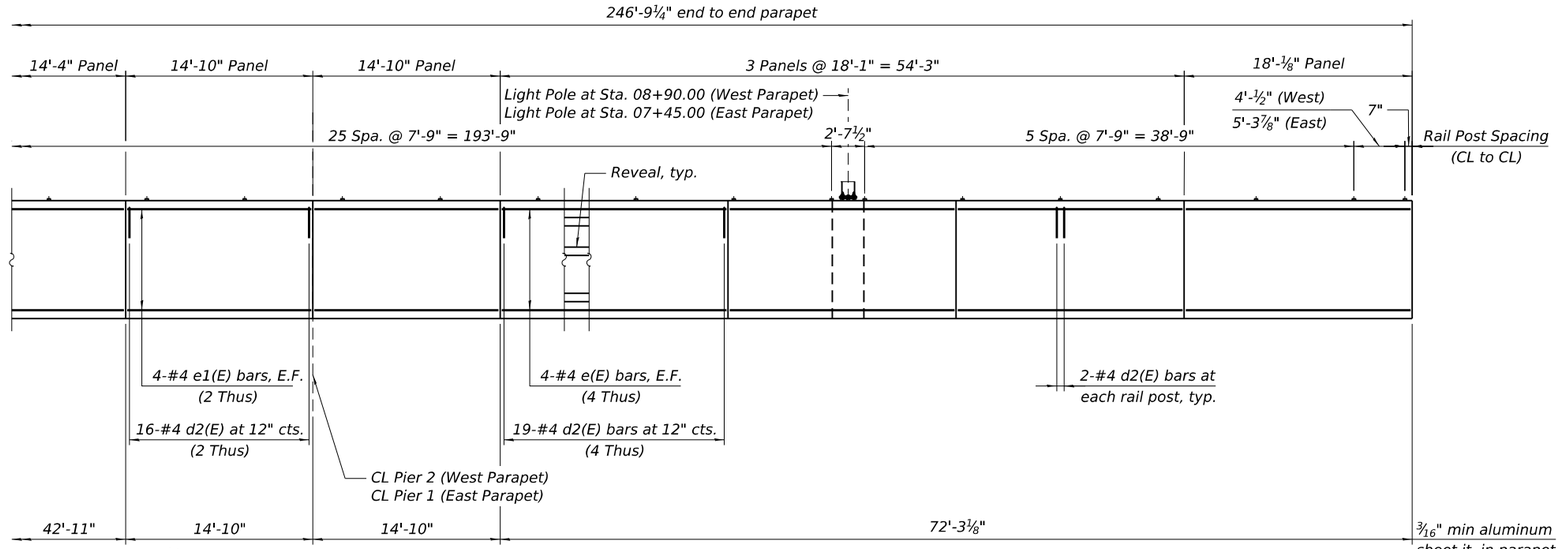

INSIDE ELEVATION OF WEST PARAPET

(East parapet similar U.N.O.)

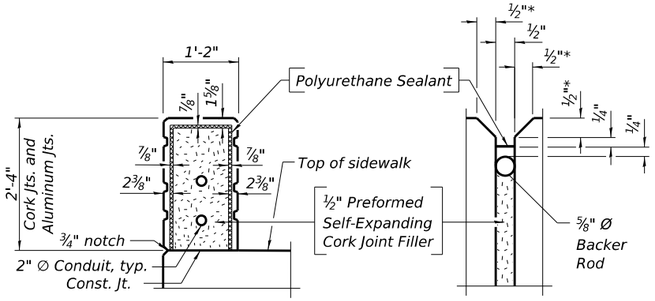

PARAPET JOINT DETAILS

* ½" for top and reveal, 1¼" elsewhere

MINIMUM BAR LAP

#4 Bar=2'-7''
#5 Bar=3'-10''

NOTES:

1. Stations Shown Measured From CL of Sacramento St.
2. All edges shall be chamfered ¾".
3. The reveal on the parapet will not be paid for separately and shall be included in the cost of "Concrete Superstructure".
4. The Polyurethane Sealant shall be according to Article 1050.04 of the Std. Spec. and the color shall be gray.
5. The 3/16" min. aluminum sheet shall be ASTM B 209 alloy 3003-H14 and coated with 5 mils of either bitumen paint or epoxy paint to minimize reaction with wet concrete. Cost included with Concrete Superstructure.
6. See Section Thru Parapet and Sidewalk on Sheet S-14
7. See Reveal Pattern on Sheet S-16

MODEL: Default
FILE NAME: Q:\Engineering\LiveProjects\23003_IDOT P & S Strs_Collins\CADD\CADD Sheets\Structural\D162K64-0160754-Sacramento\D162K65-0160754-013-Accurate scope parapet.dgn

10/13/2025 7:34:47 PM

Accurate GROUP, INC.

USER NAME =		DESIGNED - ME	REVISED -		
		CHECKED - JL	REVISED -		
PLOT SCALE =		DRAWN - ME	REVISED -		
PLOT DATE =		CHECKED - JL	REVISED -		

STATE OF ILLINOIS
DEPARTMENT OF TRANSPORTATION

SUPERSTRUCTURE DETAILS I
STRUCTURE NO. 016-0754
SHEET S-13 OF S-37 SHEETS

F.A.U. RTE.	SECTION	COUNTY	TOTAL SHEETS	SHEET NO.
2856	2019-191-B-R	COOK	237	154
		CONTRACT NO. 62K64		
	ILLINOIS	FED. AID PROJECT		

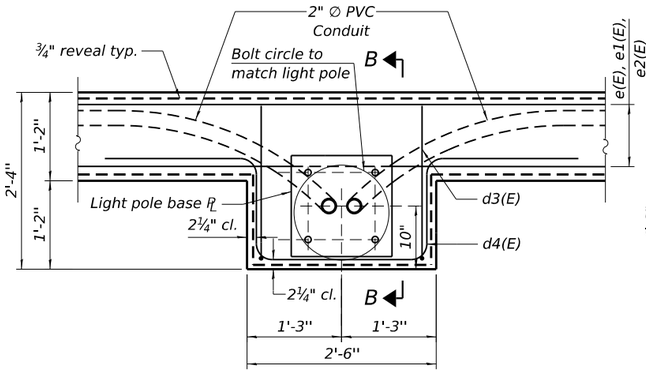

PLAN

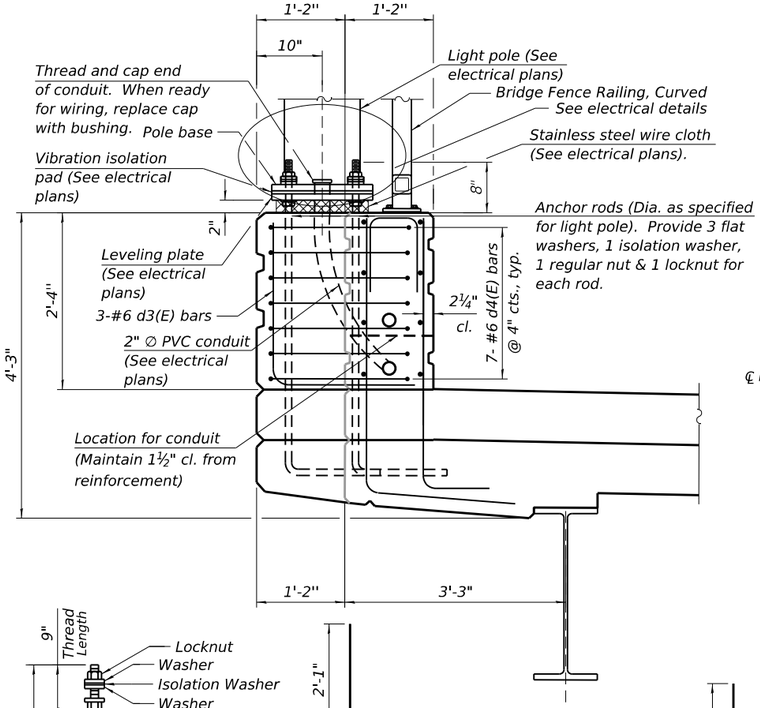

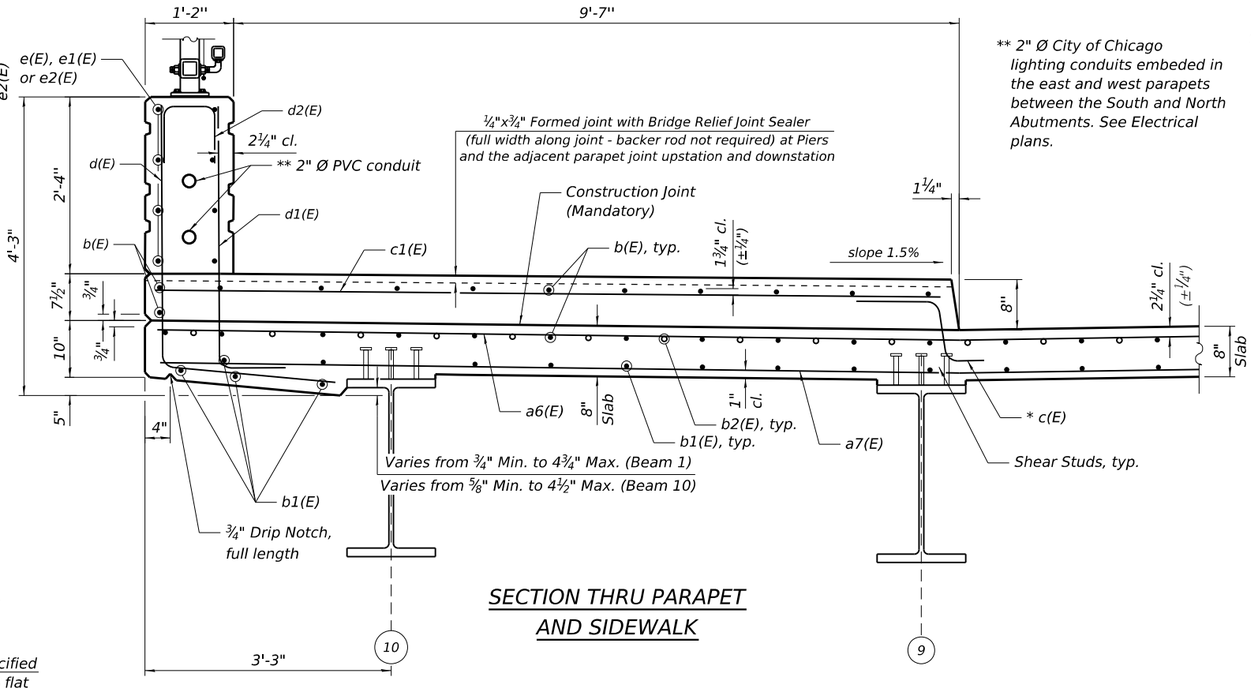

SECTION THRU PARAPET AND SIDEWALK

** 2" Ø City of Chicago lighting conduits embeded in the east and west parapets between the South and North Abutments. See Electrical plans.

SUPERSTRUCTURE BILL OF MATERIAL

Bar	No.	Size	Length	Shape
a(E)	12	#5	36'-1"	
a1(E)	10	#5	46'-5"	
a2(E)	24	#5	34'-7"	
a3(E)	10	#5	40'-0"	
a4(E)	12	#5	43'-1"	
a5(E)	5	#5	44'-1"	
a6(E)	1026	#5	36'-6"	
a7(E)	942	#5	25'-8"	
b(E)	940	#5	28'-1"	
b1(E)	512	#5	34'-2"	
b2(E)	210	#6	41'-5"	
c(E)	496	#5	2'-4"	
c1(E)	496	#5	10'-5"	
d(E)	496	#4	5'-11"	
d1(E)	496	#6	4'-6"	
d2(E)	658	#4	2'-4"	
d3(E)	6	#6	4'-0"	
d4(E)	14	#6	8'-7"	
e(E)	128	#4	17'-8"	
e1(E)	64	#4	14'-6"	
e2(E)	48	#4	13'-11"	
m10(E)	18	#6	26'-8"	
m11(E)	36	#6	6'-1"	
m12(E)	8	#6	3'-1"	
s10(E)	142	#5	8'-2"	
s11(E)	142	#5	8'-4"	
v100(E)	140	#5	3'-3"	

Concrete Superstructure	Cu Yd	750.0
Protective Coat	Sq Yd	2,071
Reinforcement Bars, Epoxy Coated	Pound	145,850
Bridge Deck Grooving	Sq Yd	1,317

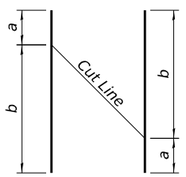

	Size	a	b	No.
a(E)	#5	2'-10"	33'-3"	12
a1(E)	#5	2'-10"	43'-7"	10
a4(E)	#5	6'-4"	36'-9"	12
a5(E)	#5	13'-0"	31'-1"	5

FIELD CUTTING DIAGRAM

Order bars full length. Cut as shown and use remainder of bars in opposite end of deck.

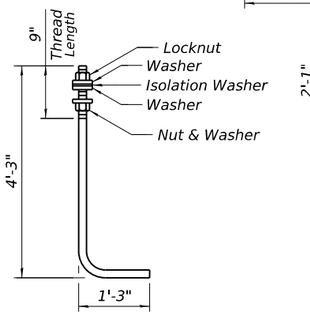

ANCHOR ROD

Diameter as specified for light poles. (ASTM F 1554 Grade 105) Full length hot dipped galvanized. Cost of anchor rods is included with Concrete Superstructure.

BAR d3(E)

SECTION B-B

Reinforcement in slab not shown for clarity

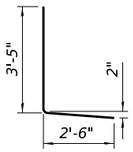

BAR d(E)

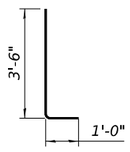

BAR d1(E)

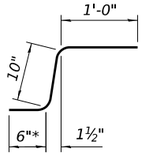

BAR c(E)

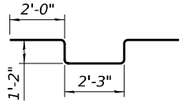

BAR d4(E)

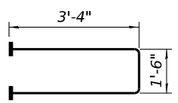

BAR s10(E)

(Headed - 284 #5 terminators)

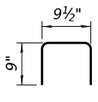

BAR d2(E)

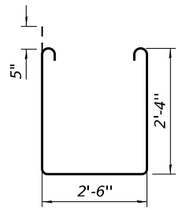

BAR s11(E)

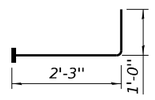

BAR v100(E)

(Headed - 140 #5 terminators)

OPTIONAL DECK POURING SEQUENCE

Optional transverse construction joint shown in Span 1 assuming deck pour starts at the S. End of Deck. If Contractor elects to start the pour at the N. Abut., the optional transverse construction joint shall be 72'-2" from N. End of Deck.

NOTES:

1. *When the deck pour is stopped for the day at one or more of the transverse bonded construction joints in the deck pouring sequence as shown, the next pour shall not be made until both of the following are met:*
   - *i. At least 72 hours shall have elapsed from the end of the previous pour.*
   - *ii. The concrete strength shall have attained a minimum flexural strength of 675 psi or a minimum compressive strength of 4000 psi.*
2. *Bar terminators, paid for separately. See Total Bill of Material.*
3. *Bars indicated thus 1 x 2-#4 etc. indicates 1 line of bars with 2 bars per line.*
4. *See Sheet S-16 for Concrete Parapet reveal details.*

** In lieu of bottom leg, c(E) bars may be drilled and set according to Articles 509.06 and 584 of the Standard Specifications. Drilled holes shall be roughened or scored per manufacturer's recommendations. Maximum depth of drilled hole shall not exceed 6".*

MODEL: Default
FILE NAME: Q:\Engineering\LiveProjects\23003_IDOT P & S Strs_Collins\CADD\CADD Sheets\Structural\D162K64-0160754-Sacramento\D162K65-0160754-014-Accurate scope superstructure_details.dgn
10/13/2025 7:35:31 PM

Accurate GROUP, INC.

USER NAME =	DESIGNED - ME	REVISED -	
	CHECKED - JL	REVISED -	
PLOT SCALE =	DRAWN - ME	REVISED -	
PLOT DATE =	CHECKED - JL	REVISED -	

STATE OF ILLINOIS
DEPARTMENT OF TRANSPORTATION

SUPERSTRUCTURE DETAILS II
STRUCTURE NO. 016-0754
SHEET S-14 OF S-37 SHEETS

F.A.U. RTE.	SECTION	COUNTY	TOTAL SHEETS	SHEET NO.
2856	2019-191-B-R	COOK	237	155
		CONTRACT NO. 62K64		
		ILLINOIS	FED. AID PROJECT	

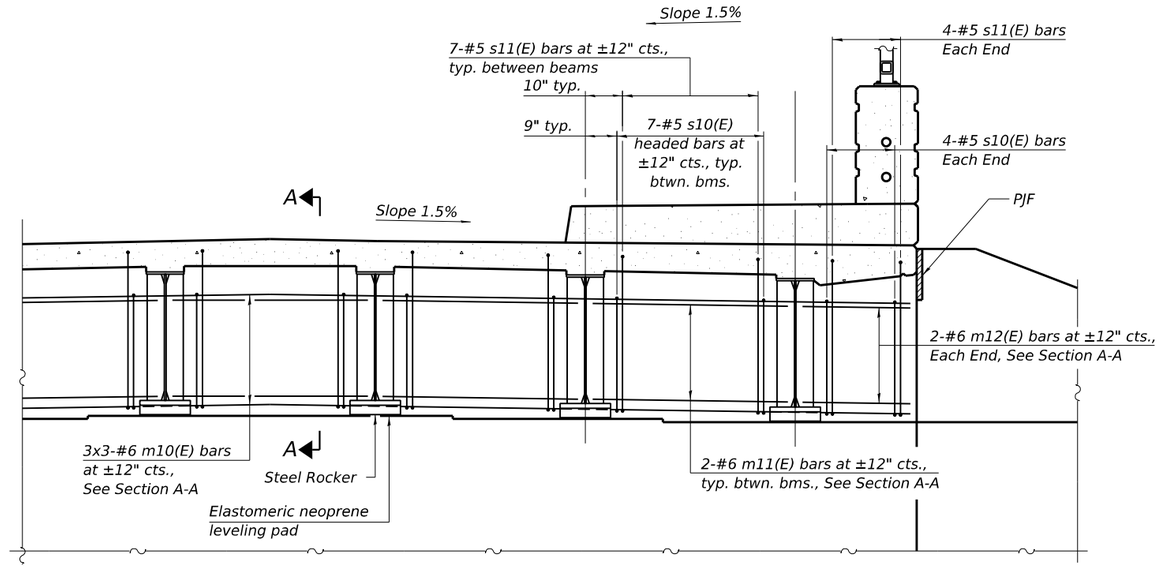

MINIMUM BAR LAP

#6 Bar = 5'-3"

DIAPHRAGM AT ABUTMENT

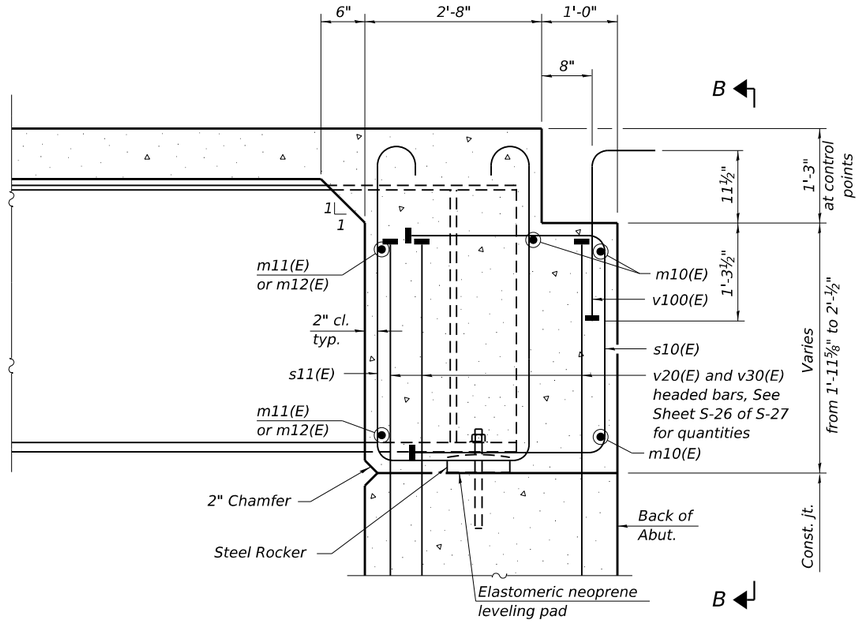

SECTION A-A

(at Rt. ∠'s)
(See Pge S-29 for v(E) bars)

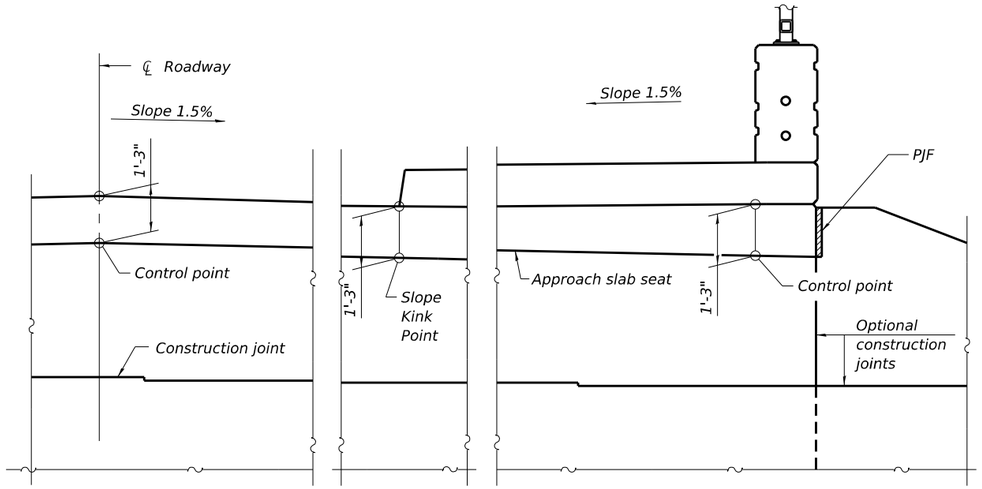

VIEW B-B

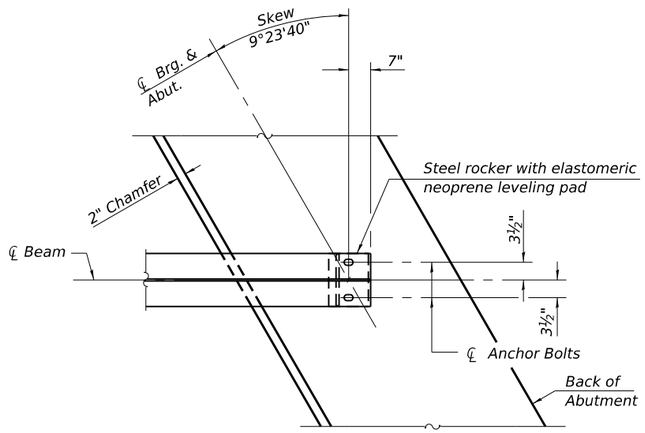

PLAN AT ABUTMENT

(Showing bottom flange of beam)

NOTES

1. See Sheet S-14 for superstructure details and Bill of Material.
2. The s10(E) and s11(E) bars shall be placed parallel to the beams. Spacing for these bars shall be at right angles to beams.
3. The approach slab seat shall have a constant slope determined from the control points shown.
4. See Sheet S-17 for PFJ details.

DIA-SB-R 4-4-2025

Accurate GROUP, INC.

USER NAME =	DESIGNED - ME	REVISED -	
	CHECKED - JL	REVISED -	
PLOT SCALE =	DRAWN - ME	REVISED -	
PLOT DATE =	CHECKED - JL	REVISED -	

STATE OF ILLINOIS
DEPARTMENT OF TRANSPORTATION

CONCRETE DIAPHRAGM DETAILS
STRUCTURE NO. 016-0754
SHEET S-15 OF S-37 SHEETS

F.A.U. RTE.	SECTION	COUNTY	TOTAL SHEETS	SHEET NO.
2856	2019-191-B-R	COOK	237	156
		CONTRACT NO. 62K64		
		ILLINOIS	FED. AID PROJECT	

MODEL: Default
FILE NAME: Q:\Engineering\LiveProjects\23003_IDOT P & S Strs_Collins\CADD\CADD Sheets\Structural\D162K64-0160754-Sacramento\D162K65-0160754-015-Accurate scope diaphragm_details.dgn
10/13/2025 7:35:54 PM

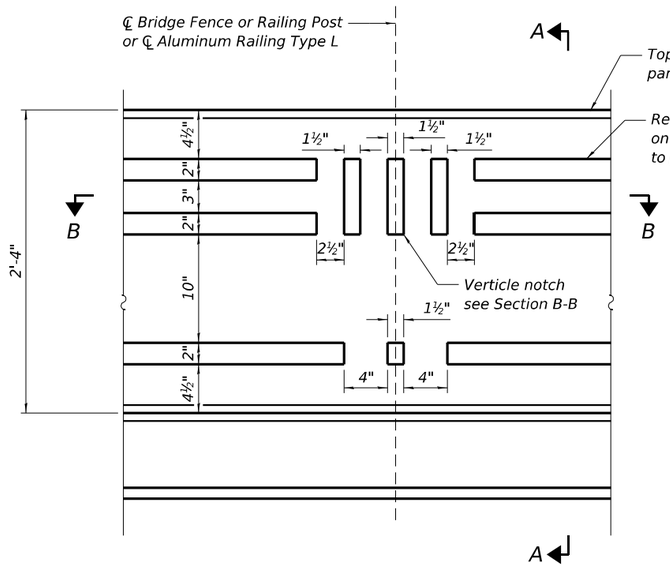

ELEVATION

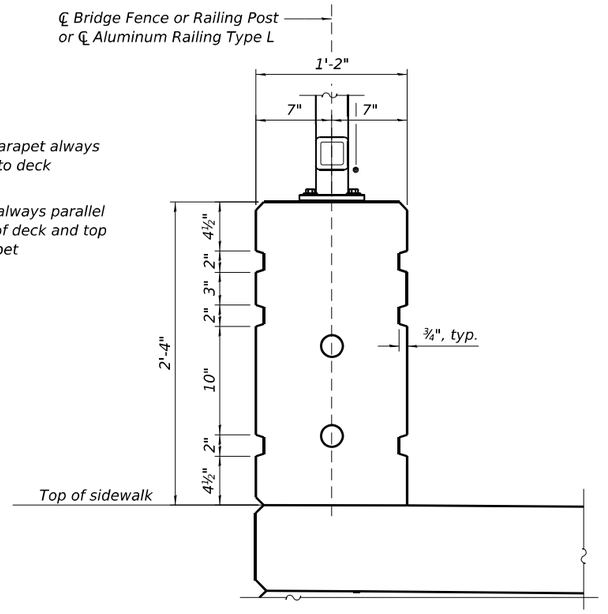

SECTION A-A

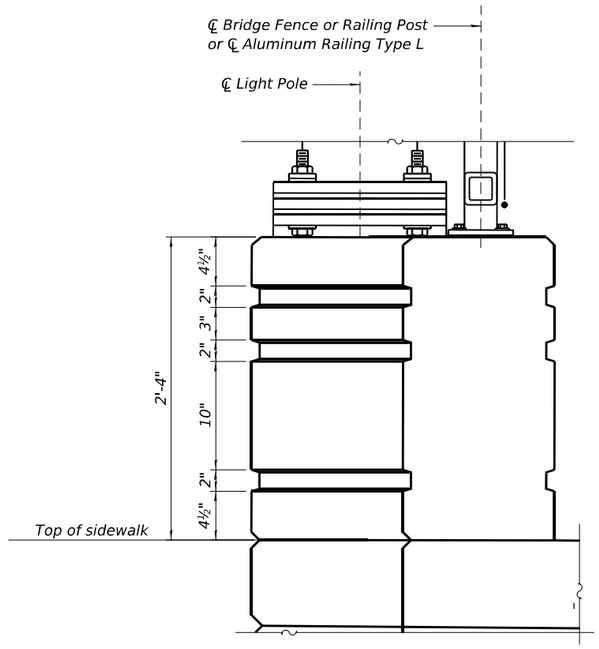

SECTION AT LIGHT POLE

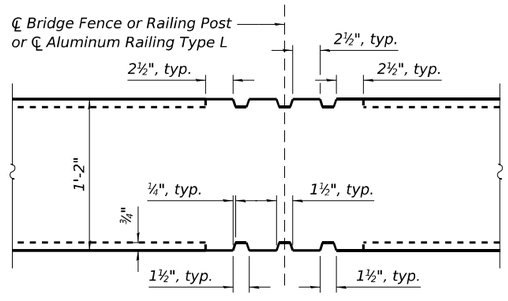

SECTION B-B

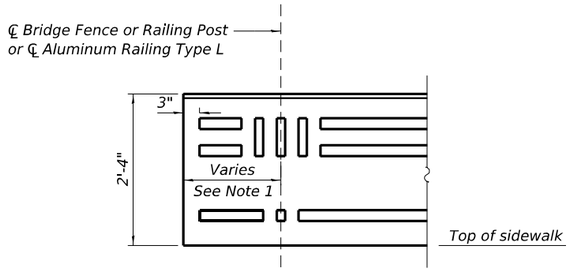

RAIL DETAIL 1 - AT END OF PARAPET

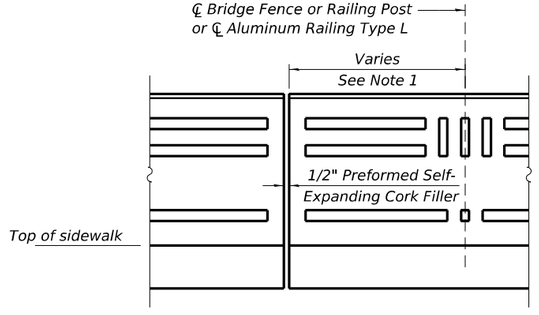

RAIL DETAIL 2 - AT PARAPET JOINT

Notes:

1. The middle 2½" x 1½" rustification shall be aligned with the center of the Bridge Fence Railing posts.
2. The reveal on the Parapet shall be included in the cost of the pay item, "Concrete Superstructure." Shop drawings of parapet with reveals shall be submitted including layout of the Parapet pattern, Bridge Fence Railing Curved, and Aluminum Railing, Type L posts, and light poles.
3. For Bridge Fence Railing Curved, and Aluminum Railing, Type L locations and spacing, see Sheet S-12 thru S-18

MODEL: Default
FILE NAME: P:\10-IL\11411-IDOT - Sacramento and Paulina over I-290\Work\CADD\Sacramento - Contract 62K65\CADD_Sheets\Structural\D162K65-016754-016-decorative railing details.dgn
10/13/2025 4:33:40 PM

COLLINS ENGINEERS INC.

USER NAME =	DESIGNED - MPR	REVISED -
	CHECKED - EKM	REVISED -
PLOT SCALE =	DRAWN - KGZ	REVISED -
PLOT DATE =	CHECKED - EKM	REVISED -

STATE OF ILLINOIS
DEPARTMENT OF TRANSPORTATION

PARAPET REVEAL DETAILS
STRUCTURE NO. 016-0754
SHEET S-16 OF S-37 SHEETS

F.A.I. RTE.	SECTION	COUNTY	TOTAL SHEETS	SHEET NO.
290	2019-192-B-R	COOK	237	157
		CONTRACT NO. 62K65		
	ILLINOIS	FED. AID PROJECT NHPP-EW4T(947)		

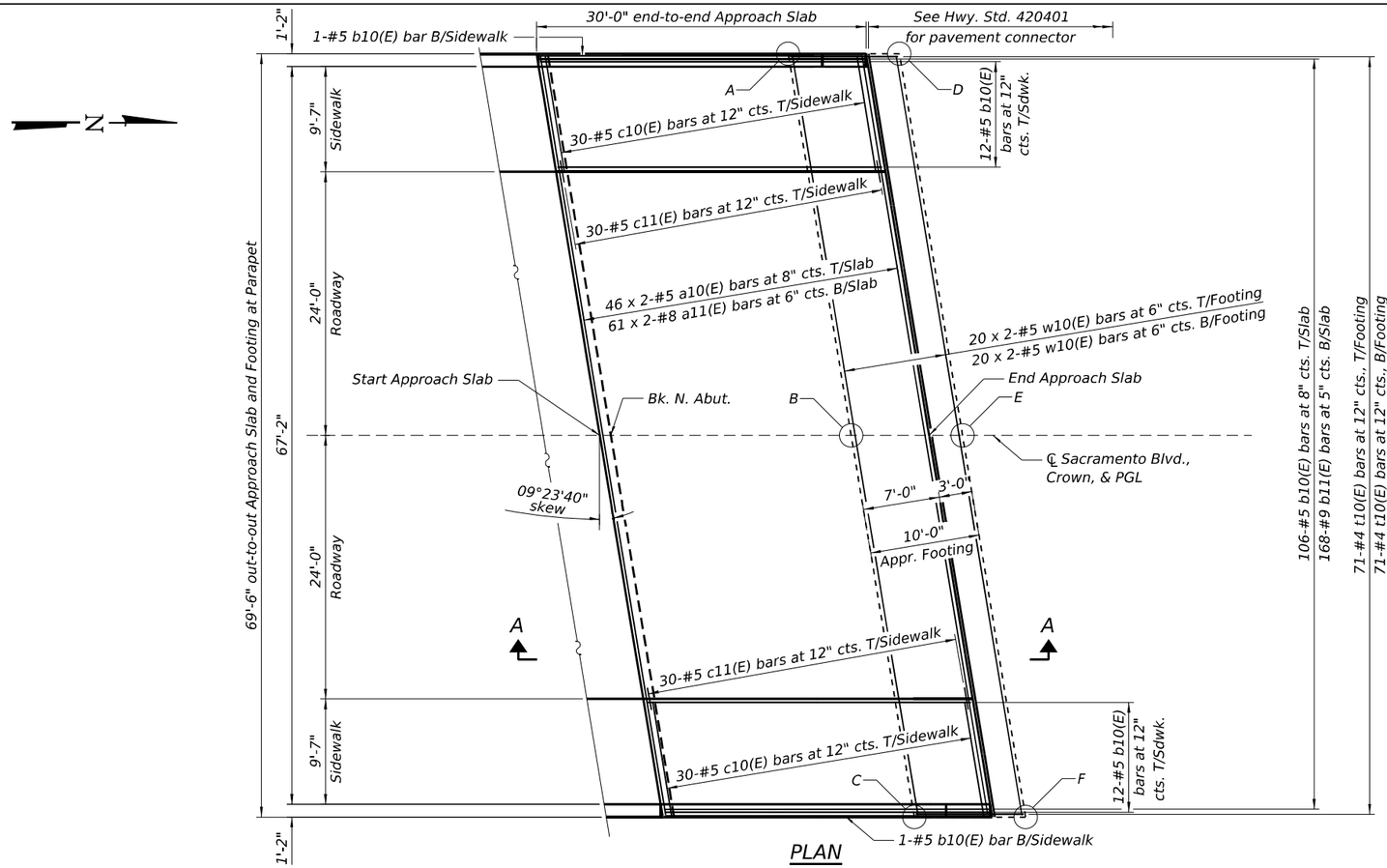

PLAN

(North approach slab shown; South approach slab similar by 180° rotation)

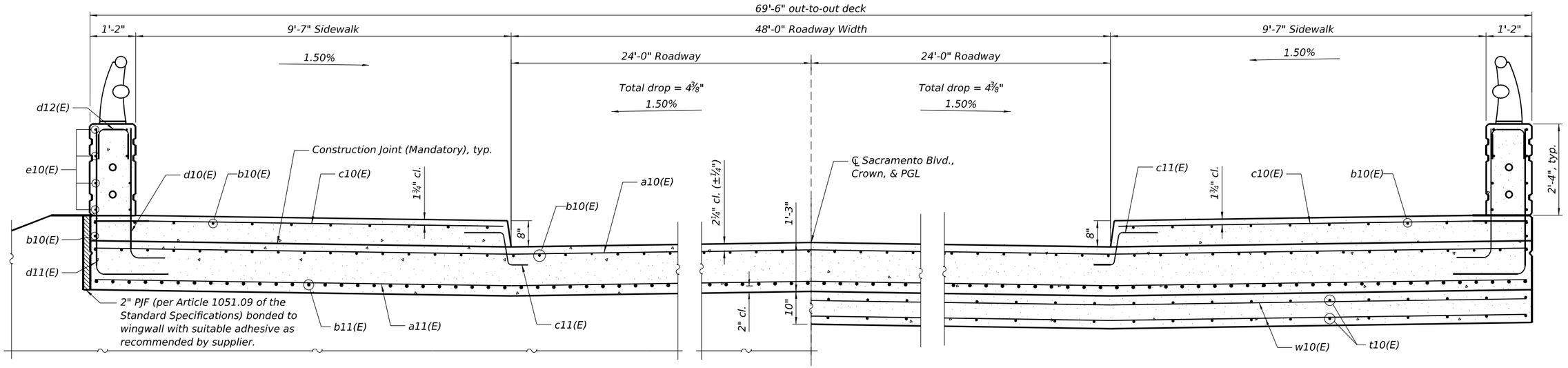

NEAR ABUTMENT

CROSS SECTION
(Looking North)

AT APPROACH FOOTING

START AND END STATIONS FOR APPROACH SLAB

South Approach		North Approach	
Start Station	6+93.47	Start Station	9+40.24
End Station	6+63.47	End Station	9+70.24

TOP AND BOTTOM ELEVATIONS FOR APPROACH FOOTING

South Approach				North Approach			
Point/ Location	Station	Top	Bottom	Point/ Location	Station	Top	Bottom
A - NW	6+64.82	596.70	595.86	A - SW	6+67.53	596.75	595.91
B - N PGL	6+70.57	597.13	596.29	B - S PGL	9+73.28	596.72	595.88
C - NE	6+76.32	596.29	595.45	C - SE	9+79.03	596.29	295.45
D - SW	6+54.68	597.15	596.32	D - NW	9+57.40	597.15	596.32
E - S PGL	6+60.43	596.72	595.89	E - N PGL	9+63.15	597.12	596.29
F - SE	6+66.18	596.69	595.86	F - NE	9+68.90	596.69	595.86

Notes:
1. Bars indicated thus 20 x 2-#5 etc., indicates 20 line of bars with 2 lengths per line.

MINIMUM BAR LAP

#5 bar = 3'-0"
#8 bar = 6'-11"

(Sheet 1 of 2)

MODEL: Default
FILE NAME: P:\10dli\14411-IDOT - Sacramento and Paulina over I-290\Work\CADDSacramento - Contract 62K65\CADD_Sheets\Structural\D162K65-0166754-017-approach_slab_1.dgn
10/13/2025 4:33:43 PM

COLLINS ENGINEERS INC.

USER NAME =	DESIGNED - MPR	REVISED -
	CHECKED - EKM	REVISED -
PLOT SCALE =	DRAWN - KGZ	REVISED -
PLOT DATE =	CHECKED - EKM	REVISED -

STATE OF ILLINOIS
DEPARTMENT OF TRANSPORTATION

BRIDGE APPROACH SLAB DETAILS
STRUCTURE NO. 016-0754
SHEET S-17 OF S-37 SHEETS

F.A.I. RTE.	SECTION	COUNTY	TOTAL SHEETS	SHEET NO.
290	2019-192-B-R	COOK	237	158
		CONTRACT NO. 62K65		
	ILLINOIS	FED. AID PROJECT NHPP-EW4T(947)		

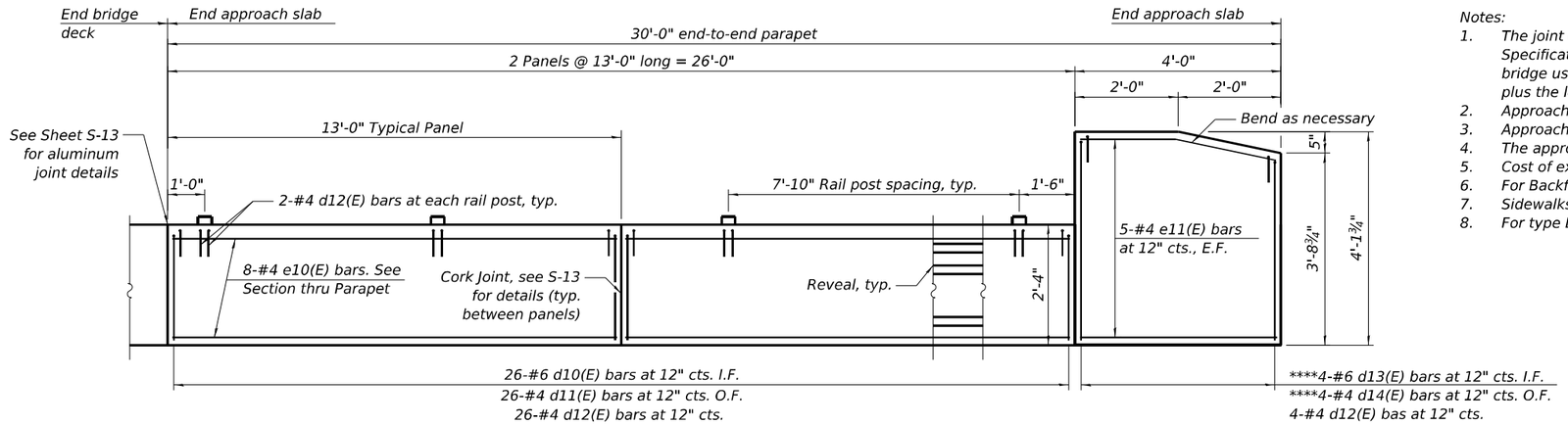

INSIDE ELEVATION OF PARAPET

**** Trim bars in field as necessary

Notes:

1. *The joint opening shall be adjusted for temperature per Article 520.04 of the Standard Specifications. However, since this detail is for jointless structures, the length of bridge used to calculate the adjustment shall be equal to half the total bridge length plus the length of the bridge approach slab.*
2. *Approach slab shall be paid for as Concrete Superstructure (Approach Slab).*
3. *Approach footing concrete shall be paid for as Concrete Structures.*
4. *The approach footing maximum applied service bearing pressure (Qmax) = 2.0 ksf.*
5. *Cost of excavation for approach footing included with Concrete Structures.*
6. *For Backfill and drainage treatment details, see Abutment Sheet S-29.*
7. *Sidewalks and parapet concrete shall be paid for as Concrete Superstructure.*
8. *For type L railing details, see Sheet S-21.*

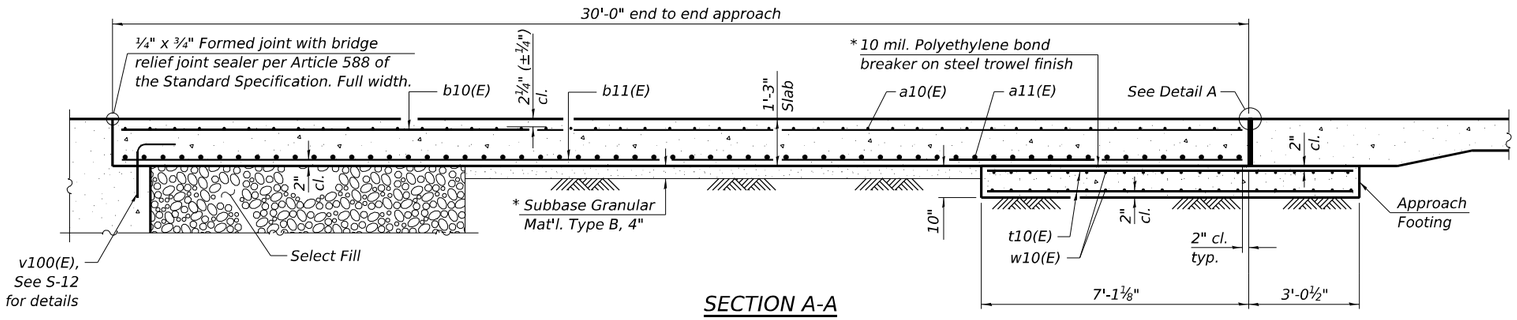

SECTION A-A

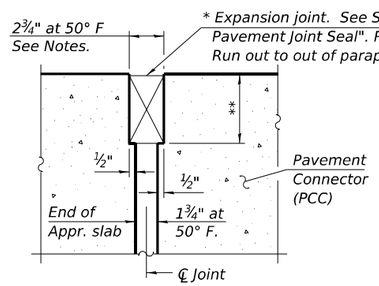

DETAIL A

(at Rt. ∠'s)

* Cost included with Concrete Superstructure (Approach Slab).

** Per manufacturer recommendations

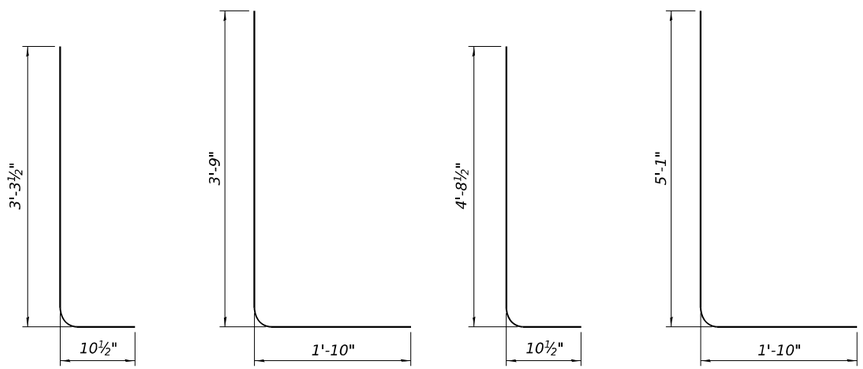

BAR d10(E) BAR d11(E) BAR d13(E) BAR d14(E)

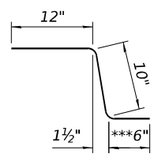

BAR c11(E)

*** *In lieu of bottom leg, c11(E) bars may be drilled and set according to Article 509.06 of the Standard Specifications. Drilled holes shall be roughened or scored per manufacturer's recommendations. Maximum depth of drilled hole shall not exceed 6".*

Contractor shall take all necessary precautions to percent drilled hole interference with deck reinforcement bars. Locate longitudinal bars to miss drilled locations. Locate drilled holes to miss transverse bars in deck.

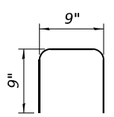

BAR d12(E)

TWO APPROACHES BILL OF MATERIAL

Bar	No.	Size	Length	Shape
a10(E)	184	#5	36'-8"	
a11(E)	244	#8	38'-7"	
b10(E)	264	#5	29'-8"	
b11(E)	336	#9	29'-8"	
c10(E)	120	#5	10'-8"	
c11(E)	120	#5	2'-4"	
d10(E)	104	#6	4'-2"	
d11(E)	104	#4	5'-7"	
d12(E)	136	#4	2'-3"	
d13(E)	16	#6	5'-7"	
d14(E)	16	#4	6'-11"	
e10(E)	64	#4	12'-8"	
e11(E)	40	#5	3'-8"	
t10(E)	142	#4	9'-11"	
w10(E)	80	#5	36'-8"	
Concrete Structures		Cu. Yd.	43.0	
Concrete Superstructure		Cu. Yd.	45.3	
Bridge Deck Grooving		Sq. Yd.	320	
Protective Coat		Sq. Yd.	503	
Concrete Superstructure (Approach Slab)		Cu. Yd.	193.1	
Reinforcement Bars, Epoxy Coated		Pound	85,940	

MODEL: Default
FILE NAME: P:\16-IL11411-IDOT - Sacramento and Paulina over I-290\Work\CADD\Sacramento - Contract 62K65\CADD_Sheets\Structural\D162K65-0160754-018-approach_slab_2.dgn
10/13/2025 4:33:45 PM

COLLINS ENGINEERS INC.

USER NAME =	DESIGNED - MPR	REVISED -	
	CHECKED - EKM	REVISED -	
PLOT SCALE =	DRAWN - KGZ	REVISED -	
PLOT DATE =	CHECKED - EKM	REVISED -	

STATE OF ILLINOIS
DEPARTMENT OF TRANSPORTATION

BRIDGE APPROACH SLAB DETAILS
STRUCTURE NO. 016-0754
SHEET S-18 OF S-37 SHEETS

F.A.I. RTE.	SECTION	COUNTY	TOTAL SHEETS	SHEET NO.
290	2019-192-B-R	COOK	237	159
		CONTRACT NO. 62K65		
	ILLINOIS	FED. AID PROJECT NHPP-EW4T(947)		

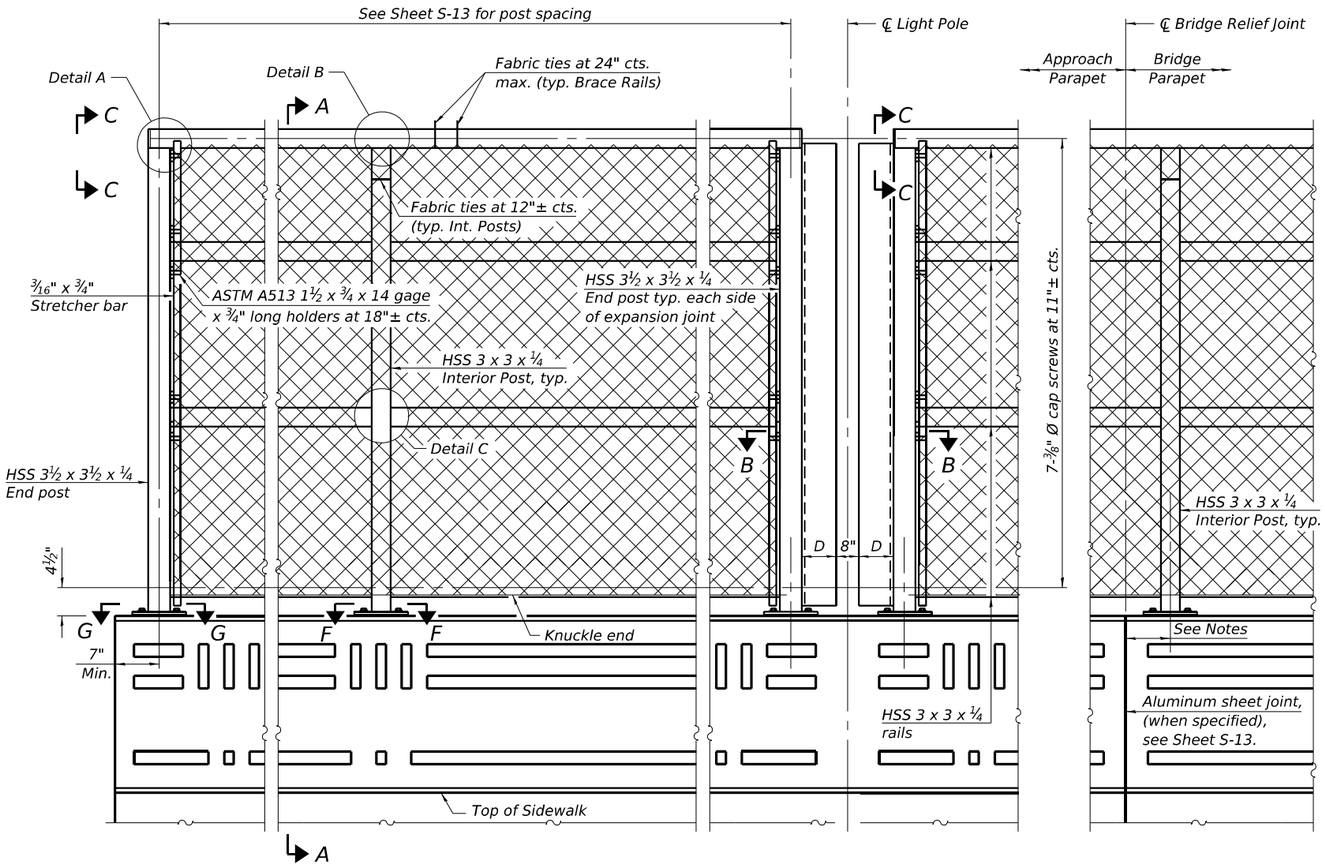

ENDS OF APPROACH PARAPETS | TYPICAL INTERIOR ELEVATION | AT LIGHT POLE | AT NON-EXPANSION JOINTS (e.g. at Bridge Relief Joints)

ELEVATION BRIDGE FENCE RAILING, CURVED

(Inside face)

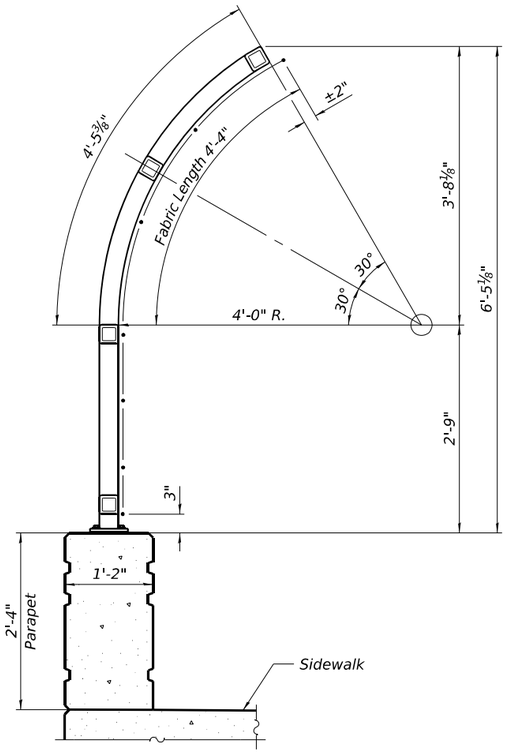

SECTION A-A

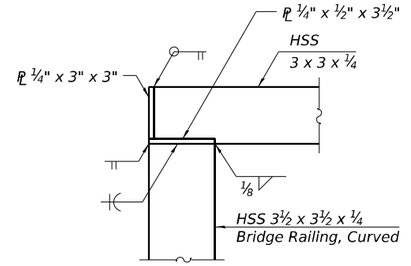

DETAIL A

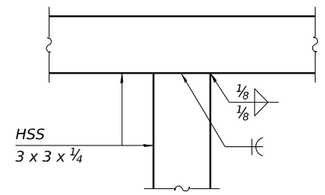

DETAIL B

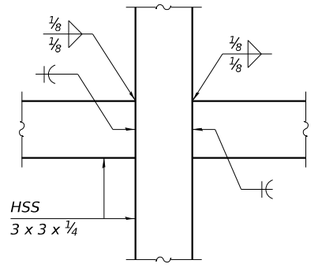

DETAIL C

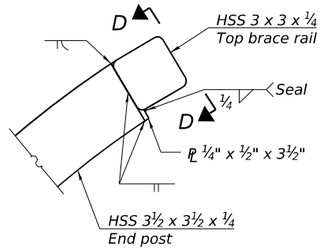

VIEW C-C

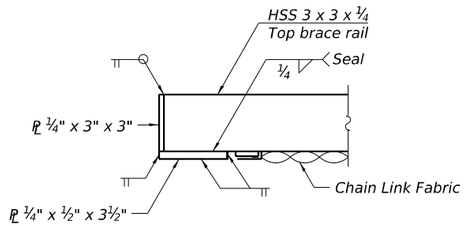

VIEW D-D

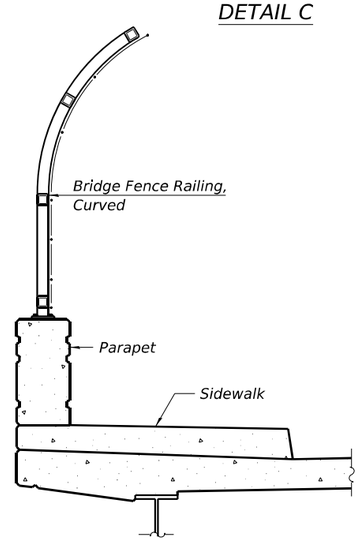

SECTION THRU DECK

RAILING CRITERIA

NCHRP 350 Test Level	4
Railing Weight (plf)	70
Max Post Spacing	10'-0''

(Sheet 1 of 2)

MODEL: Default
FILE NAME: P:\10dli1441\IDOT - Sacramento and Paulina over I-290\Work\CADD\Sacramento - Contract 62K65\CADD_Sheets\Structural\D162K65-016075404-019-railing_1.dgn
10/13/2025 4:33:48 PM

COLLINS ENGINEERS INC.

USER NAME =	DESIGNED - MPR	REVISED -	
	CHECKED - EKM	REVISED -	
PLOT SCALE =	DRAWN - KGZ	REVISED -	
PLOT DATE =	CHECKED - EKM	REVISED -	

STATE OF ILLINOIS
DEPARTMENT OF TRANSPORTATION

BRIDGE FENCE RAILING, CURVED
STRUCTURE NO. 016-0754
SHEET S-19 OF S-37 SHEETS

F.A.I. RTE.	SECTION	COUNTY	TOTAL SHEETS	SHEET NO.
290	2019-192-B-R	COOK	237	160
		CONTRACT NO. 62K65		
		ILLINOIS	FED. AID PROJECT NHPP-EW4T(947)	

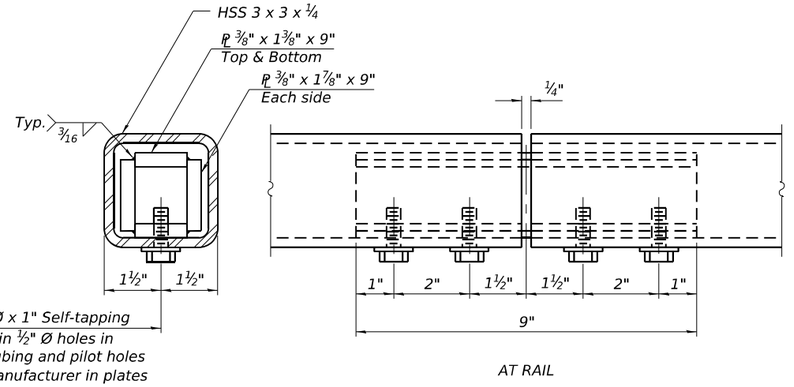

AT RAIL

MATERIAL SPLICE

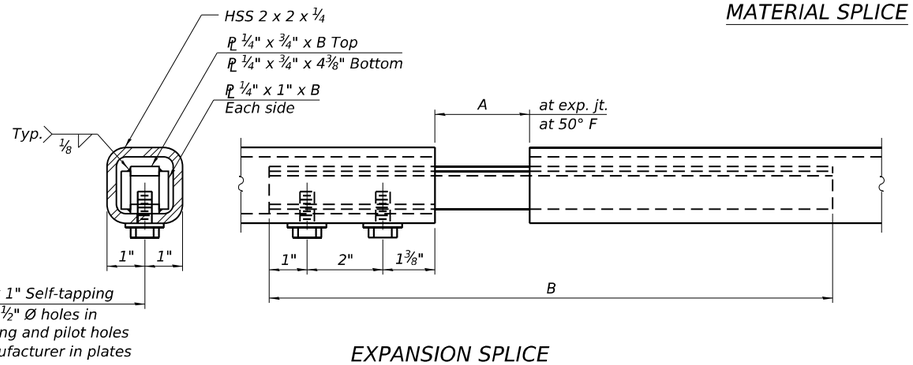

EXPANSION SPLICE

(Weld bottom plate on bolt side)

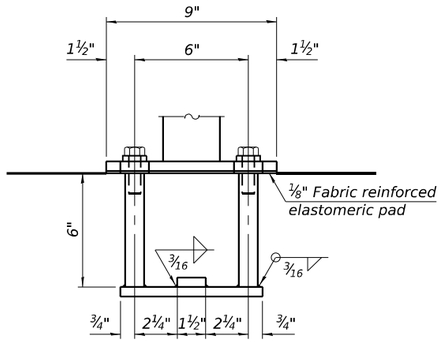

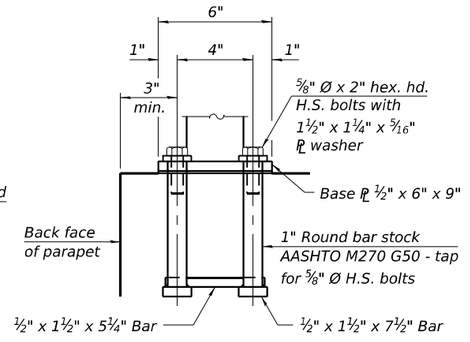

ANCHORAGE ASSEMBLY

The Bridge Fence Railing, Curved fasteners for end posts near expansion joints may need to be installed prior to installing the bent plates.

In lieu of the cast-in-place anchor device shown, the Contractor has the option of drilling and setting ⅝" Ø fully threaded anchor rods with the same plate washers as specified above and heavy hex lock nuts according to Article 509.06 of the Standard Specifications. Embedment shall be according to the manufacturer's specifications.

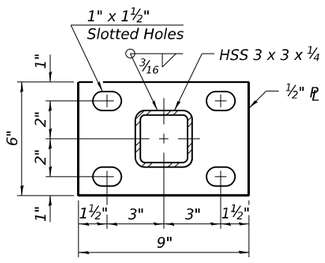

SECTION F-F

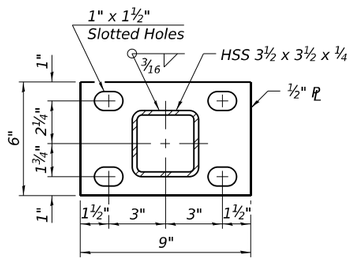

SECTION G-G

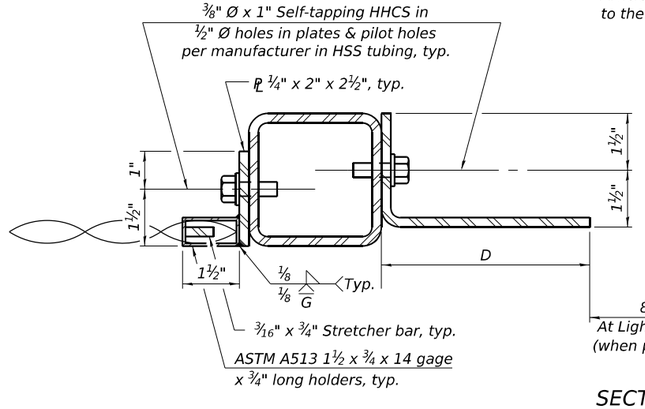

SECTION B-B

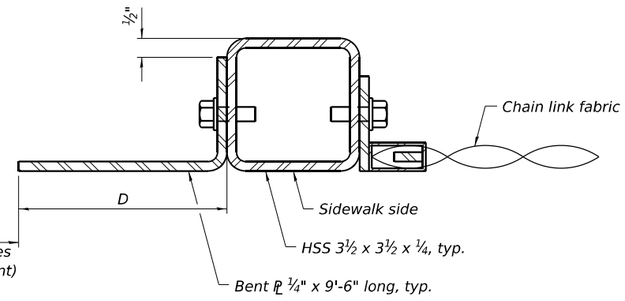

Location	T	A	B	C	D
At Light Poles	8"	NA	NA	11¾"	10"
At Bridge Relief Joints	NA - Material Splices Per Fabricator				

T= ; total movement based on total temperature range from -20°F to 120°F along centerline of roadway at expansion joint.
OR
8" hand-hole access for maintenance of light poles (when present; replace splice with 8" gap)

Notes:

Place reinforcement bars to miss anchor rod locations.

CVN testing is not required for the HSS tubing used in the Bridge Fence Railing, Curved.

All HSS tubing used for the Handrail shall be CVN tested according to Article 1006.34(b) of the Standard Specifications.

All heavy hex nuts shall be according to ASTM A 563 grade DH.

All fully threaded anchor rods shall be ASTM F1554 grade 105.

The post base plate shall be fastened to the curb snug tight and given an additional ⅛" turn.

Contractor shall offset posts to miss any aluminum sheet or cork joints for sufficient installation of the anchorage assembly.

Rail splice inserts may be built out of bent plates of the same thicknesses and outside geometry limits as the 4 plate rail splice inserts shown.

All steel rail elements shall be galvanized according to Article 509.05 of the Standard Specifications.

BILL OF MATERIAL

Item	Unit	Quantity
Bridge Fence Railing, Curved	Foot	494

MODEL: Default
FILE NAME: P:\10dli\14411-IDOT - Sacramento and Paulina over I-290\Work\CADD\Sacramento - Contract 62K65\CADD_Sheets\Structural\D162K65-0160754-020-railing_2.dgn
10/13/2025 4:33:49 PM

COLLINS ENGINEERS INC.

USER NAME =	DESIGNED - MPR	REVISED -	
	CHECKED - EKM	REVISED -	
PLOT SCALE =	DRAWN - KGZ	REVISED -	
PLOT DATE =	CHECKED - EKM	REVISED -	

STATE OF ILLINOIS
DEPARTMENT OF TRANSPORTATION

BRIDGE FENCE RAILING, CURVED
STRUCTURE NO. 016-0754
SHEET S-20 OF S-37 SHEETS

F.A.I. RTE.	SECTION	COUNTY	TOTAL SHEETS	SHEET NO.
290	2019-192-B-R	COOK	237	161
		CONTRACT NO. 62K65		
		ILLINOIS	FED. AID PROJECT NHPP-EW4T(947)	

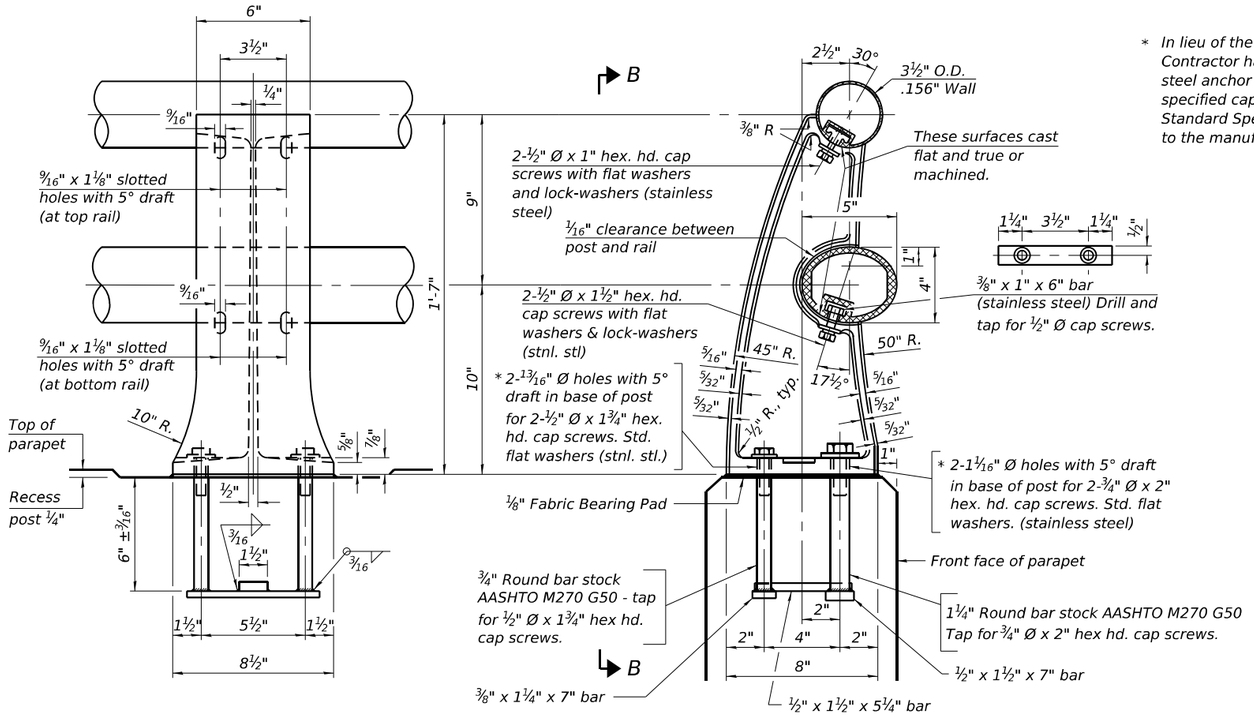

* *In lieu of the cast-in-place anchor device shown, the Contractor has the option of drilling and setting stainless steel anchor rods of the same diameter and grade as the specified cap screws according to Article 509.06 of the Standard Specifications. Embedment shall be according to the manufacturer's specifications.*

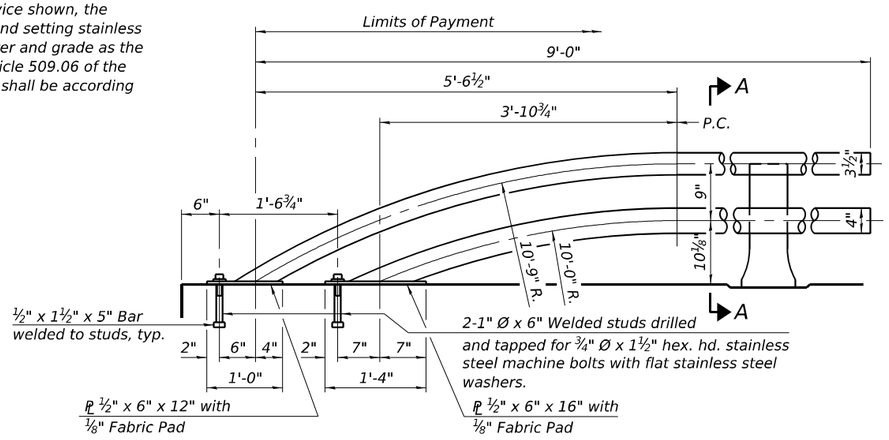

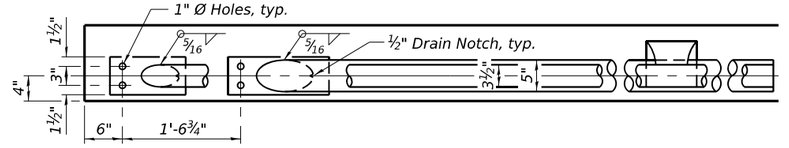

RAIL TERMINAL SECTION

Note: The end rail post shall be set back as required for the terminal rail section.

VIEW B-B

SECTION A-A

RAIL POST DETAILS

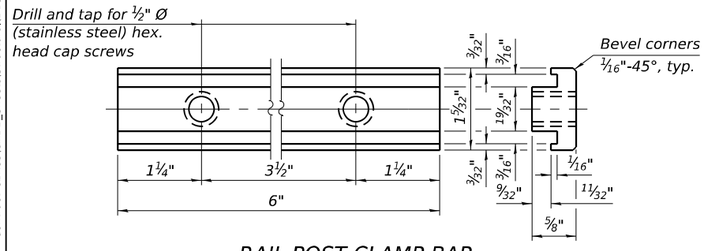

RAIL POST CLAMP BAR

For Top Rail

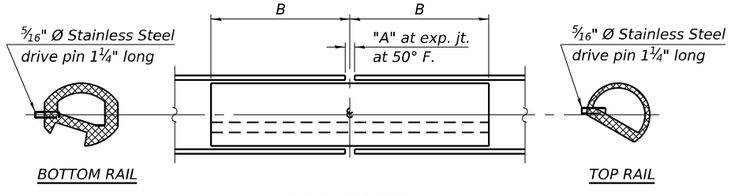

RAIL SPLICE

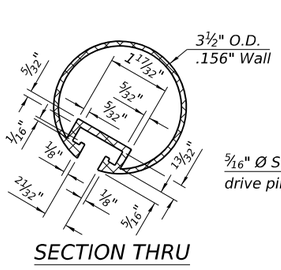

SECTION THRU TOP RAIL

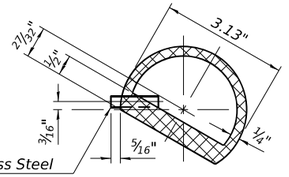

SECTION THRU TOP RAIL SPLICE

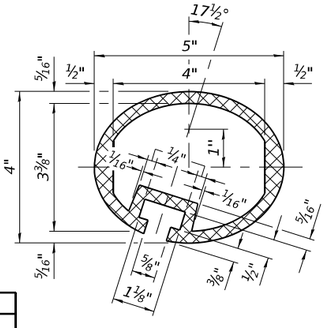

SECTION THRU BOTTOM RAIL

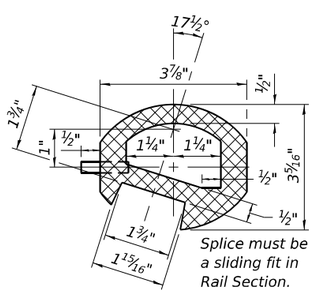

SECTION THRU BOTTOM RAIL SPLICE

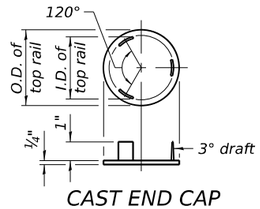

CAST END CAP

For top rail
Drive Fit Type

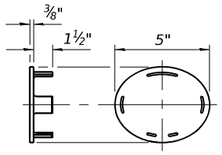

CAST END CAP

For bottom rail
Drive Fit Type

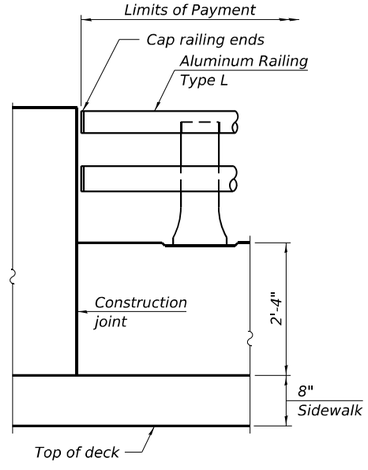

RAIL END TREATMENT FOR TYPE 5 AND 6 TERMINAL

Notes:

All Posts shall be normal to parapet.

All joints in rail shall be spliced per detail.

All exposed rail ends shall be capped per detail.

Provide 1-⅛" and 2-1/16" Aluminum Shims for 25% of the Posts. Rail elements shall be parallel to Grade, high spots shall be ground and low spots shimmed.

Place reinforcement bars to miss anchor rod locations.

See Sheet S-18 for rail post spacing.

RAILING CRITERIA

NCHRP 350 Test Level	4
Post Spacing Range	7'-0" - 10'-0"
Rail Weight (plf)	40

R-20 5-15-2023

SPLICE DIMENSIONS

Location	T	A	B
All locs. not over exp. jts.	0	⅜"	1'-2"
Over Strip Seal Jt.	≤4"	2½"	1'-2"
Over Finger or Modular Jt.	≤9½"	5½"	1'-7¾"
Over Finger or Modular Jt.	≤15"	8¼"	2'-1¼"

T = ; total movement along centerline of roadway at expansion joint.

BILL OF MATERIAL

Item	Unit	Quantity
Aluminum Railing, Type L	Foot	104

COLLINS ENGINEERS INC.

USER NAME =	DESIGNED - MPR	REVISED -	
	CHECKED - EKM	REVISED -	
PLOT SCALE =	DRAWN - KGZ	REVISED -	
PLOT DATE =	CHECKED - EKM	REVISED -	

STATE OF ILLINOIS
DEPARTMENT OF TRANSPORTATION

ALUMINUM RAILING TYPE L
STRUCTURE NO. 016-0754
SHEET S-21 OF S-37 SHEETS

F.A.I. RTE.	SECTION	COUNTY	TOTAL SHEETS	SHEET NO.
290	2019-192-B-R	COOK	237	162
		CONTRACT NO. 62K65		
		ILLINOIS	FED. AID PROJECT NHPP-EW4T(947)	

MODEL: Default
FILE NAME: P:\10-IL\1441-IDOT - Sacramento and Paulina over I-290\Work\CADD\Sacramento - Contract 62K65\CADD_Sheets\Structural\D162K65-0160754-021-Aluminum_railing.dgn
10/13/2025 4:33:51 PM

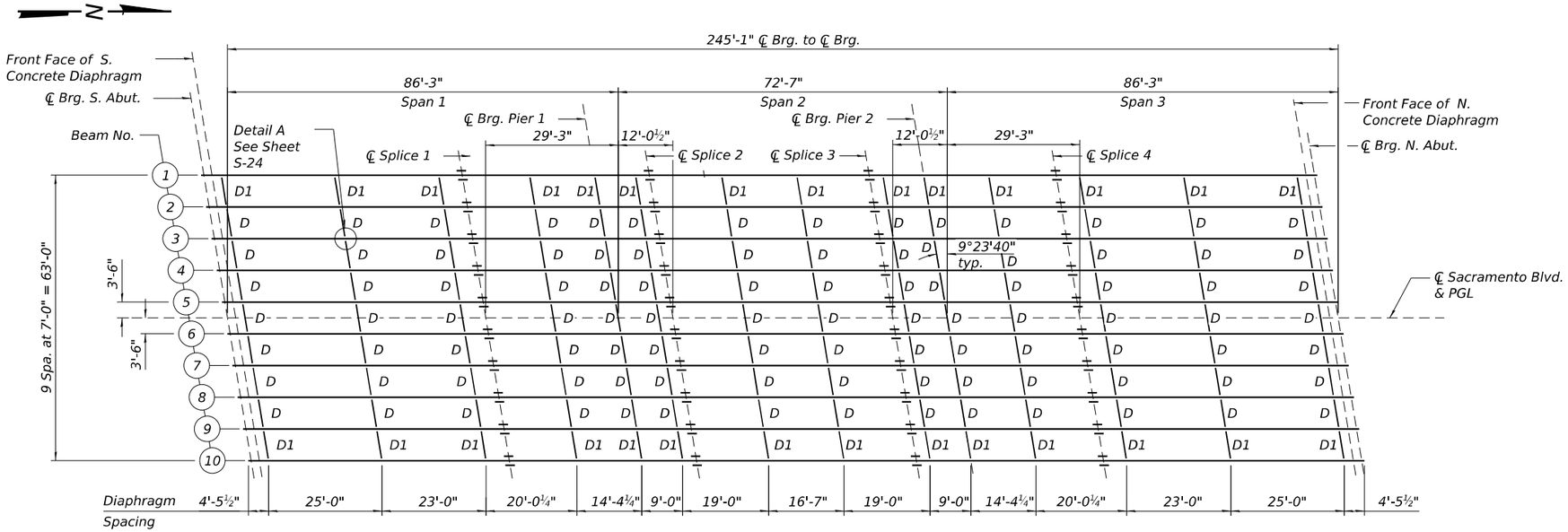

FRAMING PLAN

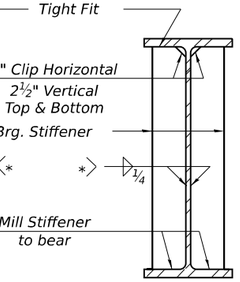

* Terminate ¼" (±⅛") from the end of plate intersects.

BEARING STIFFENER DETAILS

80 bearing stiffeners required

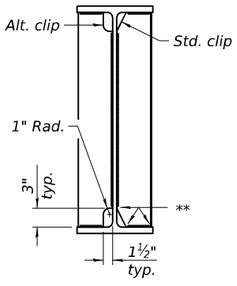

WELD LIMITS AND CLIP DETAILS

** Stop welds ¼" (±⅛") from edges as shown. Typical.

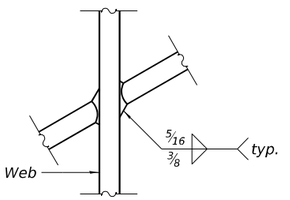

WEB WELD DETAIL (SKEWED)

BEAM ELEVATION

**(No studs) See S-24 for Shear Connector Detail at Splices*

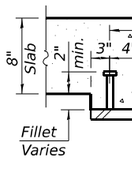

¾" Ø Granular or solid flux filled headed studs automatically end welded to flange. (No. Req'd.= 15,330)

SECTION A-A

Note:
All diaphragms between beams shall be installed with erection pins and bolts in accordance with the erection plan approved by the Engineer. Individual diaphragms at supports may be temporarily disconnected to install bearing anchor bolts.

Load carrying components designated "CVN" shall conform to the Charpy-V-Notch Impact Energy Requirement, Zone 2.

All W27 beams shall be AASHTO M270 Gr. 50

TOP OF BEAM ELEVATIONS TABLE

Beam	℄ Brg. S. Abut.	Splice #1	℄ Pier 1	Splice #2	Splice #3	℄ Pier 2	Splice #4	℄ Brg. N. Abut.
1	598.22	600.28	600.64	600.78	600.87	600.76	600.51	598.56
2	598.16	600.21	600.55	600.69	600.76	600.65	600.37	598.41
3	598.23	600.30	600.65	600.79	600.84	600.72	600.44	598.45
4	598.38	600.44	600.77	600.91	600.93	600.81	600.52	598.51
5	598.54	600.57	600.89	601.02	601.03	600.90	600.59	598.57
6	598.58	600.60	600.91	601.03	601.02	600.89	600.57	598.53
7	598.52	600.52	600.82	600.94	600.90	600.77	600.43	598.37
8	598.47	600.44	600.73	600.84	600.79	600.64	600.30	598.22
9	598.42	600.38	600.65	600.76	600.68	600.54	600.18	598.09
10	598.57	600.51	600.77	600.87	600.78	600.63	600.26	598.15

For Fabrication only

INTERIOR GIRDER MOMENT TABLE				
		0.4 Sp. 1 or 0.6 Sp. 2	Pier 1 or 2	0.5 Sp. 2
I_s	(in^4)	7,860	11,900	7,860
$I_c(n)$	(in^4)	20,179	———	20,179
$I_c(3n)$	(in^4)	14,483	———	14,483
$I_c(cr)$	(in^4)	———	14,118	———
S_s	(in^3)	559	814	559
$S_c(n)$	(in^3)	792	———	792
$S_c(3n)$	(in^3)	712	———	712
$S_c(cr)$	(in^3)	———	879	———
S_x	(in^3)	710	894	797
DC1	(k/')	1.00	1.00	1.00
M_{DC1}	('k)	578	-657	-42
DC2	(k/')	0.30	0.30	0.30
M_{DC2}	('k)	190	-211	-9
DW	(k/')	0.18	0.18	0.18
M_{DW}	('k)	116	-211	-9
LLDF		0.533	0.570	0.570
M_{L+IM}	('k)	946	-972	628
f_f (Strength I)	(ksi)	0.00	0.00	0.00
$M_u + \frac{1}{3} f_f S_x$	('k)	2790	-2980	1028
$\phi_f M_n$	('k)	3762	3678	3762
f_s DC1	(ksi)	12.4	-9.69	-0.90
f_s DC2	(ksi)	3.17	-2.88	-0.15
f_s DW	(ksi)	1.94	-1.76	-0.08
f_s (f_L+IM)	(ksi)	14.3	-13.3	9.5
f_f (Service II)	(ksi)	0.00	0.00	0.00
$f_s + f_f/2$ (Service II)	(ksi)	36.2	-31.6	11.2
Service II Resistance	(ksi)	47.5	47.5	47.5
$f_s + f_f/3$ (Strength I)	(ksi)	———	———	———
$\phi_f F_n$	(ksi)	———	———	———
V_f	(k)	40.1	———	36.7

GIRDER REACTION TABLE			
		Abut.	Pier
LLDF		0.743	0.743
OCF		———	———
R_{DC1}	(k)	33.6	83.9
R_{DC2}	(k)	10.8	26.8
R_{DW}	(k)	6.6	16.4
R_L	(k)	73.6	121.4
R_{Im}	(k)	15.2	21.4
R_{Total}(Strength I)(Impact)	(k)	220.8	413.0
R_{Total}(Strength I)(No Impact)	(k)	194.2	375.5

INTERIOR GIRDER DEFLECTION TABLE		
Δ_{ALLOW}	(in)	0.658
Δ_{L+IM}	(in)	0.331

I_s, S_s: Non-composite moment of inertia and section modulus of the steel section used for computing f (Total-Strength I, and Service II) due to non-composite dead loads ($in.^4$ and $in.^3$).

$I_c(n)$, $S_c(n)$: Composite moment of inertia and section modulus of the steel and deck based upon the modular ratio, "n", used for computing f_s(Total-Strength I, and Service II) in uncracked sections due to short-term composite live loads ($in.^4$ and $in.^3$).

$I_c(3n)$, $S_c(3n)$: Composite moment of inertia and section modulus of the steel and deck based upon 3 times the modular ratio, "3n", used for computing f_s(Total-Strength I, and Service II) in uncracked sections, due to long-term composite (superimposed) dead loads ($in.^4$ and $in.^3$).

$I_c(cr)$, $S_c(cr)$: Composite moment of inertia and section modulus of the steel and longitudinal deck reinforcement, used for computing f_s (Total-Strength I and Service II) in cracked sections, due to both short-term composite live loads and long-term composite (superimposed) dead loads ($in.^4$ and $in.^3$).

S_x: Section modulus about the major axis of a section to the controlling flange, tension or compression, taken as yield moment with respect to the controlling flange over the yield strength of the controlling flange ($in.^3$).

DC1: Un-factored non-composite dead load (kips/ft.).

M_{DC1}: Un-factored moment due to non-composite dead load (kip-ft.).

DC2: Un-factored long-term composite (superimposed excluding future wearing surface) dead load (kips/ft.).

M_{DC2}: Un-factored moment due to long-term composite (superimposed excluding future wearing surface) dead load (kip-ft.).

DW: Un-factored long-term composite (superimposed future wearing surface only) dead load (kips/ft.).

M_{DW}: Un-factored moment due to long-term composite (superimposed future wearing surface only) dead load (kip-ft.).

LLDF: Live Load Distribution Factor for moment and shear computed according to Article 4.6.2.2 and further IDOT provisions.

M_{L+IM}: Un-factored live load moment plus dynamic load allowance (impact) (kip-ft.).

M_u: Strength I load combination of factored design moments (kip-ft.). $1.25\ (M_{DC1} + M_{DC2}) + 1.5\ M_{DW} + 1.75\ M_{L+IM}$

f_f: Factored calculated flange lateral bending stress as calculated using Article 6.10.1.6 and as further simplified by IDOT provisions (ksi).

$\phi_f M_n$: Factored nominal flexural resistance of the section determined as specified in Article 6.10.7.1 or A6 as applicable (kip-ft.).

f_s DC1: Un-factored stress at edge of flange for controlling steel flange due to vertical non-composite dead loads as calculated below (ksi).
M_{DC1} / S_s

f_s DC2: Un-factored stress at edge of flange for controlling steel flange due to vertical composite dead loads as calculated below (ksi).
$M_{DC2} / S_c(3n)$ or $M_{DC2} / S_c(cr)$ as applicable.

f_s DW: Un-factored stress at edge of flange for controlling steel flange due to vertical composite future wearing surface loads as calculated below (ksi).
$M_{DW} / S_c(3n)$ or $M_{DW} / S_c(cr)$ as applicable.

f_s (f_L+ IM): Un-factored stress at edge of flange for controlling steel flange due to vertical composite live load plus impact loads as calculated below (ksi).
$M_{L+IM} / S_c(n)$ or $M_{L+IM} / S_c(cr)$ as applicable.

$f_s + f_f/2$ (Service II): Sum of stresses as computed below (ksi).
f_sDC1 + f_sDC2 + f_sDW + 1.3 f_s (f_L+ IM) + $f_f/2$

Service II Resistance: Composite ($0.95R_hF_{yf}$) or noncomposite ($0.80R_hF_{yf}$) stress capacity according to Article 6.10.4.2 (ksi).

$f_s + f_f/3$ (Strength I): Sum of stresses as computed below on non-compact sections (ksi).
1.25 (f_sDC1 + f_sDC2) + 1.5 f_sDW + 1.75 f_s (f_L+ IM) + $f_f/3$

$\phi_f F_n$: Factored nominal flexural resistance of the section as specified in Article 6.10.7.2 or 6.10.8 as applicable (ksi).

V_f: Maximum factored shear range in span computed according to Article 6.10.10.

OCF: Obtuse Correction Factor according to Article 4.6.2.2.3c or as further simplified by IDOT provisions.

R_{DC1}: Un-factored reaction due to non-composite dead load (kip).

R_{DC2}: Un-factored reaction due to long-term composite (superimposed excluding future wearing surface) dead load (kip).

R_{DW}: Un-factored reaction due to long-term composite (superImposed future wearing surface only) dead load (kip).

R_L: Un-factored live load reaction (kip).

R_{IM}: Un-factored dynamic load allowance (impact) (kip).

R_{Total}(Strength I)(Impact): Strength I load combination of factored design reactions (kip).
$1.25\ (R_{DC1} + R_{DC2}) + 1.5R_{DW} + 1.75\ (R_L + R_{IM})$

R_{Total}(Strength I)(No Impact): Strength I load combination of factored design reactions, not including dynamic load allowance (Impact) (kip).
$1.25\ (R_{DC1} + R_{DC2}) + 1.5R_{DW} + 1.75\ (R_L)$

MODEL: Default
FILE NAME: P:\10-ILL\14411-IDOT - Sacramento and Paulina over I-290\Work\CADD\Sacramento - Contract 62K65\CADD_Sheets\Structural\D162K65-0160754-023-moment_rxn_table.dgn
10/13/2025 4:33:54 PM

COLLINS ENGINEERS INC.

USER NAME =	DESIGNED - MPR	REVISED -
	CHECKED - EKM	REVISED -
PLOT SCALE =	DRAWN - KGZ	REVISED -
PLOT DATE =	CHECKED - EKM	REVISED -

STATE OF ILLINOIS
DEPARTMENT OF TRANSPORTATION

MOMENT REACTION TABLE
STRUCTURE NO. 016-0754
SHEET S-23 OF S-37 SHEETS

F.A.I. RTE.	SECTION	COUNTY	TOTAL SHEETS	SHEET NO.
290	2019-192-B-R	COOK	237	164
		CONTRACT NO. 62K65		
	ILLINOIS	FED. AID PROJECT NHPP-EW4T(947)		

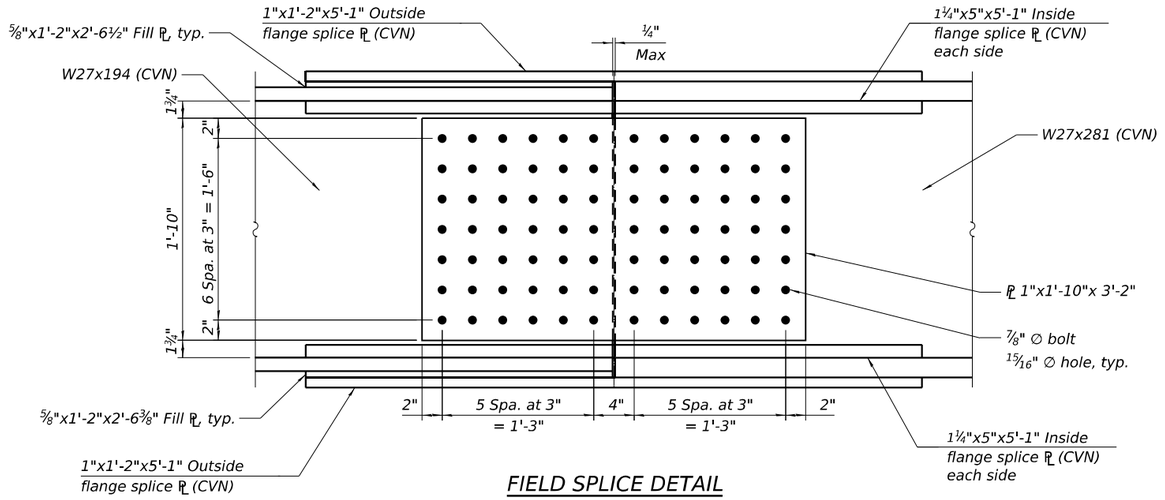

FIELD SPLICE DETAIL

(84 Bolts Required for each web)
4 splices per beam

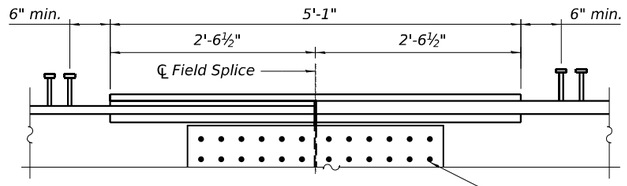

SHEAR CONNECTOR DETAIL AT SPLICES

Do NOT place shear connectors on splice plates.
40 Field Splices Required

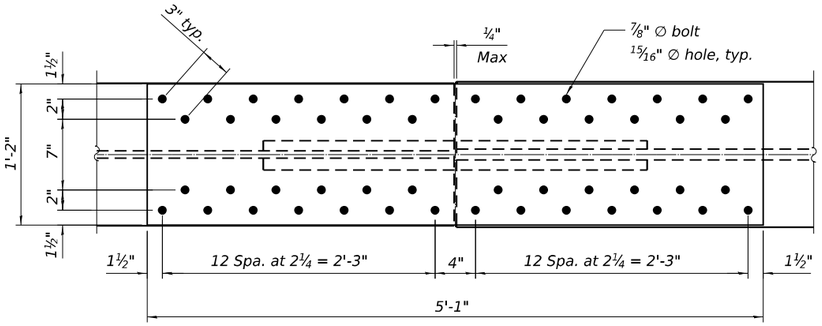

BOTTOM OUTER FLANGE PLATE

(52 Bolts Required for each flange
Top outer flange plate similar)

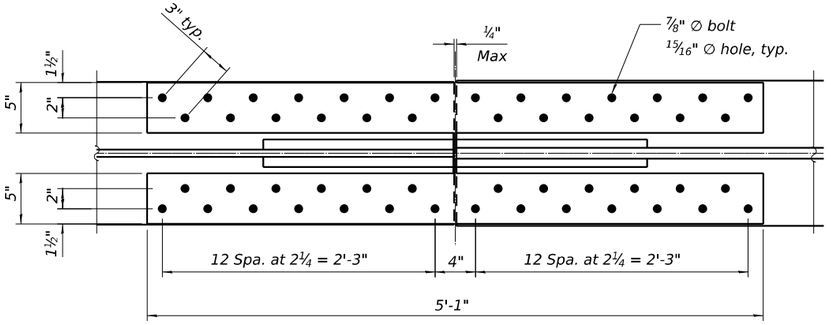

BOTTOM INNER FLANGE PLATE

(52 Bolts Required for each flange
Top inner flange plate similar)

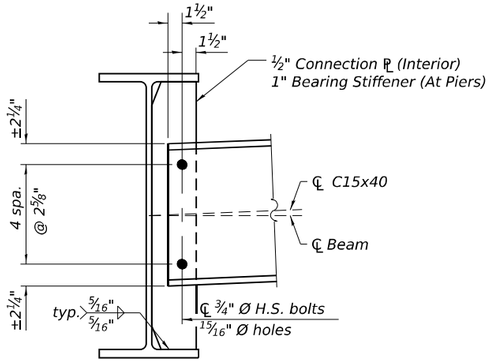

INTERIOR DIAPHRAGM D

(98 Diaphragms Required)

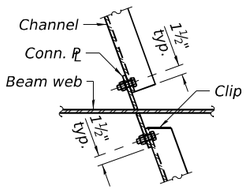

DETAIL A

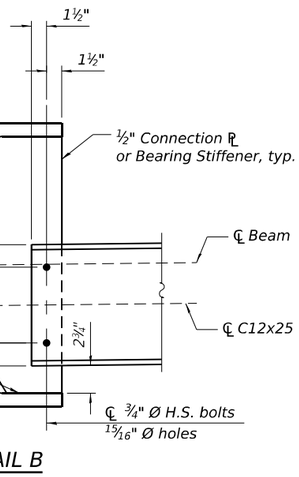

DETAIL B

Notes:

1. *Two hardened washers required for each set of oversized holes. Alternate channels of equal depth and larger weight are permitted to facilitate material acquisition. Alternate channels, if utilized, shall be provided at no additional cost to the Department.*

2. *Load carrying components designated "CVN" shall conform to the Charpy-V-Notch Impact Energy Requirement, Zone 2.*

3. *All splice plates (except filler plates) shall be AASHTO M270, Grade 50.*

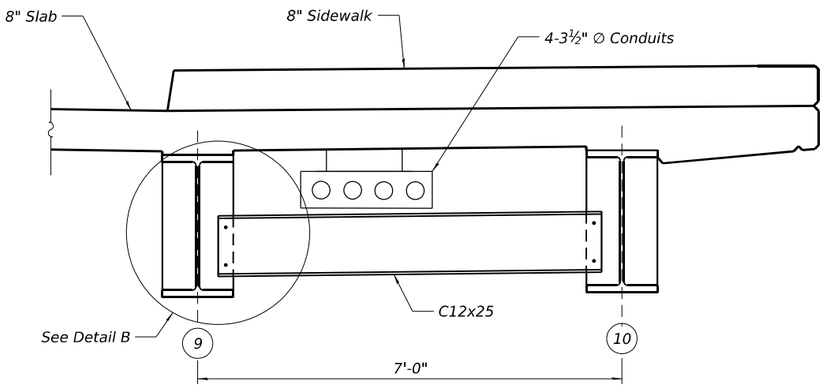

INTERIOR DIAPHRAGM D1

(28 Diaphragms Required)
(Diaphragm between Beams 1-2 similar)
Provide timber blocking for deck pour. See General Note 7 on Sheet S-2.

MODEL: Default
FILE NAME: P:\10-LI\14411-IDOT - Sacramento and Paulina over I-290\Work\CADD\Sacramento - Contract 62K65\CADD_Sheets\StructuralD162K65-016075A-024-structural_steel_details 1.dgn
10/13/2025 4:33:56 PM

COLLINS ENGINEERS INC.

USER NAME =	DESIGNED - MPR	REVISED -
	CHECKED - EKM	REVISED -
PLOT SCALE =	DRAWN - KGZ	REVISED -
PLOT DATE =	CHECKED - EKM	REVISED -

STATE OF ILLINOIS
DEPARTMENT OF TRANSPORTATION

STRUCTURAL STEEL DETAILS
STRUCTURE NO. 016-0754
SHEET S-24 OF S-37 SHEETS

F.A.I. RTE.	SECTION	COUNTY	TOTAL SHEETS	SHEET NO.
290	2019-192-B-R	COOK	237	165
		CONTRACT NO. 62K65		
	ILLINOIS	FED. AID PROJECT NHPP-EW4T(947)		

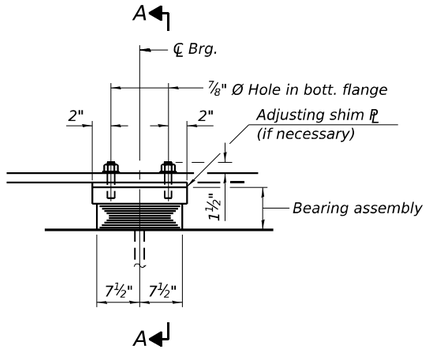

ELEVATION AT PIER

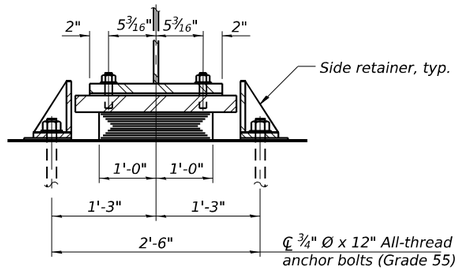

SECTION A-A

TYPE I ELASTOMERIC EXP. BRG.

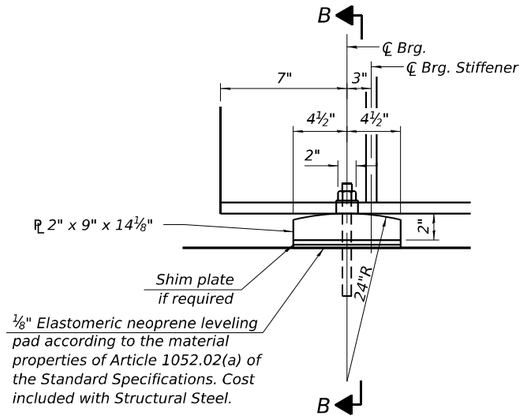

ELEVATION AT ABUTMENT

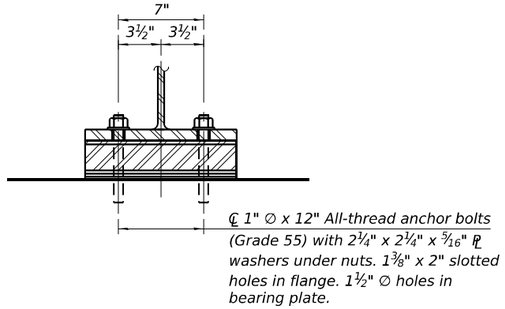

SECTION B-B

FIXED BEARING

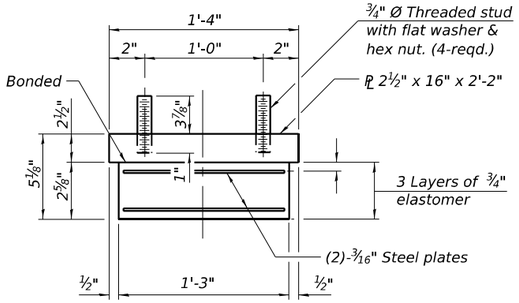

BEARING ASSEMBLY

Notes:

1. Side retainers and stainless steel plates shall be included in the cost of Elastomeric Bearing Assembly, Type I.
2. Anchor bolts and side retainers at all supports shall be installed as each member is erected unless an equivalent temporary means of lateral restraint is used.
3. The structural steel plates of the Bearing Assembly shall conform to the requirements of AASHTO M270 Grade 50.
4. All bearing plates, side retainers, shim plates, anchor bolts, nuts and washers shall be galvanized according to AASHTO M111 or M232 as applicable.
5. Two 1/8 in. adjusting shims shall be provided for each bearing in addition to all other plates or shims and placed as shown on bearing details.

Note:
Shim plates shall not be placed under bearing assembly.

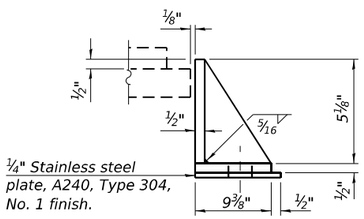

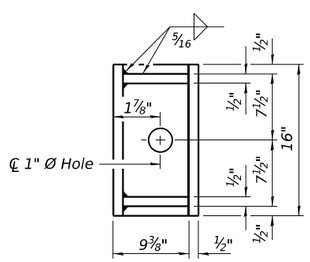

SIDE RETAINER

Equivalent rolled angle with stiffeners will be allowed in lieu of welded plates.

BILL OF MATERIAL

Item	Unit	Total
Elastomeric Bearing Assembly Type I	Each	20
Anchor Bolts, ¾"	Each	40
Anchor Bolts, 1"	Each	40

Notes:
1. Pour steps monolithically with cap.
2. For details of piles see Sheet S-35.
3. Bar terminators, paid for separately, see Total Bill of Material.
4. See Sheet S-28 for Wingwall Details.
5. Bars indicated thus 1x2-#8 etc. indicates 1 line of bars with 2 lengths per line.

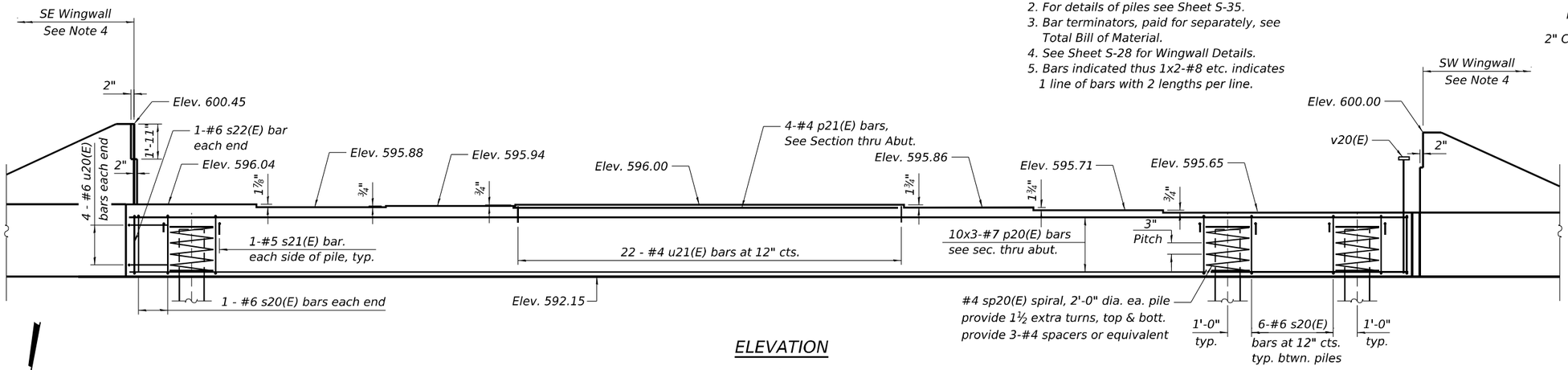

ELEVATION

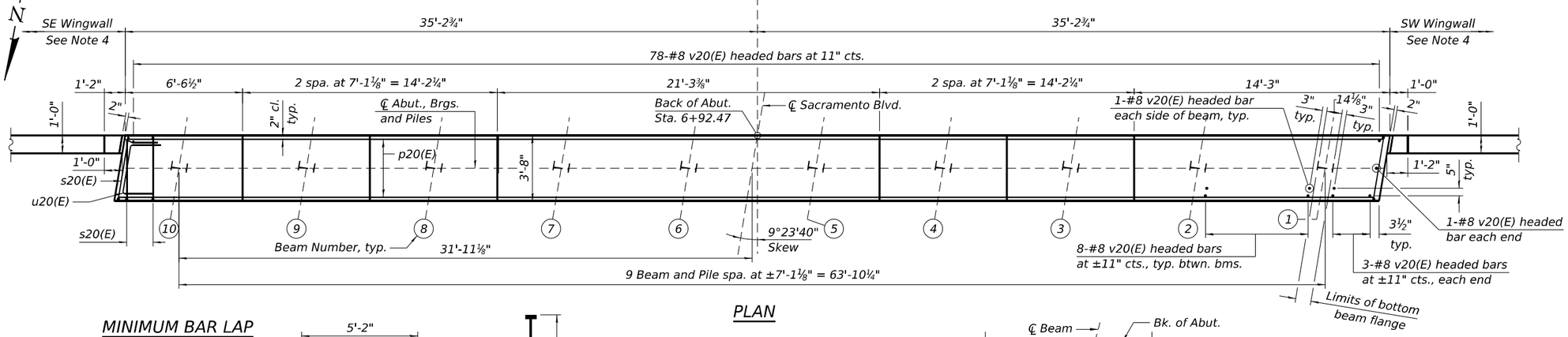

SEC. THRU ABUT.

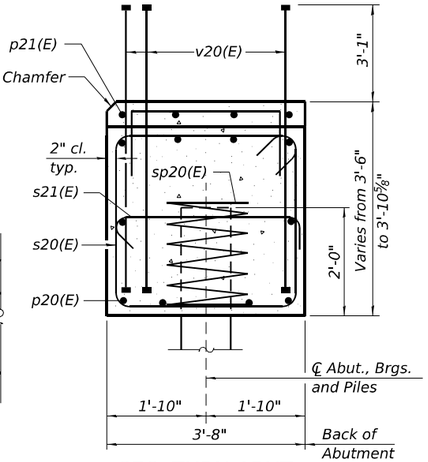

Dimensions at right angles to abutment.

BILL OF MATERIAL

Bar	No.	Size	Length	Shape
h20(E)	2	#5	10'-5"	
h21(E)	4	#6	12'-8"	
h22(E)	18	#6	14'-9"	
h23(E)	4	#4	6'-7"	
h24(E)	2	#4	7'-3"	
h25(E)	2	#5	10'-5"	
h26(E)	8	#6	13'-0"	
h27(E)	16	#6	14'-9"	
h28(E)	4	#4	5'-10"	
h29(E)	2	#4	6'-5"	
p20(E)	30	#7	26'-8"	
p21(E)	4	#4	28'-5"	
s20(E)	62	#6	14'-4"	
s21(E)	20	#5	4'-4"	
* sp20(E)	10	#4	2'-0"	
t20(E)	16	#4	5'-10"	
u20(E)	10	#6	11'-11"	
u21(E)	22	#4	6'-2"	
v20(E)	178	#8	6'-5"	
v21(E)	4	#5	8'-0"	
v22(E)	10	#5	11'-7"	
v23(E)	8	#4	7'-5"	
v24(E)	15	#4	13'-5"	
v25(E)	4	#5	7'-6"	
v26(E)	20	#5	11'-2"	
v27(E)	7	#4	7'-7"	
v28(E)	13	#4	13'-7"	
w20(E)	12	#4	6'-6"	
w21(E)	12	#4	5'-10"	

Concrete Structures	Cu. Yd.	41.8
Reinforcement Bars, Epoxy Coated	Pound	8,760
Furnishing Steel Piles HP 14x89	Foot	540
Driving Piles	Foot	540
Test Pile Steel HP 14x89	Each	1
Pile Shoes	Each	10

* Length is height of spiral.

MINIMUM BAR LAP

#7 bar = 4'-11"

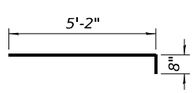

BAR t20(E)

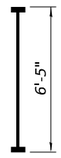

BAR v20(E)

(Headed. 356 - #8 Bar terminators)

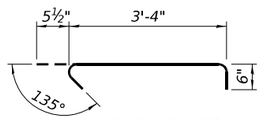

BAR s21(E)

PLAN

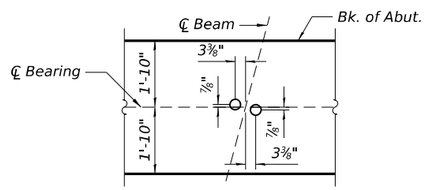

ANCHOR BOLT PLAN

PILE DATA

Type: HP 14x89 with pile shoes
Nominal Required Bearing: 705 kips
Factored Resistance Available: 358 kips
Est. Length: 60 ft.
No. Production Piles: 9
No. Test Piles: 1

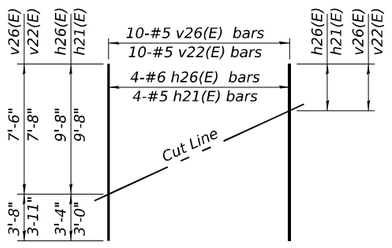

FIELD CUTTING DIAGRAM

Order h21(E), h26(E), v22(E), and v26(E) bars full length. Cut as shown and use remainder of bars in opposite face.

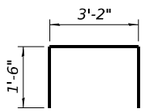

BAR u21(E)

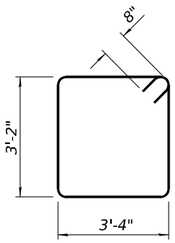

BAR s20(E)

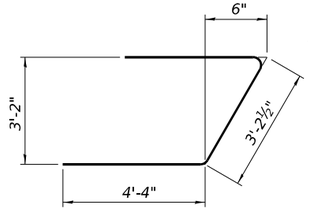

BAR u20(E)

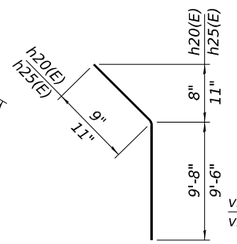

BAR h20(E) & h25(E)

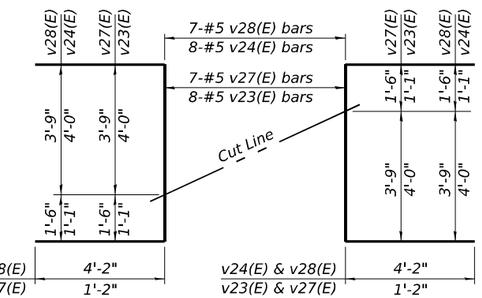

FIELD CUTTING DIAGRAM

Order v23(E), v24(E), v27(E), and v28(E) full length. Cut as shown and use remainder of bars in other wing.

Notes:
1. Pour steps monolithically with cap.
2. For details of piles, see Sheet S-35.
3. Bar terminators, paid for separately, see Total Bill of Material.
4. See Sheet S-28 for Wingwall Details.
5. Bars indicated thus 1x2-#8 etc. indicates 1 line of bars with 2 lengths per line.

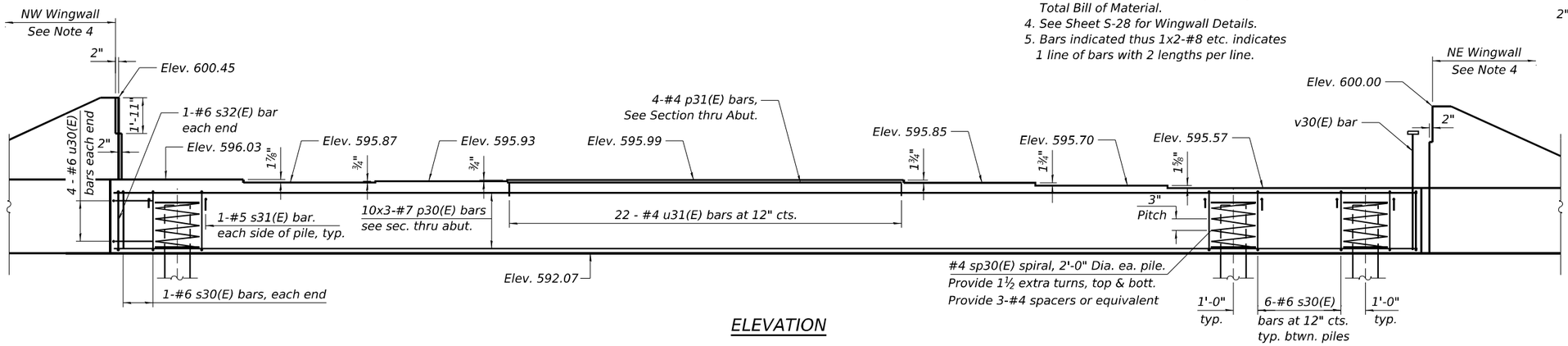

ELEVATION

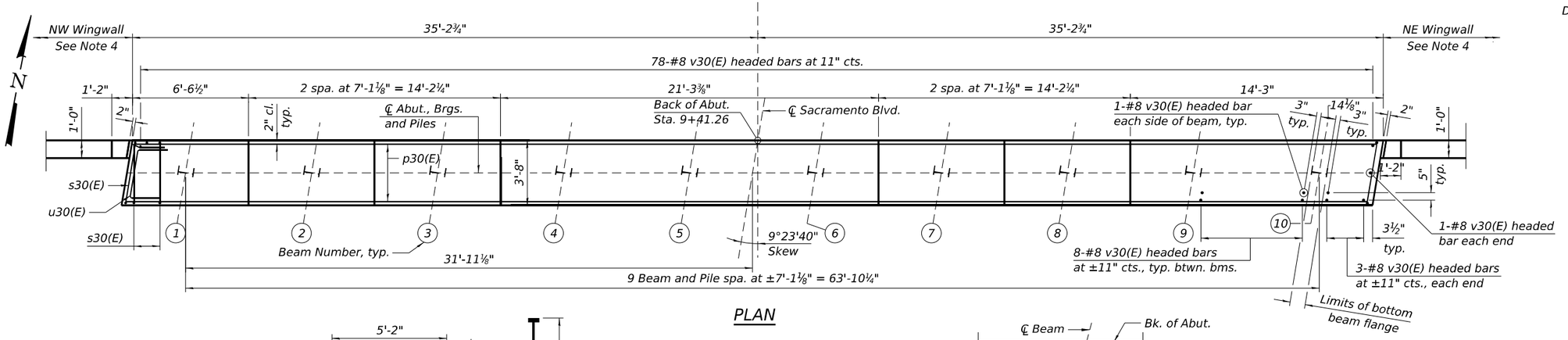

PLAN

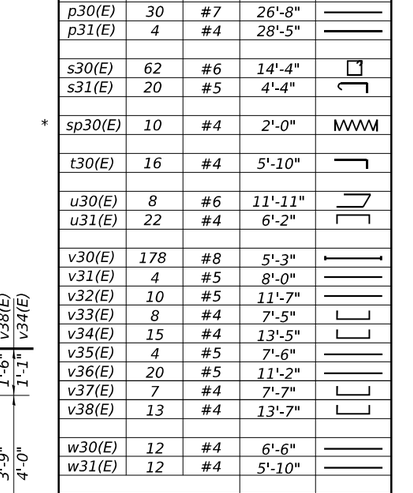

SEC. THRU ABUT.

Dimensions at right angles to abutment.

MINIMUM BAR LAP

#7 bar = 4'-11"

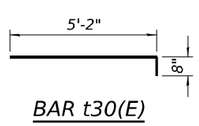

BAR t30(E)

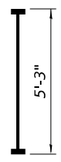

BAR v30(E)

(Headed. 356 - #8 Bar terminators)

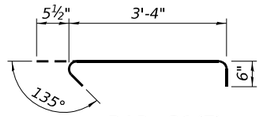

BAR s31(E)

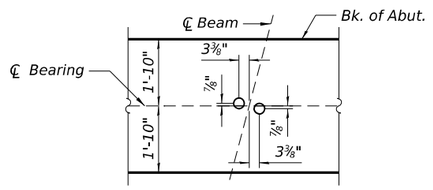

ANCHOR BOLT PLAN

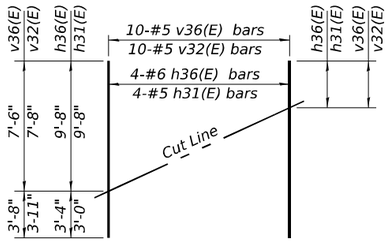

FIELD CUTTING DIAGRAM

Order h31(E), h36(E), v32(E), and v36(E), bars full length. Cut as shown and use remainder of bars in opposite face.

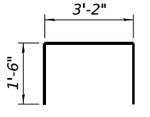

BAR u31(E)

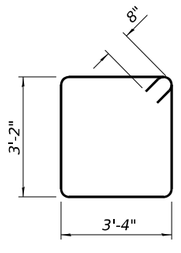

BAR s30(E)

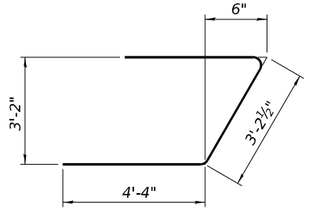

BAR u30(E)

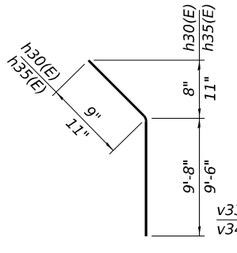

BAR h30(E) & h35(E)

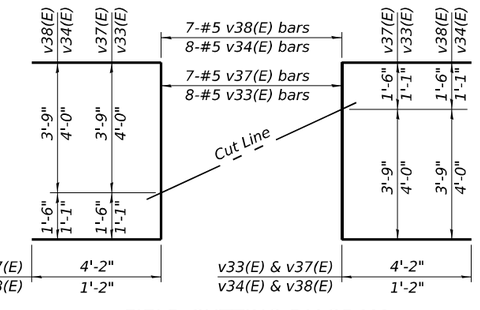

FIELD CUTTING DIAGRAM

Order v33(E), v34(E), v37(E), and v38(E) full length.
Cut as shown and use remainder of bars in other wing.

PILE DATA

Type: HP 14x89 with pile shoes
Nominal Required Bearing: 705 kips
Factored Resistance Available: 367 kips
Est. Length: 65 ft.
No. Production Piles: 9
No. Test Piles: 1

BILL OF MATERIAL

Bar	No.	Size	Length	Shape
h30(E)	2	#5	10'-5"	
h31(E)	4	#6	12'-8"	
h32(E)	18	#6	14'-9"	
h33(E)	4	#4	6'-7"	
h34(E)	2	#4	7'-3"	
h35(E)	2	#5	10'-5"	
h36(E)	8	#6	13'-0"	
h37(E)	16	#6	14'-9"	
h38(E)	4	#4	5'-10"	
h39(E)	2	#4	6'-5"	
p30(E)	30	#7	26'-8"	
p31(E)	4	#4	28'-5"	
s30(E)	62	#6	14'-4"	
s31(E)	20	#5	4'-4"	
* sp30(E)	10	#4	2'-0"	
t30(E)	16	#4	5'-10"	
u30(E)	8	#6	11'-11"	
u31(E)	22	#4	6'-2"	
v30(E)	178	#8	5'-3"	
v31(E)	4	#5	8'-0"	
v32(E)	10	#5	11'-7"	
v33(E)	8	#4	7'-5"	
v34(E)	15	#4	13'-5"	
v35(E)	4	#5	7'-6"	
v36(E)	20	#5	11'-2"	
v37(E)	7	#4	7'-7"	
v38(E)	13	#4	13'-7"	
w30(E)	12	#4	6'-6"	
w31(E)	12	#4	5'-10"	
Concrete Structures		Cu. Yd.	42.4	
Reinforcement Bars, Epoxy Coated		Pound	8,200	
Furnishing Steel Piles HP 14x89		Foot	585	
Driving Piles		Foot	585	
Test Pile Steel HP 14x89		Each	1	
Pile Shoes		Each	10	

* Length is height of spiral.

MODEL: Default
FILE NAME: P:\10-IL11411-IDOT - Sacramento and Paulina over I-290\Work\CADD\Sacramento - Contract 62K65\CADD_Sheets\Structural\D162K65-016075-d027-N_abutment.dgn
10/13/2025 4:34:01 PM

COLLINS ENGINEERS INC.

USER NAME =	DESIGNED - MPR	REVISED -	
	CHECKED - EKM	REVISED -	
PLOT SCALE =	DRAWN - KGZ	REVISED -	
PLOT DATE =	CHECKED - EKM	REVISED -	

STATE OF ILLINOIS
DEPARTMENT OF TRANSPORTATION

NORTH ABUTMENT DETAILS
STRUCTURE NO. 016-0754
SHEET S-27 OF S-37 SHEETS

F.A.I. RTE.	SECTION	COUNTY	TOTAL SHEETS	SHEET NO.
290	2019-192-B-R	COOK	237	168
		CONTRACT NO. 62K65		
	ILLINOIS	FED. AID PROJECT NHPP-EW4T(947)		

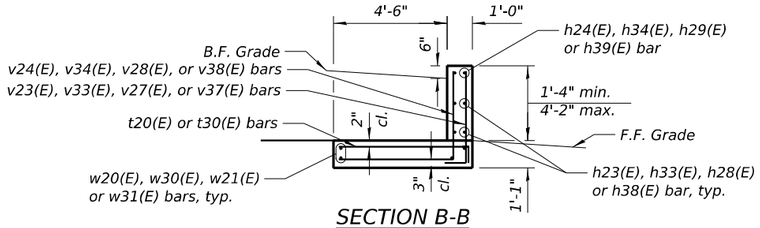

SECTION B-B

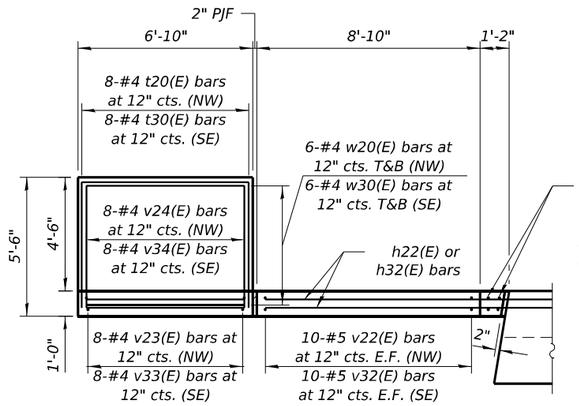

NW WINGWALL PLAN

(NW wingwall show. SE wingwall similar)

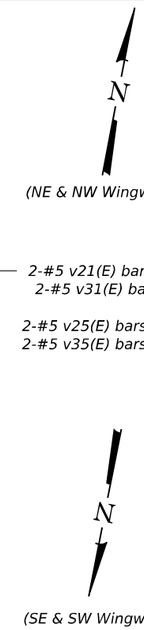

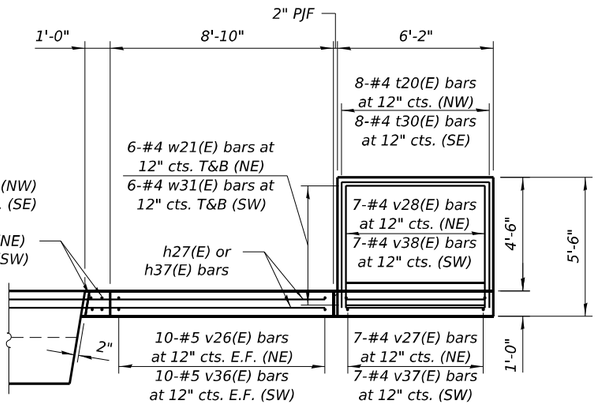

NE WINGWALL PLAN

(NE wingwall show. SW wingwall similar)

NW WINGWALL ELEVATION

(NW wingwall show. SE wingwall similar)

NE WINGWALL ELEVATION

(NE wingwall show. SW wingwall similar)

Notes:

1. *E.F. = Each Face*
2. *T&B = Top & Bottom*
3. *SE & SW Wingwalls included in South Abutment Bill of Materials. See Sheet S-26 for Bill of Materials, Bar Bending Diagrams, and Field Cutting Diagrams.*
4. *NE & NW Wingwalls included in North Abutment Bill of Materials. See Sheet S-27 for Bill of Materials, Bar Bending Diagrams, and Field Cutting Diagrams.*
5. *The wingwall extension footing maximum applied service bearing pressure (Qmax) = 5.5 ksf.*

MODEL: Default
FILE NAME: P:\10+LL\14411-IDOT - Sacramento and Paulina over I-290\Work\CADD\Sacramento - Contract 62K65\CADD_Sheets\Structural\D162K65-0160754-028-Wingwall details.dgn
10/13/2025 4:34:04 PM

COLLINS ENGINEERS INC.

USER NAME =	DESIGNED - MPR	REVISED -
	CHECKED - EKM	REVISED -
PLOT SCALE =	DRAWN - KGZ	REVISED -
PLOT DATE =	CHECKED - EKM	REVISED -

STATE OF ILLINOIS
DEPARTMENT OF TRANSPORTATION

WINGWALL DETAILS
STRUCTURE NO. 016-0754
SHEET S-28 OF S-37 SHEETS

F.A.I. RTE.	SECTION	COUNTY	TOTAL SHEETS	SHEET NO.
290	2019-192-B-R	COOK	237	169
		CONTRACT NO. 62K65		
	ILLINOIS	FED. AID PROJECT NHPP-EW4T(947)		

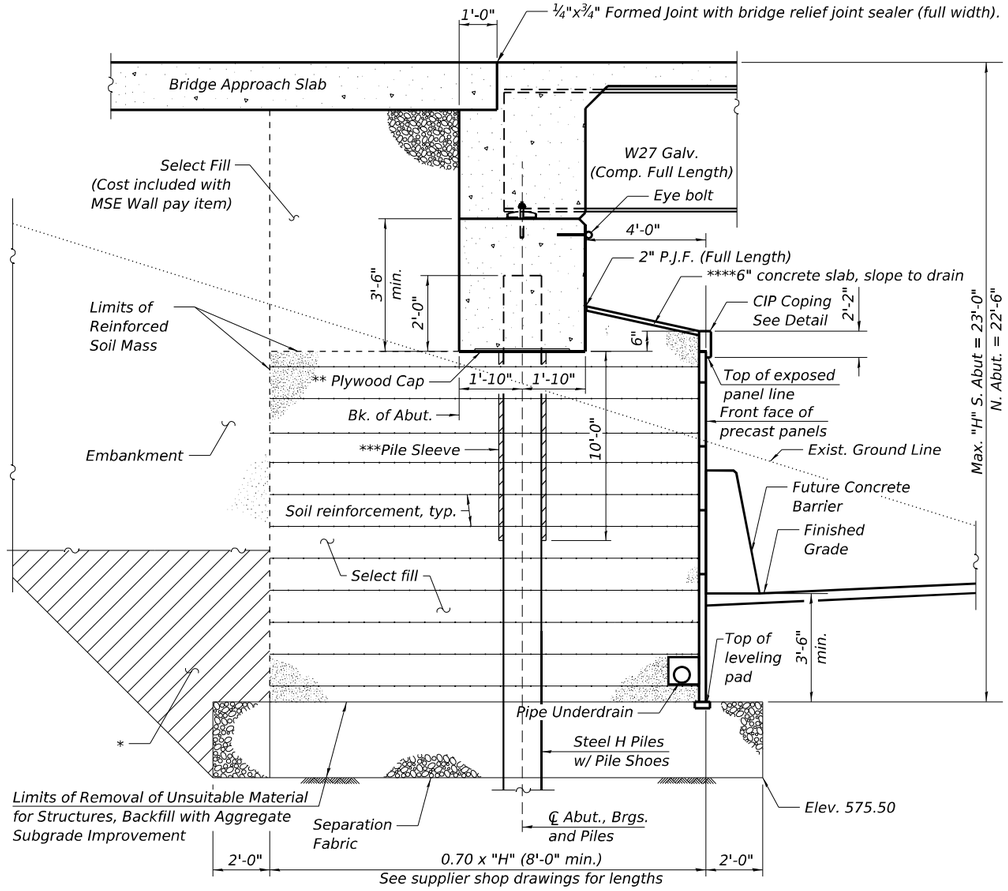

M.S.E. WALL SECTION AT INTEGRAL ABUTMENT

(Horiz. dim. at Rt. ∠'s)

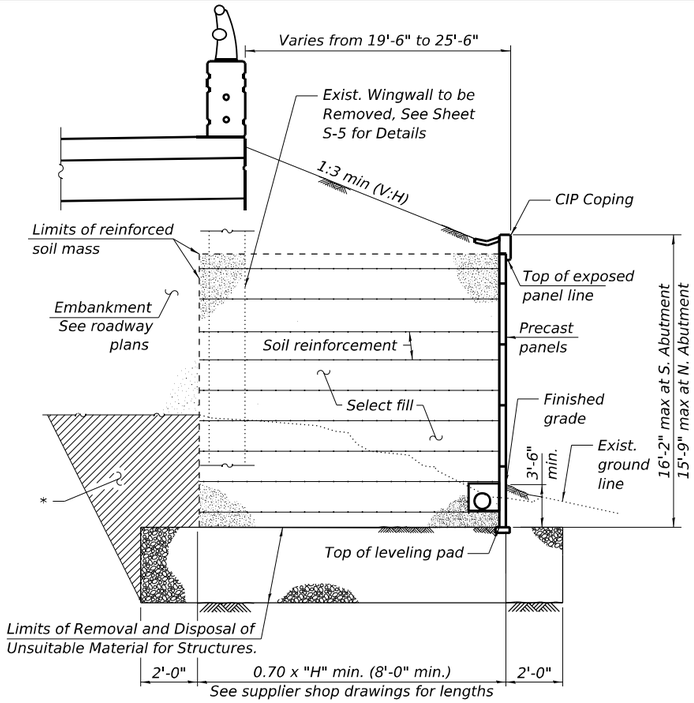

SECTION THRU MSE WALL

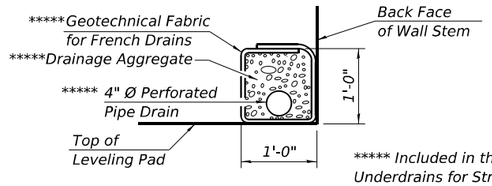

***** Included in the cost of "Pipe Underdrains for Structures."

PIPE UNDERDRAIN DETAIL

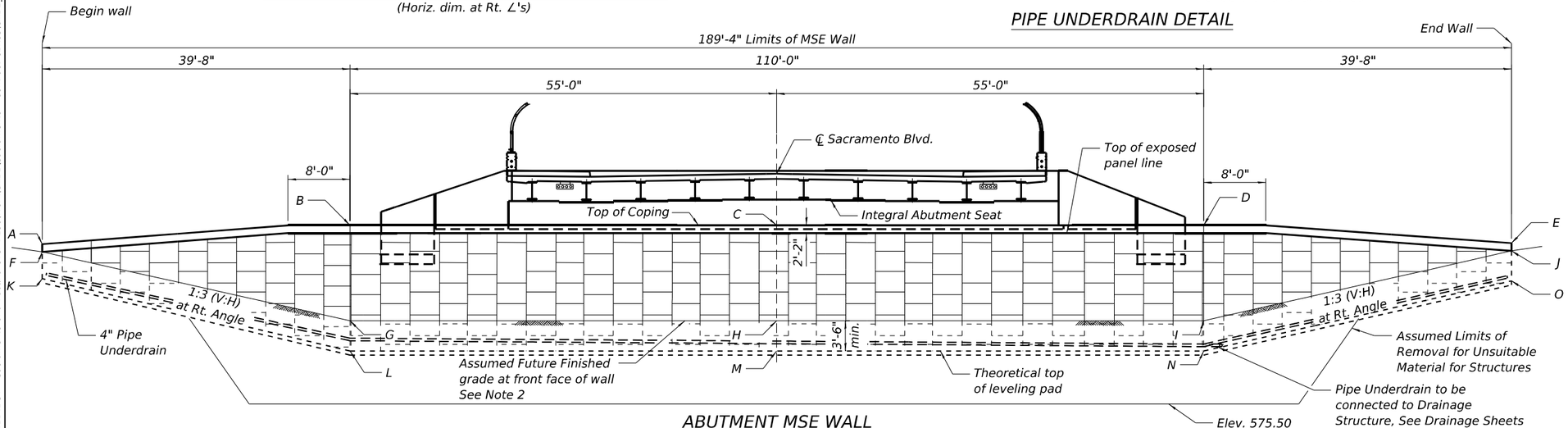

ABUTMENT MSE WALL

(Unfolded elevation along front face of wall)
(South Abutment - Looking South) (North Abutment - Looking North)

* Overexcavation beyond Structure Excavation and Removal of Unsuitable Material for Structures. This area not measured for payment. Backfill overexcavation with same material used for select fill used in MSE wall.

** Bottom of cap poured against top of plywood. Cut opening to match pile perimeter within ⅛". Support with bars tack welded to webs rated for 500 lbs. Seal gaps to keep concrete out. Cost included with Furnishing Steel Piles HP 14x89.

*** Sleeve to remain empty in hatched region.

**** Cost included with Mechanically Stabilized Earth Retaining Wall

SOUTH ABUTMENT

Point	Station	Offset	Elev.
A	6+70.07	60.74	592.33
B	7+09.20	54.24	592.65
C	7+00.23	0.00	592.65
D	6+91.25	-54.24	592.65
E	6+52.12	-60.74	591.61
F	6+70.07	60.74	590.16
G	7+09.20	54.24	580.00
H	7+00.23	0.00	580.00
I	6+91.25	-54.24	580.00
J	6+52.12	-60.74	589.44
K	6+70.07	60.74	586.66
L	7+09.20	54.24	576.50
M	7+00.23	0.00	576.50
N	6+91.25	-54.24	576.50
O	6+52.12	-60.74	585.94

NORTH ABUTMENT

Point	Station	Offset	Elev.
A	9+63.39	-60.77	592.32
B	9+24.51	-54.24	592.57
C	9+33.49	0.00	592.57
D	9+42.46	54.24	592.57
E	9+81.59	60.70	591.62
F	9+63.39	-60.77	590.16
G	9+24.51	-54.24	580.30
H	9+33.49	0.00	580.30
I	9+42.46	54.24	580.30
J	9+81.59	60.70	589.45
K	9+63.39	-60.77	586.66
L	9+24.51	-54.24	576.80
M	9+33.49	0.00	576.80
N	9+42.46	54.24	576.80
O	9+81.59	60.70	585.95

Note:

1. The MSE wall offsets are measured perpendicular to centerline of Sacramento Avenue, to the front face of the precast panels.
2. Assumed future shoulder elevation at the abutments was calculated using existing survey elevations at the edge of pavement and assuming 2% slope for future lane and 6% max. for future shoulder.
3. See Sheet S-4 for MSE Wall Layout.
4. Cost of Separation Fabric is included in the cost of Aggregate Subgrade Improvement.
5. The limits and quantities of removal and replacement of Unsuitable Material for Structures shown are based on the boring data and may be modified by the District Geotechnical and Fleld Engineers for variable subsuface conditions encountered in the field.
6. Concrete Sealer to be applied to front face of the MSE wall.
7. Cost of PJF and concrete coping are included in payment for Mechanically Stabilized Earth Retaining Wall.

BILL OF MATERIAL

ITEM	UNIT	QUANTITY
Aggregate Subgrade Improvement	Cu. Yd.	250
Structure Excavation	Cu. Yd.	3,809
Removal and Disposal of Unsuitable Material for Structures	Cu. Yd.	250
Mechanically Stabilized Earth Retaining Wall	Sq. Ft.	4,357
Concrete Sealer	Sq. Ft.	3,052
Pipe Underdrain for Structures 4"	Foot	388

MODEL: Default
FILE NAME: P:\10-IL\14411-IDOT - Sacramento and Paulina over I-290\Work\CADD\Sacramento - Contract 62K65\CADD_Sheets\Structural\D162K65-0160754-029-MSE details 1.dgn
10/13/2025 4:34:06 PM

COLLINS ENGINEERS INC.

USER NAME =	DESIGNED - MPR	REVISED -	
	CHECKED - EKM	REVISED -	
PLOT SCALE =	DRAWN - KGZ	REVISED -	
PLOT DATE =	CHECKED - EKM	REVISED -	

STATE OF ILLINOIS
DEPARTMENT OF TRANSPORTATION

MSE WALL DETAILS I
STRUCTURE NO. 016-0754
SHEET S-29 OF S-37 SHEETS

F.A.I. RTE.	SECTION	COUNTY	TOTAL SHEETS	SHEET NO.
290	2019-192-B-R	COOK	237	170
		CONTRACT NO. 62K65		
	ILLINOIS	FED. AID PROJECT NHPP-EW4T(947)		

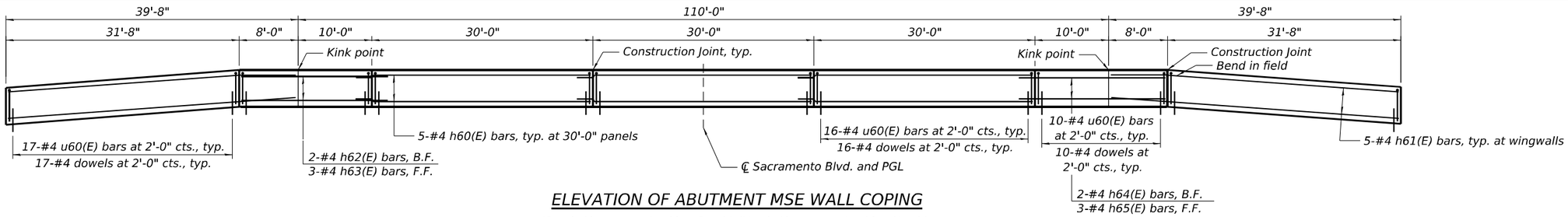

ELEVATION OF ABUTMENT MSE WALL COPING

(South Abutment - Looking South) (North Abutment - Looking North)

MINIMUM BAR LAPS

#4 = 2'-2"

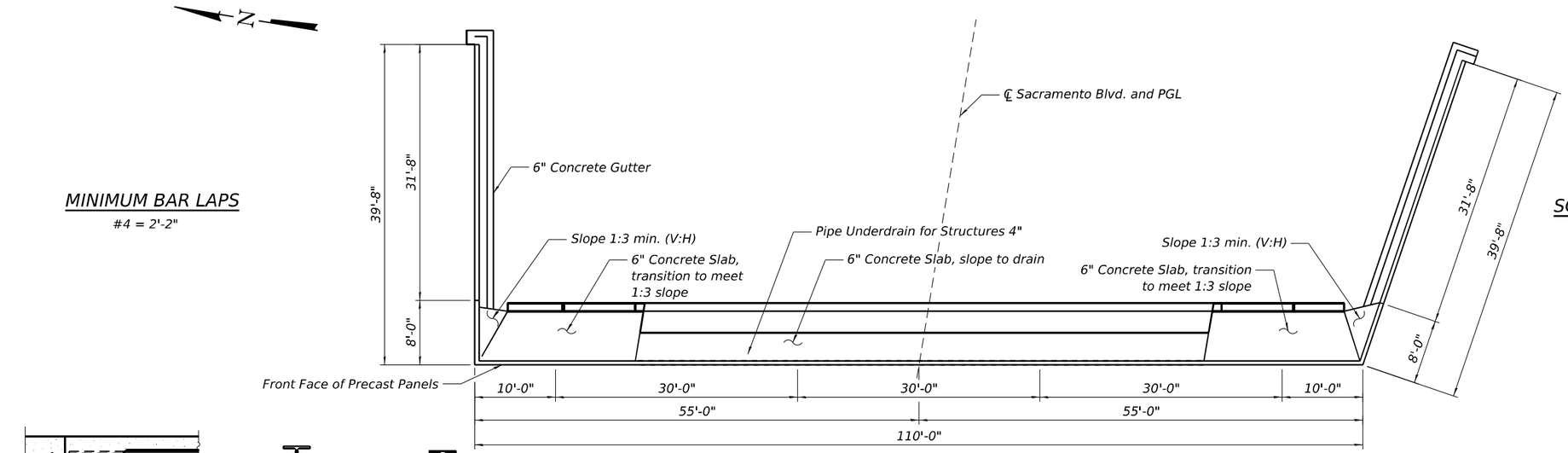

NORTH ABUTMENT MSE WALL PLAN

(North Abutment MSE Wall shown, South Abutment MSE Wall similar)

** BAR LIST
SOUTH ABUTMENT MSE WALL COPING

Bar	No.	Size	Length	Shape
h60(E)	15	#4	32'-0"	
h61(E)	10	#4	39'-4"	
h62(E)	2	#4	16'-11"	
h63(E)	3	#4	17'-4"	
h64(E)	2	#4	19'-7"	
h65(E)	3	#4	19'-8"	
u60(E)	102	#4	3'-10"	

** For information only

** BAR LIST
NORTH ABUTMENT MSE WALL COPING

Bar	No.	Size	Length	Shape
h60(E)	15	#4	32'-0"	
h61(E)	10	#4	39'-4"	
h62(E)	2	#4	16'-11"	
h63(E)	3	#4	17'-4"	
h64(E)	2	#4	19'-7"	
h65(E)	3	#4	19'-8"	
u60(E)	102	#4	3'-10"	

**For information only

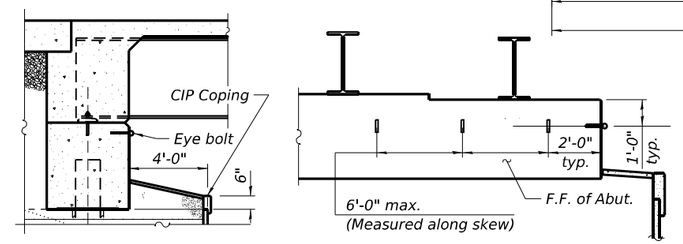

PARTIAL ELEVATION OF F.F. ABUTMENT SHOWING EYE BOLT FALL PROTECTION OPTION

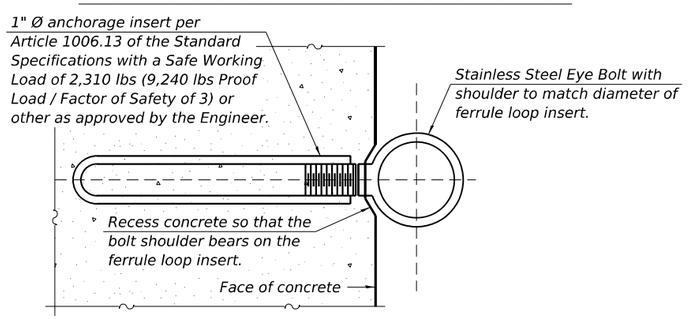

EYE BOLT DETAIL

(Cost included with Concrete Structures)

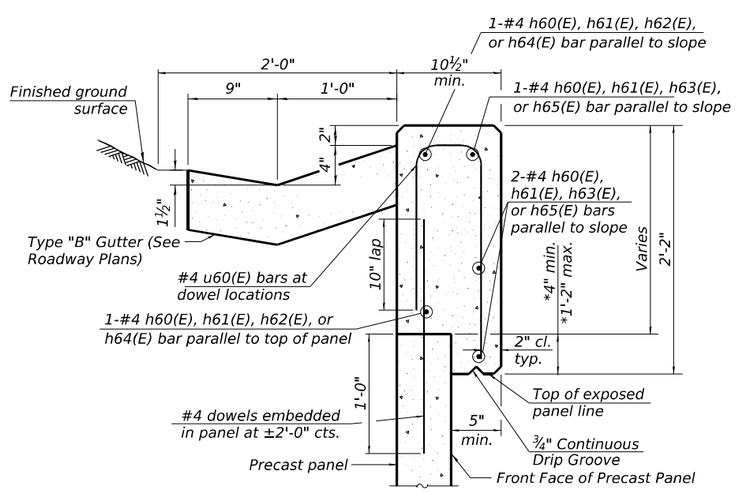

COPING DETAIL

* Limits of Bond breaker membrane between front of panel and overhang.

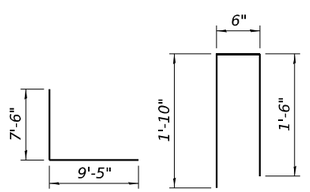

BAR h62(E) BAR u60(E)

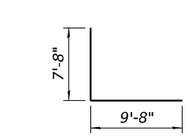

BAR h63(E)

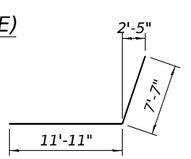

BAR h64(E)

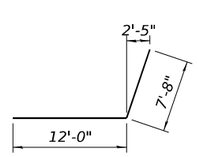

BAR h65(E)

Notes:

The cost of concrete slab, concrete coping, reinforcement bars, and dowel bars are included in the cost of "Mechanically Stabilized Earth Retaining Wall."

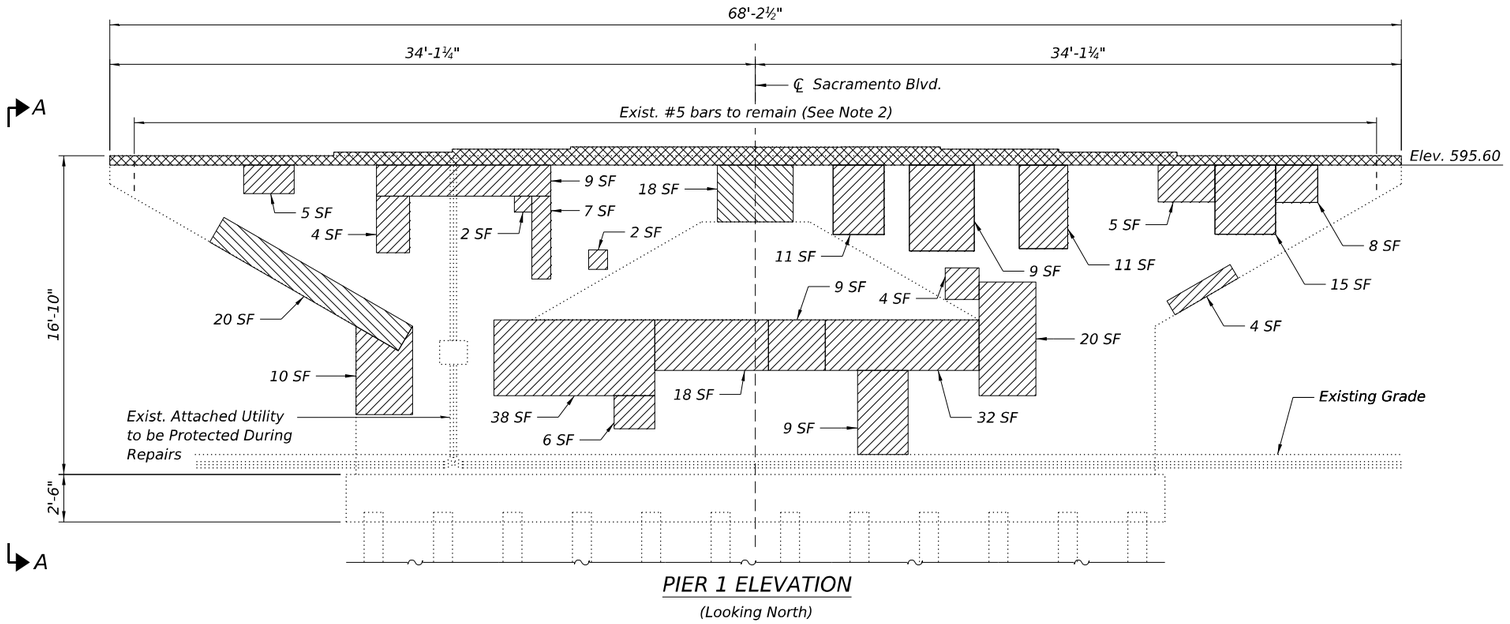

PIER 1 ELEVATION

(Looking North)

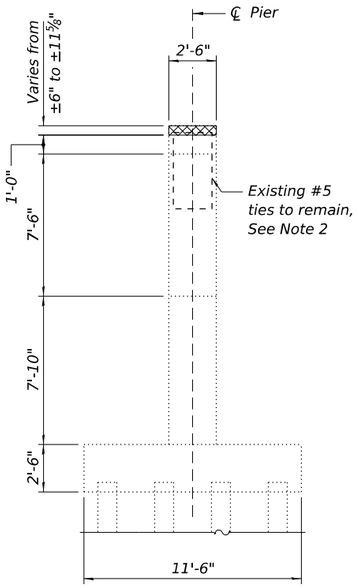

SECTION A-A

NOTES:

1. *Repair areas are estimated based on inspection completed in 2023 and increased by 10% to account for future deterioration. Actual repair areas and locations shall be determined by the Engineer at the time of construction and shown as as-built plans.*
2. *Existing reinforcement shall be cleaned, straightened, and incorporated into the new construction. Cost included with "Concrete Removal".*
3. *Any reinforcement bars to remain that are damaged during concrete removal operations shall be repaired or replaced using an approved bar splicer or anchorage system. Cost included with "Concrete Removal".*
4. *Repairs are to be performed after removal of existing superstructure elements and associated bearings.*
5. *For Proposed Pier 1 Cap modifications, see Sheet S-32.*
6. *An estimated amount of Graffiti Removal has been included; however, an exact quantity and location of Graffiti Removal shall be per the Engineer in the field.*

BILL OF MATERIAL

ITEM	UNIT	TOTAL
Concrete Removal	Cu. Yd.	4.9
Epoxy Crack Injection	Ft.	11
Graffiti Removal	Sq. Yd.	35
Structural Repair of Concrete (Depth equal to or less than 5")	Sq. Ft.	341
Structural Repair of Concrete (Depth greater than 5")	Sq. Ft.	38

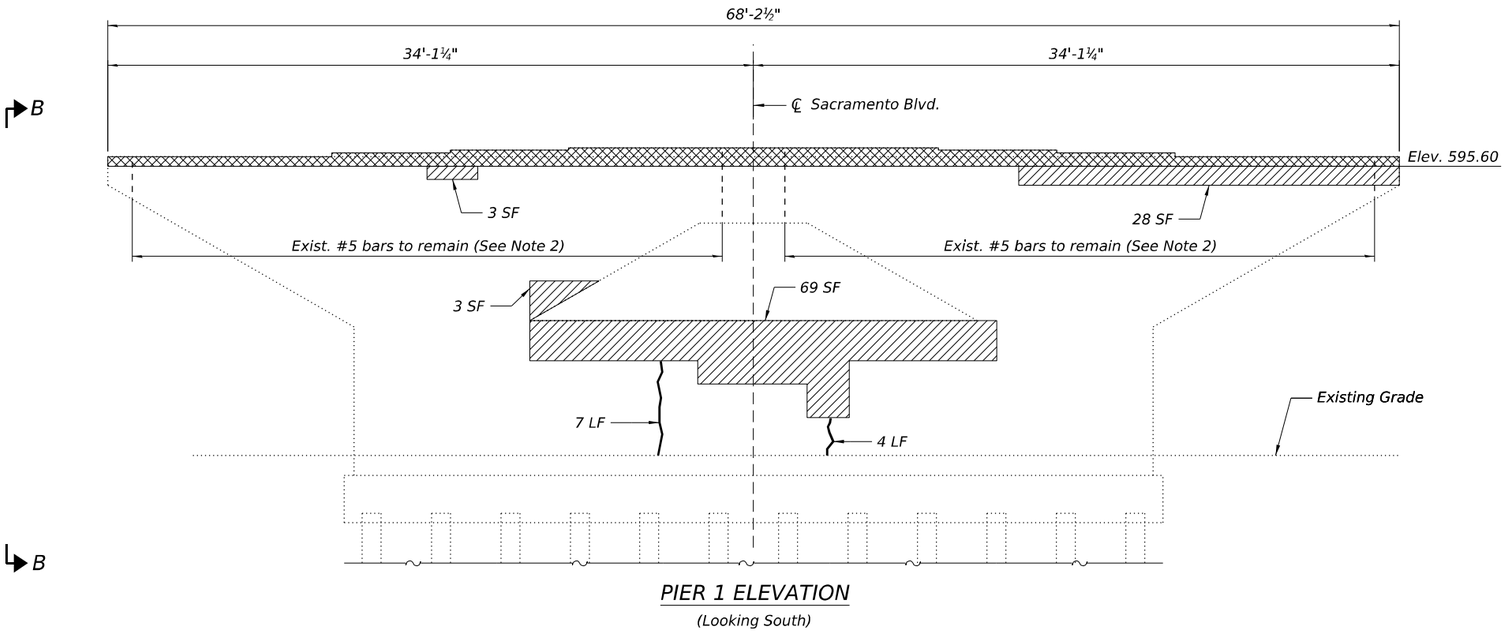

PIER 1 ELEVATION

(Looking South)

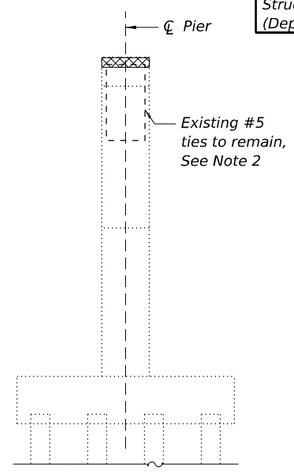

SECTION B-B

LEGEND:

- Concrete Removal
- Structural Repair of Concrete (Depth Equal to or Less Than 5")
- Structural Repair of Concrete (Depth Greater Than 5")
- Epoxy Crack Injection
- SF — Square Foot
- LF — Linear Foot

MODEL: Default
FILE NAME: P:\10-LI\14411-IDOT - Sacramento and Paulina over I-290\Work\CADD\Sacramento - Contract 62K65\CADD_Sheets\Structural\D162K65-016075-4-031-pier1_repairs.dgn
10/13/2025 4:34:10 PM

COLLINS ENGINEERS INC.

USER NAME =	DESIGNED - MPR	REVISED -
	CHECKED - EKM	REVISED -
PLOT SCALE =	DRAWN - KGZ	REVISED -
PLOT DATE =	CHECKED - EKM	REVISED -

STATE OF ILLINOIS
DEPARTMENT OF TRANSPORTATION

PIER 1 REPAIRS
STRUCTURE NO. 016-0754
SHEET S-31 OF S-37 SHEETS

F.A.I. RTE.	SECTION	COUNTY	TOTAL SHEETS	SHEET NO.
290	2019-192-B-R	COOK	237	172
		CONTRACT NO. 62K65		
	ILLINOIS	FED. AID PROJECT NHPP-EW4T(947)		

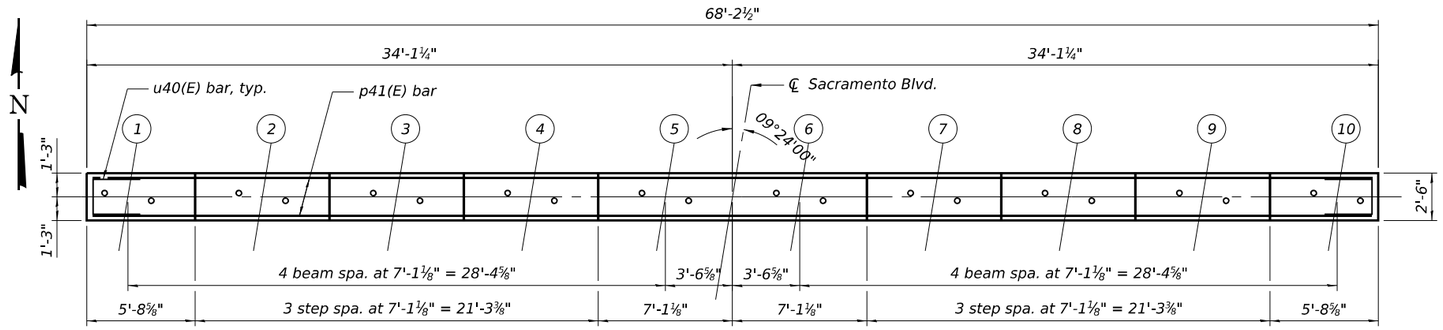

PIER 1 PLAN

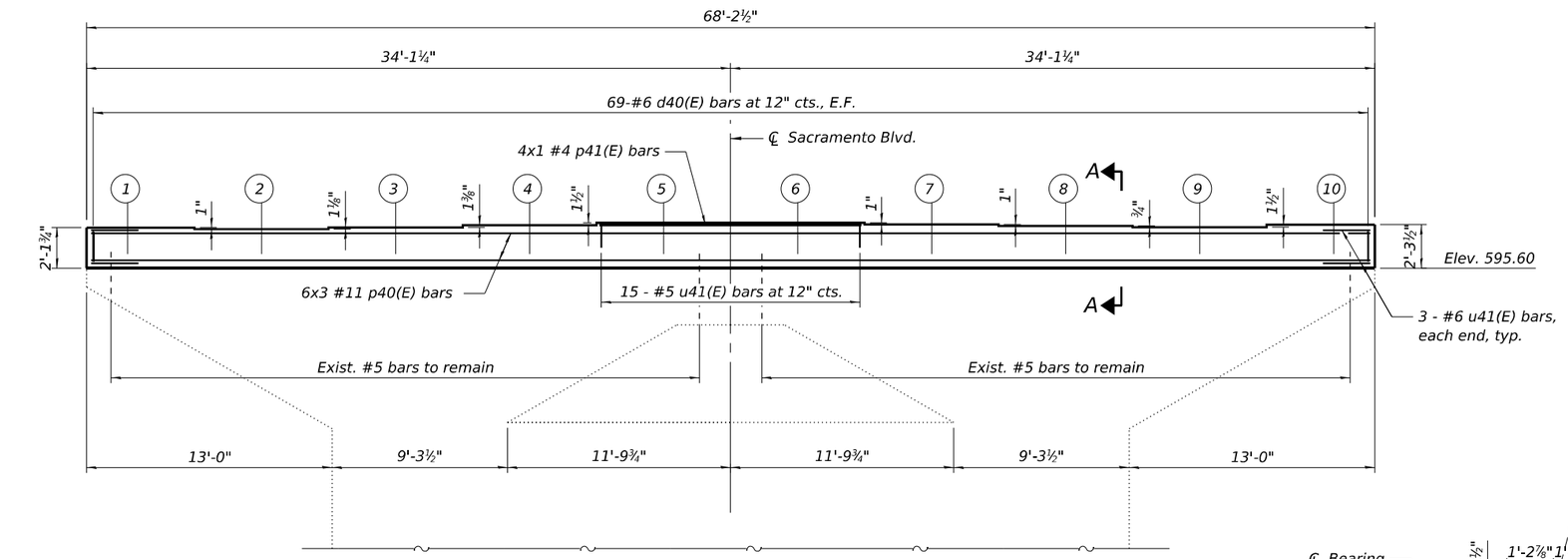

PIER 1 ELEVATION

(Looking North)

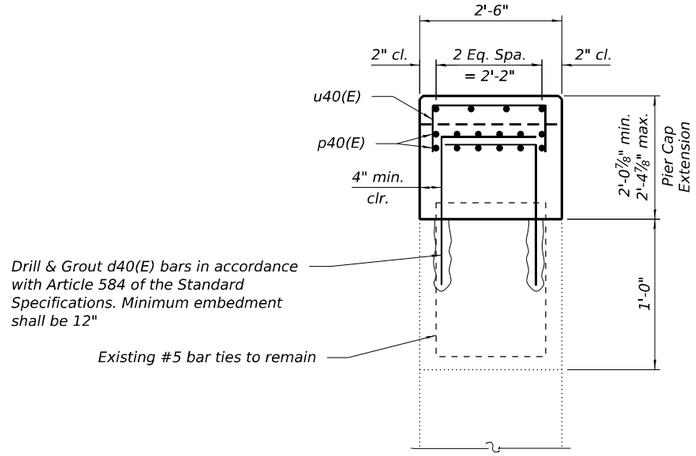

SECTION A-A

MINIMUM BAR LAP

#11 bar = 10'-1"

BILL OF MATERIAL

Bar	No.	Size	Length	Shape
d40(E)	138	#6	4'-10"	⌐
p40(E)	36	#11	29'-5"	——
p41(E)	4	#5	13'-10"	——
u40(E)	6	#6	8'-2"	⊓
u41(E)	15	#5	4'-10"	⊓
Concrete Structures			Cu. Yd.	14.3
Reinforcement Bars, Epoxy Coated			Pound	6,860
Concrete Sealer			Sq. Ft.	397

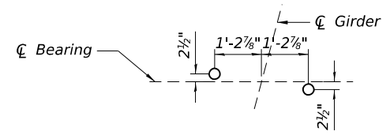

ANCHOR BOLT PLAN

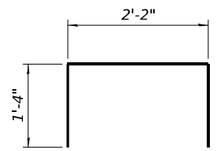

BAR u40(E)

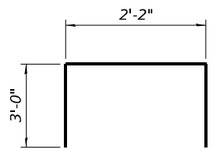

BAR u41(E)

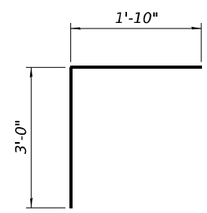

BAR d40(E)

TOP OF SEAT ELEVATIONS

Beam No.	Seat Elev.
Beam 1	597.75
Beam 2	597.67
Beam 3	597.77
Beam 4	597.89
Beam 5	598.01
Beam 6	598.01
Beam 7	597.93
Beam 8	597.84
Beam 9	597.77
Beam 10	597.89

NOTES:

1. For Pier 1 Removal and Repairs, see Sheet S-31.
2. Existing reinforcement shall be cleaned, straightened, and incorporated into the new construction. Cost included with Concrete Removal.
3. See General Notes on Sheet S-2 for limits of Concrete Sealer application.
4. Bars indicated thus 1 x 2-#8 etc. indicates 1 line of bars with 2 lengths per line.

MODEL: Default
FILE NAME: P:\10-LL14411-IDOT - Sacramento and Paulina over I-290\Work\CADD\Sacramento - Contract 62K65\CADD_Sheets\Structural\D162K65-0160754-032-pier1_cap conc ext.dgn
10/13/2025 4:34:12 PM

COLLINS ENGINEERS INC.

USER NAME =	DESIGNED - MPR	REVISED -
	CHECKED - EKM	REVISED -
PLOT SCALE =	DRAWN - KGZ	REVISED -
PLOT DATE =	CHECKED - EKM	REVISED -

STATE OF ILLINOIS
DEPARTMENT OF TRANSPORTATION

PIER 1 CAP CONCRETE EXTENSION
STRUCTURE NO. 016-0754
SHEET S-32 OF S-37 SHEETS

F.A.I. RTE.	SECTION	COUNTY	TOTAL SHEETS	SHEET NO.
290	2019-192-B-R	COOK	237	173
		CONTRACT NO. 62K65		
	ILLINOIS	FED. AID PROJECT NHPP-EW4T(947)		

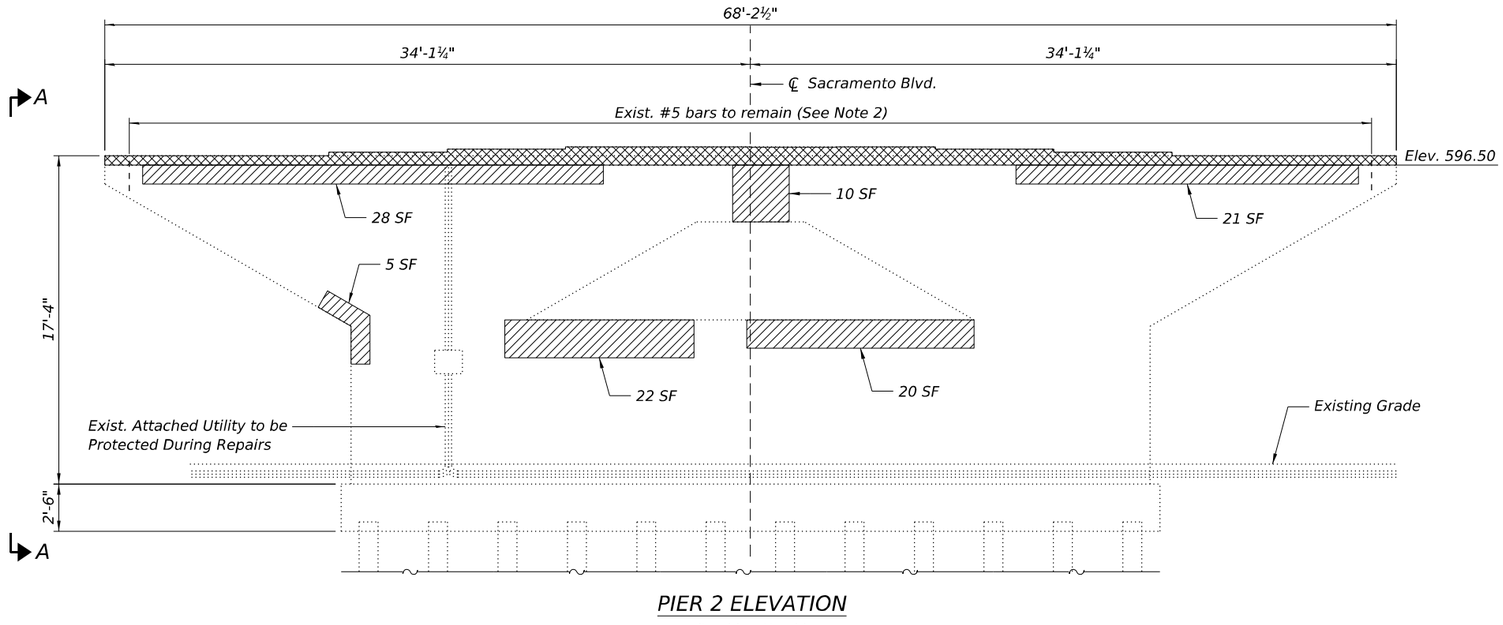

PIER 2 ELEVATION

(Looking North)

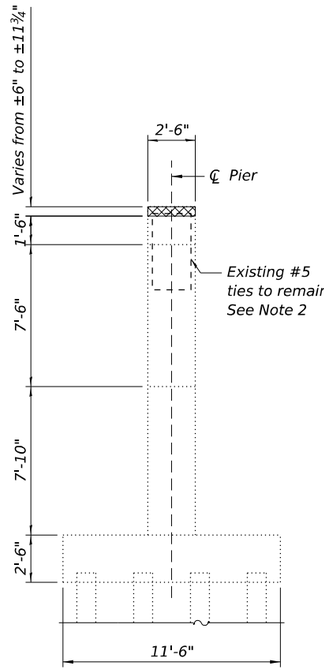

SECTION A-A

NOTES:

1. *Repair areas are estimated based on inspection completed in 2023 and increased by 10% to account for future deterioration. Actual repair areas and locations shall be determined by the Engineer at the time of construction and shown as as-built plans.*
2. *Existing reinforcement shall be cleaned, straightened, and incorporated into the new construction. Cost included with "Concrete Removal".*
3. *Any reinforcement bars to remain that are damaged during concrete removal operations shall be repaired or replaced using an approved bar splicer or anchorage system. Cost included with "Concrete Removal".*
4. *Repairs are to be performed after removal of existing superstructure elements and associated bearings.*
5. *For Proposed Pier 2 Cap modifications, see Sheet S-34.*
6. *An estimated amount of Graffiti Removal has been included; however, an exact quantity and location of Graffiti Removal shall be per the Engineer in the field.*

BILL OF MATERIAL

ITEM	UNIT	TOTAL
Concrete Removal	Cu. Yd.	5.0
Epoxy Crack Injection	Ft.	8
Graffiti Removal	Sq. Yd.	37
Structural Repair of Concrete (Depth equal to or less than 5")	Sq. Ft.	320
Structural Repair of Concrete (Depth greater than 5")	Sq. Ft.	6

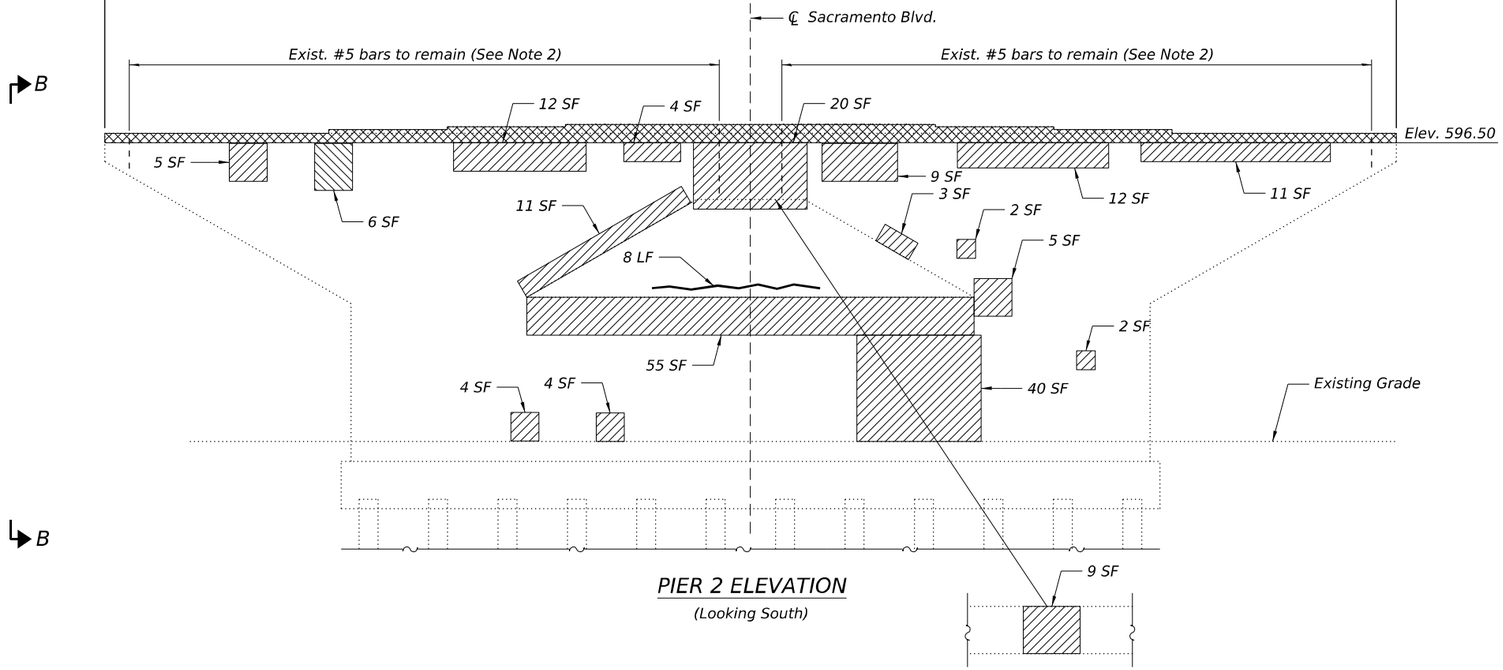

PIER 2 ELEVATION

(Looking South)

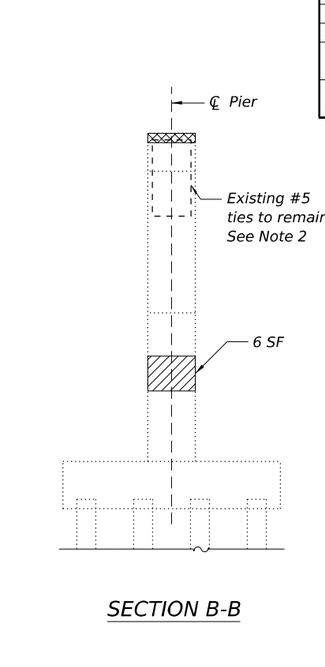

SECTION B-B

LEGEND:

	Concrete Removal
	Structural Repair of Concrete (Depth Equal to or Less than 5")
	Structural Repair of Concrete (Depth Greater Than 5")
	Epoxy Crack Injection
SF	Square Foot
LF	Linear Foot

MODEL: Default
FILE NAME: P:\10-LL14411-IDOT - Sacramento and Paulina over I-290\Work\CADD\Sacramento - Contract 62K65\CADD_Sheets\StructuralD162K65-016075-033-pier2_repairs.dgn
10/13/2025 4:34:15 PM

COLLINS ENGINEERS INC.

USER NAME =	DESIGNED - MPR	REVISED -	
	CHECKED - EKM	REVISED -	
PLOT SCALE =	DRAWN - KGZ	REVISED -	
PLOT DATE =	CHECKED - EKM	REVISED -	

STATE OF ILLINOIS
DEPARTMENT OF TRANSPORTATION

PIER 2 REPAIRS
STRUCTURE NO. 016-0754
SHEET S-33 OF S-37 SHEETS

F.A.I. RTE.	SECTION	COUNTY	TOTAL SHEETS	SHEET NO.
290	2019-192-B-R	COOK	237	174
		CONTRACT NO. 62K65		
	ILLINOIS	FED. AID PROJECT NHPP-EW4T(947)		

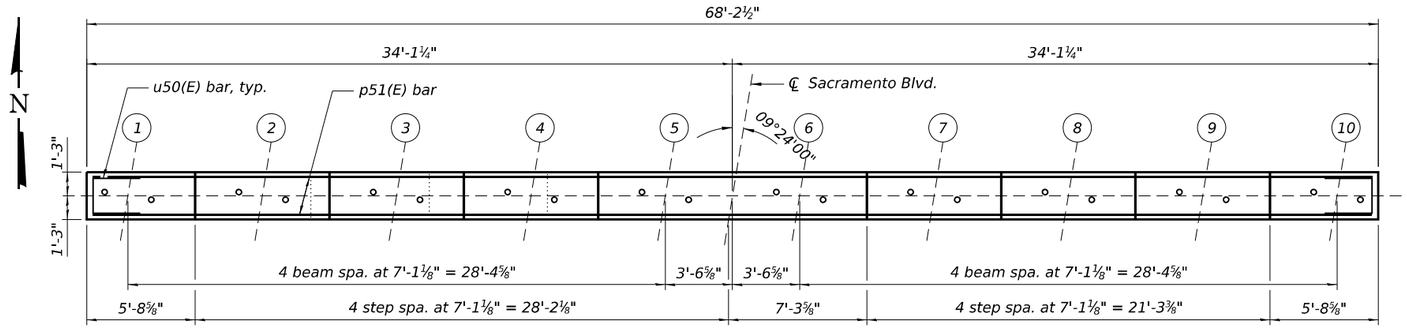

PIER 2 PLAN

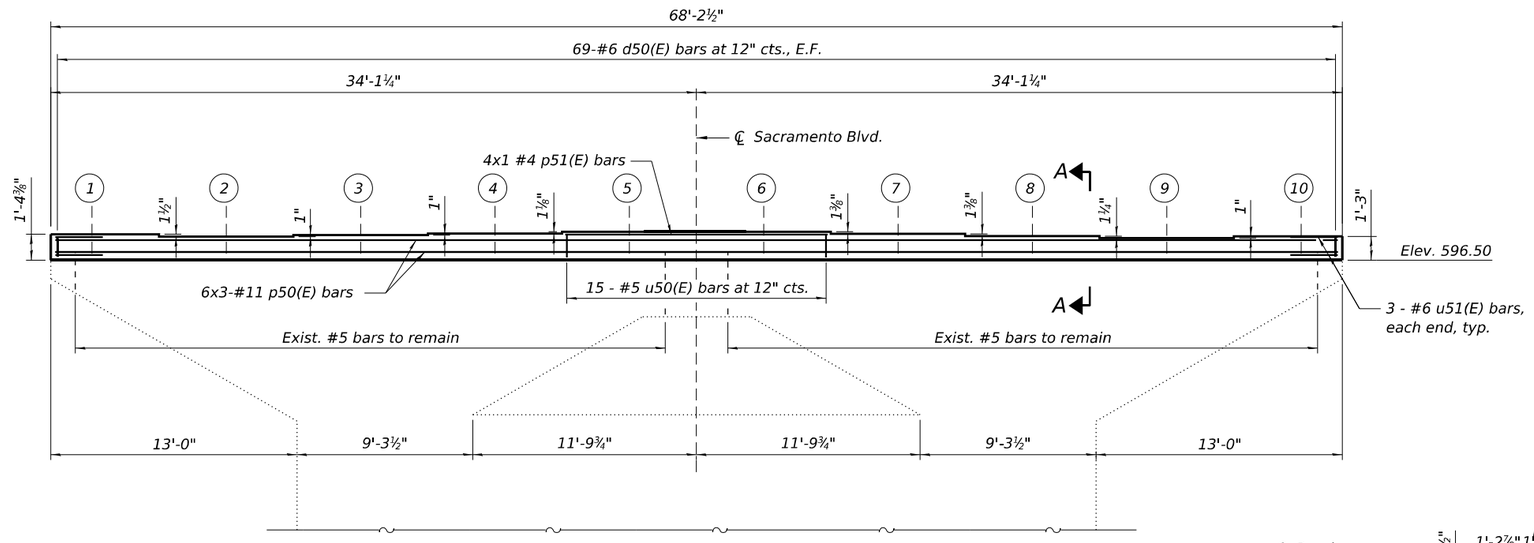

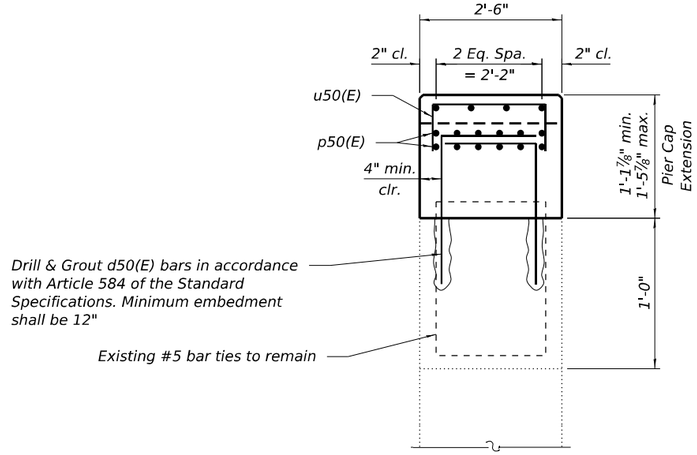

SECTION A-A

MINIMUM BAR LAP

#11 bar = 10'-1"

BILL OF MATERIAL

Bar	No.	Size	Length	Shape
d50(E)	138	#6	3'-11"	⌐
p50(E)	36	#11	29'-5"	———
p51(E)	4	#5	13'-10"	———
u50(E)	6	#5	8'-2"	⊓
u51(E)	15	#6	4'-10"	⊓
Concrete Structures			Cu. Yd.	8.5
Reinforcement Bars, Epoxy Coated			Pound	6,650
Concrete Sealer			Sq. Ft.	337

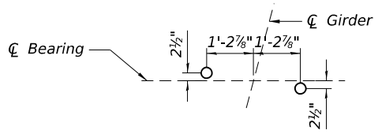

ANCHOR BOLT PLAN

PIER 2 ELEVATION

(Looking North)

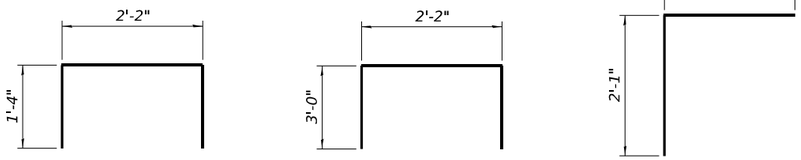

BAR u50(E)

BAR u51(E)

BAR d50(E)

TOP OF SEAT ELEVATIONS

Beam No.	Seat Elev.
Beam 1	597.87
Beam 2	597.74
Beam 3	597.82
Beam 4	597.90
Beam 5	597.99
Beam 6	597.99
Beam 7	597.88
Beam 8	597.76
Beam 9	597.66
Beam 10	597.75

NOTES:

1. For Pier 2 Removal and Repairs, see Sheet S-33.
2. Existing reinforcement shall be cleaned, straightened, and incorporated into the new construction. Cost included with Concrete Removal.
3. See General Notes on Sheet S-2 for limits of Concrete Sealer application.
4. Bars indicated thus 1 x 2-#8 etc. indicates 1 line of bars with 2 lengths per line.

MODEL: Default
FILE NAME: P:\10-IL\14411-IDOT - Sacramento and Paulina over I-290\Work\CADD\Sacramento - Contract 62K65\CADD_Sheets\Structural\D162K65-0160754-034-pier2_cap conc ext.dgn
10/13/2025 4:34:18 PM

COLLINS ENGINEERS INC.

USER NAME =	DESIGNED - MPR	REVISED -
	CHECKED - EKM	REVISED -
PLOT SCALE =	DRAWN - KGZ	REVISED -
PLOT DATE =	CHECKED - EKM	REVISED -

STATE OF ILLINOIS
DEPARTMENT OF TRANSPORTATION

PIER 2 CAP CONCRETE EXTENSION
STRUCTURE NO. 016-0754
SHEET S-34 OF S-37 SHEETS

F.A.I. RTE.	SECTION	COUNTY	TOTAL SHEETS	SHEET NO.
290	2019-192-B-R	COOK	237	175
		CONTRACT NO. 62K65		
	ILLINOIS	FED. AID PROJECT NHPP-EW4T(947)		

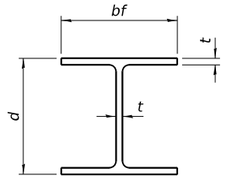

STEEL PILE TABLE

Designation	Depth d	Flange width bf	Web and Flange thickness t	Encasement diameter A
HP 18x181	18	18	1	36"
x157	17¾"	17⅞"	⅞"	36"
x135	17½"	17¾"	¾"	36"
HP 16x183	16½"	16½"	1⅛"	36"
x162	16¼"	16⅛"	1"	36"
x141	16	16	⅞"	36"
x121	15¾"	15⅞"	¾"	36"
HP 14x117	14¼"	14⅞"	13/16"	30"
x102	14"	14¾"	11/16"	30"
x89	13⅞"	14¾"	⅝"	30"
x73	13⅝"	14⅝"	½"	30"
HP 12x84	12¼"	12¼"	11/16"	24"
x74	12⅛"	12¼"	⅝"	24"
x63	12"	12⅛"	½"	24"
x53	11¾"	12"	7/16"	24"
HP 10x57	10"	10¼"	9/16"	24"
x42	9¾"	10⅛"	7/16"	24"
HP 8x36	8"	8⅛"	7/16"	18"

ELEVATION

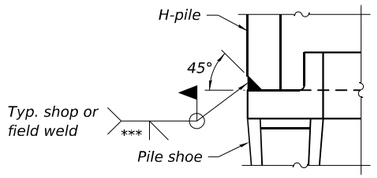

DETAIL A

SHOE ATTACHMENT

Note:
The steel H-piles shall be according to AASHTO M270 Grade 50.

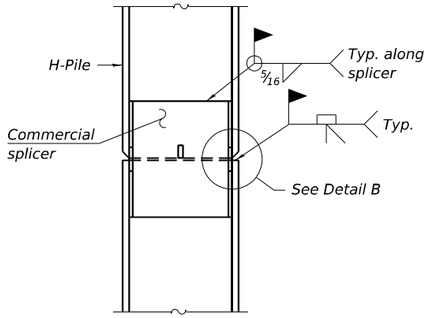

ELEVATION

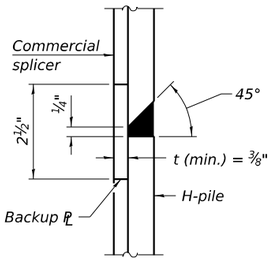

DETAIL B

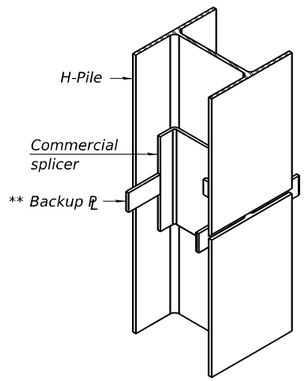

ISOMETRIC VIEW

WELDED COMMERCIAL SPLICE

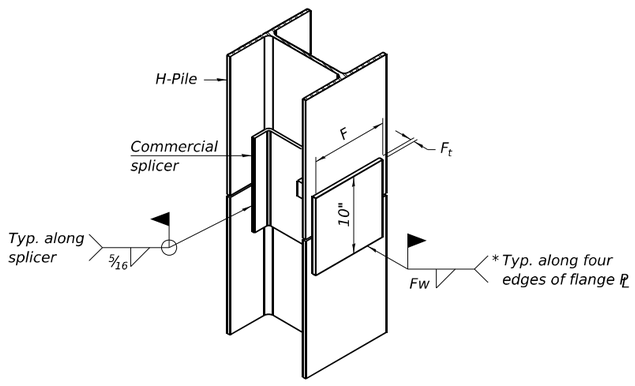

ISOMETRIC VIEW

WELDED COMMERCIAL SPLICE ALTERNATE

* Interrupt welds ¼" from end of web and/or each flange.

** Remove portions of backup PL's that extend outside the flanges.

*** Weld size per pile shoe manufacturer (5/16" min.).

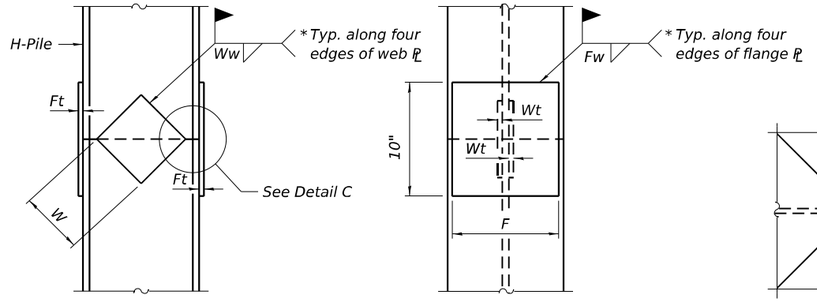

ELEVATION

END VIEW

DETAIL C

Designation	F	Ft	Fw	W	Wt	Ww
HP 18x181	15½"	1½"	1"	9½"	⅞"	¾"
x157	15¼"	1¼"	1"	9½"	⅞"	¾"
x135	15¼"	1¼"	1"	9½"	⅞"	¾"
HP 16x183	13¾"	1½"	1"	8¼"	⅞"	¾"
x162	13½"	1½"	1"	8¼"	¾"	⅝"
x141	13½"	1¼"	⅞"	8¼"	¾"	⅝"
x121	13½"	1¼"	⅞"	8¼"	¾"	⅝"
HP 14x117	12½"	1¼"	⅞"	7¾"	⅝"	½"
x102	12½"	1"	¾"	7¾"	⅝"	½"
x89	12½"	⅞"	11/16"	7¾"	⅝"	½"
x73	12½"	¾"	9/16"	7¾"	⅝"	½"
HP 12x84	10"	1"	11/16"	6½"	⅝"	½"
x74	10"	⅞"	11/16"	6½"	⅝"	½"
x63	10"	¾"	½"	6½"	½"	⅜"
x53	10"	¾"	½"	6½"	½"	⅜"
HP 10x57	8"	⅞"	9/16"	5¼"	½"	⅜"
x42	8"	¾"	9/16"	5¼"	½"	⅜"
HP 8x36	6¾"	⅝"	7/16"	4"	½"	⅜"

WELDED PLATE FIELD SPLICE

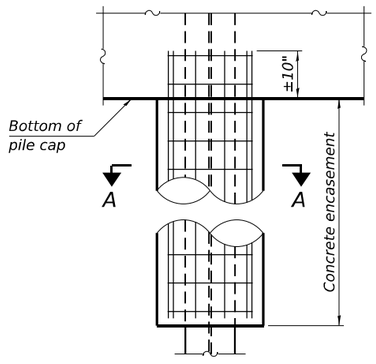

ELEVATION

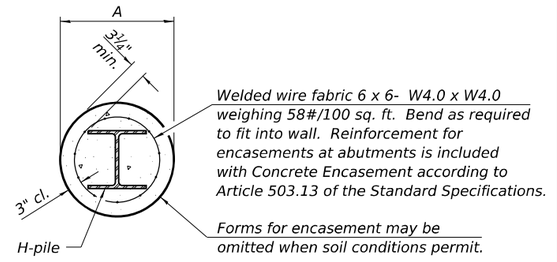

SECTION A-A

INDIVIDUAL PILE CONCRETE ENCASEMENT

(when specified)

F-HP 4-4-2025

COLLINS ENGINEERS INC.	USER NAME =	DESIGNED - MPR	REVISED -
		CHECKED - EKM	REVISED -
	PLOT SCALE =	DRAWN - KGZ	REVISED -
	PLOT DATE =	CHECKED - EKM	REVISED -

STATE OF ILLINOIS
DEPARTMENT OF TRANSPORTATION

HP PILE DETAILS
STRUCTURE NO. 016-0754
SHEET S-35 OF S-37 SHEETS

F.A.I. RTE.	SECTION	COUNTY	TOTAL SHEETS	SHEET NO.
290	2019-192-B-R	COOK	237	176
		CONTRACT NO. 62K65		
	ILLINOIS	FED. AID PROJECT NHPP-EW4T(947)		

MODEL: Default
FILE NAME: P:\10dli\1441-IDOT - Sacramento and Paulina over I-290\Work\CADD\Sacramento - Contract 62K65\CADD_Sheets\Structural\D162K65-0160754-035-hp_piles.dgn
10/13/2025 4:34:20 PM

Wang Engineering
wangeng@wangeng.com
1145 N Main Street
Lombard, IL 60148
Telephone: (630) 953-9928
Fax:

BORING LOG SAC-01

WEI Job No.: KE235325

Client: Collins Engineers
Project: Paulina Street and Sacramento Blvd over Interstate 290
Location: Chicago, Cook County, IL

Datum: NAVD88
Elevation: 598.46 ft
North: 1897929.76 ft
East: 1156416.89 ft
Station:
Offset:

Profile	Elevation (ft)	SOIL AND ROCK DESCRIPTION	Depth (ft)	Sample Type / recovery	Sample No.	SPT (blw/6 in) RQD (%)	Qu (tsf)	Moisture Content (%)
	598.0	5-inch thick ASPHALT						
	597.5	7-inch thick CONCRETE --PAVEMENT--						
	597.0	Gray CRUSH STONE --AGGREGATE BASE--						
		Medium stiff to stiff, dark brown to gray SILTY CLAY LOAM to SILTY CLAY, trace gravel and brick fragments --FILL--			1	4 2 1	0.50 P	39
			5		2	1 1 3	1.56 B	22
	593.0	Stiff, brown and gray SILTY CLAY, trace gravel --RDR 2--			3	2 3 2	1.64 B	24
			10		4	1 3 2	1.39 B	25
					5	2 2 3	1.72 B	26
	585.5	Soft to medium stiff, gray SILTY CLAY, trace gravel --RDR 1--						
			15		6	1 2 2	0.41 B	25
					7	0 2 2	0.41 B	28
			20		8	0 2 3	0.49 B	18
			25		9	0 2 3	0.66 B	14
					10	1 2 4	0.57 B	21
					11	2 3 3	0.57 B	21
	570.5	Stiff to very stiff, gray SILTY CLAY, trace gravel --RDR 2--						
			30		12	2 4 5	1.07 B	25
					13	5 6 8	2.30 B	18
			35					
					14	5 6 7	2.46 B	18
			40					

GENERAL NOTES

Begin Drilling: 05-08-2024 Complete Drilling: 05-08-2024
Drilling Contractor: Wang Testing Services Drill Rig: 20CME55T[81%]
Driller: RH&JD Logger: F. Bozga Checked by: JAB
Drilling Method: 2.25" ID HSA to 10', mud rotary thereafter; backfilled upon completion

WATER LEVEL DATA

While Drilling: ▽ 57.00 ft
At Completion of Drilling: ▼ WASH
Time After Drilling: NA
Depth to Water: ▼ NA
The stratification lines represent the approximate boundary between soil types; the actual transition may be gradual.

Wang Engineering
wangeng@wangeng.com
1145 N Main Street
Lombard, IL 60148
Telephone: (630) 953-9928
Fax:

BORING LOG SAC-01

WEI Job No.: KE235325

Client: Collins Engineers
Project: Paulina Street and Sacramento Blvd over Interstate 290
Location: Chicago, Cook County, IL

Datum: NAVD88
Elevation: 598.46 ft
North: 1897929.76 ft
East: 1156416.89 ft
Station:
Offset:

Profile	Elevation (ft)	SOIL AND ROCK DESCRIPTION	Depth (ft)	Sample Type / recovery	Sample No.	SPT (blw/6 in) RQD (%)	Qu (tsf)	Moisture Content (%)
	551.7	Hard, gray SILTY CLAY LOAM, trace gravel --RDR 2-4--	45		15	4 7 10	2.46 B	20
			50		16	9 12 13	7.05 B	13
	541.7	--rig chatter; possible cobbles--						
		Very dense, gray SILTY LOAM, trace gravel; wet --RDR 3--	55		17	10 18 25	> 10.25 D	16
			60		18	33 42 39	NP	9
	536.7	Hard, gray SILTY CLAY LOAM, little gravel						
	533.5	Strong, light gray, very poor quality, DOLOSTONE; closely spaced, slightly weathered, horizontal, oblique, and vertical joints, with 0.05 - 0.2 inch opening, slicken walls, and <0.2 inch thick clay infill. --Run 1: 65 to 72 feet-- --Recovery: 15%-- --RQD: 0%--	65		19	16 12 50/4"	5.17 B	10
			70		1	0%		
	526.5	Boring terminated at 72.00 ft	75					
			80					

GENERAL NOTES

Begin Drilling: 05-08-2024 Complete Drilling: 05-08-2024
Drilling Contractor: Wang Testing Services Drill Rig: 20CME55T[81%]
Driller: RH&JD Logger: F. Bozga Checked by: JAB
Drilling Method: 2.25" ID HSA to 10', mud rotary thereafter; backfilled upon completion

WATER LEVEL DATA

While Drilling: ▽ 57.00 ft
At Completion of Drilling: ▼ WASH
Time After Drilling: NA
Depth to Water: ▼ NA
The stratification lines represent the approximate boundary between soil types; the actual transition may be gradual.

Boring Location:
Sta. 10+22.39
Offset 28.60' Lt.

Note:
Station and offset measured along ℄ of Sacramento Blvd.

WANGENGINC KE235325.GPJ WANGENG.GDT 6/3/24

MODEL: Default
FILE NAME: P:\10-Lis\14411-IDOT - Sacramento and Paulina over I-290\Work\CADD\Sacramento - Contract 62K65\CADD_Sheets\Structural\ID-162K65-016\162K65-016754-036-boring_logs_1.dgn
10/13/2025 4:34:21 PM

COLLINS ENGINEERS INC.

USER NAME =	DESIGNED - MPR	REVISED -	
	CHECKED - EKM	REVISED -	
PLOT SCALE =	DRAWN - KGZ	REVISED -	
PLOT DATE =	CHECKED - EKM	REVISED -	

STATE OF ILLINOIS
DEPARTMENT OF TRANSPORTATION

SOIL BORING LOGS I
STRUCTURE NO. 016-0754
SHEET S-36 OF S-37 SHEETS

F.A.I. RTE.	SECTION	COUNTY	TOTAL SHEETS	SHEET NO.
290	2019-192-B-R	COOK	237	177
		CONTRACT NO. 62K65		
	ILLINOIS	FED. AID PROJECT NHPP-EW4T(947)		

Wang Engineering
wangeng@wangeng.com
1145 N Main Street
Lombard, IL 60148
Telephone: (630) 953-9928
Fax:

BORING LOG SAC-02

WEI Job No.: KE235325

Client: Collins Engineers
Project: Paulina Street and Sacramento Blvd over Interstate 290
Location: Chicago, Cook County, IL

Datum: NAVD88
Elevation: 600.15 ft
North: 1897551.86 ft
East: 1156481.42 ft
Station:
Offset:

Depth (ft)	Elevation (ft)	SOIL AND ROCK DESCRIPTION	Sample Type / recovery	Sample No.	SPT (blw/6 in) RQD (%)	Qu (tsf)	Moisture Content (%)
	599.7	6-inch thick ASPHALT					
	599.2	9-inch thick CONCRETE					
	598.0	--PAVEMENT--					
	598.6	Gray GRAVEL --AGGREGATE BASE--					
		Medium stiff to hard, dark brown and brown SILTY CLAY to SILTY CLAY LOAM, trace gravel and brick fragments; moist					
		--FILL--		1	3 4 5	4.43 B	
5				2	7 3 2	0.50 P	18
	594.7	Stiff to very stiff, brown SILTY CLAY, trace gravel; moist --RDR 2--		3	3 4 6	3.85 B	21
10				4	3 4 4	3.28 B	21
				5	2 2 3	1.07 B	27
	587.2	Soft to medium stiff, gray SILTY CLAY, trace gravel; moist --RDR 2--					
15				6	0 1 2	0.33 B	27
				7	0 0 1	0.33 B	27
20				8	0 0 1	0.41 B	28
25				9	0 0 2	0.25 B	18
				10	2 1 3	0.57 B	25
30				11	2 2 3	0.66 B	23
				12	1 3 3	0.57 B	27
	563.4	Stiff, gray SILTY CLAY, trace gravel; moist --RDR 2--					
35				13	3 3 3	0.82 B	26
40				14	3 5 6	1.80 B	19

GENERAL NOTES

Begin Drilling: 05-06-2024 Complete Drilling: 05-06-2024
Drilling Contractor: Wang Testing Services Drill Rig: 20CME55T[81%]
Driller: RH&JD Logger: L. Corral Checked by: JAB
Drilling Method: 2.25" ID HSA to 10', mud rotary thereafter; backfilled upon completion

WATER LEVEL DATA

While Drilling: DRY
At Completion of Drilling: WASH
Time After Drilling: NA
Depth to Water: NA

The stratification lines represent the approximate boundary between soil types; the actual transition may be gradual.

Wang Engineering
wangeng@wangeng.com
1145 N Main Street
Lombard, IL 60148
Telephone: (630) 953-9928
Fax:

BORING LOG SAC-02

WEI Job No.: KE235325
Client: Collins Engineers
Project: Paulina Street and Sacramento Blvd over Interstate 290
Location: Chicago, Cook County, IL
Datum: NAVD88
Elevation: 600.15 ft
North: 1897551.86 ft
East: 1156481.42 ft
Station:
Offset:

Depth (ft)	Elevation (ft)	SOIL AND ROCK DESCRIPTION	Sample Type / recovery	Sample No.	SPT (blw/6 in) RQD (%)	Qu (tsf)	Moisture Content (%)
45				15	3 5 6	1.64 B	25
50				16	7 9 10	1.89 B	28
	548.4	Hard, gray SILTY CLAY to SILTY CLAY LOAM, trace gravel; moist --RDR 4--					
55				17	11 22 28	9.84 S	12
60				18	50/4"	NA	13
	538.2	Strong, light gray, fair quality, DOLOSTONE; closely spaced, moderately weathered, horizontal, oblique, and vertical joints, with <0.05 inch opening, slightly rough walls, and <0.2 inch thick clay infill. --Run 1: 62 to 72 feet-- --Recovery: 100%-- --RQD: 50%--					
65				1	50%		
70							
	528.2	Boring terminated at 72.00 ft					
75							
80							

GENERAL NOTES

Begin Drilling: 05-06-2024 Complete Drilling: 05-06-2024
Drilling Contractor: Wang Testing Services Drill Rig: 20CME55T[81%]
Driller: RH&JD Logger: L. Corral Checked by: JAB
Drilling Method: 2.25" ID HSA to 10', mud rotary thereafter; backfilled upon completion

WATER LEVEL DATA

While Drilling: DRY
At Completion of Drilling: WASH
Time After Drilling: NA
Depth to Water: NA
The stratification lines represent the approximate boundary between soil types; the actual transition may be gradual.

Boring Location:
Sta. 06+42.88
Offset 25.68' Lt.

Note:
Station and offset measured along ℄ of Sacramento Blvd.

MODEL: Default
FILE NAME: P:\10eIL\14411-IDOT - Sacramento and Paulina over I-290\Work\CADD\Sacramento - Contract 62K65\CADD_Sheets\Structural\D162K65-016075d-037-boring_logs_2.dgn
10/13/2025 4:34:35 PM
WANGENGINC KE235325.GPJ WANGENG.GDT 6/3/24

COLLINS ENGINEERS INC.

USER NAME =	DESIGNED - MPR	REVISED -	
	CHECKED - EKM	REVISED -	
PLOT SCALE =	DRAWN - KGZ	REVISED -	
PLOT DATE =	CHECKED - EKM	REVISED -	

STATE OF ILLINOIS
DEPARTMENT OF TRANSPORTATION

SOIL BORING LOGS II
STRUCTURE NO. 016-0754
SHEET S-37 OF S-37 SHEETS

F.A.I. RTE.	SECTION	COUNTY	TOTAL SHEETS	SHEET NO.
290	2019-192-B-R	COOK	237	178
		CONTRACT NO. 62K65		
	ILLINOIS	FED. AID PROJECT NHPP-EW4T(947)		

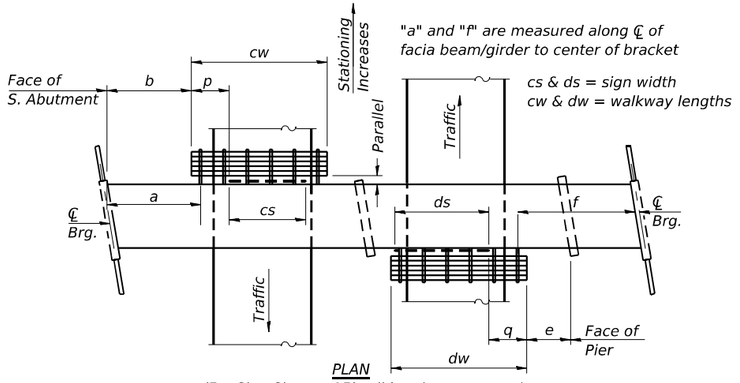

"a" and "f" are measured along ℄ of facia beam/girder to center of bracket

cs & ds = sign width
cw & dw = walkway lengths

(For Sign Skew ≤ 15°, all brackets constant)

WALKWAY AND HANDRAIL SKETCH

(Road plan beneath structure varies.)

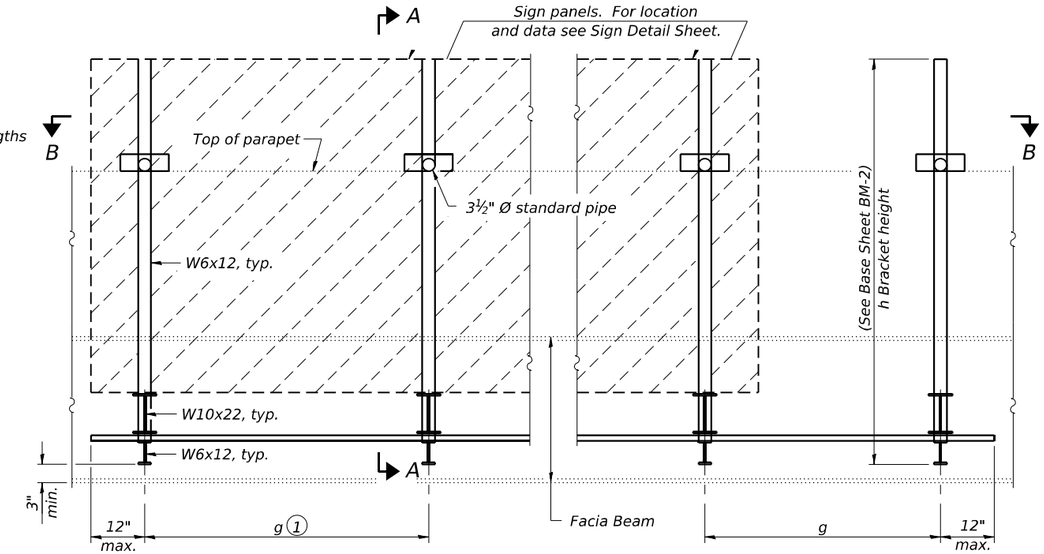

TYPICAL FRONT ELEVATION

(With lights, safety chain and handrail omitted for clarity.)

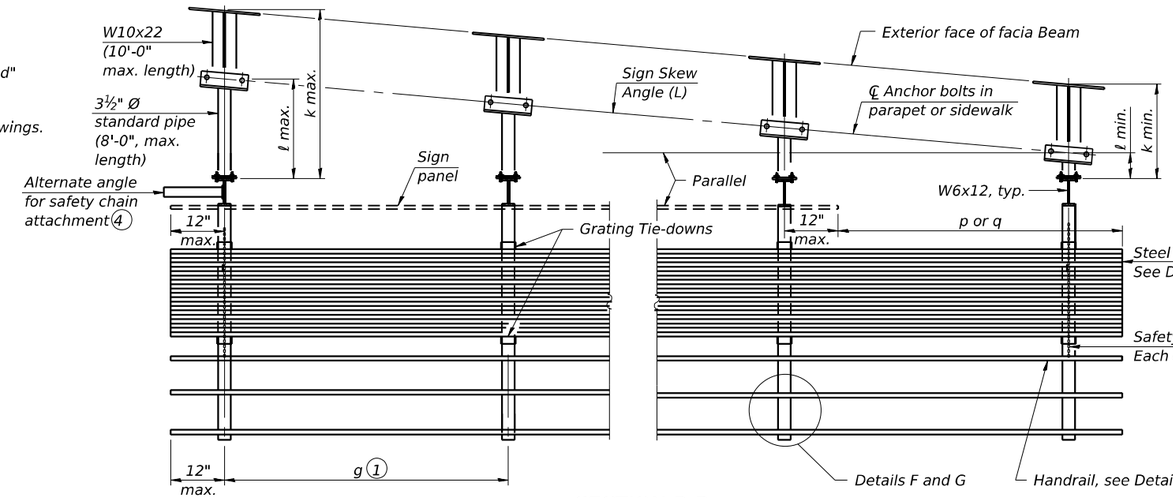

SECTION B-B

(Shown: Left Sign Skew≥15°)

Notes:

1. Existing sign panels shall be removed, stored during construction and attached to new beams and new parapet using new brackets. See Roadway Plans for additional information.
2. Walkways, light fixtures, handrails and all related hardware are not required; shop drawings shall be adjusted accordingly.
3. Refer to Special Provisions "Overhead Sign Structure - Bridge Mounted" for limits of payment.
4. The contractor shall verify all dimensions before submitting shop drawings.

Sign Panel Number	Structure Number	Sign Skew Angle (L) or (R)	Bridge Station	Bridge Structure Number	Contract Route Designation	a	b	cs	cw	ds	dw	e	f	g	No. of Brackets (Total)	p	q	Total Grating/ Hndrl. Lengths (cw + dw)
1	IB016I290R027.0	9°23'40"	8+16.86	016-0754	F.A.U. 2833	21'-0"	-	17'-0"	-	-	-	-	-	4'-0"	5	-	-	-
2	IB016I290R027.0	9°23'40"	8+16.86	016-0754	F.A.U. 2833	41'-6"	-	15'-6"	-	-	-	-	-	4'-10"	4	-	-	-

Dimensions a, b, e, f & g may vary as approved by the Engineer, see (1).
When cw < cs and/or dw < ds, use alternate brackets without walkway supports where applicable, see (3).

GENERAL NOTES

SPECIFICATIONS:

DESIGN: AASHTO Standard Specifications for Structural Supports for (2) Highway Signs, Luminaires and Traffic Signals. ("AASHTO Specifications")

CONSTRUCTION: Current (at time of letting) Illinois Department of Transportation Standard Specifications for Road and Bridge Construction, Supplemental Specifications and Special Provisions. ("Standard Specifications")

LOADING: 90 M.P.H. WIND VELOCITY

WALKWAY LOADING: Dead load plus 500 lbs. concentrated live load.

MINIMUM CLEARANCE: 3" greater than bridge members at all locations. (All Obstructions)

WELDING: All welds to be continuous unless otherwise shown. All welding to be done in accordance with current AWS D1.1 Structural Welding Code (Steel) and the Standard Specificiations.

MATERIALS: All Structural Steel Pipe shall be ASTM A53 Grade B with a minimum yield of 35,000 p.s.i., or A500 Grade B or C with a minimum yield of 46,000 p.s.i. If A500 pipe is substituted for A53, then the outside diameter shall be as detailed and wall thickness greater than or equal to A53. All Structural Steel Plates and Shapes shall conform to AASHTO M270 Gr. 36, Gr. 50 (M183, M223 Gr. 50,).

HIGH STRENGTH BOLTS: All bolts, washers, nuts and locknuts shall satisfy the requirements of ASTM designation A307 unless noted as "H.S." which shall require AASHTO M164 (A325), ASTM A449, or approved alternate. All fasteners shall be hot dip galvanized per AASHTO M232 unless otherwise specified.

GALVANIZING: All Steel Grating, Plates, Shapes and Pipe shall be Hot Dip Galvanized after fabrication in accordance with AASHTO M111. Painting is not permitted.

ANCHOR RODS: All-threaded rod shall conform to ASTM F1554 Grade 105, ¾" Ø x 12" long, each with one plate washer and locknut and be hot dip galvanized per AASHTO M232. They shall be either cast into the concrete or epoxy grouted in accordance with Section 584 of the Standard Specifications. Minimum embedment in concrete shall be 9".

(1) Bracket spacing g ≤ 6'-0", max. Spacing shall be uniform if possible but may vary ±6" to miss existing obstruction (rail post, light poles, web stiffeners, splice plates, etc.). Adjust bracket lengths accordingly on skewed structures.

(2) Any design modifications shall be based on the current version of applicable specifications and submitted for the Engineer's approval.

*(3) Unit price includes grating, handrail, brackets, supports, anchor bolts, fasteners, fabrication, delivery, erection, field drilling and other necessary items. Limits of payment are based on grating length (cw, dw) unless otherwise specified. For Safety Chain Details and Details D, F and G, see Base Sheet BM-4.

(4) If walkway bracket at safety chain location is behind sign, add angle to bracket. See detail on Base Sheet BM-4.

TOTAL BILL OF MATERIAL

(3) OVERHEAD SIGN STRUCTURE-BRIDGE MOUNTED	Foot	36
REMOVE OVERHEAD SIGN STRUCTURE-BRIDGE MOUNTED	EACH	2

* See Notes 2 and 3 on this Sheet.

MODEL: Default
FILE NAME: P:\10-IL\11441-IDOT - Sacramento and Paulina over I-290\Work\CADD\Sacramento - Contract 62K65\CADD_Sheets\Structural\D162K65-016075+038-bridge_mount_sign_1.dgn
10/13/2025 4:22:40 PM

COLLINS ENGINEERS INC.

USER NAME =	DESIGNED - MPR	REVISED -	
	CHECKED - EKM	REVISED -	
PLOT SCALE =	DRAWN - KGZ	REVISED -	
PLOT DATE =	CHECKED - EKM	REVISED -	

STATE OF ILLINOIS
DEPARTMENT OF TRANSPORTATION

BRIDGE MOUNT SIGN STRUTURES GENERAL PLAN AND ELEVATION
STRUCTURE NO. 016-0754
SHEET SA-1 OF SA-3 SHEETS

F.A.I. RTE.	SECTION	COUNTY	TOTAL SHEETS	SHEET NO.
290	2019-192-B-R	COOK	237	179
		CONTRACT NO. 62K65		
	ILLINOIS	FED. AID PROJECT NHPP-EW4T(947)		

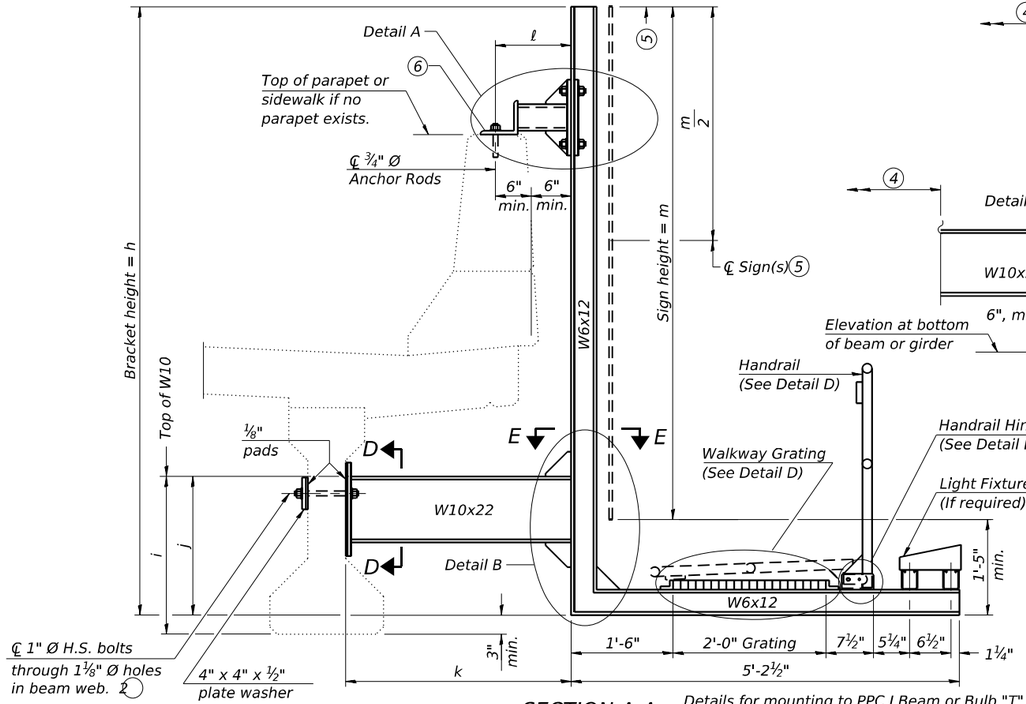

SECTION A-A

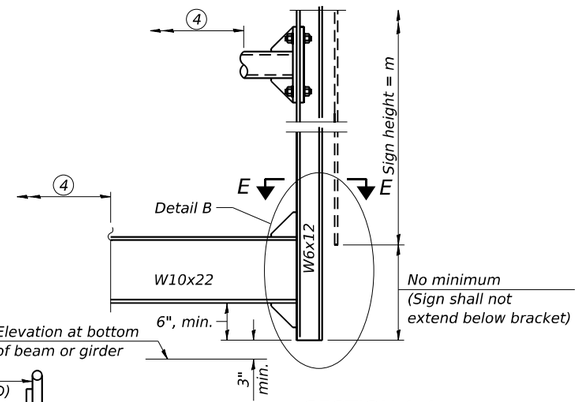

SECTION A-A

Alternate with no lights or walkways

Details for mounting to PPC I Beam or Bulb "T" & Details for mounting to parapet w/o rail

Notes:

Installations not within dimensional limits shown require special analysis for all components and must be submitted to the Bureau of Bridges and Structures for approval.

Contractor shall field check all pertinent existing bridge dimensions shown on plans before submitting shop drawings.

All holes in bridge beams or girders should be located in the middle half of the member. There shall be no holes drilled in the lower quarter of the member's depth. (For R.C. girder, depth = bottom of deck to bottom of the girder.) Proposed exceptions must be approved by the Bureau of Bridges and Structures.

The Engineer may adjust dimension "i" to meet the above condition and to keep the sign level.

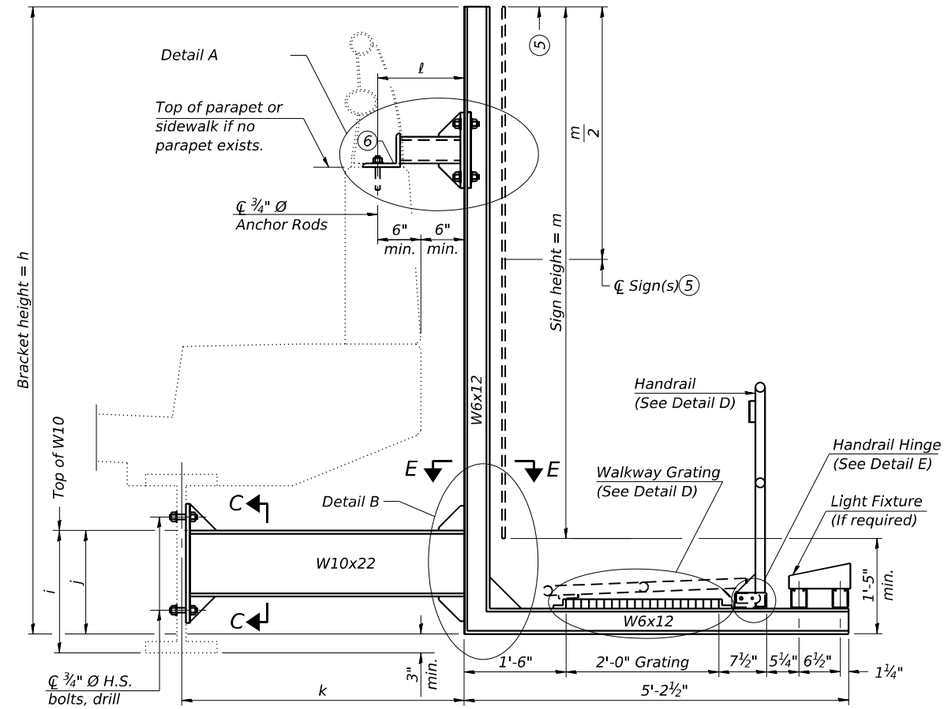

SECTION A-A

Details for mounting to steel beam or girder & Details for mounting with existing parapet mounted rail

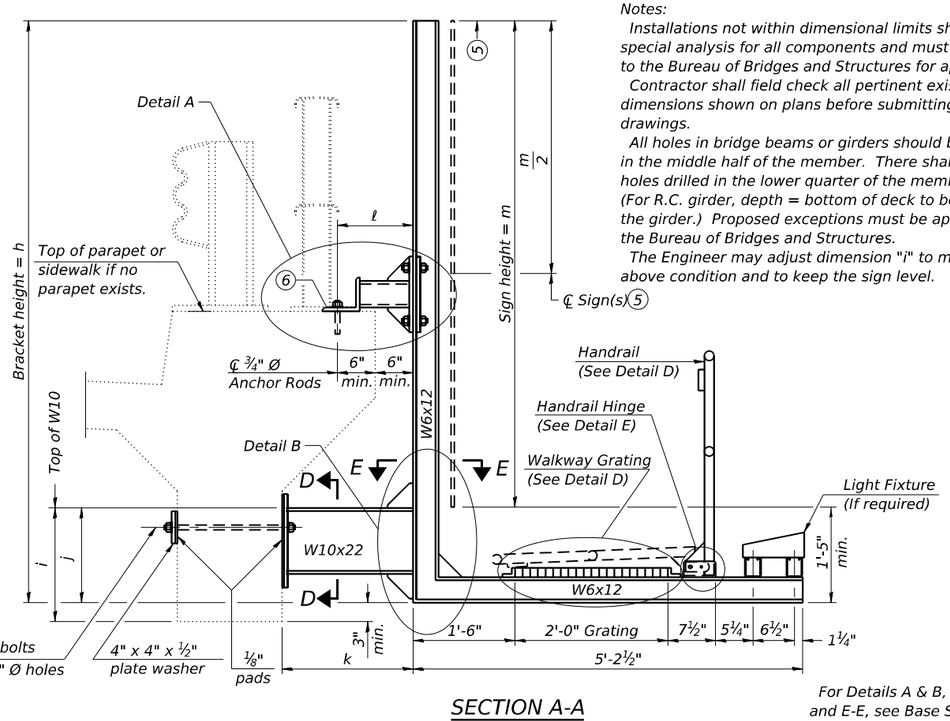

SECTION A-A

Details for mounting to integral reinforced concrete girder & Details for mounting on safety curb with surface-mount bridge rail

1. Holes in new steel members may be drilled in the fabrication shop or in the field. Field drill existing members.

2. For new PPC I beams, holes shall be formed during casting. For existing PPC I beams, prestressing strand locations shall be determined and spaced to miss strands by 6", min. Minimize spalling during field drilling of existing beams.

3. For new construction, form holes. For existing RC beams, locate primary reinforcement and space holes to miss by 6", min. Minimize spalling and concrete fracturing/damage during field drilling of existing concrete. Spalls over ¼" deep or beyond the coverage of the 4x4 plate washer shall be repaired with epoxy mortar before installing washer.

4. For attachment details of 3½" pipe and W10x22, see other sections as applicable.

5. Sign shall not extend more than 6" above top of bracket, and this dimension may vary to keep sign level if bridge is on grade or vertical curve. Multiple signs of various heights shall share a common horizontal centerline and use equal bracket heights. If no sign is attached to a W6x12 vertical (bracket only supporting walkway), dimension h shall be the same as an adjacent bracket with a sign attached, unless Engineer specifically directs shorter brackets due to locational restraints on future uses. (See Detail A for minimum bracket height.)

6. For bridge mounted sign structures installed on new bridges with railing, during design, bracket spacing must be coordinated with railing post spacing and the Contractor must install upper brackets prior to railing installation. For bridge mounted sign structures installed on existing bridges with railing, during design, brackets spacing must be coordinated with railing post spacing and the Contractor must temporarily remove sections of railing to facilitate upper bracket installation. If it is determined during design that existing railings can't be removed, alternate upper connection details must be developed for the contract plans and approved by the Bureau of Bridges and Structures.

Sign Panel Number	Structure Number	Station	h	i	j	k max. (10'-0" max.)	ℓ max. (8'-0" max.)	m (15'-0" max.)
1	IB016I290R027.0	8+16.86	8'-0"	1'-7¼"	1'-4¼"	3'-9"	1'-0"	8'-0"
2	IB016I290R027.0	8+16.86	8'-0"	1'-7¼"	1'-4¼"	3'-9"	1'-0"	8'-0"

For Details A & B, Sections C-C, D-D and E-E, see Base Sheet BM-3.
For Details D & E, see Base Sheet BM-4.

BM-2 5-15-2023

COLLINS ENGINEERS INC.

USER NAME =	DESIGNED - MPR	REVISED -	
	CHECKED - EKM	REVISED -	
PLOT SCALE =	DRAWN - KGZ	REVISED -	
PLOT DATE =	CHECKED - EKM	REVISED -	

STATE OF ILLINOIS
DEPARTMENT OF TRANSPORTATION

BRIDGE MOUNT SIGN STRUCTURES WALKWAY AND CONN. DETAILS
STRUCTURE NO. 016-0754
SHEET SA-2 OF SA-3 SHEETS

F.A.I. RTE.	SECTION	COUNTY	TOTAL SHEETS	SHEET NO.
290	2019-192-B-R	COOK	237	180
		CONTRACT NO. 62K65		
		ILLINOIS	FED. AID PROJECT NHPP-EW4T(947)	

MODEL: Default
FILE NAME: P:\10cIL14411-IDOT - Sacramento and Paulina over I-290\Work\CADD\Sacramento - Contract 62K65\CADD_Sheets\Structural\D162K65-016075-4-039-bridge_mount_sign_2.dgn
10/13/2025 4:22:42 PM

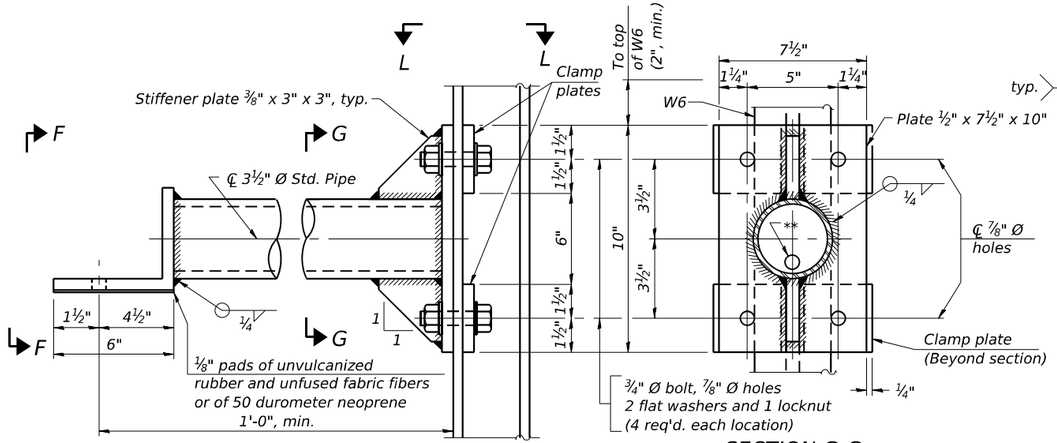

DETAIL A

SECTION G-G

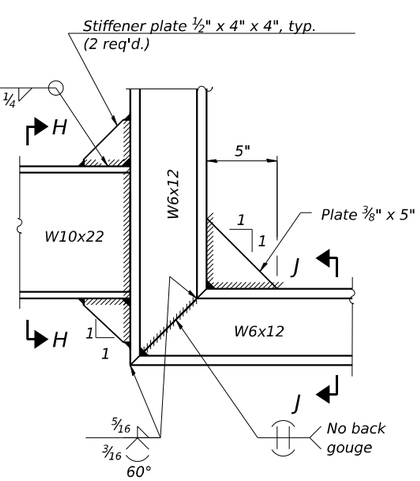

DETAIL B - WELDED W10x22 TO W6x12 CONNECTION

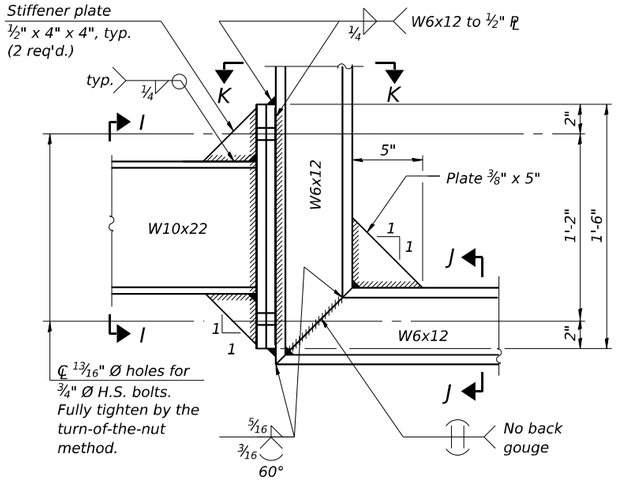

DETAIL B - ALTERNATE BOLTED W10x22 TO W6x12 CONNECTION

Alternate may be substituted by contractor to facilitate construction or galvanizing, especially on long struts for skewed bridges.

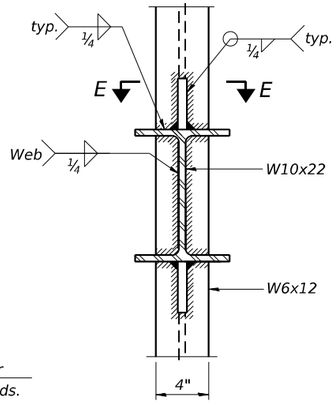

SECTION H-H

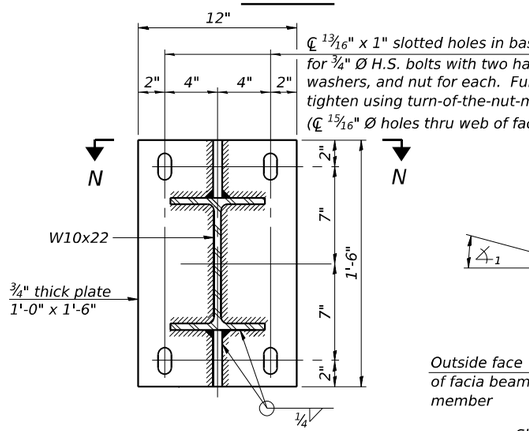

SECTION C-C

Steel beam or girder connection plate details

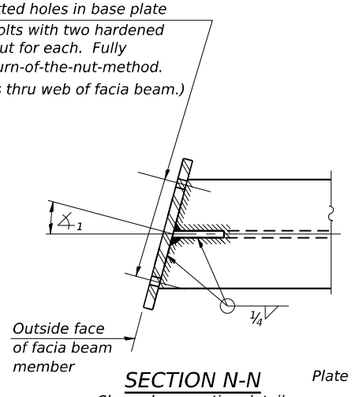

SECTION N-N

Skewed connection detail for W10x22 to facia beam.

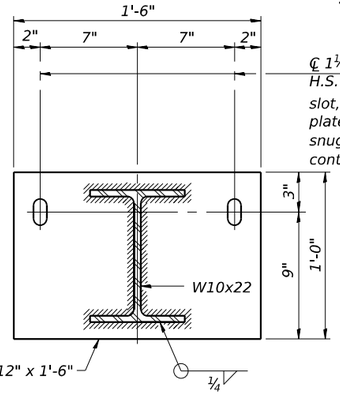

SECTION D-D

Concrete beam or girder connection plate details.

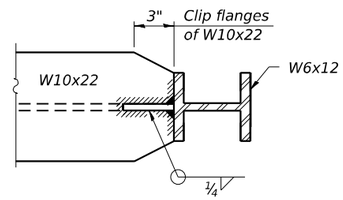

SECTION E-E

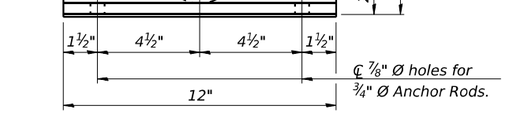

VIEW F-F

** 13/16" Ø holes for galvanizing. After galvanizing, install ⅞" Ø A307 hot-dip galvanized bolt to close hole in angle. (No bolt required in ½" plate.)

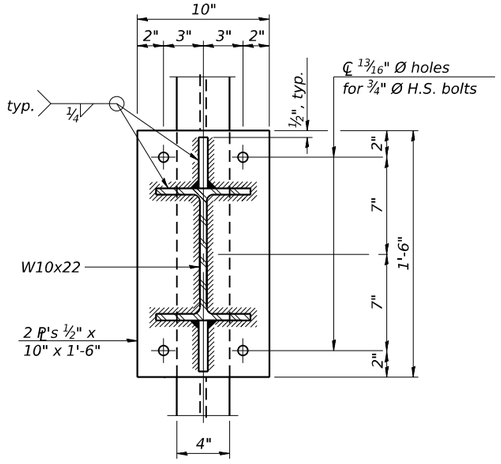

SECTION I-I

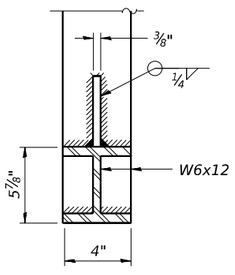

SECTION J-J

Note: For constant slab overhang at facia beam, $\measuredangle_1 = \measuredangle_2$ = sign angle. For flared beams or other special cases where $\measuredangle_1 \neq \measuredangle_2$, $\measuredangle_1$ = sign angle.

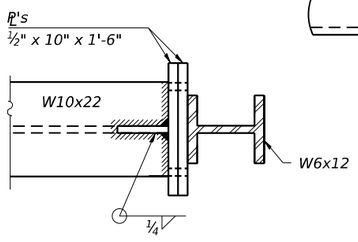

SECTION K-K

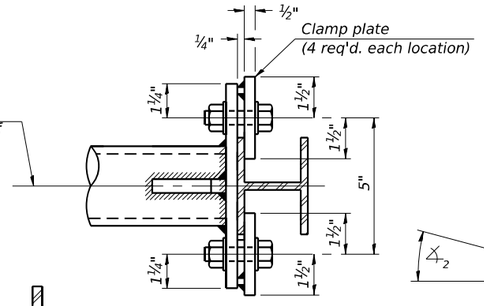

SECTION L-L

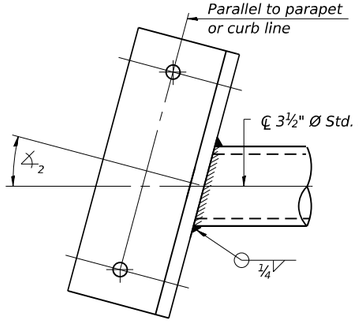

SECTION M-M

Skewed connection detail for 3½" Ø pipe to parapet.

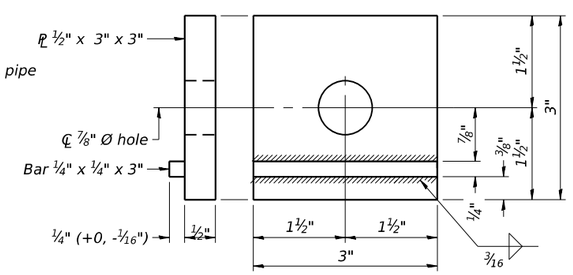

CLAMP PLATE DETAILS

BM-3

5-15-2023

USER NAME =	DESIGNED - MPR	REVISED -	
	CHECKED - EKM	REVISED -	
PLOT SCALE =	DRAWN - KGZ	REVISED -	
PLOT DATE =	CHECKED - EKM	REVISED -	

COLLINS ENGINEERS INC.

STATE OF ILLINOIS
DEPARTMENT OF TRANSPORTATION

BRIDGE MOUNT SIGN STRUCTURES CONNECTION DETAILS
STRUCTURE NO. 016-0754

SHEET SA-3 OF SA-3 SHEETS

F.A.I. RTE.	SECTION	COUNTY	TOTAL SHEETS	SHEET NO.
290	2019-192-B-R	COOK	237	181
		CONTRACT NO. 62K65		
	ILLINOIS	FED. AID PROJECT NHPP-EW4T(947)		

MODEL: Default
FILE NAME: P:\10\CL114411-IDOT - Sacramento and Paulina over I-290\Work\CADD\Sacramento - Contract 62K65\CADD_Sheets\Structural\D162K65-0160754-0d0-bridge_mount_sign_3.dgn
10/13/2025 4:22:43 PM

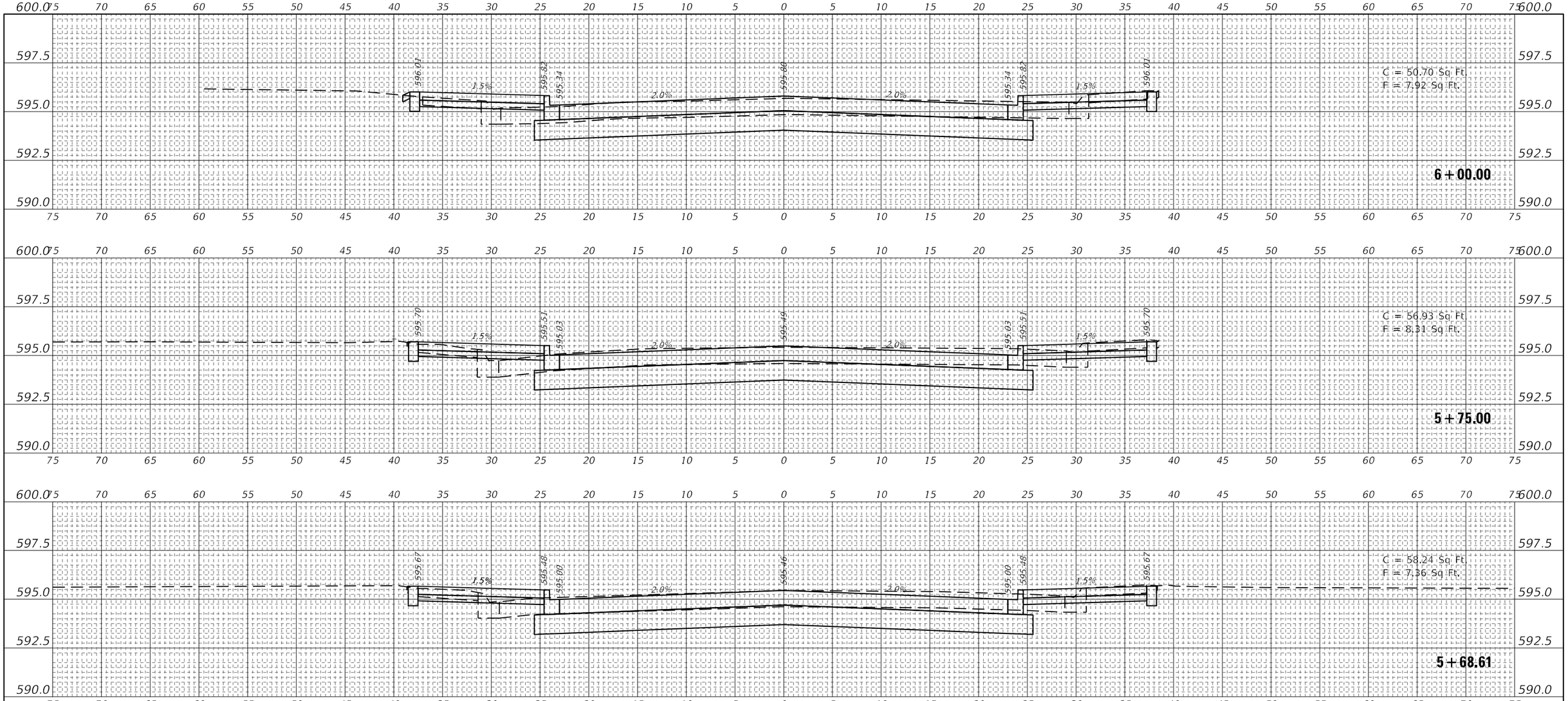

FINAL SURVEY | NOTE BOOK NO. | SURVEYED | PLOTTED | TEMPLATE | AREAS | AREAS CHECKED | BY | DATE

ORIGINAL SURVEY | NOTE BOOK NO. | SURVEYED | PLOTTED | TEMPLATE | AREAS | AREAS CHECKED | BY | DATE

MODEL: SACRAMENTO1_1
FILE NAME: C:\ICS4PDP\130\21315_38\D162K65-sht-xssht-Sacramento.dgn

HORNER SHIFRIN
WWW. HORNERSHIFRIN .COM

USER NAME = PWICS$	DESIGNED -	REVISED -
	DRAWN -	REVISED -
PLOT SCALE =	CHECKED -	REVISED -
PLOT DATE = 9/11/2025	DATE -	REVISED -

STATE OF ILLINOIS
DEPARTMENT OF TRANSPORTATION

CROSS SECTIONS
SACRAMENTO BLVD RECONSTRUCTION

SCALE: | SHEET 1 OF 4 SHEETS | STA. 5+68.61 TO STA. 6+00.00

F.A.I. RTE.	SECTION	COUNTY	TOTAL SHEETS	SHEET NO.
290	2019-192-B-R	COOK	237	182
		CONTRACT NO. 62K65		
		ILLINOIS	FED. AID PROJECT	

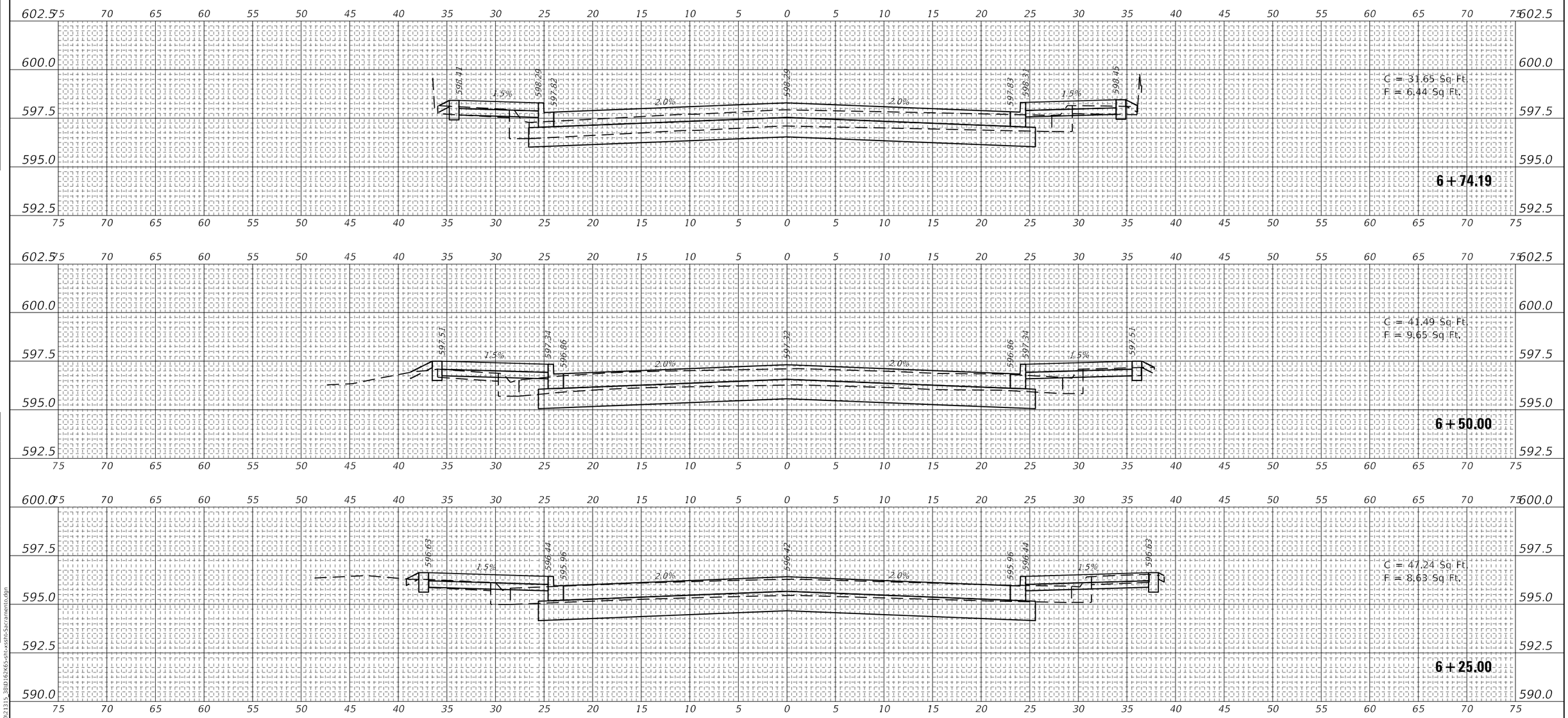

FINAL SURVEY		BY	DATE
NOTE BOOK	SURVEYED		
NO.	PLOTTED		
	TEMPLATE		
	AREAS		
	AREAS CHECKED		

ORIGINAL SURVEY		BY	DATE
NOTE BOOK	SURVEYED		
NO.	PLOTTED		
	TEMPLATE		
	AREAS		
	AREAS CHECKED		

MODEL: SACRAMENTO1_1
FILE NAME: C:\ICS4PDP\130\21315_38\D162K65-sht-xssht-Sacramento.dgn

HORNER SHIFRIN
WWW. HORNERSHIFRIN .COM

USER NAME = PWICS$	DESIGNED -	REVISED -	
	DRAWN -	REVISED -	
PLOT SCALE =	CHECKED -	REVISED -	
PLOT DATE = 9/11/2025	DATE -	REVISED -	

STATE OF ILLINOIS
DEPARTMENT OF TRANSPORTATION

CROSS SECTIONS
SACRAMENTO BLVD RECONSTRUCTION

SCALE: | SHEET 2 OF 4 SHEETS | STA. 6+25.00 TO STA. 6+74.19

F.A.I. RTE.	SECTION	COUNTY	TOTAL SHEETS	SHEET NO.
290	2019-192-B-R	COOK	237	183
		CONTRACT NO. 62K65		
		ILLINOIS	FED. AID PROJECT	

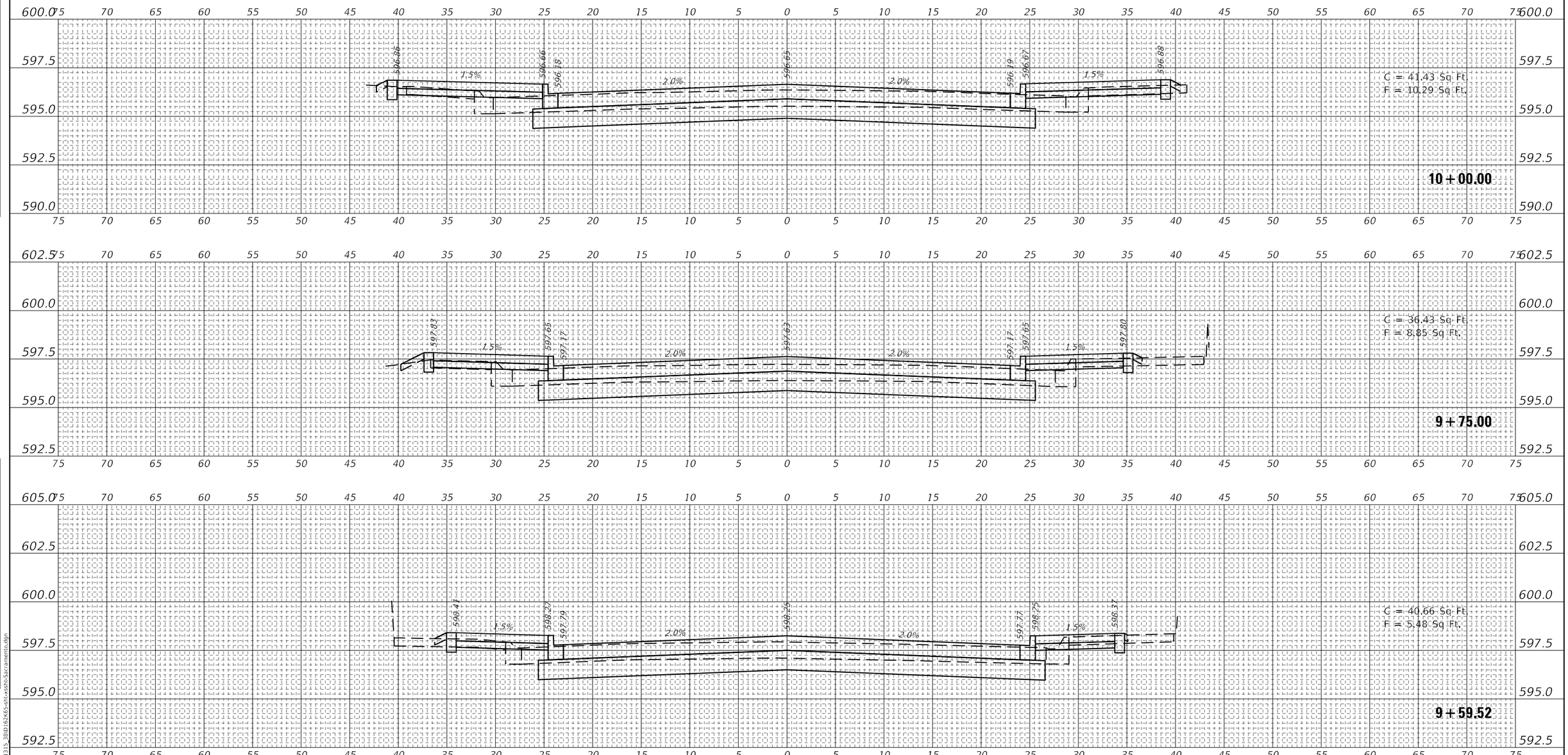

FINAL SURVEY | NOTE BOOK NO. | SURVEYED | PLOTTED | TEMPLATE | AREAS | AREAS CHECKED | BY | DATE

ORIGINAL SURVEY | NOTE BOOK NO. | SURVEYED | PLOTTED | TEMPLATE | AREAS | AREAS CHECKED | BY | DATE

MODEL: SACRAMENTO1_1
FILE NAME: C:\ICS4PDF\130\21315_38\D162K65-sht-xssht-Sacramento.dgn

HORNER SHIFRIN
WWW. HORNERSHIFRIN .COM

USER NAME = PWICS$	DESIGNED -	REVISED -	
	DRAWN -	REVISED -	
PLOT SCALE =	CHECKED -	REVISED -	
PLOT DATE = 9/11/2025	DATE -	REVISED -	

STATE OF ILLINOIS
DEPARTMENT OF TRANSPORTATION

CROSS SECTIONS
SACRAMENTO BLVD RECONSTRUCTION

SCALE: | SHEET 3 OF 4 SHEETS | STA. 9+59.52 TO STA. 10+00.00

F.A.I. RTE.	SECTION	COUNTY	TOTAL SHEETS	SHEET NO.
290	2019-192-B-R	COOK	237	184

CONTRACT NO. 62K65

ILLINOIS | FED. AID PROJECT

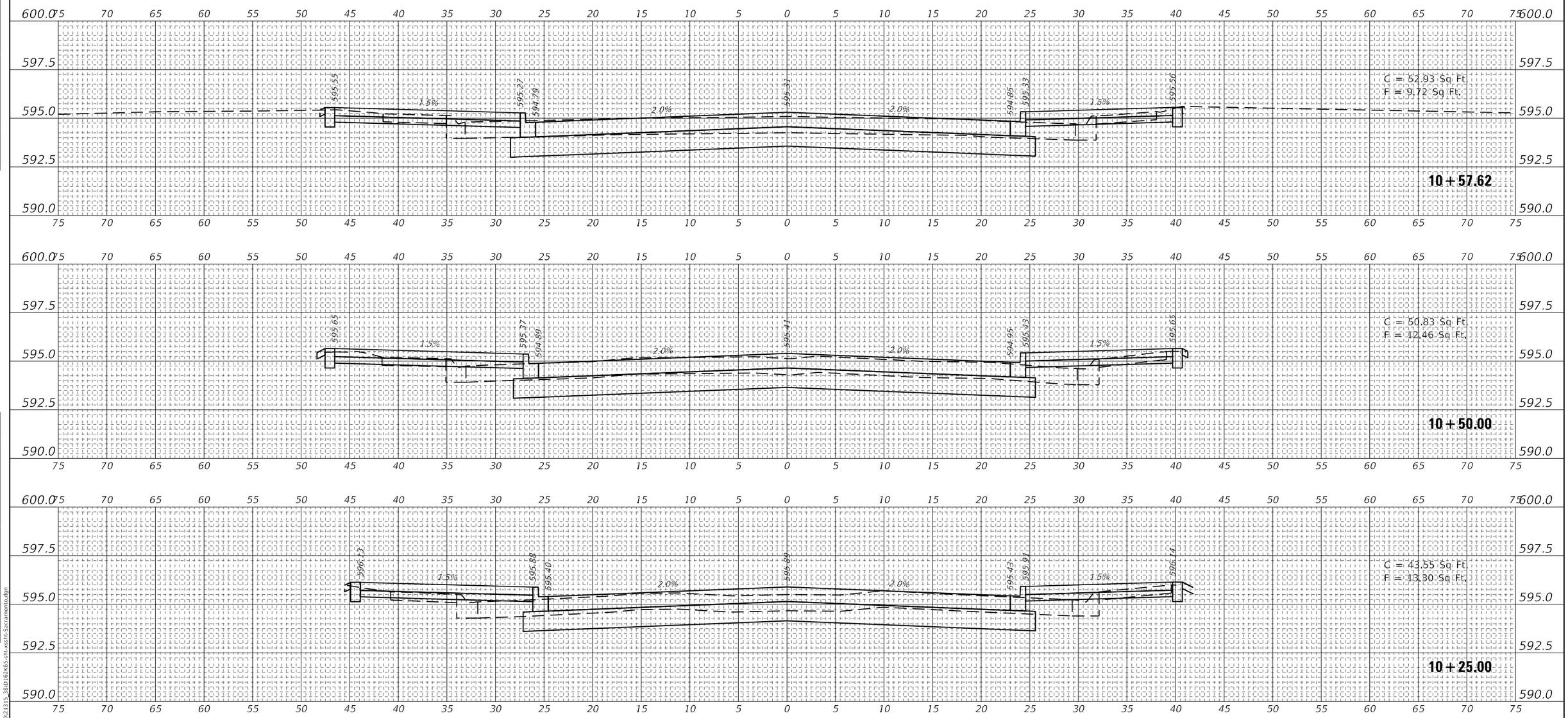

FINAL SURVEY | NOTE BOOK NO. | SURVEYED | PLOTTED | TEMPLATE | AREAS | AREAS CHECKED | BY | DATE

ORIGINAL SURVEY | NOTE BOOK NO. | SURVEYED | PLOTTED | TEMPLATE | AREAS | AREAS CHECKED | BY | DATE

MODEL: SACRAMENTO1_1
FILE NAME: C:\ICS4PDP\130\21315_38\D162K65-sht-xssht-Sacramento.dgn

HORNER SHIFRIN
WWW. HORNERSHIFRIN .COM

USER NAME = PWICS$	DESIGNED -	REVISED -	
	DRAWN -	REVISED -	
PLOT SCALE =	CHECKED -	REVISED -	
PLOT DATE = 9/11/2025	DATE -	REVISED -	

STATE OF ILLINOIS
DEPARTMENT OF TRANSPORTATION

CROSS SECTIONS
SACRAMENTO BLVD RECONSTRUCTION

SCALE: | SHEET 4 OF 4 SHEETS | STA. 10+25.00 TO STA. 10+57.00

F.A.I. RTE.	SECTION	COUNTY	TOTAL SHEETS	SHEET NO.
290	2019-192-B-R	COOK	237	185
		CONTRACT NO. 62K65		
		ILLINOIS	FED. AID PROJECT	

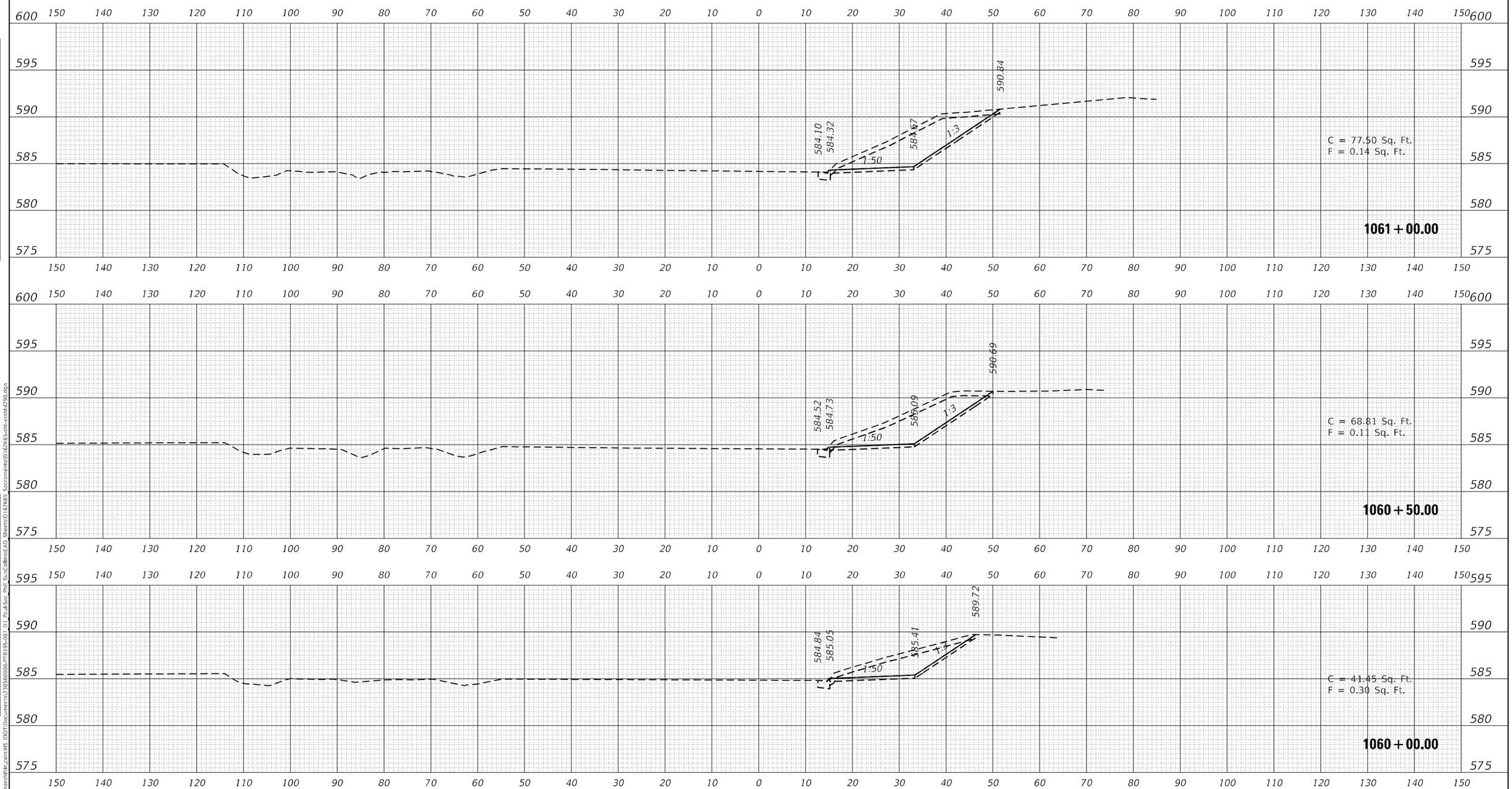

FINAL SURVEY | NOTE BOOK NO. | SURVEYED | PLOTTED | TEMPLATE | AREAS | AREAS CHECKED | BY | DATE

ORIGINAL SURVEY | NOTE BOOK NO. | SURVEYED | PLOTTED | TEMPLATE | AREAS | AREAS CHECKED | BY | DATE

MODEL: 290EB_Current
FILE NAME: pw:\\PW01.hornershifrin.com:HS IDOT\Documents\230560000-PTB195-007 D1 Paul-Sac Phil Sua\Collins\CAD Sheets\D162K65 Sacramento\D162K65-sht-xssht-I290.dgn

HORNER SHIFRIN
WWW.HORNERSHIFRIN.COM

USER NAME = bctimmermann	DESIGNED -	REVISED -	
	DRAWN -	REVISED -	
PLOT SCALE = 20.0000 ' / in.	CHECKED -	REVISED -	
PLOT DATE = 9/11/2025	DATE -	REVISED -	

STATE OF ILLINOIS
DEPARTMENT OF TRANSPORTATION

CROSS SECTIONS
I-290 EB

SCALE: | SHEET 1 OF 7 SHEETS | STA. 1060+00.00 TO STA. 1061+00.00

F.A.I RTE.	SECTION	COUNTY	TOTAL SHEETS	SHEET NO.
290	2019-192-B-R	COOK	237	186
		CONTRACT NO. 62K65		
		ILLINOIS	FED. AID PROJECT	

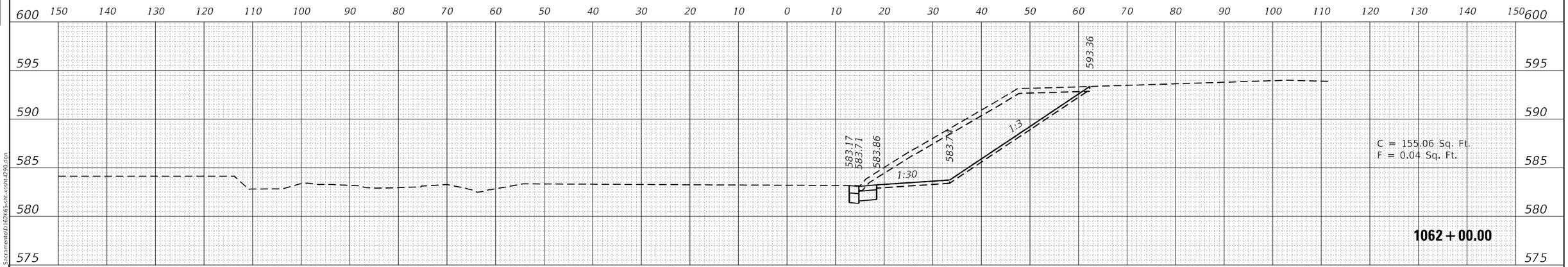

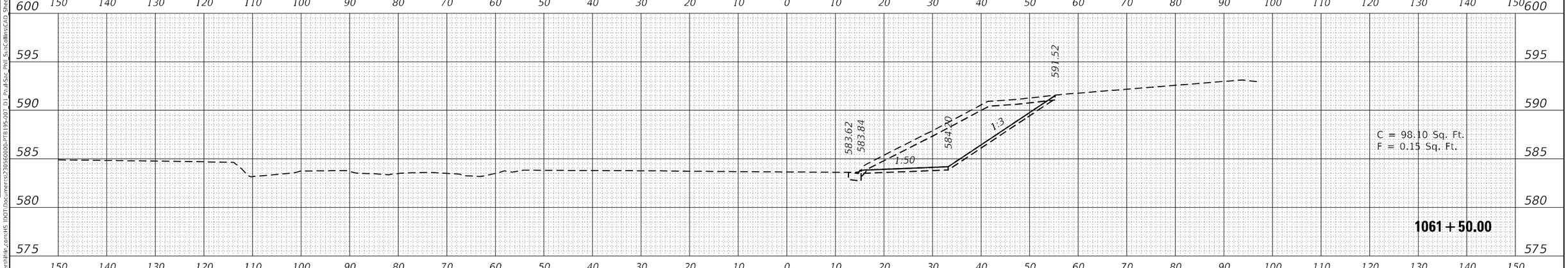

HORNER SHIFRIN WWW.HORNERSHIFRIN.COM	USER NAME = bctimmermann	DESIGNED -	REVISED -
		DRAWN -	REVISED -
	PLOT SCALE = 20.0000 ' / in.	CHECKED -	REVISED -
	PLOT DATE = 9/11/2025	DATE -	REVISED -

STATE OF ILLINOIS
DEPARTMENT OF TRANSPORTATION

CROSS SECTIONS
I-290 EB

SCALE: | SHEET 2 OF 7 SHEETS | STA. 1061+50.00 TO STA. 1062+00.00

F.A.I RTE.	SECTION	COUNTY	TOTAL SHEETS	SHEET NO.
290	2019-192-B-R	COOK	237	187
		CONTRACT NO. 62K65		
		ILLINOIS	FED. AID PROJECT	

FINAL SURVEY | NOTE BOOK NO. | SURVEYED | PLOTTED | TEMPLATE | AREAS | AREAS CHECKED | BY | DATE

ORIGINAL SURVEY | NOTE BOOK NO. | SURVEYED | PLOTTED | TEMPLATE | AREAS | AREAS CHECKED | BY | DATE

MODEL: 290EB_Current
FILE NAME: pw:\\PW01.hornershifrin.com:HS IDOT\Documents\230560000-PTB195-007_D1_Paul-Sac_Phil_SubCollins\CAD Sheets\D162K65_Sacramento\D162K65-sht-xssht-I290.dgn

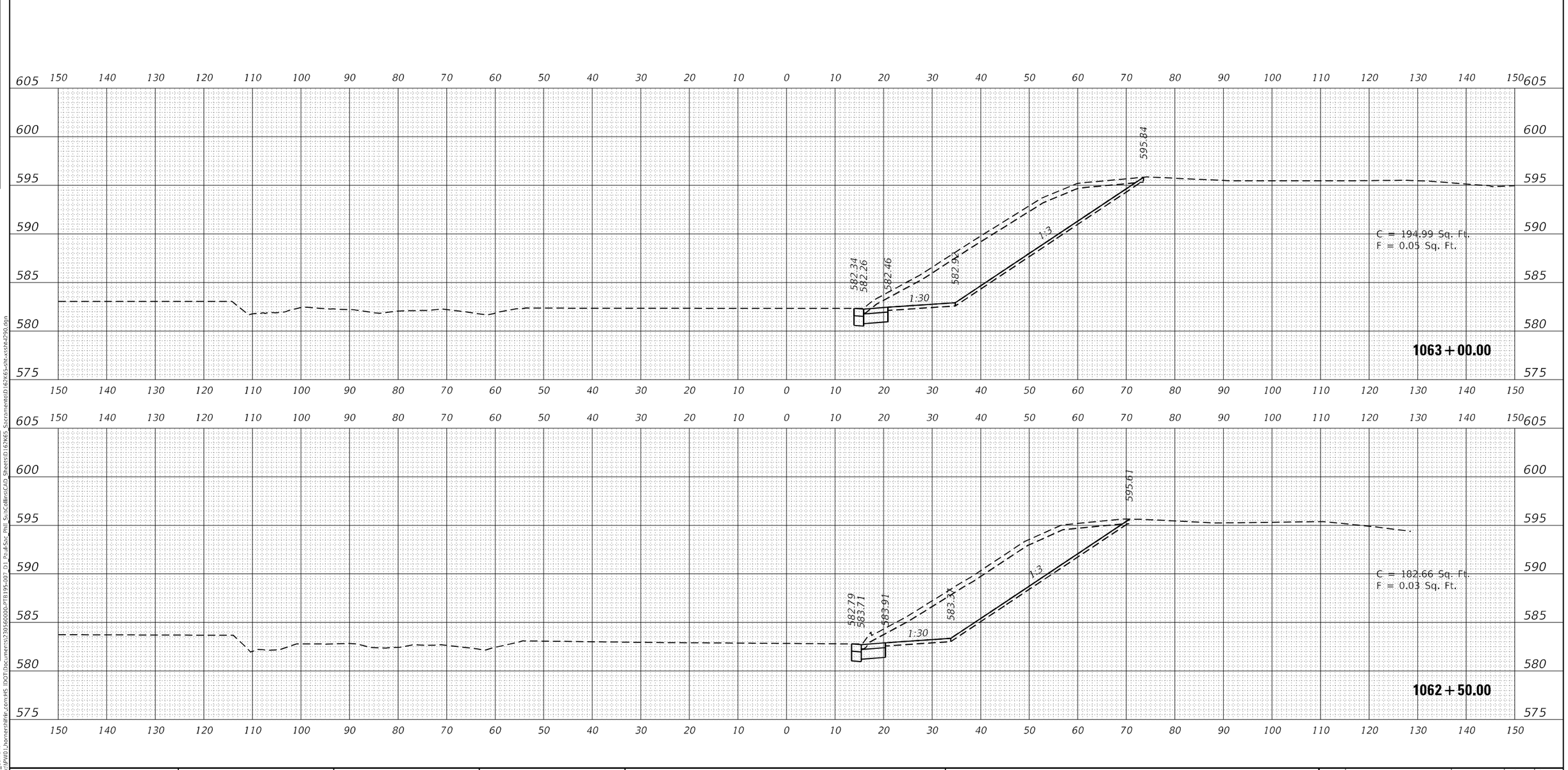

FINAL SURVEY — NOTE BOOK — NO. — SURVEYED — PLOTTED — TEMPLATE — AREAS — AREAS CHECKED — BY — DATE

ORIGINAL SURVEY — NOTE BOOK — NO. — SURVEYED — PLOTTED — TEMPLATE — AREAS — AREAS CHECKED — BY — DATE

MODEL: 290EB_Current
FILE NAME: pw:\\PW01.hornershifrin.com:IHS IDOT\Documents\230560000-PTB195-007 D1 Proj\Sac Phil_Sub\Collinss\CAD Sheets\D1 62K65 Sacramento\D1 62K65-sht-sssht-290.dgn

HORNER SHIFRIN
WWW. HORNERSHIFRIN .COM

USER NAME = bctimmermann	DESIGNED -	REVISED -
	DRAWN -	REVISED -
PLOT SCALE = 20.0000 ' / in.	CHECKED -	REVISED -
PLOT DATE = 9/11/2025	DATE -	REVISED -

STATE OF ILLINOIS
DEPARTMENT OF TRANSPORTATION

CROSS SECTIONS
I–290 EB

SCALE: | SHEET 3 OF 7 SHEETS | STA. 1062+50.00 TO STA. 1063+00.00

F.A.I RTE.	SECTION	COUNTY	TOTAL SHEETS	SHEET NO.
290	2019-192-B-R	COOK	237	188
		CONTRACT NO. 62K65		
		ILLINOIS	FED. AID PROJECT	

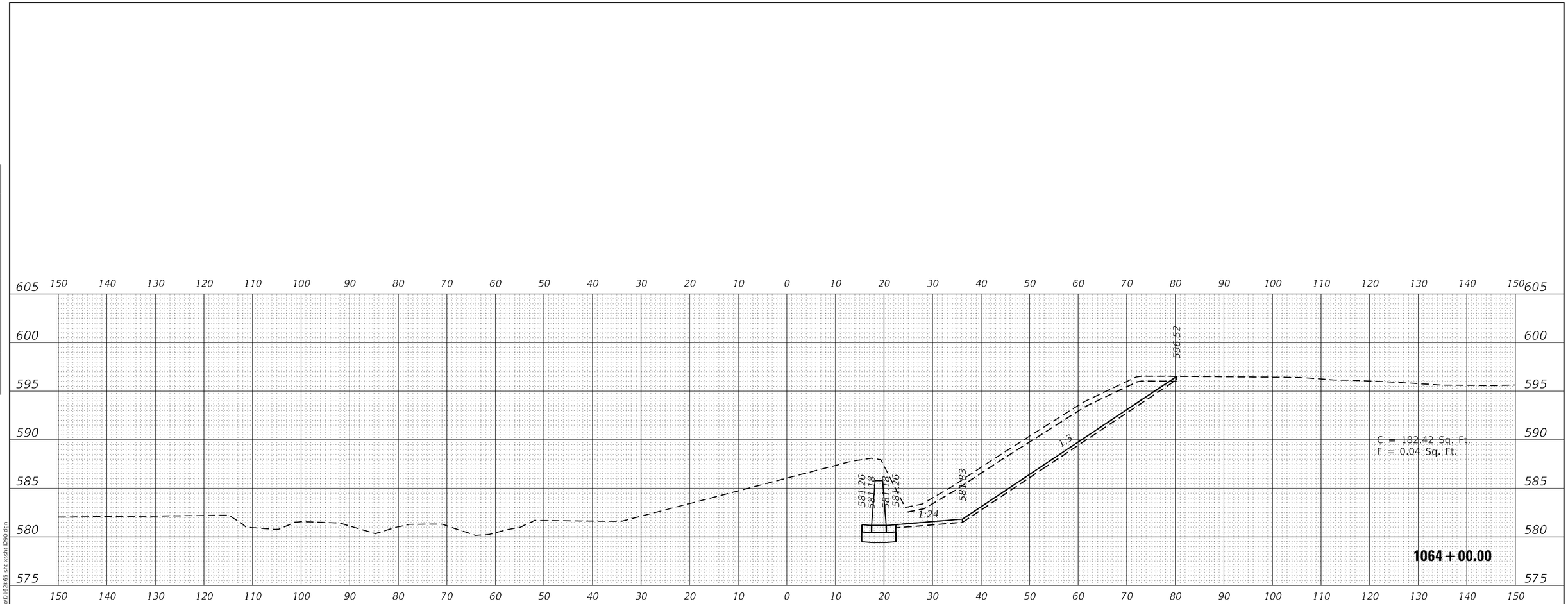

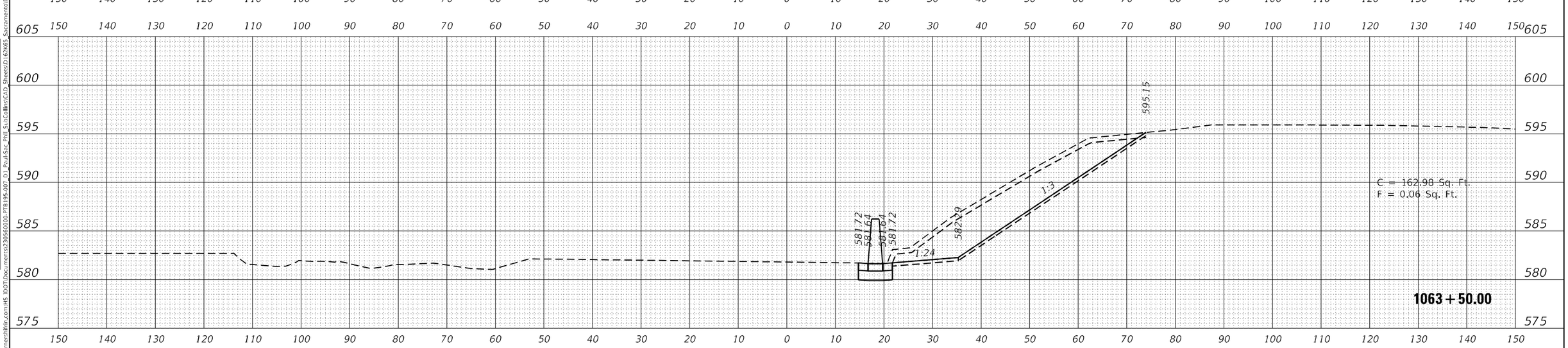

FINAL SURVEY		BY	DATE
NOTE BOOK NO.	SURVEYED		
	PLOTTED		
	TEMPLATE		
	AREAS		
	AREAS CHECKED		

ORIGINAL SURVEY		BY	DATE
NOTE BOOK NO.	SURVEYED		
	PLOTTED		
	TEMPLATE		
	AREAS		
	AREAS CHECKED		

MODEL: 290FB_Current
FILE NAME: pw:\\PW01.hornershifrin.com:HS IDOT\Documents\230560000-PTB195-007 D1 Paul-Sac Phil SubCollins\CAD Sheets\D162K65 Sacramento\D162K65-sht-xssht-I290.dgn

HORNER SHIFRIN
WWW. HORNERSHIFRIN .COM

USER NAME = bctimmermann	DESIGNED -	REVISED -	
	DRAWN -	REVISED -	
PLOT SCALE = 20.0000 ' / in.	CHECKED -	REVISED -	
PLOT DATE = 9/11/2025	DATE -	REVISED -	

STATE OF ILLINOIS
DEPARTMENT OF TRANSPORTATION

CROSS SECTIONS
I-290 EB

SCALE: | SHEET 4 OF 7 SHEETS | STA. 1063+50.00 TO STA. 1064+00.00

F.A.I RTE.	SECTION	COUNTY	TOTAL SHEETS	SHEET NO.
290	2019-192-B-R	COOK	237	189
		CONTRACT NO. 62K65		
		ILLINOIS	FED. AID PROJECT	

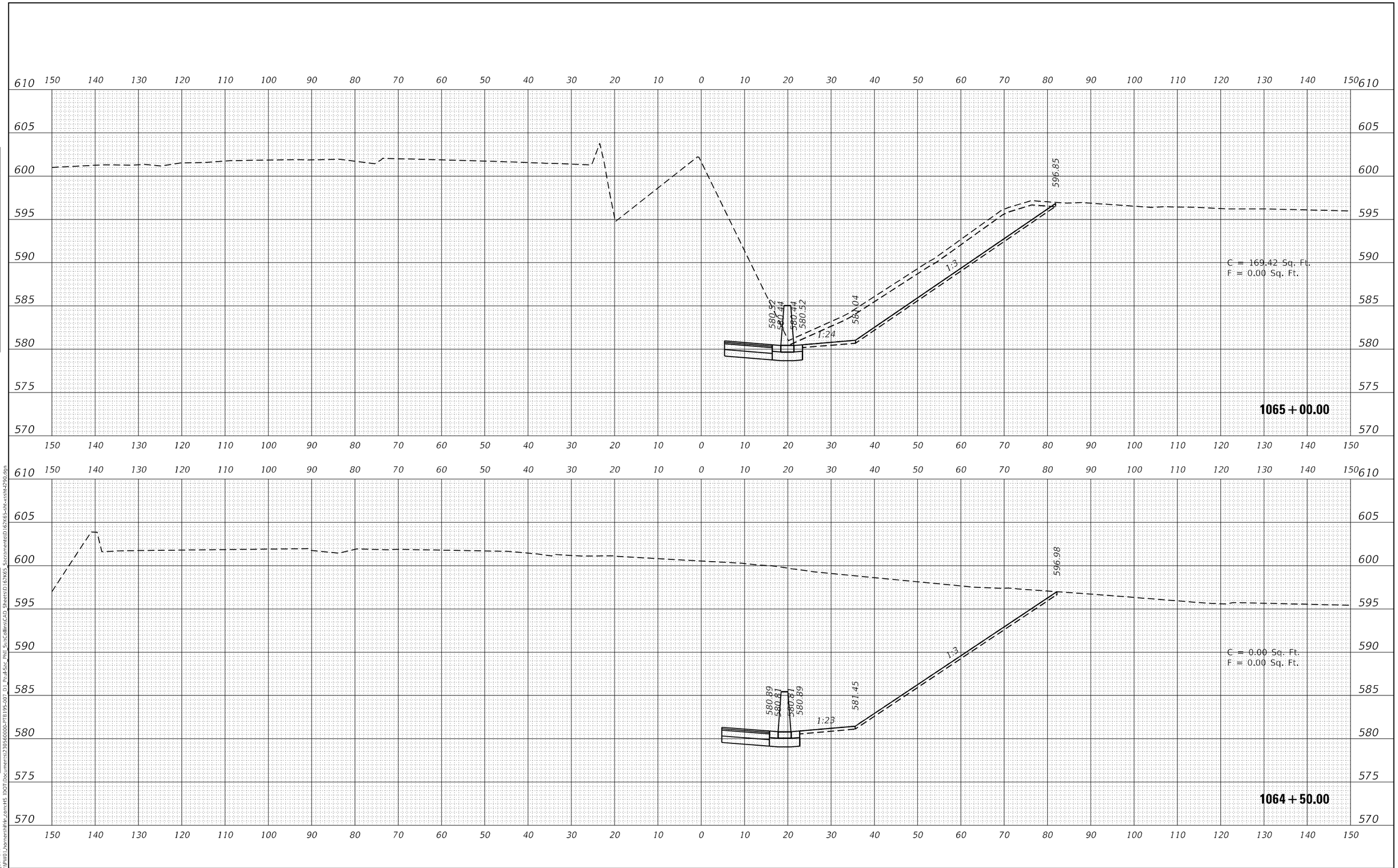

FINAL SURVEY	BY	DATE
NOTE BOOK		SURVEYED
NO.		PLOTTED
		TEMPLATE
		AREAS
		AREAS CHECKED

ORIGINAL SURVEY	BY	DATE
NOTE BOOK		SURVEYED
NO.		PLOTTED
		TEMPLATE
		AREAS
		AREAS CHECKED

MODEL: 290EB_Current
FILE NAME: pw:\\PW01.hornershifrin.com:MS IDOT\Documents\230560000-PTB195-007 D1 Proj\Sac_Phil Sus\Collins\CAD Sheets\D162K65_Sacramento\D162K65-shts-xssht-4290.dgn

HORNER SHIFRIN
WWW. HORNERSHIFRIN .COM

USER NAME = bctimmermann	DESIGNED -	REVISED -
	DRAWN -	REVISED -
PLOT SCALE = 20.0000 ' / in.	CHECKED -	REVISED -
PLOT DATE = 9/11/2025	DATE -	REVISED -

STATE OF ILLINOIS
DEPARTMENT OF TRANSPORTATION

CROSS SECTIONS
I-290 EB

SCALE: | SHEET 5 OF 7 SHEETS | STA. 1064+50.00 TO STA. 1065+00.00

F.A.I RTE.	SECTION	COUNTY	TOTAL SHEETS	SHEET NO.
290	2019-192-B-R	COOK	237	190
		CONTRACT NO. 62K65		
		ILLINOIS	FED. AID PROJECT	

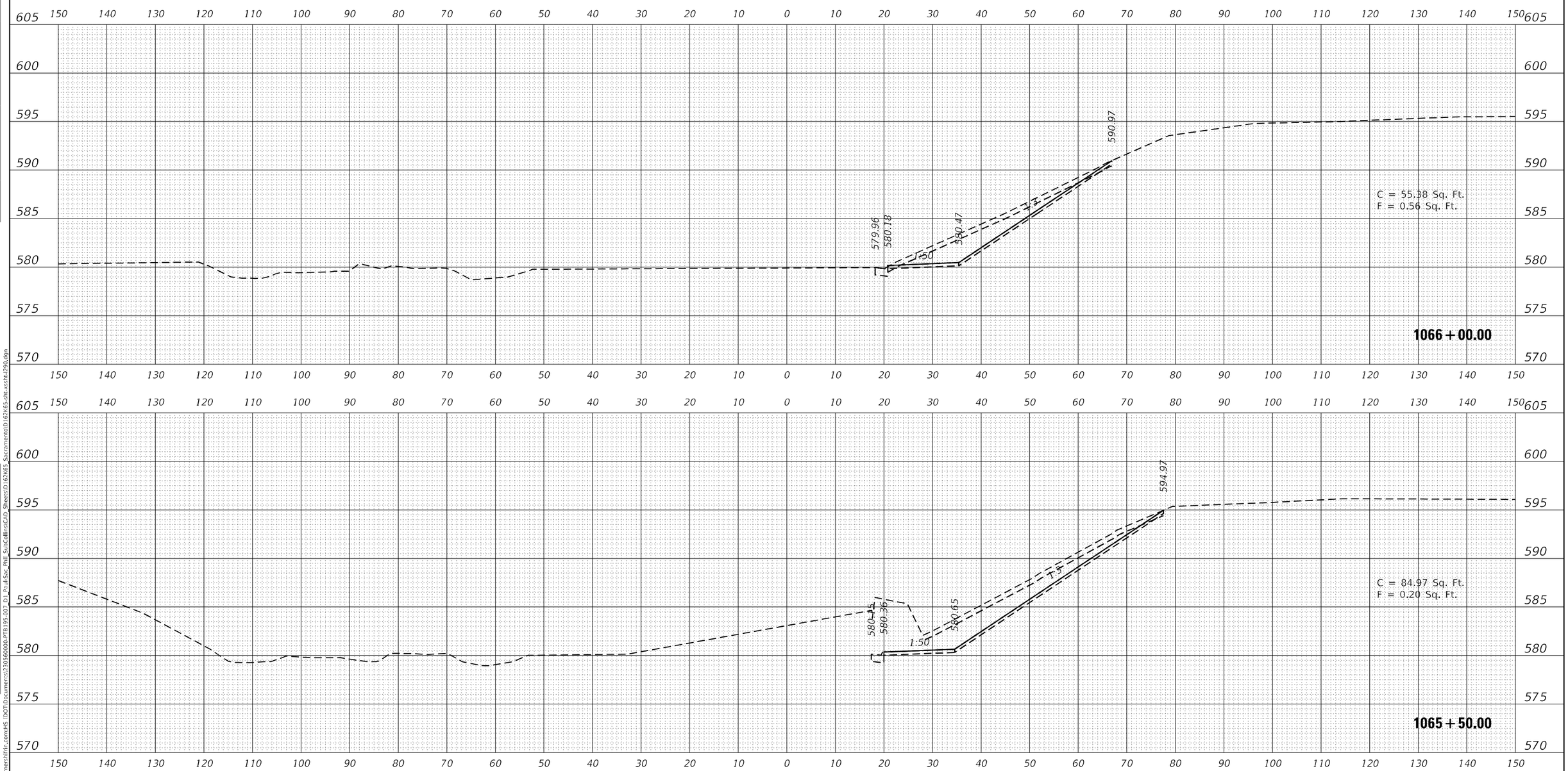

FINAL SURVEY		BY	DATE
NOTE BOOK NO.	SURVEYED		
	PLOTTED		
	TEMPLATE		
	AREAS		
	AREAS CHECKED		

ORIGINAL SURVEY		BY	DATE
NOTE BOOK NO.	SURVEYED		
	PLOTTED		
	TEMPLATE		
	AREAS		
	AREAS CHECKED		

MODEL: 290EB_Current
FILE NAME: pw:\\PWD1.hornershifrin.com:HS IDOT\Documents\230560000-PTB195-007 D1 Paul-Sac Phil SubCollins\CAD Sheets\D162K65 Sacramento\D162K65-sht-xcsht-1290.dgn

HORNER SHIFRIN
WWW. HORNERSHIFRIN .COM

USER NAME = bctimmermann	DESIGNED -	REVISED -	
	DRAWN -	REVISED -	
PLOT SCALE = 20.0000 ' / in.	CHECKED -	REVISED -	
PLOT DATE = 9/11/2025	DATE -	REVISED -	

STATE OF ILLINOIS
DEPARTMENT OF TRANSPORTATION

CROSS SECTIONS
I-290 EB

SCALE: | SHEET 6 OF 7 SHEETS | STA. 1065+50.00 TO STA. 1066+00.00

F.A.I RTE.	SECTION	COUNTY	TOTAL SHEETS	SHEET NO.
290	2019-192-B-R	COOK	237	191
		CONTRACT NO. 62K65		
		ILLINOIS	FED. AID PROJECT	

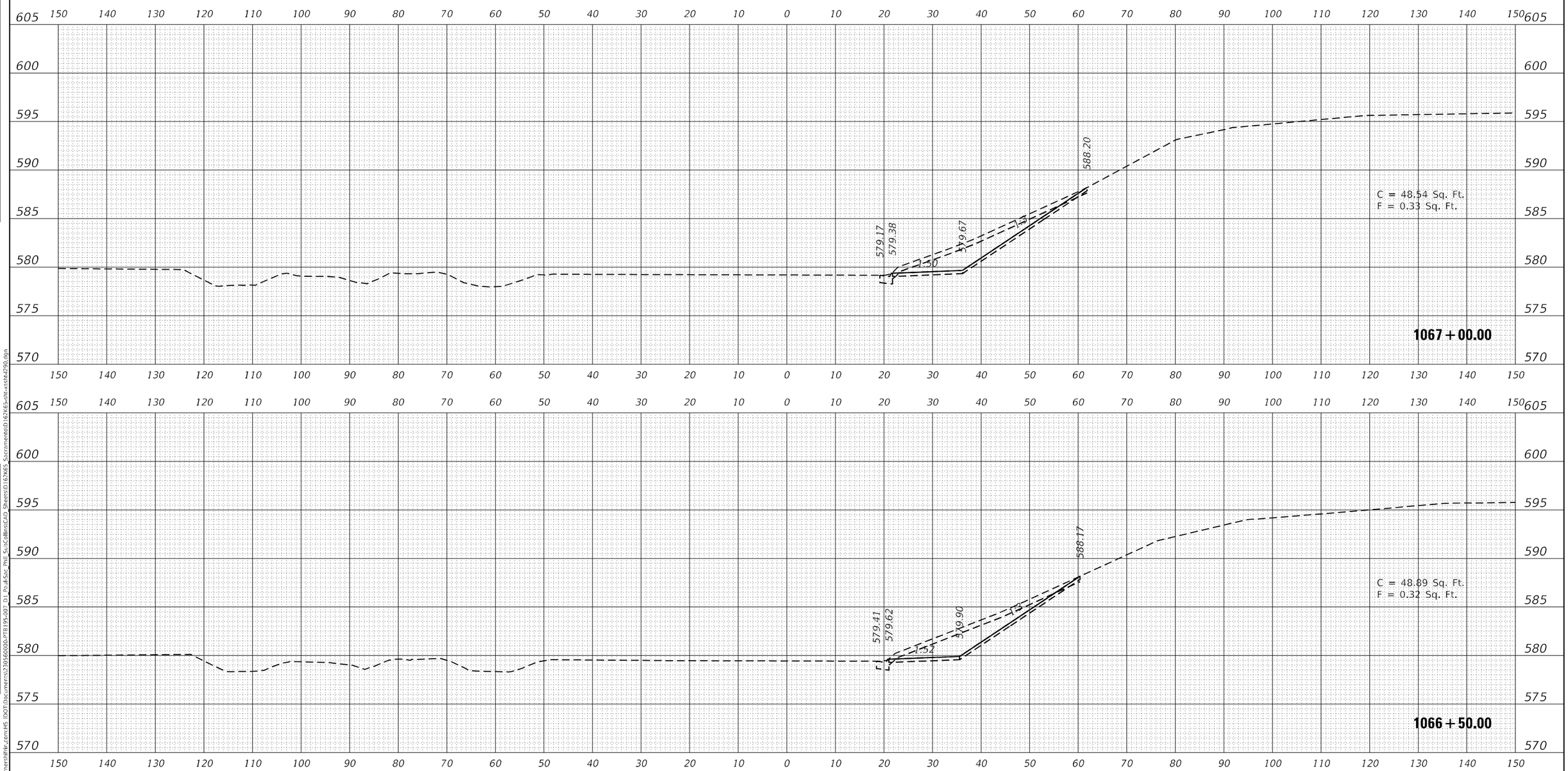

FINAL SURVEY | NOTE BOOK NO. | SURVEYED | PLOTTED | TEMPLATE | AREAS | AREAS CHECKED | BY | DATE

ORIGINAL SURVEY | NOTE BOOK NO. | SURVEYED | PLOTTED | TEMPLATE | AREAS | AREAS CHECKED | BY | DATE

MODEL: 290EB_Current
FILE NAME: pw:\\PWD1.hornershifrin.com:HS IDOT\Documents\230560000-PTB195-007 D1 Paul-Sac Phil SubCollins\CAD Sheets\D162K65 Sacramento\D162K65-sht-xcsht-i290.dgn

HORNER SHIFRIN
WWW. HORNERSHIFRIN .COM

USER NAME = bctimmermann	DESIGNED -	REVISED -	
	DRAWN -	REVISED -	
PLOT SCALE = 20.0000 ' / in.	CHECKED -	REVISED -	
PLOT DATE = 9/11/2025	DATE -	REVISED -	

STATE OF ILLINOIS
DEPARTMENT OF TRANSPORTATION

CROSS SECTIONS
I-290 EB

SCALE: | SHEET 7 OF 7 SHEETS | STA. 1066+50.00 TO STA. 1067+00.00

F.A.I RTE.	SECTION	COUNTY	TOTAL SHEETS	SHEET NO.
290	2019-192-B-R	COOK	237	192
		CONTRACT NO. 62K65		
		ILLINOIS	FED. AID PROJECT	

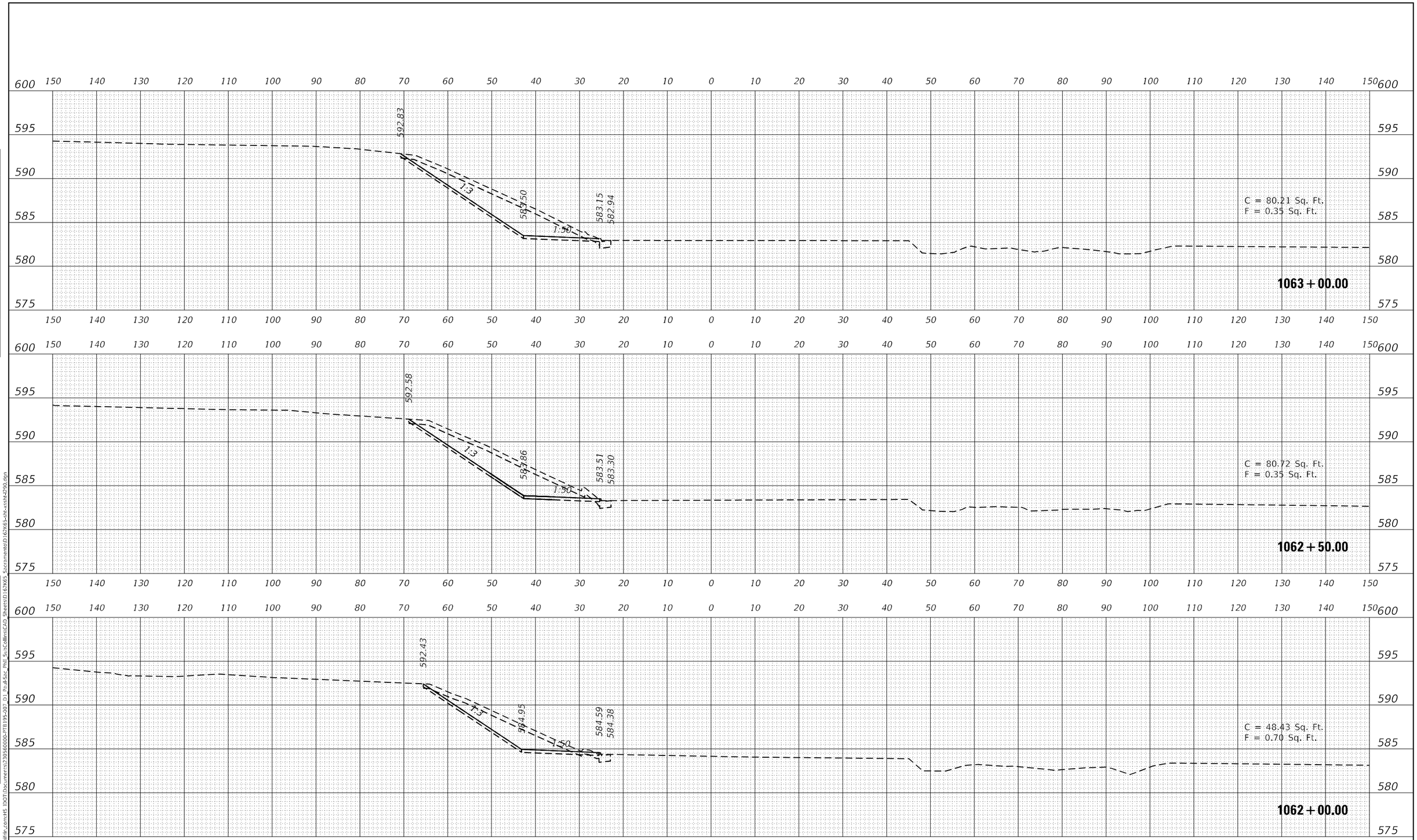

FINAL SURVEY | NOTE BOOK NO. | SURVEYED | PLOTTED | TEMPLATE | AREAS | AREAS CHECKED | BY | DATE

ORIGINAL SURVEY | NOTE BOOK NO. | SURVEYED | PLOTTED | TEMPLATE | AREAS | AREAS CHECKED | BY | DATE

MODEL: 290WB_Current
FILE NAME: pw:\\PWD1.hornershifrin.com:HS IDOT\Documents\230560000-PTB195-007_D1_Paul-Sac_Phil_SubCollins\CAD_Sheets\D162K65_Sacramento\D162K65-sht-xssht-I290.dgn

HORNER SHIFRIN
WWW. HORNERSHIFRIN .COM

USER NAME = bctimmermann	DESIGNED -	REVISED -	
	DRAWN -	REVISED -	
PLOT SCALE = 20.0000 ' / in.	CHECKED -	REVISED -	
PLOT DATE = 9/11/2025	DATE -	REVISED -	

STATE OF ILLINOIS
DEPARTMENT OF TRANSPORTATION

CROSS SECTIONS
I-290 WB

SCALE: | SHEET 1 OF 5 SHEETS | STA. 1062+00.00 TO STA. 1063+00.00

F.A.I RTE.	SECTION	COUNTY	TOTAL SHEETS	SHEET NO.
290	2019-192-B-R	COOK	237	193
		CONTRACT NO. 62K65		
		ILLINOIS	FED. AID PROJECT	

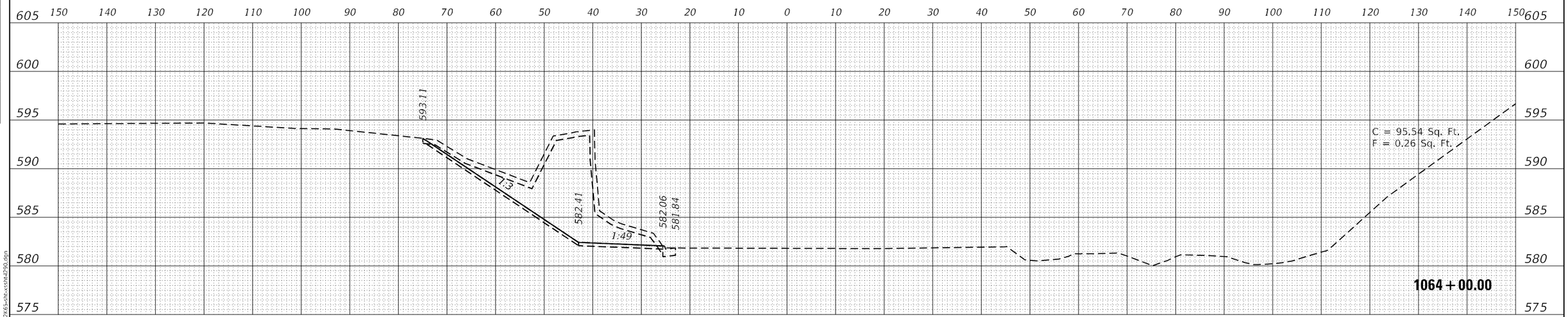

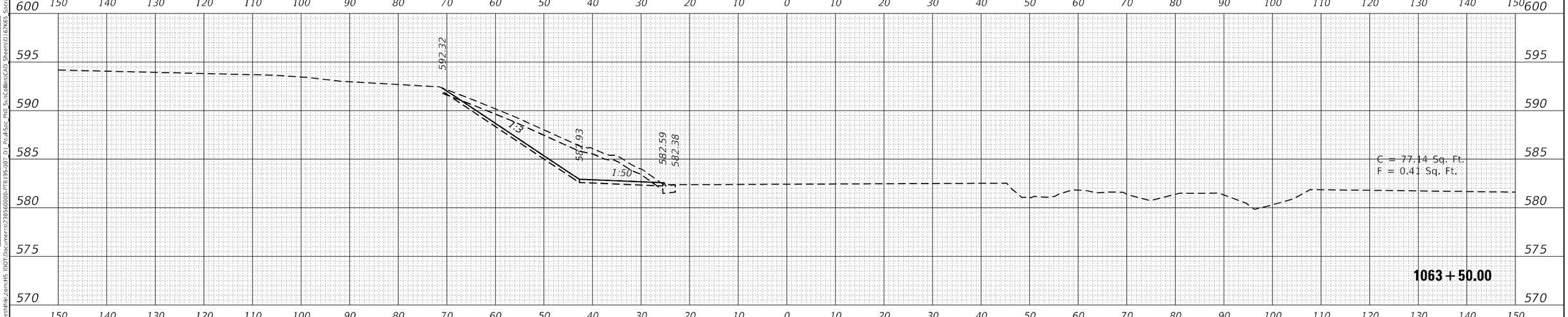

FINAL SURVEY		BY	DATE
NOTE BOOK NO.	SURVEYED		
	PLOTTED		
	TEMPLATE		
	AREAS		
	AREAS CHECKED		

ORIGINAL SURVEY		BY	DATE
NOTE BOOK NO.	SURVEYED		
	PLOTTED		
	TEMPLATE		
	AREAS		
	AREAS CHECKED		

MODEL: 290WB_Current
FILE NAME: pw:\\PW01.hornershifrin.com:HS IDOT\Documents\230560000-PTB195-007 D1 Paul-Sac Phil SuaCollins\CAD Sheets\D162K65 Sacramento\D162K65-sht-xssht-I290.dgn

HORNER SHIFRIN
WWW.HORNERSHIFRIN.COM

USER NAME = bctimmermann	DESIGNED -	REVISED -	
	DRAWN -	REVISED -	
PLOT SCALE = 20.0000 ' / in.	CHECKED -	REVISED -	
PLOT DATE = 9/11/2025	DATE -	REVISED -	

STATE OF ILLINOIS
DEPARTMENT OF TRANSPORTATION

CROSS SECTIONS
I-290 WB

SCALE: | SHEET 2 OF 5 SHEETS | STA. 1063+50.00 TO STA. 1064+00.00

F.A.I RTE.	SECTION	COUNTY	TOTAL SHEETS	SHEET NO.
290	2019-192-B-R	COOK	237	194
		CONTRACT NO. 62K65		
		ILLINOIS	FED. AID PROJECT	

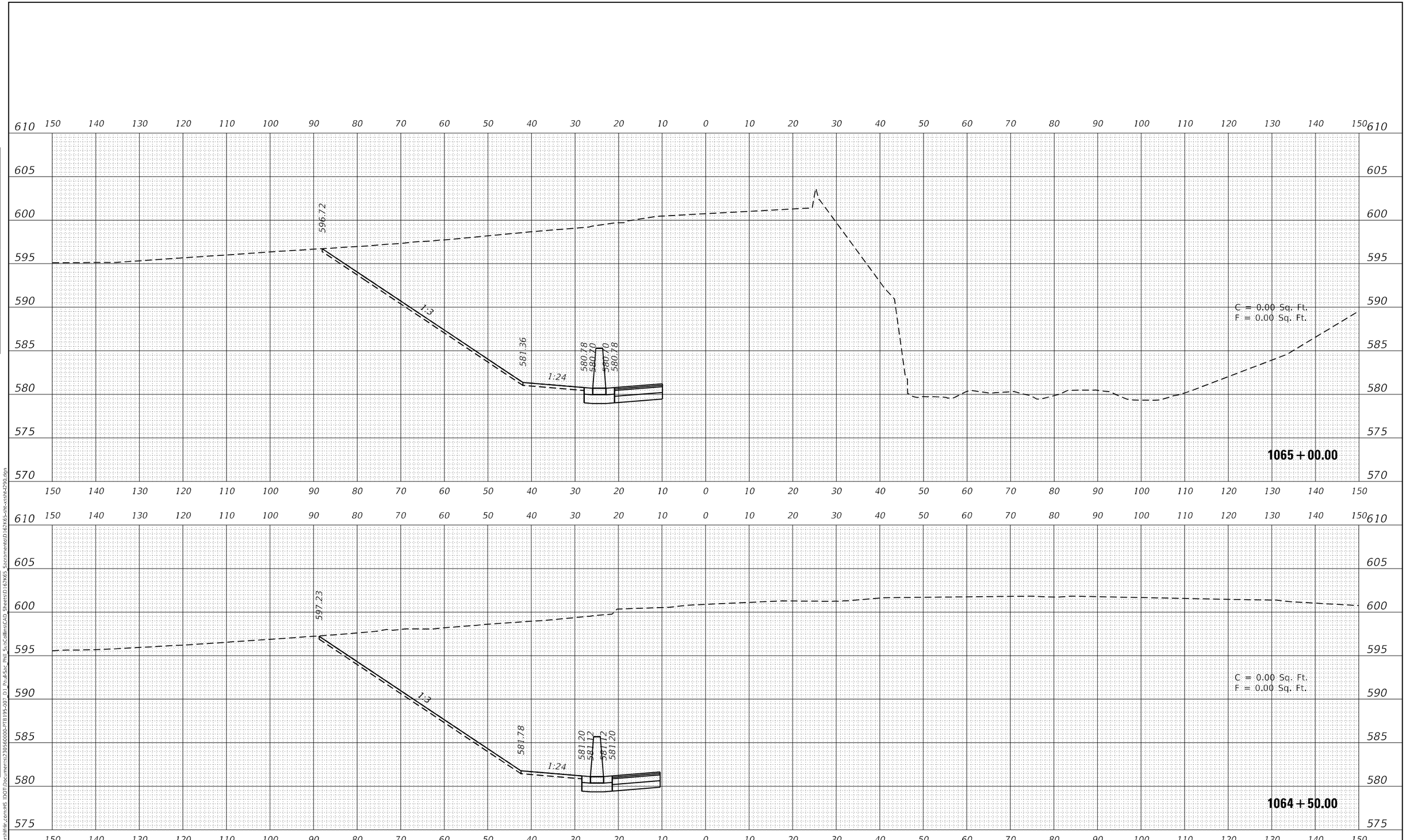

FINAL SURVEY | NOTE BOOK NO. | SURVEYED | PLOTTED | TEMPLATE | AREAS | AREAS CHECKED | BY | DATE

ORIGINAL SURVEY | NOTE BOOK NO. | SURVEYED | PLOTTED | TEMPLATE | AREAS | AREAS CHECKED | BY | DATE

MODEL: 290WB_Current
FILE NAME: pw:\\PW01.hornershifrin.com:HS IDOT\Documents\230560000-PTB195-007 D1 Paul-Sac Phil SubCollins\CAD Sheets\D162K65 Sacramento\D162K65-sht-xcsht-i290.dgn

HORNER SHIFRIN
WWW. HORNERSHIFRIN .COM

USER NAME = bctimmermann	DESIGNED -	REVISED -	
	DRAWN -	REVISED -	
PLOT SCALE = 20.0000 ' / in.	CHECKED -	REVISED -	
PLOT DATE = 9/11/2025	DATE -	REVISED -	

STATE OF ILLINOIS
DEPARTMENT OF TRANSPORTATION

CROSS SECTIONS
I-290 WB

SCALE: | SHEET 3 OF 5 SHEETS | STA. 1064+50.00 TO STA. 10605+00.00

F.A.I RTE.	SECTION	COUNTY	TOTAL SHEETS	SHEET NO.
290	2019-192-B-R	COOK	237	195
		CONTRACT NO. 62K65		
		ILLINOIS	FED. AID PROJECT	

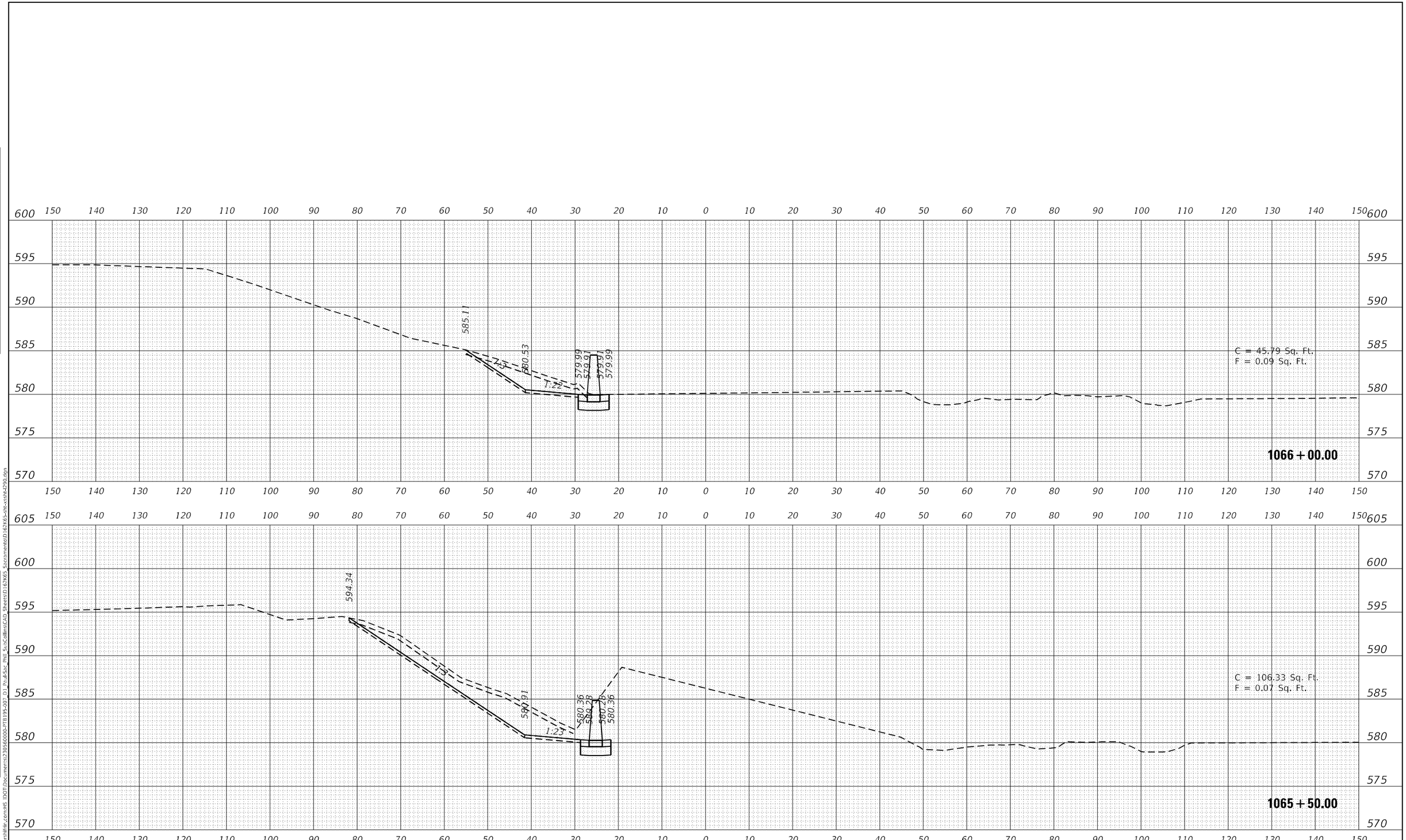

FINAL SURVEY		BY	DATE
NOTE BOOK	SURVEYED		
NO.	PLOTTED		
	TEMPLATE		
	AREAS		
	AREAS CHECKED		

ORIGINAL SURVEY		BY	DATE
NOTE BOOK	SURVEYED		
NO.	PLOTTED		
	TEMPLATE		
	AREAS		
	AREAS CHECKED		

MODEL: 290WB_Current
FILE NAME: pw:\\PW01.hornershifrin.com:HS IDOT\Documents\230560000-PTB195-007 D1 Paul-Sac Phil SubCollins\CAD Sheets\D162K65 Sacramento\D162K65-sht-xcsht-i290.dgn

HORNER SHIFRIN
WWW. HORNERSHIFRIN .COM

USER NAME = bctimmermann	DESIGNED -	REVISED -	
	DRAWN -	REVISED -	
PLOT SCALE = 20.0000 ' / in.	CHECKED -	REVISED -	
PLOT DATE = 9/11/2025	DATE -	REVISED -	

STATE OF ILLINOIS
DEPARTMENT OF TRANSPORTATION

CROSS SECTIONS
I-290 WB

SCALE: | SHEET 4 OF 5 SHEETS | STA. 1065+50.00 TO STA. 1066+00.00

F.A.I RTE.	SECTION	COUNTY	TOTAL SHEETS	SHEET NO.
290	2019-192-B-R	COOK	237	196
		CONTRACT NO. 62K65		
		ILLINOIS	FED. AID PROJECT	

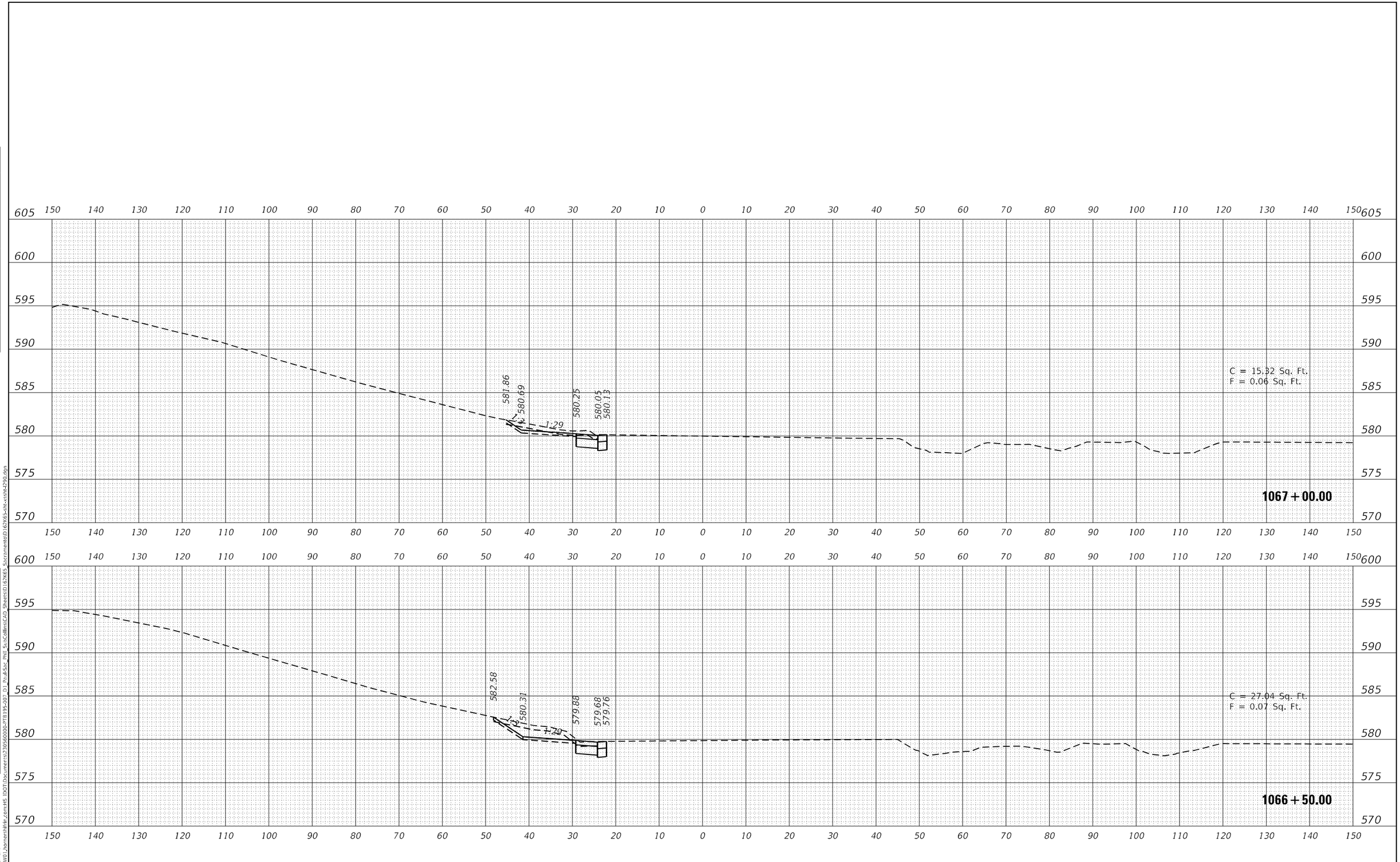

FINAL SURVEY		BY	DATE
NOTE BOOK NO.	SURVEYED		
	PLOTTED		
	TEMPLATE		
	AREAS		
	AREAS CHECKED		

ORIGINAL SURVEY		BY	DATE
NOTE BOOK NO.	SURVEYED		
	PLOTTED		
	TEMPLATE		
	AREAS		
	AREAS CHECKED		

MODEL: 290WB_Current
FILE NAME: pw:\\PW01.hornershifrin.com:HS IDOT\Documents\230560000-PTB195-007 D1 Paul-Sac Phil Sub\Collins\CAD Sheets\D162K65 Sacramento\D162K65-sht-xssht-I290.dgn

HORNER SHIFRIN
WWW. HORNERSHIFRIN .COM

USER NAME = bctimmermann	DESIGNED -	REVISED -	
	DRAWN -	REVISED -	
PLOT SCALE = 20.0000 ' / in.	CHECKED -	REVISED -	
PLOT DATE = 9/11/2025	DATE -	REVISED -	

STATE OF ILLINOIS
DEPARTMENT OF TRANSPORTATION

CROSS SECTIONS
I-290 WB

SCALE: | SHEET 5 OF 5 SHEETS | STA. 1066+50.00 TO STA. 1067+00.00

F.A.I RTE.	SECTION	COUNTY	TOTAL SHEETS	SHEET NO.
290	2019-192-B-R	COOK	237	197
		CONTRACT NO. 62K65		
		ILLINOIS	FED. AID PROJECT	

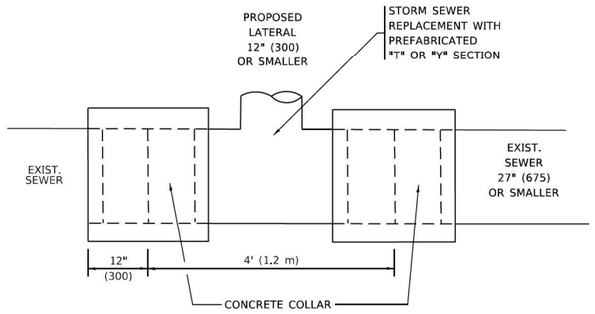

DETAIL "A"

LATERAL CONNECTION TO EXISTING SEWER
OF 27" (675) OR SMALLER

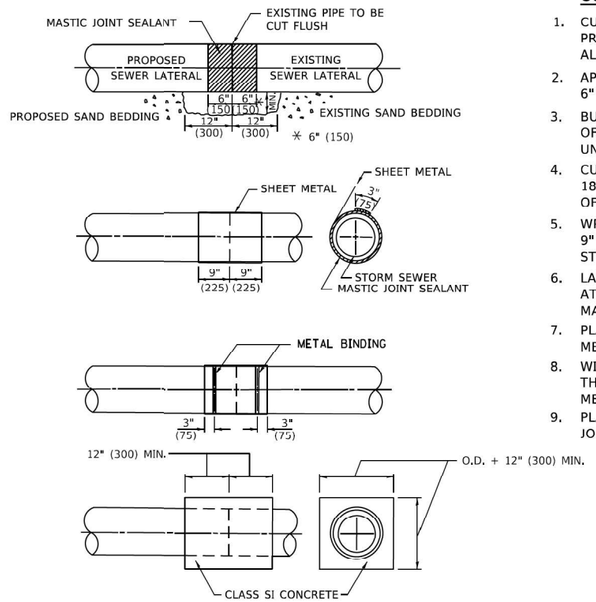

DETAIL "B"

CLASS SI CONCRETE COLLAR

CONSTRUCTION SEQUENCE

1. CUT THE EXISTING END OF THE PIPE SO AS TO PRESENT A FLUSH BUTT JOINT. BRUSH AND CLEAN ALL PIPES.
2. APPLY THE MASTIC JOINT SEALANT TO THE FIRST 6" (150) OF EACH PIPE.
3. BUTT THE PIPES TOGETHER LEAVING A MINIMUM OF 12' x 6' (300 x 150) DEEP EXCAVATION UNDER AND AROUND EACH PIPE END.
4. CUT A PIECE OF SHEET METAL GAGE NO. 19 1.1 (0.0418) 18" (450) WIDE BY THE OUTSIDE CIRCUMFERANCE OF THE PIPE PLUS 3" (75) LONG.
5. WRAP THE SHEET METAL AROUND THE PIPES, 9" (225) ON EACH SIDE OF THE JOINT, STARTING AT THE TOP OF THE PIPE.
6. LAP THE SHEET METAL AT LEAST 3" (75) AT THE TOP OF THE PIPE AND PLACE THE MASTIC JOINT SEALANT BETWEEN THE LAP.
7. PLACE TWO METAL BANDS AROUND THE SHEET METAL AND TIGHTEN.
8. WIPE OFF ANY EXCESS MASTIC JOINT SEALANT THAT OOZES OUT FROM BETWEEN THE SHEET METAL AND THE PIPES.
9. PLACE CLASS SI CONCRETE AROUND THE JOINT.

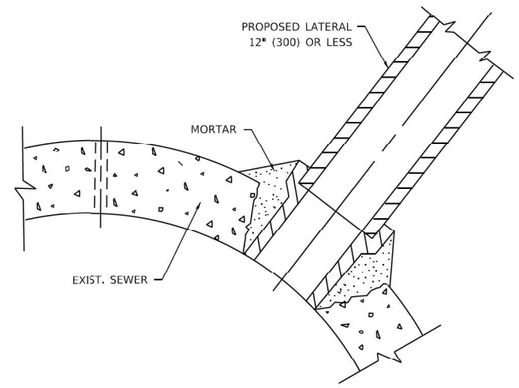

DETAIL "C"

PROPOSED LATERAL
CONNECTION TO EXISTING SEWER
OF 30" (750) OR LARGER

NOTES:

MATERIAL

MATERIAL USED FOR THE TEE OR WYE SECTION SHALL BE COMPATIBLE WITH THE EXISTING STORM SEWER OR THE PROPOSED STORM SEWER.

CONSTRUCTION METHODS

I. THIS WORK SHALL BE CONSTRUCTED IN CONFORMANCE WITH THE APPLICABLE PORTIONS OF SECTION 550 OF THE STANDARD SPECIFICATIONS.

II. CONNECTION TO AN EXISTING STORM SEWER SHALL BE BY EITHER OF THE FOLLOWING METHODS:
- A) PROPOSED STORM SEWER CONNECTION TO EXISTING SEWER OF 27" (675) OR SMALLER SEE DETAIL "A" AND "B".
- B) PROPOSED STORM SEWER CONNECTION TO EXISTING SEWER OF 30" (750) OR LARGER SEE DETAIL "C".

IF THE EXISTING SEWER PIPE IS CRACKED, BROKEN OR OTHERWISE DAMAGED BY THE CONTRACTOR IN MAKING THE CIRCULAR OPENING, THE CONTRACTOR SHALL REPLACE THAT SECTION OF PIPE WITH PIPE EQUAL AND SIMILAR IN ALL RESPECTS TO THE PIPE IN THE EXISTING SEWER, IN A CAREFUL WORKMANLIKE MANNER, WITHOUT EXTRA COMPENSATION.

GENERAL

1. CARE MUST BE TAKEN TO PREVENT DEBRIS FROM ENTERING THE SEWER. ALL DEBRIS WHICH ENTERS THE SEWER MUST BE REMOVED. THE SEWER MUST BE LEFT CLEAN AND UNOBSTRUCTED UPON COMPLETION OF THE CONTRACT.
2. CARE MUST BE TAKEN TO PREVENT ANY PART OF THE NEW PIPE CONNECTION FROM PROJECTING INTO THE EXISTING SEWER.

BASIS OF PAYMENT

1. TEE OR WYE CONNECTIONS SHALL BE PAID FOR AT THE CONTRACT UNIT PRICE EACH FOR STORM SEWER TEE OR WYE OF THE TYPE AND SIZE SPECIFIED IN THE PLANS. THIS PRICE SHALL INCLUDE ALL EXCAVATION OF THE TRENCH, REMOVAL OF THE EXISTING STORM SEWER, FURNISHING AND INSTALLING THE SPECIFIED TEE OR WYE SECTION, FURNISHING AND INSTALLING THE REQUIRED CONCRETE COLLAR, AND ALL OTHER MATERIAL NECESSARY TO COMPLETE THIS WORK AS SHOWN AND SPECIFIED.
2. REMOVAL AND REINSTALLATION OF EXISTING STORM SEWER ADJACENT TO THE PROPOSED TEE OR WYE SECTION, FOR THE PURPOSE OF FACILITATING THE INSTALLATION OF THE TEE OR WYE SECTION, WILL NOT BE PAID FOR SEPARATELY BUT SHALL BE INCLUDED IN THE UNIT PRICE BID FOR THE WORK.
3. TRENCH BACKFILL, EXCAVATION IN ROCK AND REMOVAL AND REPLACEMENT OF UNSUITABLE MATERIAL BELOW PLAN BEDDING GRADE WILL BE PAID FOR SEPARATELY.
4. CONCRETE COLLAR FOR CONNECTING A PROPOSED STORM SEWER TO AN EXISTING STORM SEWER WILL NOT BE PAID PAID FOR SEPARATELY BUT SHALL BE INCLUDED IN THE COST OF THE PROPOSED STORM SEWER.

* ALL DIMENSIONS ARE IN INCHES (MILLIMETERS) UNLESS OTHERWISE SHOWN.

MODEL: Default
FILE NAME: pw:\\dot-pw.bentley.com:PWIDOT\Documents\IDOT Offices\District 1\Projects\Dist\Std22x34\CADData\CADSheets\bd07.dgn

USER NAME = Lawrence.DeManche	DESIGNED - M. DE YONG	REVISED - R. SHAH 09-09-94	
	DRAWN -	REVISED - R. SHAH 10-25-94	
PLOT SCALE = 100.0000 ' / In.	CHECKED -	REVISED - R. SHAH 06-12-96	
PLOT DATE = 11/18/2022	DATE - 07-25-90	REVISED - K. SMITH 11-18-22	

STATE OF ILLINOIS
DEPARTMENT OF TRANSPORTATION

DETAIL OF STORM SEWER CONNECTION TO EXISTING SEWER

SCALE: NONE | SHEET 1 OF 1 SHEETS | STA. | TO STA.

F.A.I RTE.	SECTION	COUNTY	TOTAL SHEETS	SHEET NO.
290	2019-192-B-R	COOK	237	198
	BD500-01 (BD-07)	CONTRACT NO. 62K65		
	ILLINOIS FED. AID PROJECT			

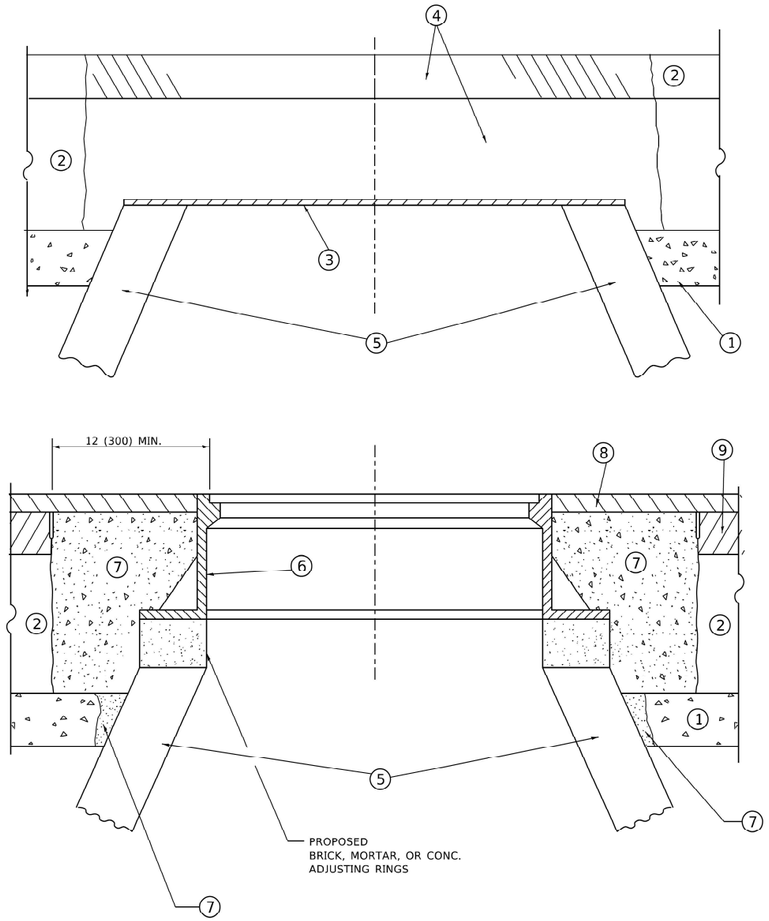

DETAILS FOR FRAMES AND LIDS ADJUSTMENT WITH MILLING

NOTES

1. EXISTING BROKEN FRAMES AND LIDS SHALL BE REMOVED AND DISPOSED OF BY THE CONTRACTOR AND SHALL BE REPLACED AS DIRECTED BY THE ENGINEER. REPLACEMENT FRAMES AND LIDS WILL BE PAID FOR IN ACCORDANCE WITH ARTICLE 109.04 OF THE STANDARD SPECIFICATIONS UNLESS A SEPARATE PAY ITEM HAS BEEN PROVIDED.
2. IF THE EXISTING LIDS ARE OPEN, THE FRAME WILL BE ADJUSTED TO THE ELEVATION OF THE MILLED PAVEMENT SURFACE PRIOR TO THE MILLING OPERATION. THE FRAME WILL NOT BE REMOVED AND COVERED BY THE METAL PLATE.
3. CITY OF CHICAGO CASTINGS ARE THE PROPERTY OF THE CITY AND THE CONTRACTOR SHALL NOTIFY THE CITY FOR REMOVAL AND DISPOSITION OF THE CASTINGS.
4. THE METAL PLATE USED TO COVER THE STRUCTURE SHALL REMAIN THE PROPERTY OF THE CONTRACTOR.
5. THE CONTRACTOR SHALL REMOVE ALL TRAFFIC CONTROL DEVICES BY THE END OF EACH WORK SHIFT.

CONSTRUCTION PROCEDURES

STAGE 1 (BEFORE PAVEMENT MILLING)

A) REMOVE A MINIMUM OF 12 (300) OF THE PAVEMENT FROM AROUND THE STRUCTURE.

B) REMOVE THE EXISTING FRAME AND LID FROM THE STRUCTURE.

C) COVER THE STRUCTURE OPENING WITH A 36 (900) DIAMETER METAL PLATE.

D) BACKFILL WITH CRUSHED STONE AND HMA SURFACE MIX APPROVED BY THE ENGINEER. (MIN. 3 (80) HMA TO REMAIN AFTER MILLING).

STAGE 2 (AFTER PAVEMENT MILLING)

A) REMOVE THE HMA SURFACE MIX AND CRUSHED STONE.

B) INSTALL THE FRAME AND LID; ADJUST THE FRAME TO ITS FINAL SURFACE ELEVATION.

C) THE SURROUNDING SPACE SHALL BE FILLED WITH CLASS PP-2* CONCRETE TO THE ELEVATION OF THE SURFACE OF THE EXISTING BASE COURSE OR THE BINDER COURSE.

*UNLESS OTHERWISE SPECIFIED IN THE PLANS.

THE PROCEDURE EXPLAINED ABOVE SHALL CONFORM TO THE APPLICABLE PORTIONS OF SECTIONS 353, 406, 602, AND 603 OF THE STANDARD SPECIFICATIONS EXCEPT THAT "THE CONTRACTOR SHALL ADJUST THE STRUCTURES TO THE FINISHED PAVEMENT ELEVATION NO MORE THAN 5 CALENDAR DAYS PRIOR TO PLACEMENT OF THE FINAL LIFT OF SURFACE UNLESS APPROVED BY THE ENGINEER."

LEGEND

1. SUB-BASE GRANULAR MATERIAL
2. EXISTING PAVEMENT
3. 36 (900) DIAMETER METAL PLATE
4. PROPOSED CRUSHED STONE AND HMA SURFACE MIX
5. EXISTING STRUCTURE
6. FRAME AND LID (SEE NOTES)
7. CLASS PP-2* CONCRETE
8. PROPOSED HMA SURFACE COURSE
9. PROPOSED HMA BINDER COURSE

LOCATION OF STRUCTURES

THE CONTRACTOR WILL BE REQUIRED TO KEEP A RECORD OF THE LOCATIONS OF THE BURIED STRUCTURES ACCORDING TO THE STATION AND DISTANCE LEFT OR RIGHT OF THE CENTERLINE OF PAVEMENT. UPON COMPLETION OF THE WORK, THE CONTRACTOR WILL DELIVER THE RECORD TO THE ENGINEER.

BASIS OF PAYMENT

1. REMOVING FRAMES AND LIDS ON DRAINAGE AND UTILITY STRUCTURES IN THE PAVEMENT PRIOR TO MILLING, AND ADJUSTING TO FINAL GRADE PRIOR TO PLACING THE SURFACE COURSE, WILL BE PAID FOR AT THE CONTRACT UNIT PRICE EACH FOR "FRAMES AND LIDS TO BE ADJUSTED (SPECIAL)."
2. THIS WORK WILL NOT BE PAID FOR WHEN DRAINAGE AND UTILITY STRUCTURES ARE SPECIFIED FOR PAYMENT AS STRUCTURE RECONSTRUCTION.
3. NEW FRAMES AND LIDS, WHEN SPECIFIED, WILL BE PAID FOR SEPARATELY.
4. WHEN STRUCTURES ARE TO BE ADJUSTED OR RECONSTRUCTED, THE LOWERING AND RAISING OF THE FRAMES AND LIDS WILL NOT BE PAID FOR SEPARATELY BUT WILL BE INCLUDED IN THE COST OF THE CORRESPONDING PAY ITEM.

ALL DIMENSIONS ARE IN INCHES (MILLIMETERS) UNLESS OTHERWISE SHOWN

MODEL: Default
FILE NAME: W:\dist\std\22x34\bd08.dgn

USER NAME = Lawrence.DeManche	DESIGNED - R. SHAH	REVISED - R. BORO 03-09-11
	DRAWN -	REVISED - R. BORO 12-06-11
PLOT SCALE = 100.0000 ' / in.	CHECKED -	REVISED - K. SMITH 11-18-22
PLOT DATE = 9/15/2023	DATE - 10-25-94	REVISED - K. SMITH 09-15-23

STATE OF ILLINOIS
DEPARTMENT OF TRANSPORTATION

DETAILS FOR FRAMES AND LIDS ADJUSTMENT WITH MILLING

SCALE: NONE | SHEET 1 OF 1 SHEETS | STA. | TO STA.

F.A. RTE.	SECTION	COUNTY	TOTAL SHEETS	SHEET NO.
290	2019-192-B-R	COOK	237	199
	BD600-03 (BD-08)	CONTRACT NO. 62K65		
	ILLINOIS FED. AID PROJECT			

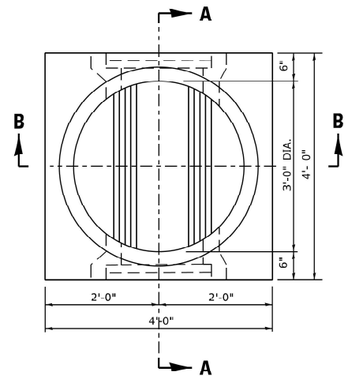

PLAN

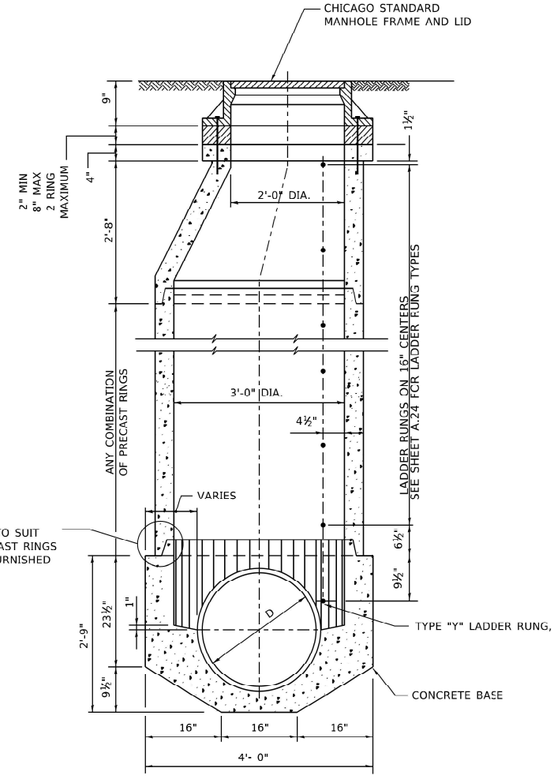

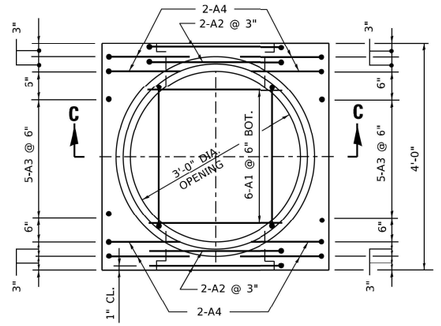

PLAN
PRECAST BASE

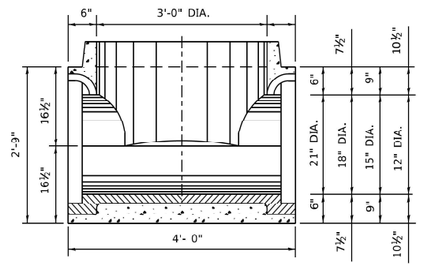

SECTION A–A

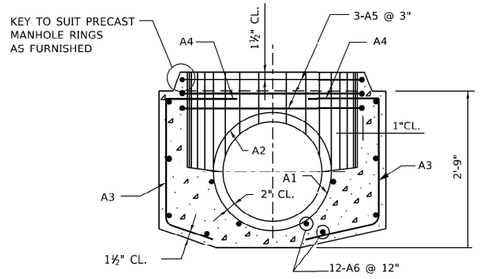

SECTION B–B

SECTION C–C

NOTE:
6" MINIMUM GRANULAR EMBEDMENT
UNDER ALL PRECAST MANHOLE BASES

SCHEDULE OF REINFORCEMENT

STRUCTURE		REINFORCEMENT BAR							BENDING DIMENSIONS											
		MARK	SIZE NO.	TYPE	LENGTH	NO. REQD.	WEIGHT - LBS EACH	WEIGHT - LBS TOTAL	A	B	C	D	E	F	G	H	J	K	O	R
BASES FOR TYPE "A" MANHOLES (PRECAST)	21" DIA.	21A1	6	9	3'-1"	6	4.63	28		3'-1"						11¼"			2'-1"	12¾"
		21A2	6	T3	8'-8"	4	13.02	52										2'-0"	2'-1½"	
		21A3	5	12	3'-3"	10	3.39	34			22"	17"				14½"		8¾"		
		21A4	5	12	4'-6"	8	4.69	30		15"	22"	17"				14½"		8¾"		
		21A5	5	T3	11'-11"	3	12.43	37										20"	3'-3¼"	
		21A6	4	STR	3'-8"	12	2.45	30												
		TOTAL						219												
	18" DIA.	18A1	6	9	2'-8½"	6	4.07	24		2'-8½"							9¾"		22"	11¼"
		18A2	6	T3	7'-10½"	4	11.83	47										2'-0"	22½"	
		18A3	5	12	3'-3"	10	3.39	34			22"	17"					14½"	8¾"		
		18A4	5	12	4'-6"	8	4.69	38		15"	22"	17"					14½"	8¾"		
		18A5	5	T3	11'-11"	3	12.43	37										2'-0"	3'-3¼"	
		18A6	4	STR	3-8"	12	2.45	30												
		TOTAL						202												
	15" DIA.	15A1	6	9	2'-3½"	6	3.44	21		23½"						8¼"			19"	9¾"
		15A2	6	T3	7'-1"	4	10.64	42										2'-0"	19½"	
		15A3	5	12	3'-3"	10	3.39	34			22"	17"						8¾"		
		15A4	5	12	4'-6"	8	4.69	38		15"	22"	17"				14½"		8¾"		
		15A5	5	T3	11'-11"	3	12.43	37								14½"		20"	3'-3¾"	
		15A6	4	STR	3'-8"	12	2.45	30												
		TOTAL						202												
	12" DIA.	12A1	6	9	1'-11"	6	2.88	17		23"						6¾"			16"	8¼"
		12A2	6	T3	6'-1"	4	9.14	37										2'-0"	16½"	
		12A3	5	12	3'-3"	10	3.39	34			22"	17"				14½"		8¾"		
		12A4	5	12	4'-6"	8	4.69	38			22"	17"				14½"		8¾"		
		12A5	5	T3	11'-11"	3	12.43	37										20"	3'-3¼"	
		12A6	4	STR.	3'-8"	12	2.45	30												
		TOTAL						193												

MODEL: Default
FILE NAME: pw:\\dot-pw.bentley.com:PWIDOT\Documents\IDOT Offices\District 1\Projects\Dist51d22x34\CADData\CADsheets\ts009.dgn

USER NAME = Lawrence.DeManche	DESIGNED -	REVISED - K. SMITH 09-22-90	**STATE OF ILLINOIS** **DEPARTMENT OF TRANSPORTATION**
	DRAWN -	REVISED - K. SMITH 11-18-22	
PLOT SCALE = 100.0000 ' / in.	CHECKED -	REVISED -	
PLOT DATE = 11/18/2022	DATE - 06-18-82	REVISED -	

CITY OF CHICAGO DRAINAGE DETAILS
TYPE "A" PRECAST MANHOLE FOR SEWERS 21" DIA. AND SMALLER

SCALE: NONE | SHEET 1 OF 1 SHEETS | STA. | TO STA.

F.A. RTE.	SECTION	COUNTY	TOTAL SHEETS	SHEET NO.
290	2019-192-B-R	COOK	237	200
	BD600–12 (BD–09)	CONTRACT NO. 62K65		
	ILLINOIS FED. AID PROJECT			

NUMBER OF PRECAST RINGS REQUIRED FOR MANHOLES OF VARIOUS HEIGHTS

TOTAL HEIGHT "H"	9" FRAME +2'-8" CORDEL =3'-5"	PRECAST RINGS					BRICK AND/OR MORTAR	TOTAL HEIGHT "H"	9" FRAME +2'-8" CORBEL =3'-5"	PRECAST RINGS					BRICK AND/OR MORTAR	TOTAL HEIGHT "H"	9" FRAME +2'-8" CORBEL =3'-5"	PRECAST RINGS					BRICK AND/OR MORTAR
		4'-0"	2'-8"	1'-4"	8"	4"				4'-0"	2'-8"	1'-4"	8"	4"				4'-0"	2'-8"	1'-4"	8"	4"	
5'-0"	3'-5"			1			3"	12'-0"	3'-5"	2				1	3"	19'-0"	3'-5"	3	1		1		3"
1"	"			1			4"	1"	"	2				1	4"	1"	"	3	1		1		4"
2"	"			1		1	1"	2"	"	2			1		1"	2"	"	3	1		1	1	1"
3"	"			1		1	2"	3"	"	2			1		2"	3"	"	3	1		1	1	2"
4"	"			1		1	3"	4"	"	2			1		3"	4"	"	3	1		1	1	3"
5"	"			1		1	4"	5"	"	2			1		4"	5"	"	3	1		1	1	4"
6"	"			1			1"	6"	"	2			1	1	1"	6"	"	4					1"
7"	"			1			2"	7"	"	2			1	1	2"	7"	"	4					2"
8"	"			1			3"	8"	"	2			1	1	3"	8"	"	4					3"
9"	"			1			4"	9"	"	2			1	1	4"	9"	"	4					4"
10"	"			1		1	1"	10"	"	2				1	1"	10"	"	4				1	1"
11"	"			1		1	2"	11"	"	2				1	2"	11"	"	4				1	2"
6'-0"	3'-5"			1		1	3"	13'-0"	3'-5"	2			1		3"	20'-0"	3'-5"	4				1	3"
1"	"			1		1	4"	1"	"	2			1		4"	1"	"	4				1	4"
2"	"		1		1		1"	2"	"	2			1	1	1"	2"	"	4			1		1"
3"	"		1		1		2"	3"	"	2			1	1	2"	3"	"	4			1		2"
4"	"		1		1		3"	4"	"	2			1	1	3"	4"	"	4			1		3"
5"	"		1		1		4"	5"	"	2			1	1	4"	5"	"	4			1		4"
6"	"		1		1	1	1"	6"	"	2			1	1	1"	6"	"	4			1	1	1"
7"	"		1		1	1	2"	7"	"	2			1	1	2"	7"	"	4			1	1	2"
8"	"		1		1	1	3"	8"	"	2			1	1	3"	8"	"	4			1	1	3"
9"	"		1		1	1	4"	9"	"	2			1	1	4"	9"	"	4			1	1	4"
10"	"		1		1		1"	10"	"	2			1	1	1"	10"	"	4		1			1"
11"	"		1		1		2"	11"	"	2			1	1	2"	11"	"	4		1			2"
7'-0"	3'-5"		1		1		3"	14'-0"	3'-5"	2			1	1	3"	21'-0"	3'-5"	4		1			3"
1"	"		1		1		4"	1"	"	2			1	1	4"	1"	"	4		1			4"
2"	"		1		1	1	1"	2"	"	2	1				1"	2"	"	4		1		1	1"
3"	"		1		1	1	2"	3"	"	2	1				2"	3"	"	4		1		1	2"
4"	"		1		1	1	3"	4"	"	2	1				3"	4"	"	4		1		1	3"
5"	"		1		1	1	4"	5"	"	2	1				4"	5"	"	4		1		1	4"
6"	"	1					1"	6"	"	2	1			1	1"	6"	"	4		1	1		1"
7"	"	1					2"	7"	"	2	1			1	2"	7"	"	4		1	1		2"
8"	"	1					3"	8"	"	2	1			1	3"	8"	"	4		1	1		3"
9"	"	1					4"	9"	"	2	1			1	4"	9"	"	4		1	1		4"
10"	"	1				1	1"	10"	"	2	1		1		1"	10"	"	4		1	1	1	1"
11"	"	1				1	2"	11"	"	2	1		1		2"	11"	"	4		1	1	1	2"
8'-0"	3'-5"	1				1	3"	15' 0"	3' 5"	2	1		1		3"	22' 0"	3' 5"	4		1	1	1	3"
1"	"	1				1	4"	1"	"	2	1		1		4"	1"	"	4		1	1	1	4"
2"	"	1					1"	2"	"	2	1		1	1	1"	2"	"	4	1				1"
3"	"	1					2"	3"	"	2	1		1	1	2"	3"	"	4	1				2"
4"	"	1					3"	4"	"	2	1		1	1	3"	4"	"	4	1				3"
5"	"	1					4"	5"	"	2	1		1	1	4"	5"	"	4	1				4"
6"	"	1				1	1"	6"	"	3					1"	6"	"	4	1			1	1"
7"	"	1				1	2"	7"	"	3					2"	7"	"	4	1			1	2"
8"	"	1				1	3"	8"	"	3					3"	8"	"	4	1			1	3"
9"	"	1				1	4"	9"	"	3					4"	9"	"	4	1			1	4"
10"	"	1		1			1"	10"	"	3				1	1"	10"	"	4	1		1		1"
11"	"	1		1			2"	11"	"	3				1	2"	11"	"	4	1		1		2"
9'-0"	3'-5"	1		1			3"	16'-0"	3'-5"	3				1	3"	23'-0"	3'-5"	4	1		1		3"
1"	"	1		1			4"	1"	"	3				1	4"	1"	"	4	1		1		4"
2"	"	1		1		1	1"	2"	"	3			1		1"	2"	"	4	1		1	1	1"
3"	"	1		1		1	2"	3"	"	3			1		2"	3"	"	4	1		1	1	2"
4"	"	1		1		1	3"	4"	"	3			1		3"	4"	"	4	1		1	1	3"
5"	"	1		1		1	4"	5"	"	3			1		4"	5"	"	4	1		1	1	4"
6"	"	1		1			1"	6"	"	3			1	1	1"	6"	"	5					1"
7"	"	1		1			2"	7"	"	3			1	1	2"	7"	"	5					2"
8"	"	1		1			3"	8"	"	3			1	1	3"	8"	"	5					3"
9"	"	1		1			4"	9"	"	3			1	1	4"	9"	"	5					4"
10"	"	1		1		1	1"	10"	"	3	1			1	1"	10"	"	5					1"
11"	"	1		1		1	2"	11"	"	3	1			1	2"	11"	"	5					2"
8'-0"	3'-5"	1		1			3"	15' 0"	3' 5"	3	1			1	3"	22' 0"	3' 5"	5					3"
1"	"	1		1			4"	1"	"	3	1			1	4"	1"	"	5					4"
2"	"	1		1		1	1"	2"	"	3	1				1"	2"	"	5		1		1	1"
3"	"	1		1		1	2"	3"	"	3	1				2"	3"	"	5		1		1	2"
4"	"	1		1		1	3"	4"	"	3	1				3"	4"	"	5		1		1	3"
5"	"	1		1		1	4"	5"	"	3	1				4"	5"	"	5		1		1	4"
6"	"	2					1"	6"	"	3	1			1	1"	6"	"	5		1	1		1"
7"	"	2					2"	7"	"	3	1			1	2"	7"	"	5		1	1		2"
8"	"	2					3"	8"	"	3	1			1	3"	8"	"	5		1	1		3"
9"	"	2					4"	9"	"	3	1			1	4"	9"	"	5		1	1		4"
10"	"	2				1	1"	10"	"	3	1		1		1"	10"	"	5		1	1	1	1"
11"	"	2				1	2"	11"	"	3	1		1		2"	11"	"	5		1	1	1	2"

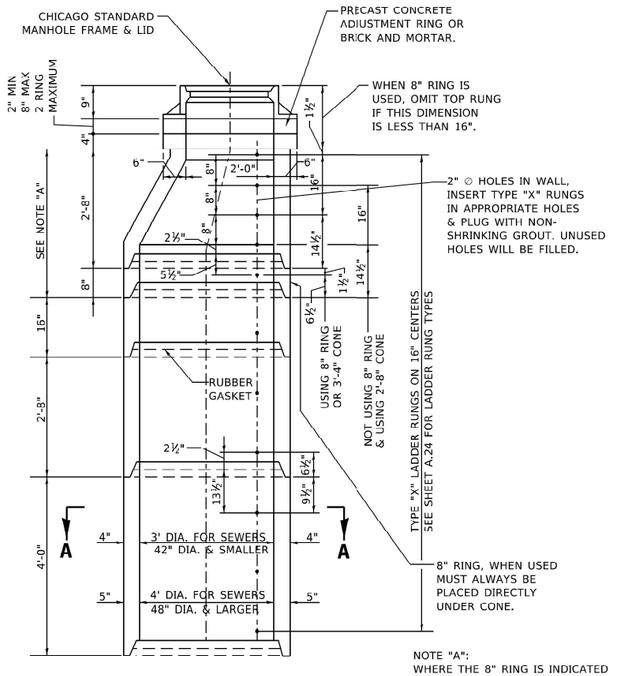

NOTE "A":
WHERE THE 8" RING IS INDICATED A SEPARATE ONE PIECE CONE 3'-4" IN HEIGHT MAY BE USED AS AN ALTERNATE.

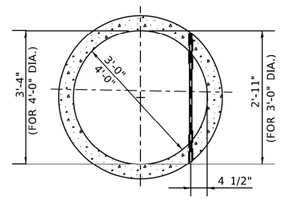

1" ∅ LADDER RUNG,TYPE "X", LENGTH 2'-11" OR 3'-4" INSERTED INTO 2" ∅ HOLE IN WALL & PLUGGED BY MANUFACTURER WITH NON-SHRINKING GROUT.

SECTION A–A

DETAIL OF PRECAST RINGS

NOTES:

PRECAST CONCRETE RINGS MUST CONFORM TO A.S.T.M. DESIGNATION C76 FOR "REINFORCED CONCRETE CULVERT STORM DRAIN, AND SEWER PIPE." WALL B.

STANDARD LENGTHS OF RINGS ARE: 4'-0", 2'-8". 1'-4", 0'-8" AND 0'-4" COLLAR.

ALL REINFORCEMENT STEEL REQUIRED FOR PRECAST RINGS MUST BE INCLUDED IN THE PRICE BID FOR ALL MANHOLE ITEMS.

ALL PIPE AND FITTINGS 24 INCHES IN DIAMETER AND LARGER MUST BE CLASS III, IV AND V.

REINFORCED CONCRETE PIPE AS SPECIFIED IN THE SPECIFICATIONS FOR "REINFORCED CONCRETE CULVERT STORM DRAIN, AND SEWER PIPE." A.S.T.M. DESIGNATION C76, TABLE III, IV AND V, WALL B OR WALL C WITH CIRCULAR OR ELLIPTICAL REINFORCEMENT

MODEL: Default
FILE NAME: pw:\\dot-pw.bentley.com:PWIDOT\Documents\IDOT Offices\District 1\Projects\Std 22x34\CAD\Data\CADsheets\sd09.dgn

USER NAME = Lawrence.DeManche	DESIGNED -	REVISED -	K. SMITH 09-22-90
	DRAWN -	REVISED -	K. SMITH 11-18-22
PLOT SCALE = 100.0000 ' / in.	CHECKED -	REVISED -	
PLOT DATE = 11/18/2022	DATE - 06-18-82	REVISED -	

STATE OF ILLINOIS
DEPARTMENT OF TRANSPORTATION

CITY OF CHICAGO DRAINAGE DETAILS
TYPE "A" MANHOLE PRECAST RISERS, AND RINGS 24" AND LARGER

SCALE: NONE | SHEET 1 OF 1 SHEETS | STA. | TO STA.

F.A. RTE.	SECTION	COUNTY	TOTAL SHEETS	SHEET NO.
290	2019-192-B-R	COOK	237	201
	BD600–12 (BD–09)	CONTRACT NO. 62K65		
	ILLINOIS FED. AID PROJECT			

STRUCTURE		REINFORCEMENT BAR						BENDING DIMENSIONS											
	MARK	SIZE NO.	TYPE	LENGTH	NO. REQD.	WEIGHT - LBS EACH	TOTAL	A	B	C	D	E	F	G	H	J	K	O	R
BASES FOR TYPE "A" MANHOLES (Precast) 36" DIA.	36A1	6	T3	12'-7"	6	18.90	113										2'-0"	3'-4½"	
	36A2	5	9	6'-0"	4	6.26	25		6'-0"						2'-2"			3'-0"	20"
	36A3	5	12	4'-6"	4	4.69	19			2'-9"	21"				18"		10⅛"		
	36A4	5	12	5'-0"	5	5.22	26		7"	3'-0"	17"				14½"		8⅞"		
	36A5	5	12	5'-9"	5	6.00	30		15"	2'-9"	21"				18"		10⅛"		
	36A6	5	T3	11'-11"	3	12.43	37										20"	3'-3½"	
	36A7	5	12	5'-8"	5	5.91	30		15"	3'-0"	17"				14½"		8¼"		
	36A8	4	STR.	4'-0"	10	3.12	56												
	TOTAL						336												
30" DIA	30A1	6	T3	11'-1"	6	16.65	100										2'-0"	2'-10½"	
	30A2	5	9	4'-4"	4	4.52	18		4'-4"						18"			2'-10"	17"
	30A3	5	12	4'-0"	4	4.17	17			2'-3"	21"				18"		10⅞"		
	30A4	5	12	3'-10"	5	4.00	20			2'-7"	15"				12⅞"		7⅞"		
	30A5	5	12	5'-3"	5	5.48	27		15"	2'-3"	21"				18"		10⅞"		
	30A6	5	T3	11'-11"	3	12.43	37										20"	3'-3½"	
	30A7	5	12	5'-1"	5	5.30	26		15"	2'-7"	15"				12⅝"		7⅞"		
	30A8	4	STR	4'-8"	15	3.12	47												
	TOTAL						292												
24" DIA.	24A1	6	9	3'-5"	6	5.13	31		3'-5"						13"			2'-3½"	14½"
	24A2	6	T3	9'-4"	7	14.02	98										22"	2'-4½"	
	24A3	5	12	3'-6"	10	3.65	37			2'-1"	17"				14½"		8¾"		
	24A4	5	12	4'-9"	10	4.96	50		15"	2'-1"	17"				14½"		8¾"		
	24A5	5	T3	11'-11"	3	12.43	37										20"	3'-3½"	
	24A6	4	STR.	4'-8"	12	3.12	37												
	TOTAL						290												

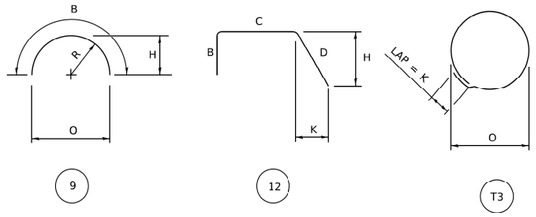

NOTES:
ALL DIMENSIONS ARE OUT TO OUT OF BAR.
BENDING RADII "R" TO OUTSIDE OF BAR.
NUMBERS IN CIRCLES DENOTE BAR TYPE.

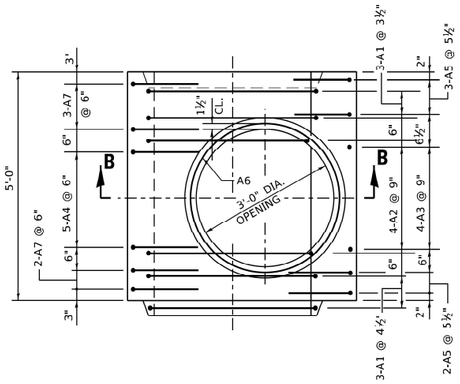

PLAN

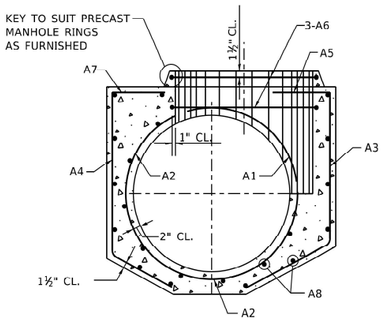

SECTION B–B

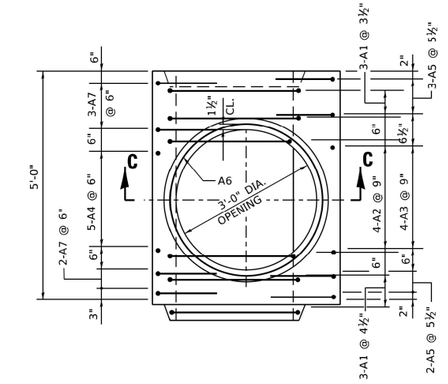

PLAN

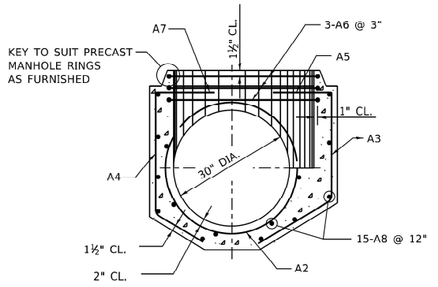

SECTION C–C

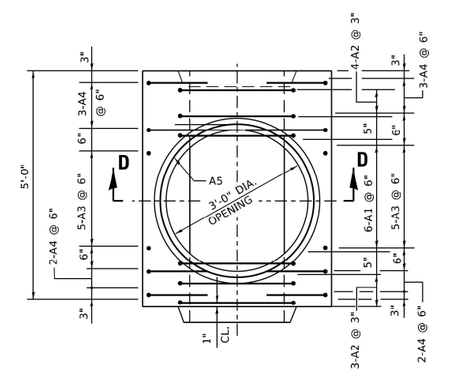

PLAN

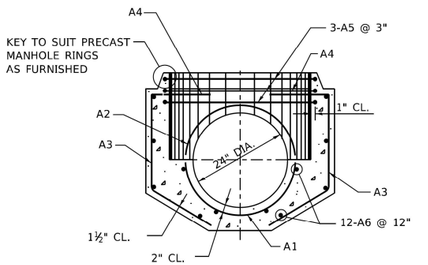

SECTION D–D

PLACING OF CONCRETE- CONCRETE MUST BE PLACED IN ACCORDANCE WITH THE METHOD OUTLINED IN THE CITY OF CHICAGO STANDARD SPECIFICATIONS.
CONSTRUCTION JOINTS - JOINTS NOT INDICATED ON THE DRAWINGS MUST BE SO MADE AND LOCATED AS NOT TO IMPAIR THE STRENGTH OF THE STRUCTURE AND MUST BE APPROVED BY THE COMMISSIONER. JOINTS MUST BE CONSTRUCTED IN ACCORDANCE WITH THE METHOD OUTLINED IN THE SPECIFICATIONS.

CONCRETE PROTECTION FOR REINFORCEMENT- ALL REINFORCING STEEL MUST HAVE CLEAR CONCRETE COVERING AS FOLLOWS (UNLESS OTHERWISE NOTED) :
3" AT EXTERIOR SURFACES WHERE CONCRETE IS DEPOSITED AGAINST THE GROUND;
2.5" AT SURFACES WHERE CONCRETE IS FORMED BUT SUBSEQUENTLY WILL BE IN CONTACT WITH SEWAGE; 2" AT ALL OTHER SURFACES.

REINFORCING STEEL- ALL REINFORCING BARS MUST BE ACCURATELY PLACED AND SECURELY SUPPORTED BY BAR SUPPORTS, SPACERS OR HIGH CHAIRS.
ALL LAPS IN REINFORCING STEEL MUST BE BASED UPON THE 1989, ACI BUILDING CODE.
UNLESS OTHERWISE NOTED. HOOKS AND BENDS ON BARS MUST CONFORM TO RECOMMENDED DETAILS AS GIVEN IN THE "MANUAL OF STANDARD PRACTICE", C.R.S.I. 1990.

THE FOLLOWING ABBREVIATIONS ARE USED TO INDICATE THE LOCATION OF REINFORCING BARS:

T.	DENOTES	TOP	N.F.	DENOTES	NEAR FACE
BOT.	DENOTES	BOTTOM	F.F.	DENOTES	FAR FACE
I.F.	DENOTES	INSIDE FACE	E.F.	DENOTES	EACH FACE
O.F.	DENOTES	OUTSIDE FACE	E.W.	DENOTES	EACH WAY

PLACING BAR SUPPORTS- ALL REINFORCING BARS MUST BE SUPPORTED, ANCHORED AND TIED AND MUST CONFORM TO THE "RECOMMENDED PRACTICE FOR PLACING REINFORCING BARS", 1986, PREPARED BY THE CONCRETE REINFORCING STEEL INSTITUTE.

MANHOLE BASE FOR SEWERS 36" DIA.

MANHOLE BASE FOR 30" DIA. SEWERS

MANHOLE BASE FOR 24" DIA. SEWERS

MODEL: Default
FILE NAME: pw:\\Idot-pw.bentley.com:PWIDOT\Documents\IDOT Offices\District 1\Projects\Dist1Std22x34in\CADData\CADSheets\bd09.dgn

USER NAME = Lawrence.DeManche	DESIGNED -	REVISED - K. SMITH 09-22-90	STATE OF ILLINOIS DEPARTMENT OF TRANSPORTATION	CITY OF CHICAGO DRAINAGE DETAILS	F.A. RTE. 290
	DRAWN -	REVISED - K. SMITH 11-18-22		REINFORCEMENT FOR TYPE "A" PRECAST BASES AND RINGS 24" TO 36"	SECTION 2019-192-B-R
PLOT SCALE = 100.0000 ' / in.	CHECKED -	REVISED -			COUNTY COOK
PLOT DATE = 11/18/2022	DATE - 06-18-82	REVISED -		SCALE: NONE SHEET 1 OF 1 SHEETS STA. TO STA.	TOTAL SHEETS 237
					SHEET NO. 202
					BD600–12 (BD–09)
					CONTRACT NO. 62K65
					ILLINOIS FED. AID PROJECT

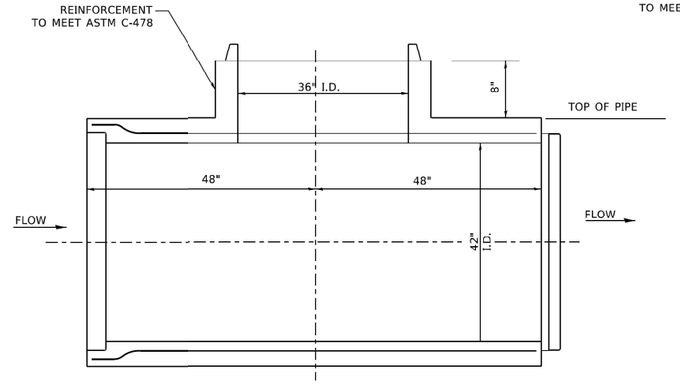

ELEVATION

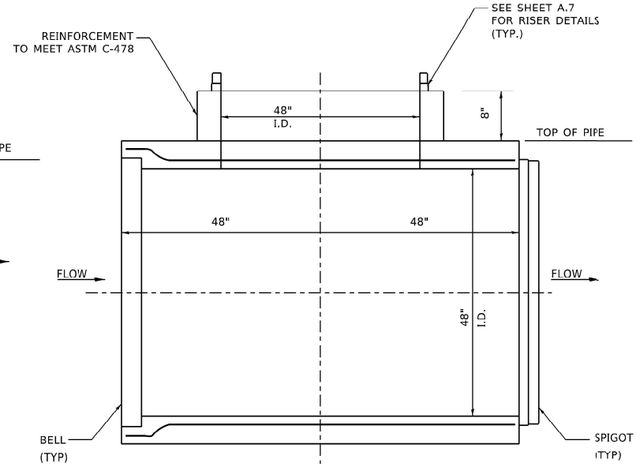

ELEVATION

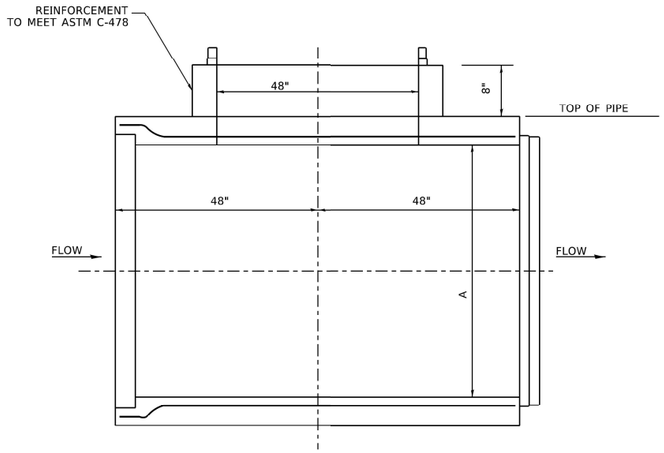

ELEVATION

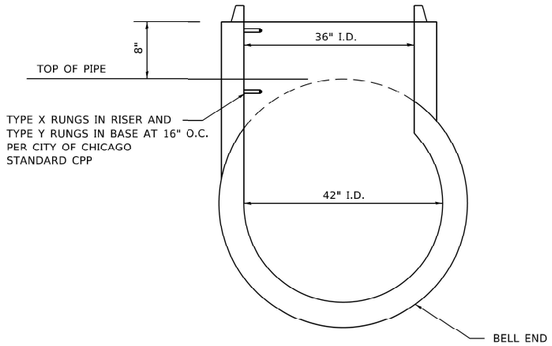

STANDARD (LEFT) RISER

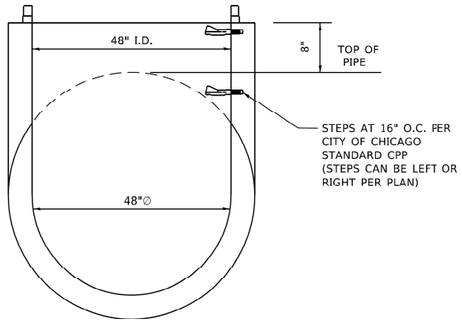

48" x 48" RCP BASE TEE

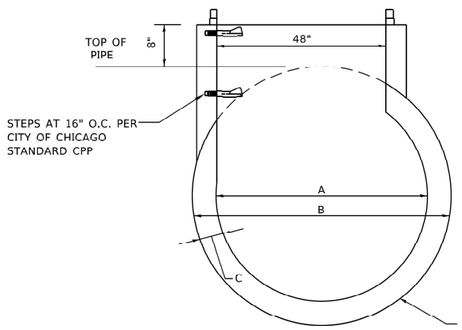

STANDARD (LEFT) RISER

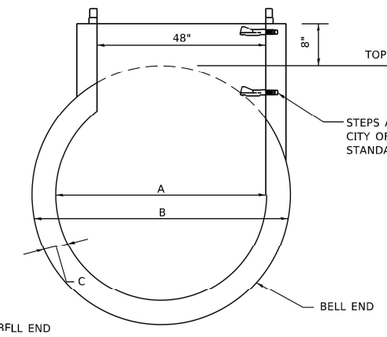

OPTIONAL (RIGHT) RISER

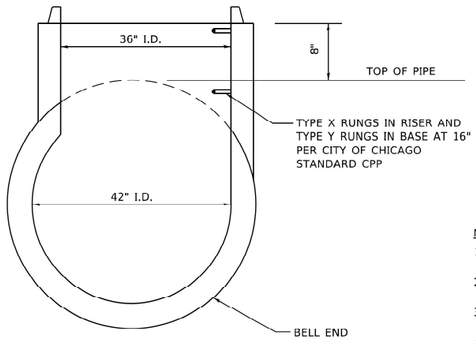

OPTIONAL (RIGHT) RISER

42" x 36" RCP BASE TEE

NOTES:

1. FOR LADDER DETAILS, SEE DETAIL SHEET A.24
2. FOR RISER DETAILS, SEE DETAIL SHEET A.7
3. ALL BASE TEES SHALL BE ASTM C76 CLASS V.
4. THE BASE TEE MUST BE COMPATIBLE WITH THE ADJOINING PIPE, AND GASKET JOINTS COMPLYING WITH ASTM C-76 AND C-443, RESPECTIVELY.
5. ALL PIPE AND FITTINGS 24 INCHES IN DIAMETER AND LARGER MUST BE CLASS III, IV AND V REINFORCED CONCRETE PIPE AS SPECIFIED IN THE SPECIFICATIONS FOR "REINFORCED CONCRETE CULVERT STORM DRAIN, AND SEWER PIPE." A.S.T.M. DESIGNATION C76, TABLE III, IV AND V, WALL B OR WALL C WITH CIRCULAR OR ELLIPTICAL REINFORCEMENT.

DIMENSIONS OF PRECAST MANHOLE BASE			
A	B	C	RUNGS
120"	142"	11"	6
108"	128"	10"	6
96"	114"	9"	5
84"	101¼"	8¾"	4
78"	94½"	8¼"	4
72"	87½"	7¾"	4
66"	80½"	7¼"	3
60"	73½"	6¾"	3
54"	66½"	6¼"	3
48"	59½"	5¾"	3
42"	52½"	5¼"	3

≥ 54" x 48" RCP BASE TEE

MODEL: Default
FILE NAME: pw:\\dot-pw.bentley.com:PWIDOT Documents\IDOT Offices\District 1\Projects\DistStd22x34(CAD)Data\CADsheets\bd09.dgn

USER NAME = Lawrence.DeManche	DESIGNED -	REVISED - K. SMITH 09-22-90	
	DRAWN -	REVISED - K. SMITH 11-18-22	
PLOT SCALE = 100.0000 ' / in.	CHECKED -	REVISED -	
PLOT DATE = 11/18/2022	DATE - 06-18-82	REVISED -	

STATE OF ILLINOIS
DEPARTMENT OF TRANSPORTATION

CITY OF CHICAGO DRAINAGE DETAILS
TYPE "A" BASE TEE MANHOLE BASES 42" AND LARGER

SCALE: NONE | SHEET 1 OF 1 SHEETS | STA. | TO STA.

F.A. RTE.	SECTION	COUNTY	TOTAL SHEETS	SHEET NO.
290	2019-192-B-R	COOK	237	203
	BD600–12 (BD–09)	CONTRACT NO. 62K65		
	ILLINOIS FED. AID PROJECT			

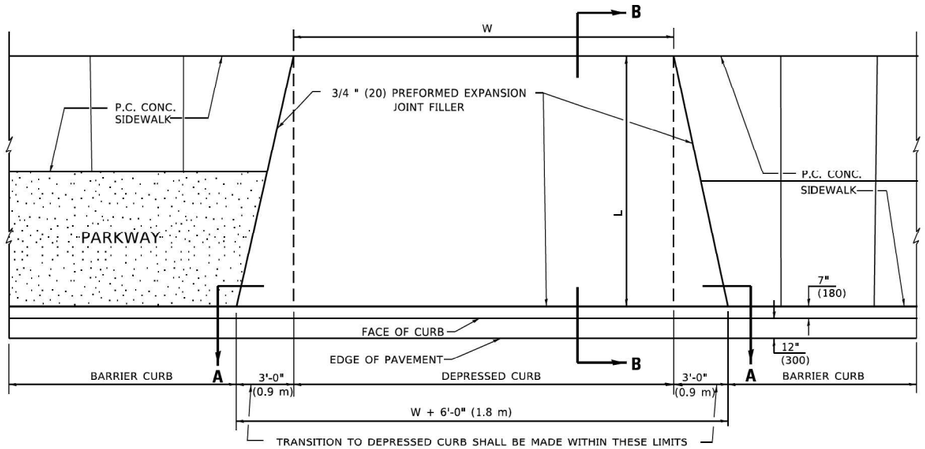

PLAN VIEW

NOTES:

1. EXPANSION JOINTS SHALL BE CONSTRUCTED AS SHOWN ON THE DETAILS FOR P.C.C. SIDEWALK.
2. THE CURB BETWEEN ADJACENT DRIVEWAYS SHALL BE FULL HEIGHT FOR A DISTANCE OF AT LEAST FOUR 4 FEET (1.2 METERS).
3. P.C. CONCRETE DRIVEWAYS SHALL BE CONSTRUCTED AT LOCATIONS SHOWN ON THE PLANS OR AS DIRECTED BY THE ENGINEER.

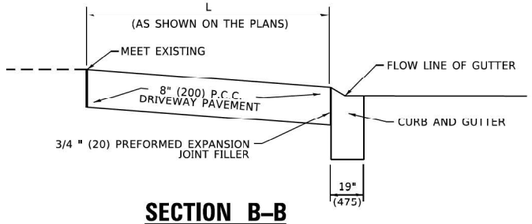

SECTION B–B

BASIS OF PAVEMENT

1. 3/4 " (20) PREFORMED EXPANSION JOINTS WILL NOT BE PAID FOR SEPARATELY BUT SHALL BE INCLUDED IN P.C.C. DRIVEWAY PAVEMENT 8" (200).
2. COMBINATION CONC. CURB AND GUTTER SHALL BE MEASURED STRAIGHT ACROSS THE DRIVEWAY. NO ADDITIONAL COMPENSATION WILL BE ALLOWED FOR THE TRANSITION CURB AND GUTTER.

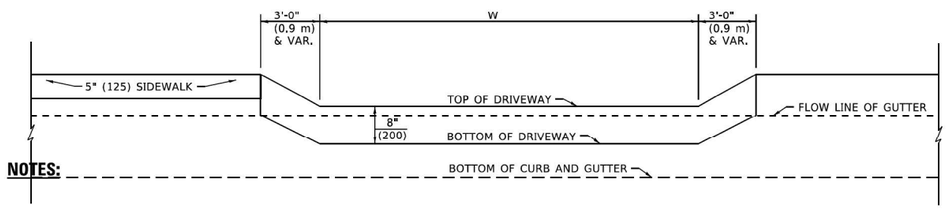

NOTES:

SECTION A–A

P.C.C. DRIVEWAY PAVEMENT DETAIL

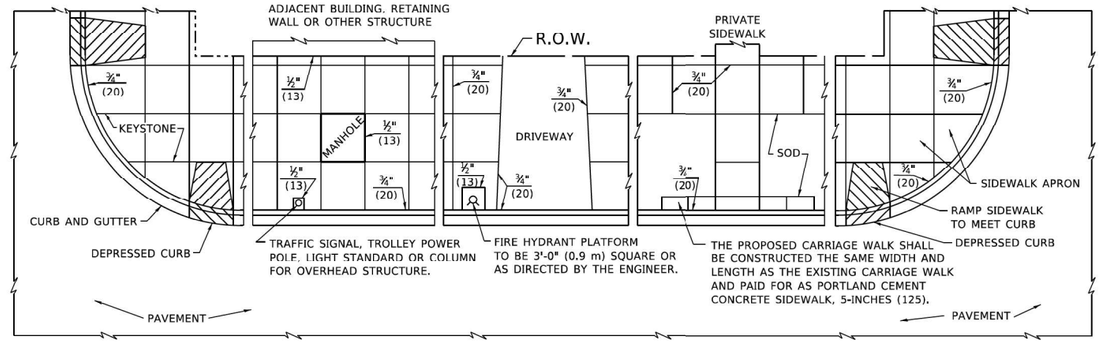

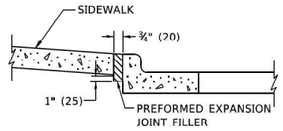

SLOPE FOR SIDEWALK
1" (25) IN 3'-0" (0.9 m) IN CHICAGO

NOTES:

1. ONE-HALF INCH THICK EXPANSION JOINTS SHALL BE PLACED BETWEEN THE SIDEWALK AND ALL STRYCTURES SUCH AS LIGHT STANDARDS, TRAFFIC LIGHT STANDARDS, MANHOLES, WHICH EXTEND THROUGH THE SIDEWALK.
2. 3/4" (20) THICK EXPANSION JOINTS SHALL BE PLACED AT INTERVALS OF NOT MORE THAN 100 FEET (30 METERS) IN THE SIDEWALK. WHERE THE SIDEWALK IS CONSTRUCTED ADJACENT TO PAVEMENT OR CURB HAVING EXPANSION JOINTS, THE EXPANSION JOINTS IN THE SIDEWALK SHALL BE PLACED OPPOSITE THE EXISTING EXPANSION JOINTS AS NEARLY AS PRACTICABLE. EXPANSION JOINTS SHALL ALSO BE PLACED WHERE THE SIDEWALK ABUTS EXISTING SIDEWALKS, BETWEEN DRIVEWAY PAVEMENT AND SIDEWALK, AND BETWEEN SIDEWALK AND CURBS WHERE THE SIDEWALK ABUTS THE CURB.

PORTLAND CEMENT CONCRETE SIDEWALK DETAILS

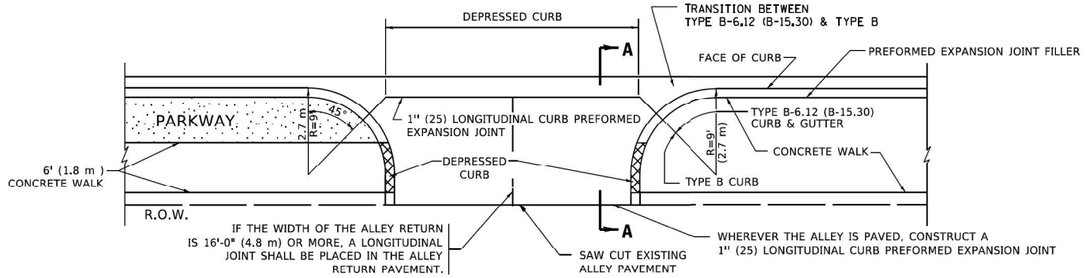

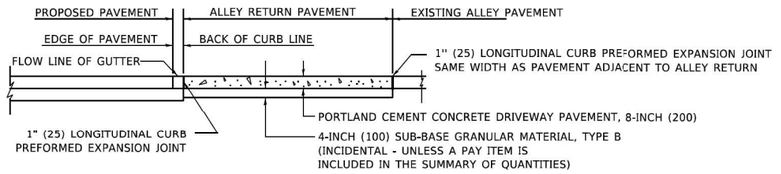

SECTION A–A

BASIS OF PAVEMENT

1. SUB-BASE GRANULAR MATERIAL TYPE B SHALL BE PAID FOR SEPERATELY.
2. NO EXTRA COMPENSATION SHALL BE ALLOWED FOR THE GUTTER FLARE.

ALLEY RETURN DETAIL

ALL DIMENSIONS ARE IN INCHES (MILLIMETERS) UNLESS OTHERWISE SHOWN

MODEL: Default
FILE NAME: pw:\\dot-pw.bentley.com:PWDOT\Documents\IDOT Offices\District 1\Projects\Dist Std 22-24\CADData\CADsheetstbd17.dgn

USER NAME = Lawrence.DeManche	DESIGNED - M. DE YONG	REVISED - K. SMITH 11-18-22	
	DRAWN -	REVISED -	
PLOT SCALE = 100.0000 ' / in.	CHECKED -	REVISED -	
PLOT DATE = 11/18/2022	DATE - 06-13-90	REVISED -	

STATE OF ILLINOIS
DEPARTMENT OF TRANSPORTATION

CITY OF CHICAGO
DETAILS FOR P.C. CONCRETE DRIVEWAY, ALLEY RETURN AND SIDEWALK

SCALE: NONE | SHEET 1 OF 1 SHEETS | STA. | TO STA.

F.A.I RTE.	SECTION	COUNTY	TOTAL SHEETS	SHEET NO.
290	2019-192-B-R	COOK	237	204
	BD400–03 (BD–17)	CONTRACT NO. 62K65		
	ILLINOIS FED. AID PROJECT			

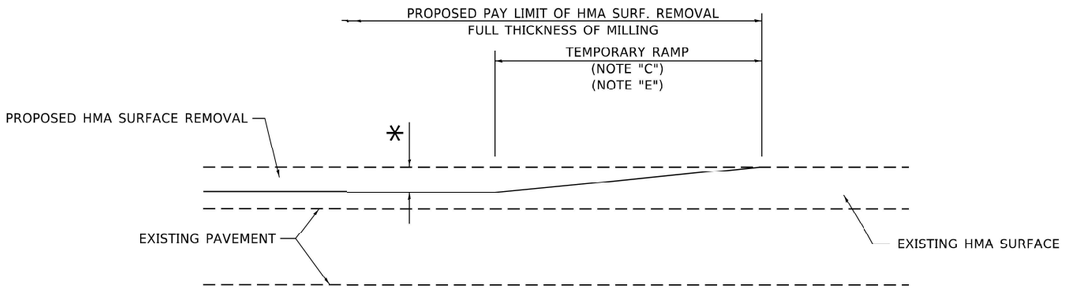

MILLED TEMPORARY RAMP

(FOR BUTT JOINT AND HMA TAPER SEE DETAIL BELOW)

OPTION 1

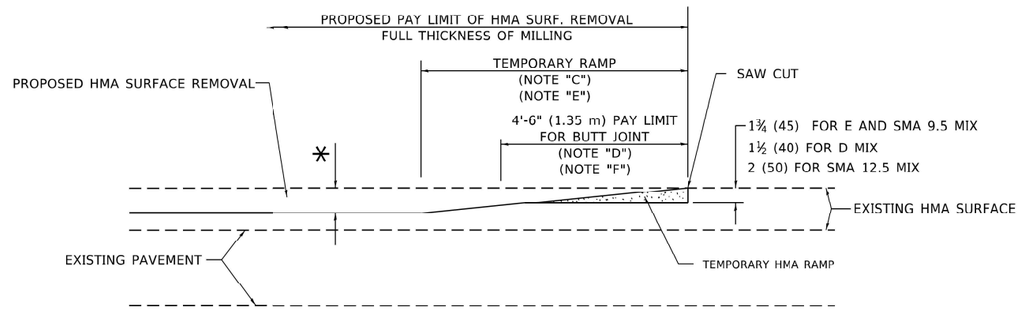

HMA CONSTRUCTED TEMPORARY RAMP

(FOR BUTT JOINT AND HMA TAPER SEE DETAIL BELOW)

OPTION 2

TYPICAL TEMPORARY RAMP

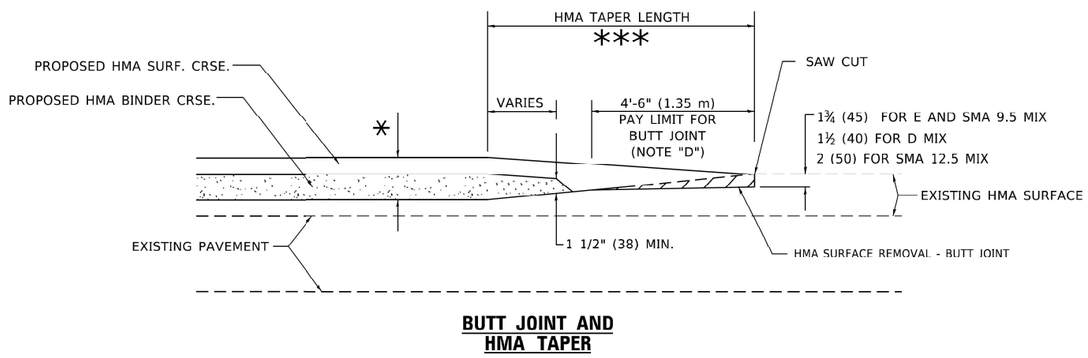

BUTT JOINT AND HMA TAPER

TYPICAL BUTT JOINT AND HMA TAPER FOR MILLING AND RESURFACING

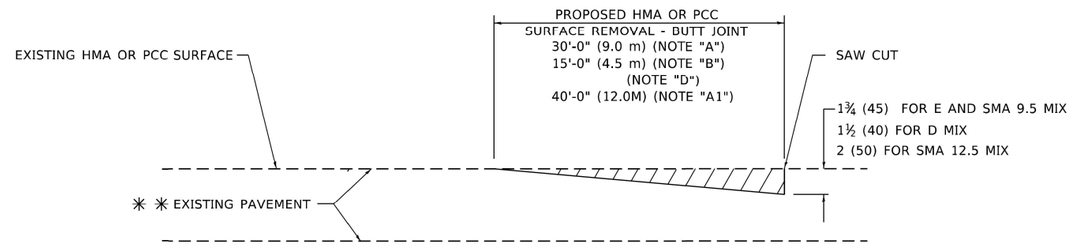

BUTT JOINT DETAIL

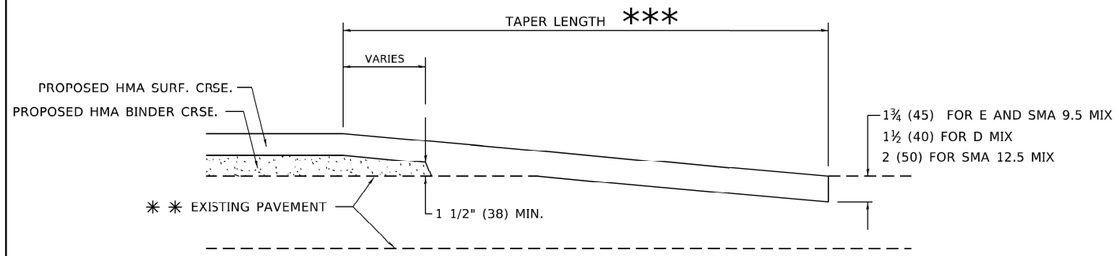

HMA TAPER DETAIL

TYPICAL BUTT JOINT AND HMA TAPER FOR RESURFACING ONLY

** PC CONCRETE, HMA OR HMA RESURFACED PAVEMENT.

GENERAL NOTES

A. MAINLINE ARTERIAL ROADWAYS AND MAJOR SIDE ROADS.

A1. INTERSTATES

B. MINOR SIDE ROADS.

C. THE TEMP. RAMP SHALL BE CONSTRUCTED IMMEDIATELY UPON REMOVAL OF THE EXISTING HMA SURFACE.

D. THE BUTT JOINT SHALL BE CONSTRUCTED IMMEDIATELY PRIOR TO PLACING THE PROPOSED HMA COURSES.

E. TAPER THE TEMP. RAMP AT A RATE OF 3' - 4" (1.02m) PER 1 INCH (25 mm) OF MILLING THICKNESS.
* SEE TYPICAL SECTIONS FOR MILLING THICKNESS.

F. SEE ARTICLE 406.08 AND 406.14 OF THE STANDARD SPECIFICATIONS FOR "HMA AND/OR PCC SURFACE REMOVAL, BUTT JOINT".
*** 20'-0" (6.: m) PER 1 (25) RESURFACING (NOTE "A")
10'-0" (3.0 m) PER 1 (25) RESURFACING (NOTE "B")

BASIS OF PAYMENT

1. THE BUTT JOINT WILL BE PAID FOR AT THE CONTRACT UNIT PRICE PER SQUARE YARD (SQUARE METER) FOR "HOT-MIX ASPHALT SURFACE REMOVAL - BUTT JOINT" OR FOR "PORTLAND CEMENT CONCRETE SURFACE REMOVAL- BUTT JOINT".

2. THE TEMPORARY RAMP AND SAW CUT SHALL BE INCLUDED IN THE UNIT COST FOR HMA OR PCC SURFACE REMOVAL-BUTT JOINT.

ALL DIMENSIONS ARE IN INCHES (MILLIMETERS) UNLESS OTHERWISE SHOWN.

MODEL: Default
FILE NAME: pw:\\dot-pw.bentley.com:PWIDOT\Documents\IDOT Offices\District 1\Projects\Dist5\d22x34\CADData\CADsheets\sd32.dgn

USER NAME = Lawrence.DeManche	DESIGNED - M. DE YONG	REVISED - A. ABBAS 03-21-97	
	DRAWN -	REVISED - M. GOMEZ 04-06-01	
PLOT SCALE = 100.0000 ' / in.	CHECKED -	REVISED - R. BORO 01-01-07	
PLOT DATE = 11/18/2022	DATE - 06-13-90	REVISED - K. SMITH 11-18-22	

STATE OF ILLINOIS
DEPARTMENT OF TRANSPORTATION

BUTT JOINT AND HMA TAPER DETAILS

SCALE: NONE | SHEET 1 OF 1 SHEETS | STA. | TO STA.

F.A. RTE.	SECTION	COUNTY	TOTAL SHEETS	SHEET NO.
290	2019-192-B-R	COOK	237	205
	BD400–05 BD–32	CONTRACT NO. 62K65		
	ILLINOIS FED. AID PROJECT			

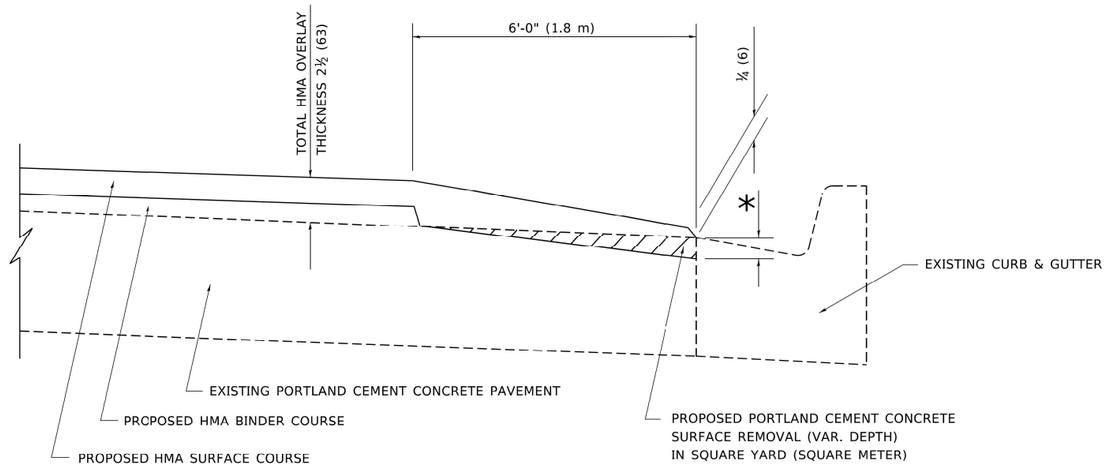

HMA TAPER AT
EDGE OF PCC PAVEMENT

HMA SURFACE COURSE		HMA BINDER COURSE	
MIX	THICKNESS	THICKNESS	* MILLING AT GUTTER FLAG
D	1½ (38)	1 (25)	1¼ (33)
E OR SMA 9.5	1¾ (44)	¾ (19)	1½ (38)

ALL DIMENSIONS ARE IN INCHES (MILLIMETERS) UNLESS OTHERWISE SHOWN.

MODEL: Default
FILE NAME: pw:\\dot-pw.bentley.com:PWIDOT\Documents\IDOT Offices\District 1\Projects\DistStd22x34(CAD)data\CADsheets\bd33.dgn

USER NAME = Shawn.Ley	DESIGNED - R. SHAH	REVISED - E. GOMEZ 12-21-00	
	DRAWN - JIS	REVISED - R. BORO 01-01-07	
PLOT SCALE = 50.0000 ' / in.	CHECKED - A. ABBAS	REVISED - JP CHANG 07-08-16	
PLOT DATE = 1/23/2023	DATE - 09-10-94	REVISED - K. SMITH 11-18-22	

STATE OF ILLINOIS
DEPARTMENT OF TRANSPORTATION

HMA TAPER AT
EDGE OF P.C.C. PAVEMENT

SCALE: NONE | SHEET 1 OF 1 SHEETS | STA. | TO STA.

F.A. RTE.	SECTION	COUNTY	TOTAL SHEETS	SHEET NO.
290	2019-192-B-R	COOK	237	206
	BD400–06 BD–33	CONTRACT NO. 62K65		
	ILLINOIS | FED. AID PROJECT			

bd33.dgn 1/23/2023 6:38:32 AM User=Shawn.Ley

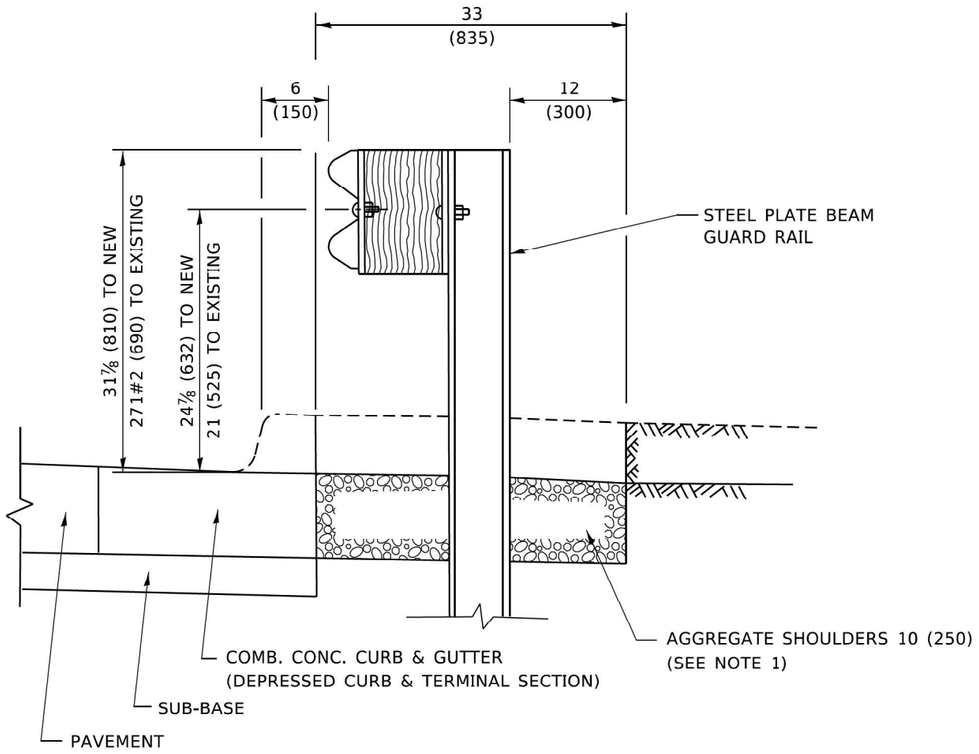

SECTION A–A

NOTES:

1. THE AGGREGATE SHOULDER, 10 (250) OR HMA SHOULDER, 6 (150) (IF REQUIRED) SHALL EXTEND UNDER THE TRAFFIC BARRIER TERMINAL.
2. "EXISTING" GUARDRAIL REFERS TO CONNECTING TERMINAL SECTION TO GUARD RAILING PRIOR TO THE MIDWEST GUARDRAIL SYSTEM.
3. THE CONTRACTOR SHALL VERIFY THE TYPE/HEIGHT OF GUARDRAIL IN-PLACE BEFORE ORDERING THE NEW TERMINAL SECTION. COST INCLUDED WITH THE COST OF THE TERMINAL. THE EXISTING GUARDRAIL HEIGHT SHALL TRANSISTION TO MATCH THE NEW TERMINAL END SECTION AND SHALL BE PAID FOR AS VERTICAL ADJUSTMENT OF EXISTING GUADRAIL.

DETAILS FOR STEEL PLATE BEAM GUARD RAIL ADJACENT TO CURB AND GUTTER [FOR ROADWAY SPEED 35 MPH (60 kmh) TO 45 MPH (70 kmh)]

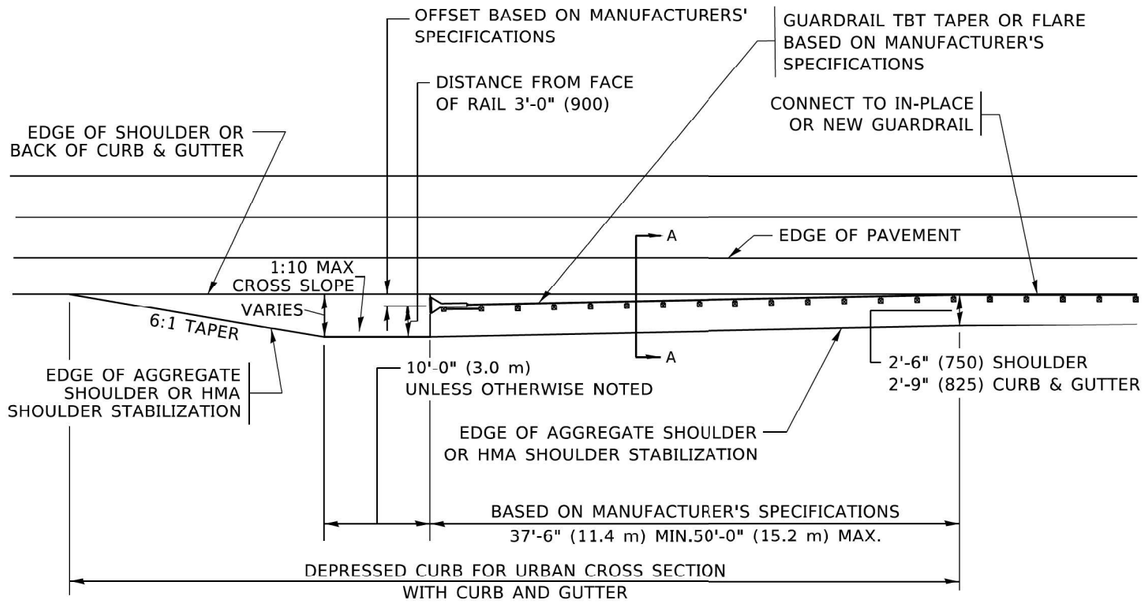

DEPRESSED CURB AND GUTTER AND SHOULDER TREATMENT AT TBT TY. 1 SPL.

AGGREGATE SHOULDER, 10 (250) WILL BE PAID ACCORDING TO SECTION 481.

HMA SHOULDERS 6 (150) (IF REQUIRED) WILL BE PAID ACCORDING TO SECTION 482.

COMB. CONC. C&G, STEEL PLATE BEAM GUARD RAIL AND TRAFFIC BARRIER TERMINAL, OF THE TYPE SPECIFIED WILL BE PAID FOR SEPARATELY.

TBT = TRAFFIC BARRIER TERMINAL

ALL DIMENSIONS ARE IN INCHES (MILLIMETERS) UNLESS OTHERWISE SHOWN.

MODEL: Default
FILE NAME: pw:\\dot-pw.bentley.com:PWIDOT\Documents\IDOT Offices\District 1\Projects\DistStd22x34\CADData\C4Dsheetstod34.dgn

USER NAME = Lawrence.DeManche	DESIGNED - M. DE YONG	REVISED - R. BORO 09-14-2009	STATE OF ILLINOIS DEPARTMENT OF TRANSPORTATION	DETAILS FOR DEPRESSED CURB & GUTTER AND SHOULDER TREATMENT AT TBT TY. 1 SPL.	
	DRAWN -	REVISED - R. BORO 08-06-2012			
PLOT SCALE = 100.0000 ' / in.	CHECKED -	REVISED - R. BORO 05-08-2015			
PLOT DATE = 11/18/2022	DATE - 09-22-90	REVISED - K. SMITH 11-18-22		SCALE: NONE SHEET 1 OF 1 SHEETS STA. TO STA.	

F.A.I RTE.	SECTION	COUNTY	TOTAL SHEETS	SHEET NO.
290	2019-192-B-R	COOK	237	207
BD600–10 (BD–34)		CONTRACT NO. 62K65		
ILLINOIS	FED. AID PROJECT			

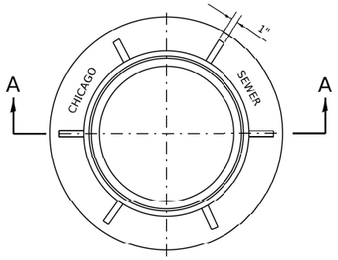

PLAN

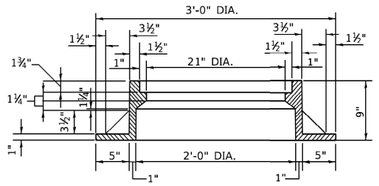

SECTION A–A

NOTE: METAL PLATES MUST BE FURNISHED FOR PERFORATED LIDS ON MANHOLES.

HEAVYWEIGHT MANHOLE FRAME

MATERIAL: CAST IRON

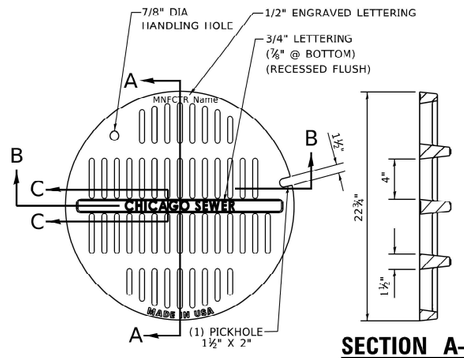

SECTION A–A

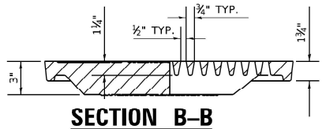

SECTION B–B

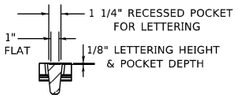

SECTION C–C

MATERIALS
GRATE-GRAY IRON
ASTM A48 CL35B

DESIGN LOAD
HEAVY DUTY

COATING
UNDIPPED

OPEN AREA
85.6 SQ. IN.

STANDARD CB / MH LID

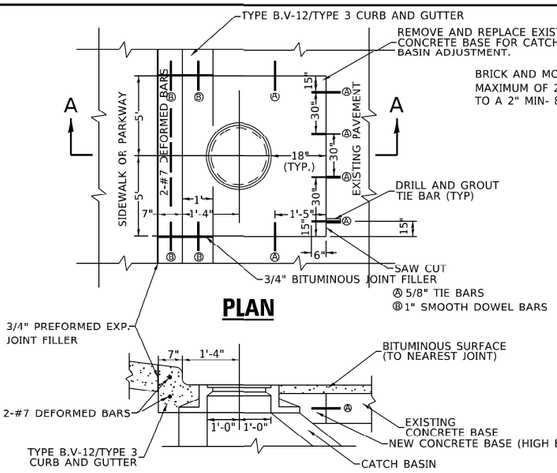

PLAN

SECTION A–A

NOTES:

IF THE ADJUSTMENT EXCEEDS AN 8" HEIGHT, THE CONE MUST BE REMOVED AND THE BARREL SECTION MUST BE ADJUSTED.

THE CONTRACTOR IS REQUIRED TO REPLACE ANY BROKEN FRAMES AND LIDS OF SEWER STRUCTURES WITH STANDARD FRAMES AND LIDS OF THE DWM. IN ADJUSTMENT OR RECONSTRUCTION OF SEWER STRUCTURES, ANY NON-STANDARD FRAMES AND LIDS MUST BE REPLACED WITH STANDARD FRAMES AND LIDS. IN ADJUSTMENT OR RECONSTRUCTION OF INLETS, ANY NON-STANDARD INLETS (GUTTER BOXES) MUST BE REPLACED WITH DWM STANDARD INLETS.

THE FRAMES AND LIDS OF SEWER STRUCTURES TO BE ABANDONED, REMOVED, OR FILLED MUST BE SALVAGED AND THE DWM NOTIFIED FOR PICK UP.

MANHOLES, CATCH BASINS AND INLETS MUST BE PROTECTED FROM THE ENTRY OF ASPHALT/DEBRIS INTO THE SEWER SYSTEM DURING CONSTRUCTION. THE CONTRACTOR MUST MARK LOCATIONS OF ALL SEWER STRUCTURES ON THE SIDEWALK BEFORE STARTING PAVEMENT REMOVAL/REPLACEMENT. ADJUSTMENT OF FRAMES AND LIDS OF SEWER STRUCTURES MUST BE COMPLETED PRIOR TO STREET RESURFACING.

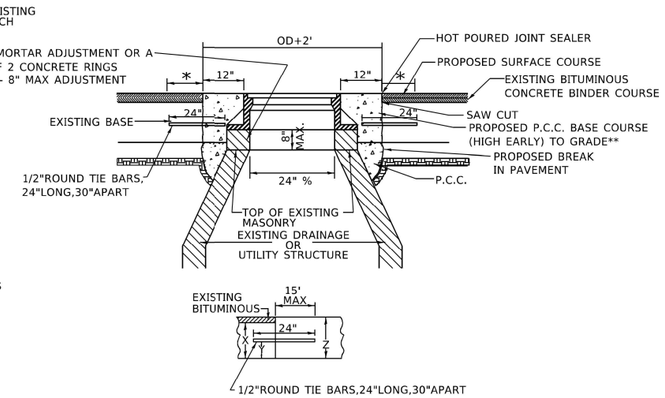

SEE CONSTRUCTION DETAILS (FOR MISCELLANEOUS STRUCTURES)
X = THICKNESS OF PAVEMENT
Y = ONE HALF THE THICKNESS OF CONCRETE PAVEMENT OR CONCRETE BASE.
Z = 10" OR THICKNESS OF PROPOSED PAVEMENT - WHICHEVER IS GREATER

∗ REFER TO CDOT FOR ASPHAULT RESTORATION EWQUIRE MENRS & CRACK SEAL.

∗∗ON NON-MORATORIUM STREETS, FULL DEPTH, PCC BASE COURSE MAY BE UTILIZED. ON MORATORIUM STREETS, PAVEMENT RESTORATION SHALL ADORE TO CDOT REQUIREDMWNTS.

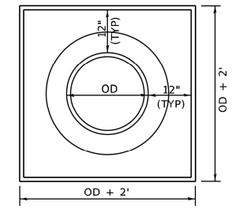

PLAN VIEW
(BASE TO GRADE)

DETAIL OF FRAME ADJUSTMENT

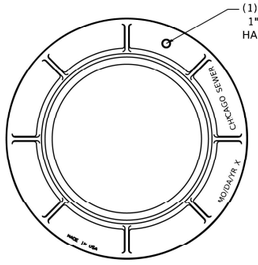

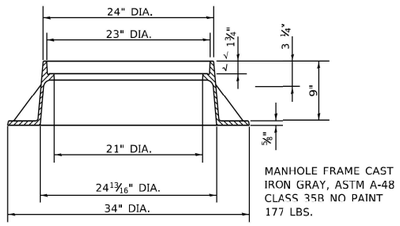

LIGHTWEIGHT MANHOLE FRAME

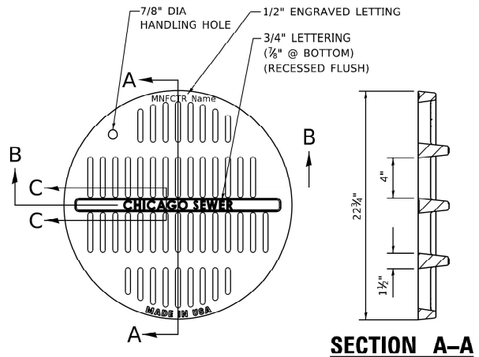

SECTION A–A

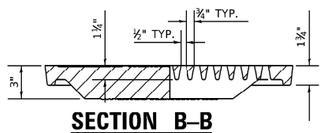

SECTION B–B

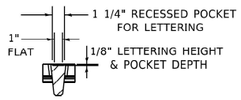

SECTION C–C

MATERIALS
GRATE-GRAY IRON
ASTM A48 CL35B

DESIGN LOAD
HEAVY DUTY

COATING
UNDIPPED

OPEN AREA
85.6 SQ. IN.

ADA COMPLIANT CATCH BASIN / MANHOLE LID

NOTE:
NOT TO BE USED WITHOUT
PRIOR APPROVAL OF CDWM

SOLID LID FOR MANHOLES

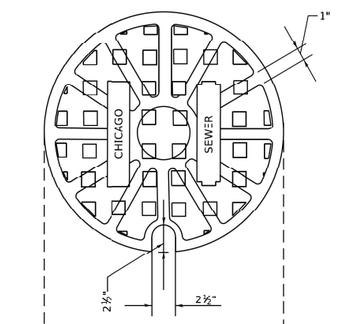

PLAN

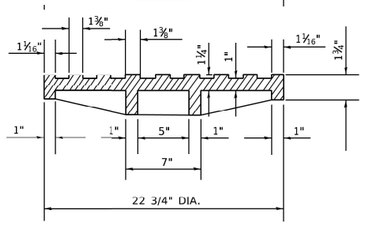

SECTION

USER NAME = Lawrence.DeManche	DESIGNED - M. GOMEZ	REVISED - K. SMITH 11-18-22	
	DRAWN -	REVISED -	
PLOT SCALE = 100.0000 ' / in.	CHECKED -	REVISED -	
PLOT DATE = 11/18/2022	DATE - 01-25-01	REVISED -	

STATE OF ILLINOIS
DEPARTMENT OF TRANSPORTATION

CITY OF CHICAGO
MANHOLE LIDS AND FRAMES

SCALE: NONE | SHEET 1 OF 1 SHEETS | STA. | TO STA.

F.A. RTE.	SECTION	COUNTY	TOTAL SHEETS	SHEET NO.
290	2019-192-B-R	COOK	237	208
	BD600–13 (BD–47)	CONTRACT NO. 62K65		
	ILLINOIS	FED. AID PROJECT		

MODEL: Default
FILE NAME: pw:\\fdot-pw.bentley.com:PWIDOT Documents\IDOT Offices\District 1\Projects\Districts\Std22x34in\D1Data\CADsheets\bd447.dgn

STANDARD DRAINAGE STRUCTURES FOR PUBLIC STREETS

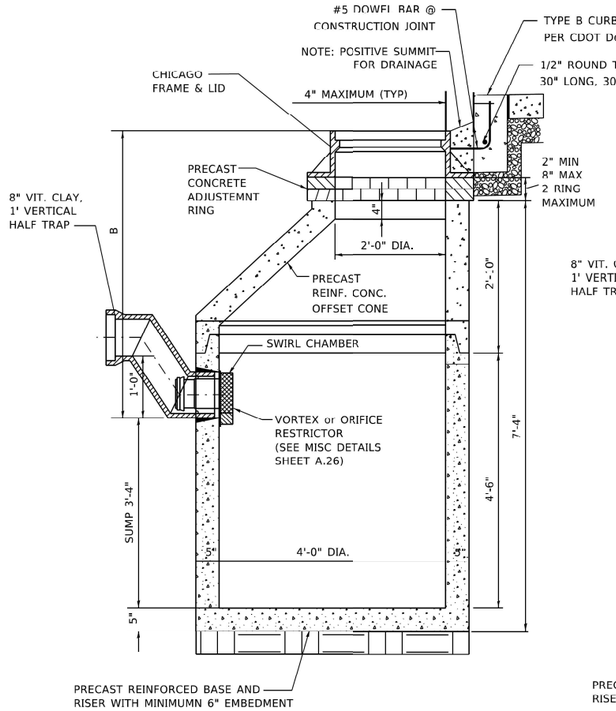

STANDARD CATCH BASIN–4' DIA.

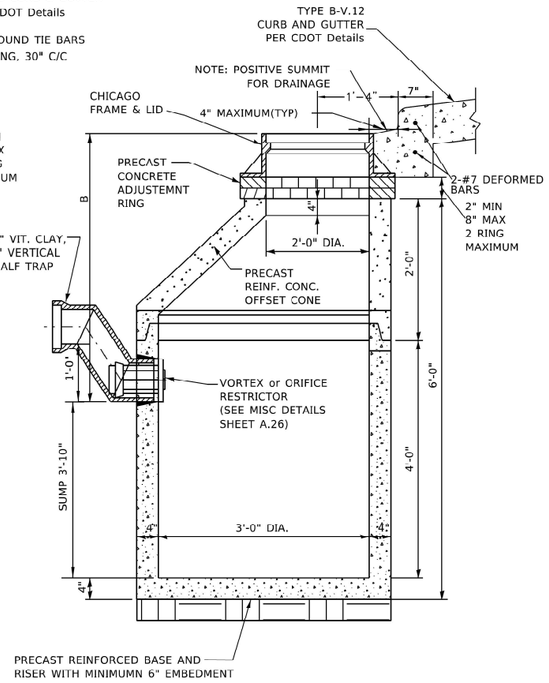

STANDARD CATCH BASIN–3' DIA.

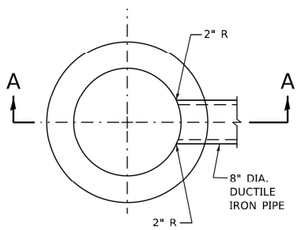

PLAN

(FRAME & LID NOT SHOWN)

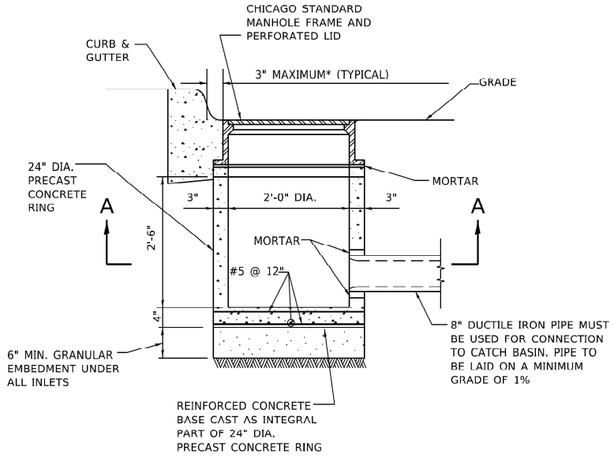

STANDARD INLET–2' DIA.

STANDARD DRAINAGE STRUCTURES FOR PUBLIC ALLEYS

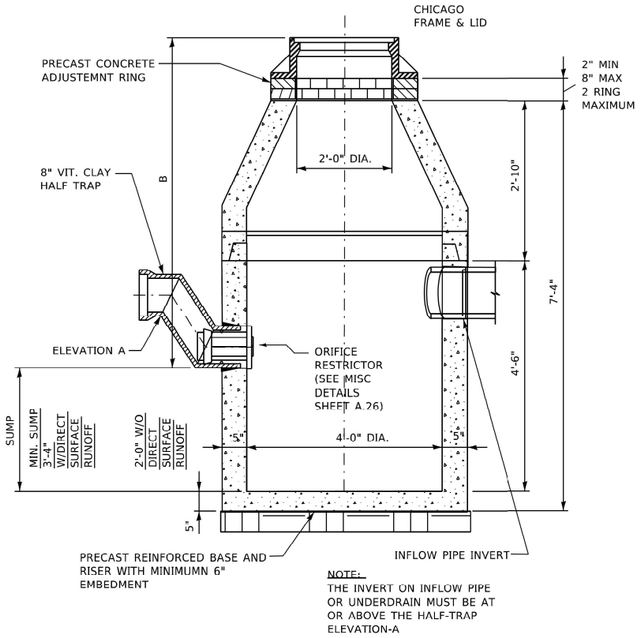

CATCH BASIN–ORIFICE RESTRICTOR

N.T.S.

GENERAL NOTES:

1. CATCH BASIN TO CATCH BASIN CONNECTIONS ARE ALLOWED IN PRIVATE SITES & ALLEYS. ONLY THE DOWNSTREAM CATCH BASIN IS REQUIRED TO HAVE A HALF-TRAP.

2. IF B < 4 FEET, THEN USE A FLAT TOP SLAB CATCH BASIN AS NECESSARY.

3. FOR TRENCH BACKFILL, REFER TO IDOT SSRBC, ARTICLE 1003.04.

4. FOR GRANULAR EMBEDMENT, USE CA-11, CRUSHED GRAVEL, CRUSHED STONE, OR CRUSHED CONCRETE.

5. FOR STABILIZATION STONE, 12" OF CA-1 STONE IS ONLY REQUIRED WHEN UNSTABLE MATERIAL IS ENCOUNTERED AT TRENCH BOTTOM.

6. INLETS AND 3' DIAMETER CATCH BASINS ARE TO BE USED ONLY WITH PRIOR APPROVAL OF THE DEPT OF WATER MANAGEMENT- ENGINEERING SERVICES, SEWER SECTION, AND THE DEPT. OF BUILDINGS STORMWATER REVIEWER.

7. IF COVER OVER VCP IS LESS THAN 3', USE 45 DEGREE DIP BENDS WITH 1 FOOT DROP AS HALF TRAPS AS NEEDED FOR IEPA CLEARANCE REQUIREMENTS

MODEL: Default
FILE NAME: pw:\\Illdot-pw.bentley.com:PWIDOT\Documents\IDOT Offices\District 1\Project\1Dist\Std22x34\CADD\za\CADsheets\std47.dgn

USER NAME = Lawrence.DeManche	DESIGNED - M. GOMEZ	REVISED - K. SMITH 11-18-22	**STATE OF ILLINOIS DEPARTMENT OF TRANSPORTATION**	**CITY OF CHICAGO DRAINAGE STRUCTURE DETAILS**	
	DRAWN -	REVISED -			
PLOT SCALE = 100.0000 ' / in.	CHECKED -	REVISED -		SCALE: NONE	SHEET 1 OF 1 SHEETS STA. TO STA.
PLOT DATE = 11/18/2022	DATE - 01-25-01	REVISED -			

F.A. RTE.	SECTION	COUNTY	TOTAL SHEETS	SHEET NO.
290	2019-192-B-R	COOK	237	209
	BD600–13 (BD–47)	CONTRACT NO. 62K65		
	ILLINOIS	FED. AID PROJECT		

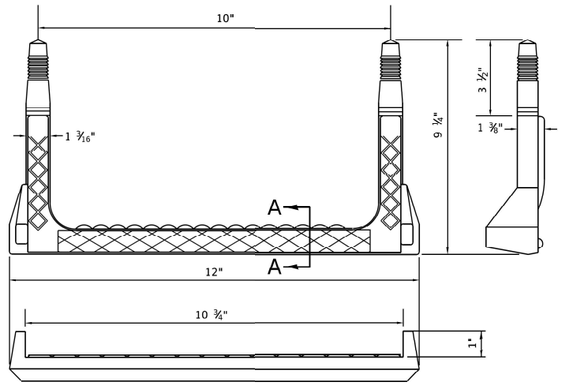

COPOLYMER POLYPROPYLENE PLASTIC

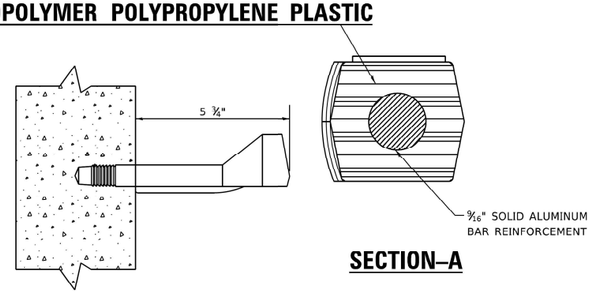

SECTION–A

RECTANGULAR STEP LADDER RUNG

FOR USE ONLY IN 48" DIAMETER
AND LARGER MANHOLES.

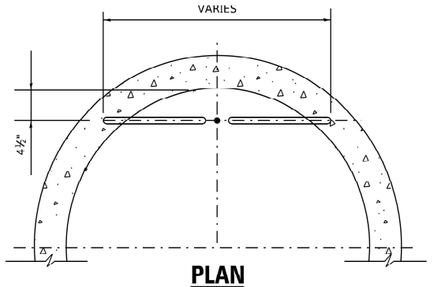

PLAN

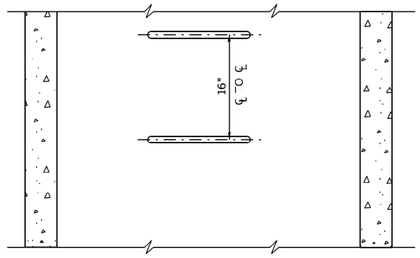

ELEVATION TYPE X RISER

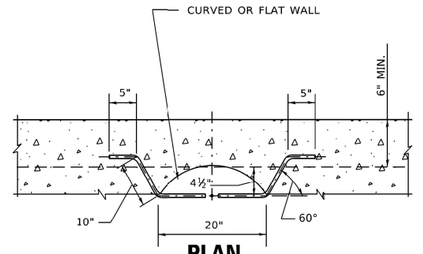

PLAN

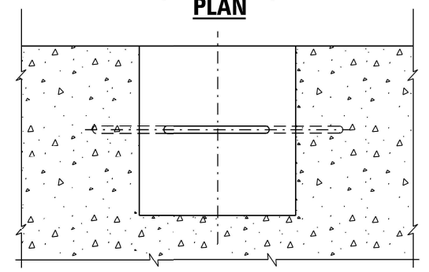

ELEVATION TYPE Y BASE

NOTES:

1. VERTICAL SPACING = 16" O.C., ON VERTICAL WALL ONLY.
2. STEPS SHALL MEET THE REQUIREMENTS OF ASTM C478 IN ADDITION TO A HORIZONTAL PULL-OUT LOAD OF 1000 LBS. WHEN INSTALLED.
3. ALL STEPS SHALL BE VERTICALLY ALIGNED IN A STRAIGHT LINE.
4. MINIMUM CONCRETE STRENGTH MUST BE 3000 PSI
5. HOLES- PREFORMED/DRILLED
   A. HOLES MUST BE PARALLEL
   B. HOLES MUST BE 10" CENTERED, 1" DIAMETER
   C. MINIMUM DEPTH- 3 1/2" TO 3 3/4"

MODEL: Default
FILE NAME: pw:\\dot-pw.bentley.com:PWIDOT\Documents\IDOT Offices\District 1\Projects\Dist\Std22x34\CADData\CADSheets\std47.dgn

USER NAME = Lawrence.DeManche	DESIGNED - M. GOMEZ	REVISED - K. SMITH 11-18-22	
	DRAWN -	REVISED -	
PLOT SCALE = 100.0000 ' / in.	CHECKED -	REVISED -	
PLOT DATE = 11/18/2022	DATE - 01-25-01	REVISED -	

STATE OF ILLINOIS
DEPARTMENT OF TRANSPORTATION

CITY OF CHICAGO
LADDER RUNGS

SCALE: NONE | SHEET 1 OF 1 SHEETS | STA. | TO STA.

F.A. RTE.	SECTION	COUNTY	TOTAL SHEETS	SHEET NO.
290	2019-192-B-R	COOK	237	210
	BD600–13 (BD–47)	CONTRACT NO. 62K65		
	ILLINOIS	FED. AID PROJECT		

DRAINAGE STRUCTURES
RESTRICTORS

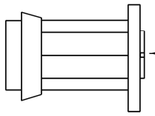

INSERT THE RESTRICTOR INTO THE HALF-TRAP. UPON TIGHTENING OF THE CENTER NUT ON THE FACE OF THE RESTRICTOR, THE RUBBER O-RINGS WILL EXPAND INSIDE THE HALF TRAP, PROVIDING A WATER- TIGHT SEAL.
PULL ON RESTRICTOR TO VERIFY THAT A TIGHT FIT IS MADE.

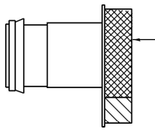

PULL ON RESTRICTOR TO VERIFY THAT A TIGHT FIT IS MADE.

INSERT THE RESTRICTOR WITH THE OPENING DOWN. UPON TIGHTENING OF THE 2 BOLTS ON THE FACE OF THE RESTRICTOR, THE RUBBER O-RINGS WILL PROVIDE A WATER-TIGHT SEAL.

GENERAL NOTES:

1. CATCH BASIN TO CATCH BASIN CONNECTIONS ARE ALLOWED IN PRIVATE SITES & ALLEYS. ONLY THE DOWNSTREAM CATCH BASIN IS REQUIRED TO HAVE A HALF-TRAP.

2. IF B < 4 FEET, THEN USE A DUCTILE IRON PIPE HALF TRAP AND FLAT TOP SLAB CATCH BASIN AS NECESSARY.

3. INLETS AND 3' DIAMETER CATCH BASINS ARE TO BE USED ONLY WITH PRIOR APPROVAL OF DWM FIELD INSPECTOR.

RESTRICTOR NOTES:

THE DWM'S RAIN BLOCKER RESTRICTOR PROGRAM MUST BE MAINTAINED WITH ANY ROADWAY IMPROVEMENT.

THE DESIGN OF ANY ROADWAY IMPROVEMENT MUST CONSIDER LIMITING THE NUMBER OF CATCH BASINS TO THE EXTENT PRACTICAL. THE NUMBER OF EXISTING STRUCTURES SHOULD NOT BE INCREASED.

THE RESTRICTORS CAN BE OBTAINED FROM DWM CENTRAL DISTRICT AT 3901 S. ASHLAND AVE. THE CONTRACTOR SHOULD ARRANGE FOR PICK UP BY CONTACTING 312-747-8736 (7AM TO 3PM, M-F). CONTRACTOR MUST CALL 48 HOURS IN ADVANCE OF PICK UP DATE AND TIME.

FLOW RESTRICTORS MUST BE INSTALLED IN ALL CATCH BASINS OUTSIDE OF THE CENTRAL BUSINESS DISTRICT(LIMITS: NORTH AVE, CERMAK AVE, HALSTED AVE, LAKE MICHIGAN). RESTRICTORS MUST NOT BE INSTALLED IN CATCH BASINS IN CLOSE PROXIMITY TO VIADUCT AREAS, BUS STOPS, OR EMERGENCY ENTRANCES. THE DWM MUST APPROVE THE NON-INSTALLATION OR REMOVAL OF ANY RESTRICTOR. REQUIREMENTS FOR RESTRICTOR INSTALLATION ARE AS FOLLOWS:

*ARTERIAL STREETS: 3-INCH ORIFICE RESTRICTOR
*BUS ROUTES: 3-INCH ORIFICE RESTRICTOR
*RESIDENTIAL STREETS: 3-INCH VORTEX RESTRICTOR
*ALLEYS: 3-INCH ORIFICE RESTRICTOR IN THE LAST CB.
*CLOSED LIDS ARE REQUIRED ON ALL MANHOLES EXCEPT AT INTERSECTIONS WHERE A PERFORATED LID SHALL BE USED.

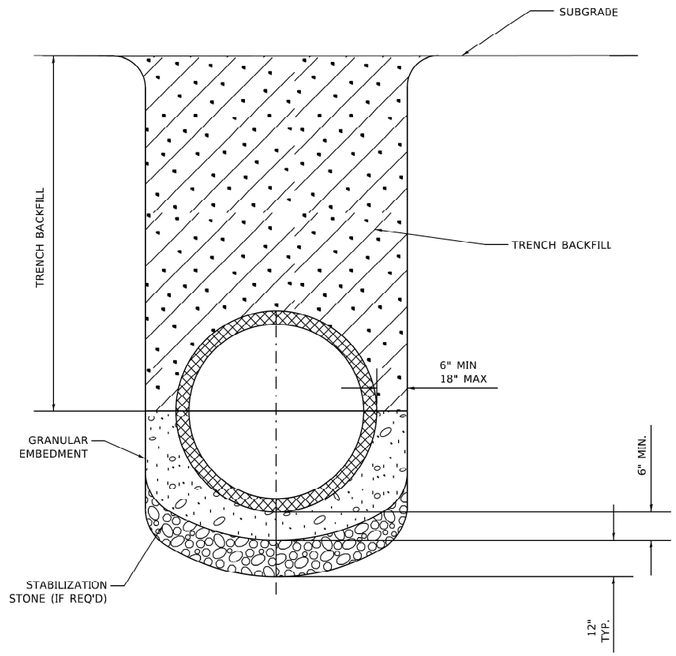

NOTE:
1. FOR TRENCH BACKFILL, REFER TO IDOT SSRBC, ARTICLE 1003.04.

2. FOR GRANULAR EMBEDMENT, USE CA-11, CRUSHED GRAVEL, CRUSHED STONE, OR CRUSHED CONCRETE.

3. FOR STABILIZATION STONE, 12" OF CA-1 STONE IS ONLY REQUIRED WHEN UNSTABLE MATERIAL IS ENCOUNTERED AT TRENCH BOTTOM.

4. AGGREGATE PLACED FOR TEMPORARY SURFACE RESTORATION WILL NOT BE PAID SEPARATELY AND SHALL BE INCIDENTAL TO THE CONTRACT.

SEWER TRENCH DETAIL

NOTE:
PLUG TO BE COATED WITH MORTAR AND DRIVEN INTO PLACE WITH A WOODEN MALLET AND THEN SEALED WITH MORTAR.

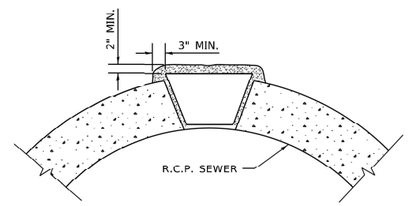

LIFTING HOLE PLUG DETAIL
FOR CONCRETE PIPE

NOTE:
1. ALL PLUG MATERIALS MUST COMPLY WITH 1042.16 OF THE IDOT SSRBC.

2. LIFT HOLES ON COMBINED SEWERS ARE PROHIBITED WHEN THE WATER TABLE IS WITHIN 2 FEET OF THE PIPE INVERT, OR IF THE PIPE IS FULLY SUBMERGED UNDER NORMAL CONDITIONS.

MODEL: Default
FILE NAME: pw:\\dot-pw.bentley.com:PWIDOT Documents\IDOT Offices\District 1\Projects\Das\Std 22x34\C1d\Data\CADsheets\bd47.dgn

USER NAME = Lawrence.DeManche	DESIGNED - M. GOMEZ	REVISED - K. SMITH 11-18-22	
	DRAWN -	REVISED -	
PLOT SCALE = 100.0000 ' / in.	CHECKED -	REVISED -	
PLOT DATE = 11/18/2022	DATE - 01-25-01	REVISED -	

STATE OF ILLINOIS
DEPARTMENT OF TRANSPORTATION

CITY OF CHICAGO
MISCELLANEOUS DETAILS

SCALE: NONE | SHEET 1 OF 1 SHEETS | STA. | TO STA.

F.A. RTE.	SECTION	COUNTY	TOTAL SHEETS	SHEET NO.
290	2019-192-B-R	COOK	237	211
	BD600–13 (BD–47)	CONTRACT NO. 62K65		
	ILLINOIS FED. AID PROJECT			

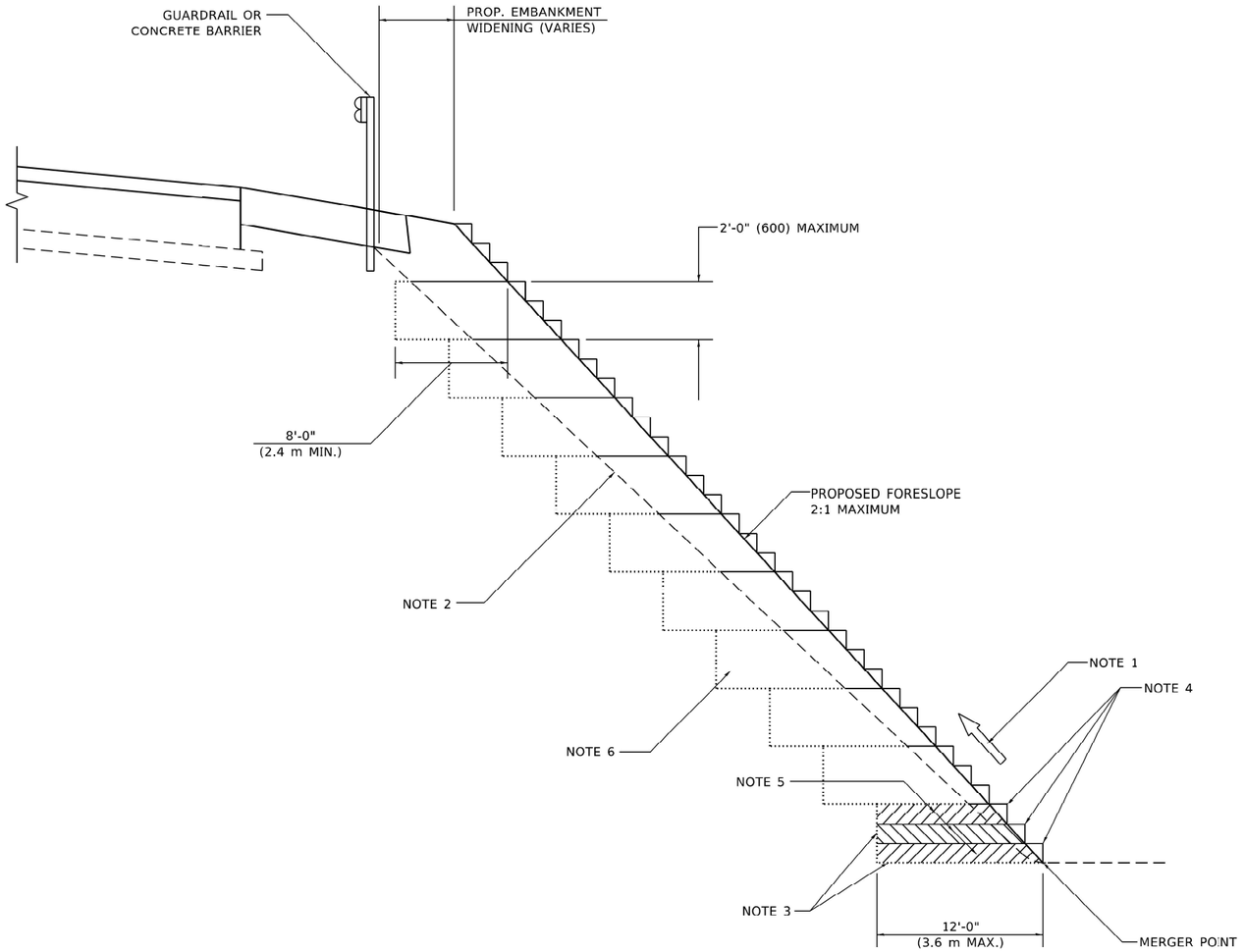

TYPICAL BENCHING DETAIL FOR EMBANKMENT

GENERAL NOTES

1. CONSTRUCT SUCCEEDING BENCH CUTS AND EMBANKMENT PLACEMENT AND COMPACTION FROM BOTTOM TO TOP IN STAIRSTEP FASHION.
2. EXISTING FORESLOPE PREPARED IN ACCORDANCE WITH ARTICLE 205.03 OF THE STANDARD SPECIFICATIONS.
3. BENCH CUT EXISTING SLOPE TYPICAL FOR EACH STEP.
4. TRIM TO FINAL SLOPE.
5. EQUAL 8-INCH (200) LIFTS OF EMBANKMENT COMPACTED IN ACCORDANCE WITH ARTICLE 205.05 OF THE STANDARD SPECIFICATIONS.

BASIS OF PAYMENT

1. EXCAVATION OF BENCH CUTS WITHIN EXISTING EMBANKMENT WILL BE PAID FOR AT THE CONTRACT UNIT PRICE PER CUBIC METER OR CUBIC YARD FOR "EARTH EXCAVATION". THIS PRICE WILL INCLUDE ALL LABOR AND MATERIAL, NO ADDITIONAL COMPENSATION WILL BE ALLOWED.

ALL DIMENSIONS ARE IN INCHES (MILLIMETERS) UNLESS OTHERWISE SHOWN.

MODEL: Default
FILE NAME: pw:\\dot-pw.bentley.com:PWIDOT\Documents\IDOT Offices\District 1\Projects\DistStd22x34\CADData\CADSheets\stds1.dgn

USER NAME = Lawrence.DeManche	DESIGNED -	REVISED - K. SMITH 11-18-22	
	DRAWN - CADD	REVISED -	
PLOT SCALE = 100.0000 ' / in.	CHECKED - S.E.B.	REVISED -	
PLOT DATE = 11/18/2022	DATE - 06-16-04	REVISED -	

STATE OF ILLINOIS
DEPARTMENT OF TRANSPORTATION

BENCHING DETAIL FOR EMBANKMENT WIDENING

SCALE: NONE | SHEET 1 OF 1 SHEETS | STA. | TO STA.

F.A. RTE.	SECTION	COUNTY	TOTAL SHEETS	SHEET NO.
290	2019-192-B-R	COOK	237	212
	BD-51	CONTRACT NO. 62K65		
	ILLINOIS FED. AID PROJECT			

STRAIGHT DETECTABLE WARNING UNITS

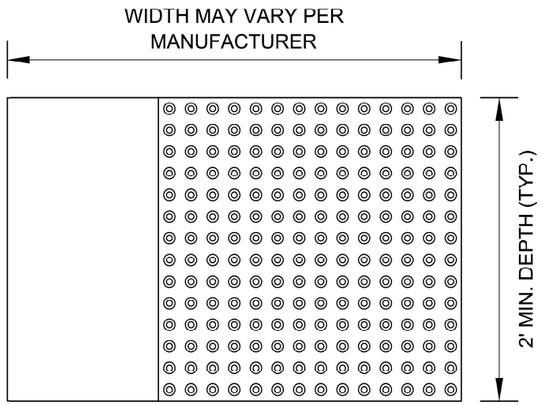

RADIAL DETECTABLE WARNING UNITS

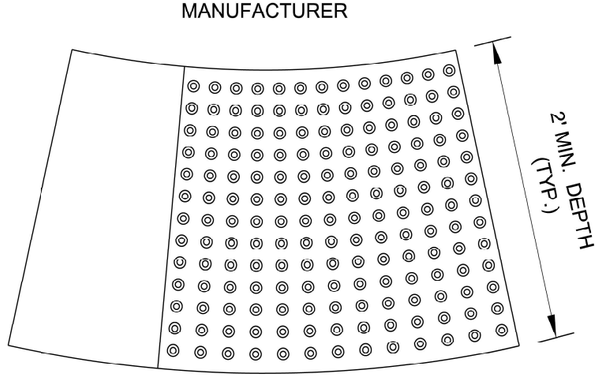

DETECTABLE WARNING UNIT SIZES

- VERIFY ALL DIMENSIONS WITH THE PRODUCT MANUFACTURER.

- IF USING RADIAL UNITS, VERIFY THAT THE CURB RADIUS MATCHES AVAILABLE UNIT RADII WITH THE PRODUCT MANUFACTURER.

GENERAL NOTE:
THE ROWS OF DOMES IN THE DETECTABLE WARNING MATERIAL MUST BE ALIGNED WITH THE PATH OF WHEELCHAIR TRAVEL WHICH IS REQUIRED TO BE PERPENDICULAR TO THE GRADE BREAK AT THE BOTTOM OF THE RAMP TO PERMIT TRACKING BETWEEN DOME ROWS. ON BLENDED TRANSITIONS OR FLUSH TRANSITIONS, WHERE RADIAL UNITS ARE SITUATED ABOUT THE CURB RADIUS, DOME ORIENTATION IS NOT SIGNIFICANT.

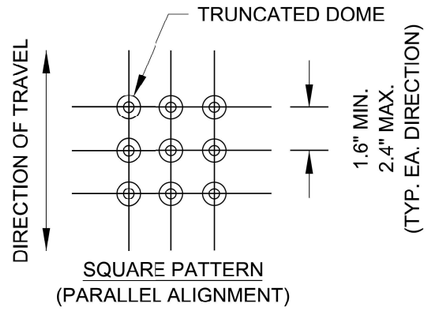

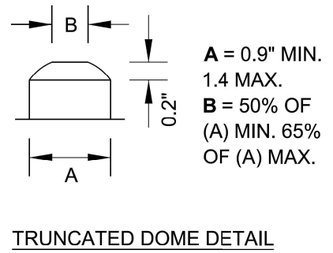

UNIT PATTERN & DOME DETAIL

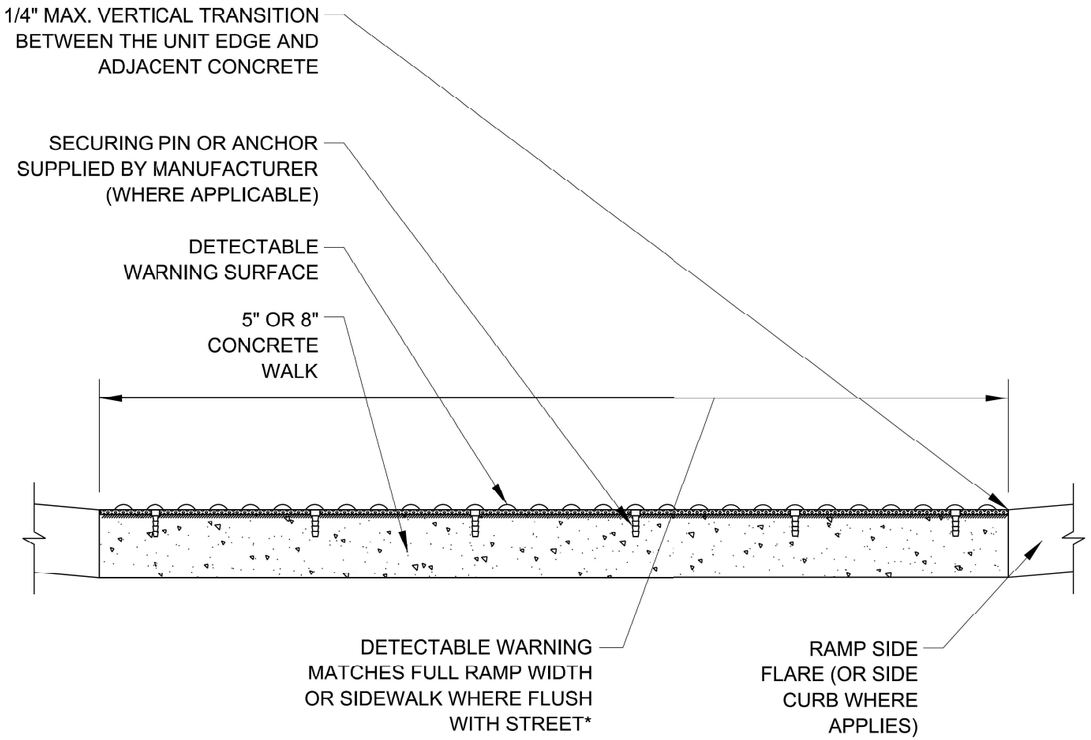

*A BORDER OF 2 INCHES OR LESS AROUND THE DETECTABLE WARNING SURFACE IS ACCEPTABLE IF REQUIRED FOR PROPER INSTALLATION OF THE DETECTABLE WARNING SURFACE PRODUCT

DETECTABLE WARNING UNIT SECTION

MODEL: Default
FILE NAME: pw:\\plannroom.dot.illinois.gov:PWIDOT\Documents\IDOT Offices\District 1\Projects\D6K65\d272x34\CADData\CADSheets\bd58.dgn

USER NAME = footemj	DESIGNED -	REVISED -
	DRAWN -	REVISED -
PLOT SCALE = 50.0000 ' / in.	CHECKED -	REVISED -
PLOT DATE = 10/8/2019	DATE - 06-20-2017	REVISED -

STATE OF ILLINOIS
DEPARTMENT OF TRANSPORTATION

CITY OF CHICAGO
DETECTABLE WARNINGS

SCALE: NONE | SHEET 1 OF 1 SHEETS | STA. | TO STA.

F.A. RTE.	SECTION	COUNTY	TOTAL SHEETS	SHEET NO.
290	2019-192-B-R	COOK	237	213
	BD 58	CONTRACT NO. 62K65		
	ILLINOIS FED. AID PROJECT			

bd58.dan 10/8/2019 11:11:28 AM User=footemj

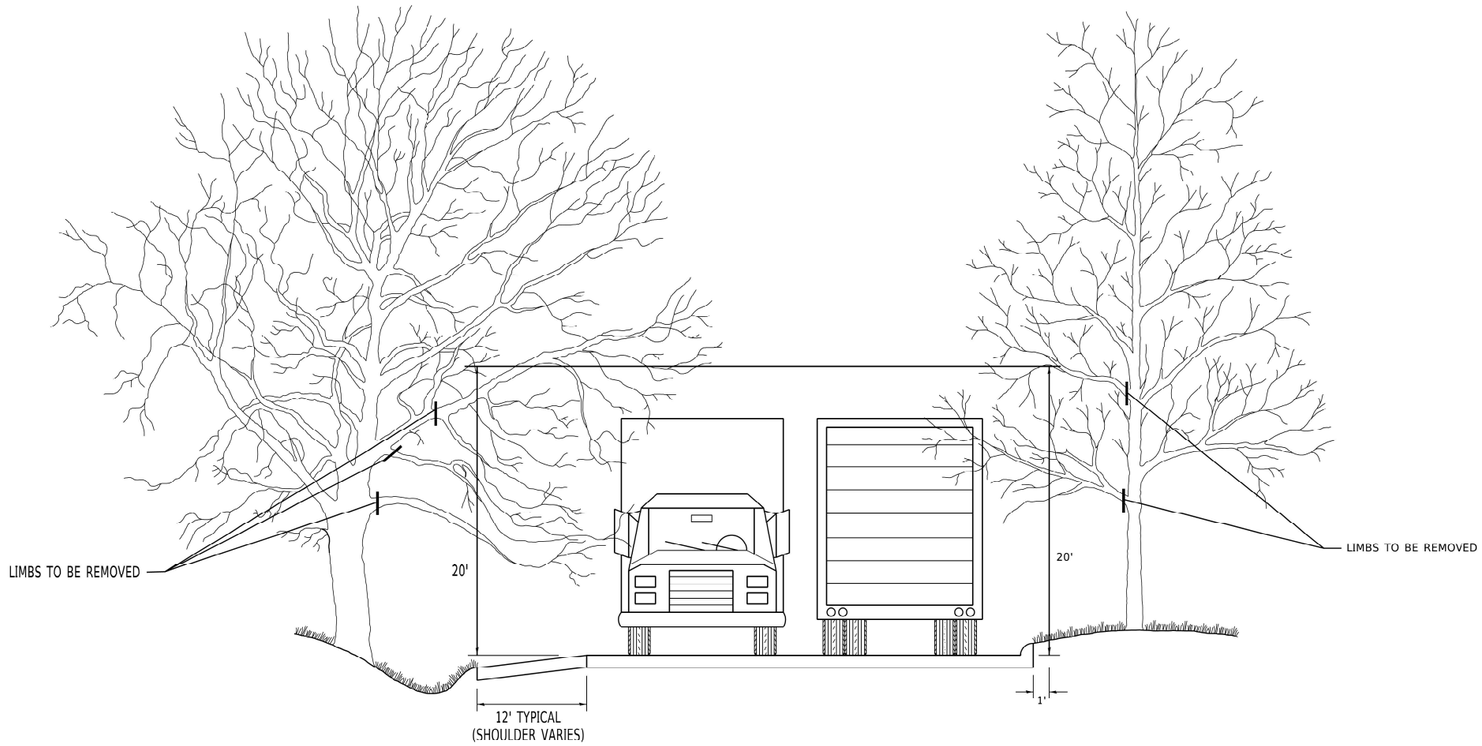

MODEL: Default
FILE NAME: pw:\\planroom.dot.illinois.gov:PWIDOTDocuments\IDOT Offices\District 1\Projects\D1st5\d22x34\CADData\CADsheets\bm20.dgn

USER NAME = footemj	DESIGNED -	REVISED - R. BORO 10-31-06	
	DRAWN -	REVISED -	
PLOT SCALE = 50.0000 ' / in.	CHECKED -	REVISED -	
PLOT DATE = 3/11/2019	DATE -	REVISED -	

STATE OF ILLINOIS
DEPARTMENT OF TRANSPORTATION

PRUNING FOR SAFETY AND EQUIPMENT CLEARANCE

SCALE: NONE | SHEET 1 OF 1 SHEETS | STA. | TO STA.

F.A. RTE.	SECTION	COUNTY	TOTAL SHEETS	SHEET NO.
290	2019-192-B-R	COOK	237	214
	BM–20	CONTRACT NO. 62K65		
	ILLINOIS FED. AID PROJECT			

Bm20.dgn 3/11/2019 2:15:32 PM User=footemj

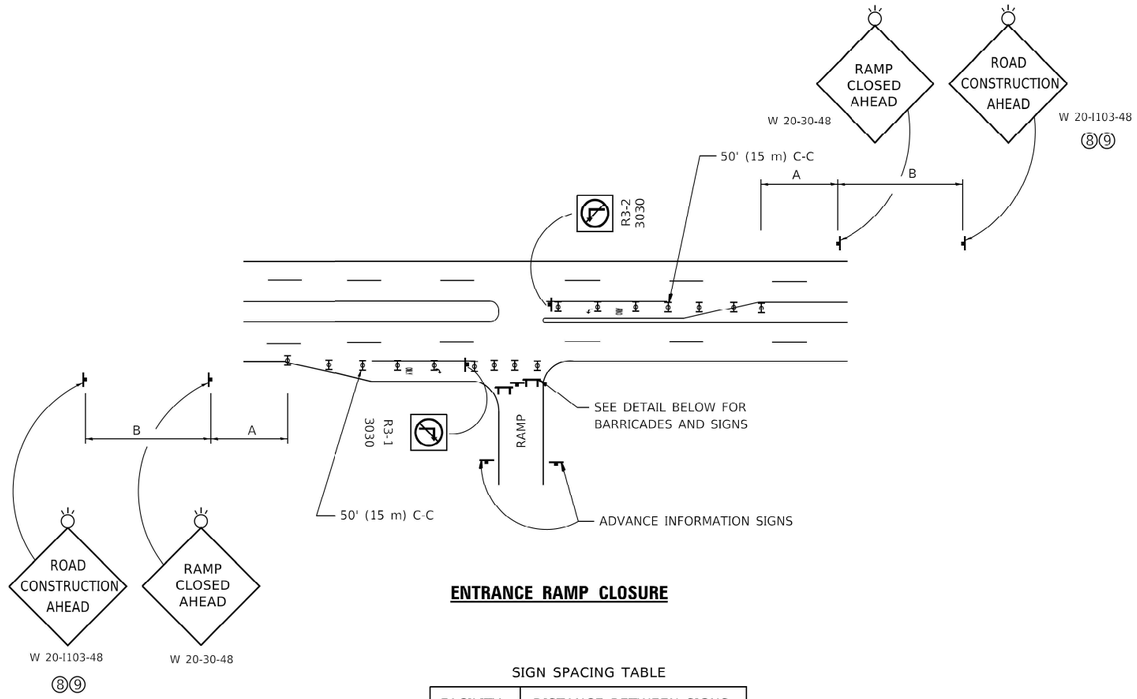

ENTRANCE RAMP CLOSURE

SIGN SPACING TABLE

FACILITY	DISTANCE BETWEEN SIGNS	
	A	B
EXPRESSWAY >24 HOURS	1000' (300 m)	1500' (450 m)
EXPRESSWAY ≤24 HOURS	500' (150 m)	500' (150 m)
ARTERIAL 55 MPH	500' (150 m)	500' (150 m)
ARTERIAL 50-45 MPH	350' (100 m)	350' (100 m)
ARTERIAL <45 MPH	200' (60 m)	200' (60 m)

DISTANCES MAY BE SHORTENED DEPENDING UPON THE PROXIMITY OF ADJACENT RAMPS OR INTERSECTIONS.

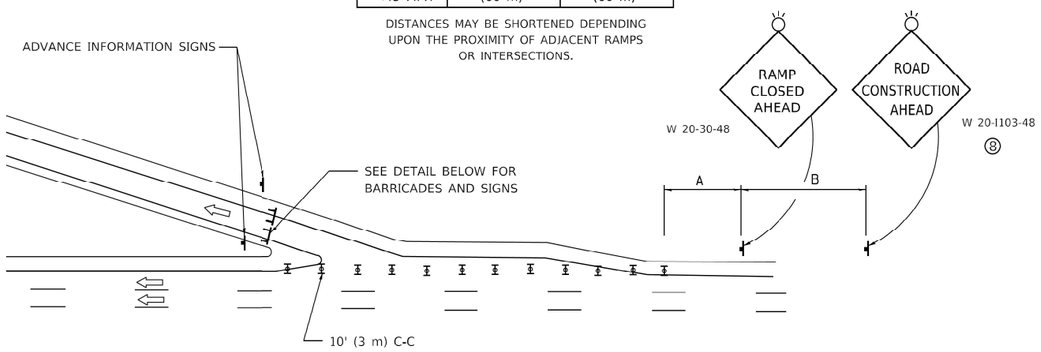

EXIT RAMP CLOSURE

SYMBOLS

TYPE II BARRICADE OR DRUM

TYPE III BARRICADE WITH 2 FLASHING LIGHTS

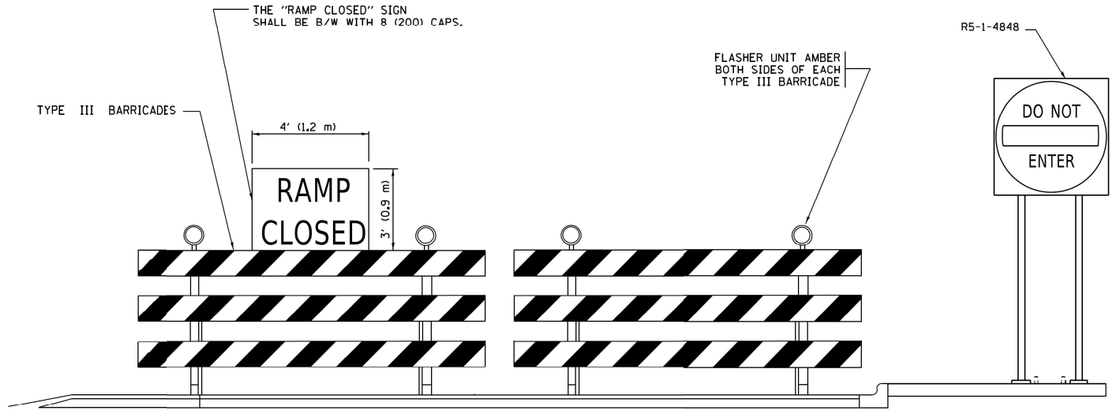

DETAIL FOR REQUIRED BARRICADES & SIGNS

RAMP CLOSURE ADVANCE WARNING SIGN

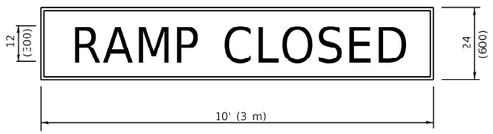

BLACK LEGEND ON ORANGE BACKGROUND MOUNTED DIAGONALLY
E MOD FONT
1 (25) BORDER
THESE SIGNS ARE REQUIRED ON ALL THE EXIT GUIDE SIGNS FOR EXIT RAMPS THAT WILL BE CLOSED FOR MORE THAN FOUR (4) CONSECUTIVE DAYS

RAMP CLOSURE ADVANCE INFORMATION SIGN

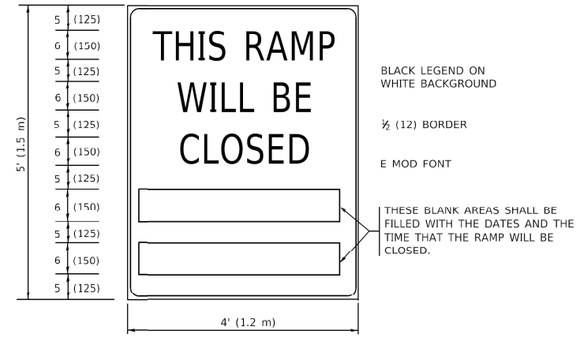

BLACK LEGEND ON WHITE BACKGROUND

½ (12) BORDER

E MOD FONT

THESE BLANK AREAS SHALL BE FILLED WITH THE DATES AND THE TIME THAT THE RAMP WILL BE CLOSED.

THESE SIGNS ARE REQUIRED ON BOTH SIDES OF THE RAMP, MINIMUM OF 1 WEEK IN ADVANCE OF THE CLOSURE.

THESE SIGNS SHALL BE FABRICATED AND PAID FOR ACCORDING TO THE TEMPORARY INFORMATION SIGNING SPECIAL PROVISION

GENERAL NOTES:

1. CONES MAY BE SUBSTITUTED FOR DRUMS OR TYPE II BARRICADES DURING DAY OPERATIONS. CONES SHALL BE A MINIMUM OF 28 (700) HIGH.
2. VERTICAL BARRICADES SHALL NOT BE USED FOR RAMP CLOSURES.
3. A FLAGGER SHALL BE POSITIONED AT EACH CLOSED RAMP THAT IS OPEN TO CONSTRUCTION VEHICLES, PRECEEDED BY A W20-7 FLAGGER WARNING SIGN.
4. ALL ROUTE MARKERS AND TRAILBLAZER ASSEMBLIES WHICH DIRECT MOTORISTS TO A CLOSED ENTRANCE RAMP SHALL BE COVERED WHEN THE RAMP IS CLOSED FOR MORE THAN FOUR (4) DAYS.
5. THE SIGNING AND BARRICADING WHICH IS REQUIRED BY THIS DETAIL SHALL BE INCLUDED IN THE COST OF TRAFFIC CONTROL AND PROTECTION (EXPRESSWAYS).
6. AUTHORIZATION FROM THE DISTRICT'S BUREAU OF TRAFFIC IS REQUIRED FOR ALL RAMP CLOSURES.
7. THE RAMP CLOSURE ADVANCE INFORMATION SIGNS SHALL BE ERECTED IF THE CLOSURE TIME EXCEEDS TWENTY-FOUR (24) HOURS. ADDITIONAL ADVANCE WARNING SIGNS ON EXIT GUIDE SIGNING WILL BE REQUIRED FOR EXIT RAMP CLOSURES THAT EXCEED FOUR (4) DAYS IN LENGTH
8. ROAD CONSTRUCTION AHEAD SIGNS MAY BE OMITTED WHEN THIS DETAIL IS USED IN CONJUNCTION WITH OTHER TRAFFIC CONTROL THAT ALREADY INCLUDES A ROAD CONSTRUCTION AHEAD SIGN.
9. ARTERIAL ROAD CONSTRUCTION AHEAD SIGNS SHALL BE INSTALLED ON THE LEFT SIDE OF TRAFFIC IF THE MEDIAN IS MORE THAN 10 FT WIDE.

ALL DIMENSIONS ARE IN INCHES (MILLIMETERS) UNLESS OTHERWISE SHOWN.

USER NAME = Lawrence.DeManche	DESIGNED - D.W.S.	REVISED - S.P.B._12-09	**STATE OF ILLINOIS DEPARTMENT OF TRANSPORTATION**	**ENTRANCE_AND_EXIT_RAMP CLOSURE_DETAILS**	
	DRAWN -	REVISED - M.D._06-13			
PLOT SCALE = 100.0000 ' / in.	CHECKED -	REVISED - M.D._01-18			
PLOT DATE = 5/3/2024	DATE - 02-83	REVISED - D.S._05-24		SCALE: NONE SHEET 1 OF 1 SHEETS STA. TO STA.	

F.A. RTE.	SECTION	COUNTY	TOTAL SHEETS	SHEET NO.
290	2019-192-B-R	COOK	237	215
	TC-08	CONTRACT NO. 62K65		
	ILLINOIS FED. AID PROJECT			

MODEL: Default
FILE NAME: pw:\\dot-pw.bentley.com:PWDOT\Documents\IDOT Offices\District 1\Projects\Dist\5022x34\ACTDDData\CADSheets\tc08.dgn

SINGLE LANE WEAVE

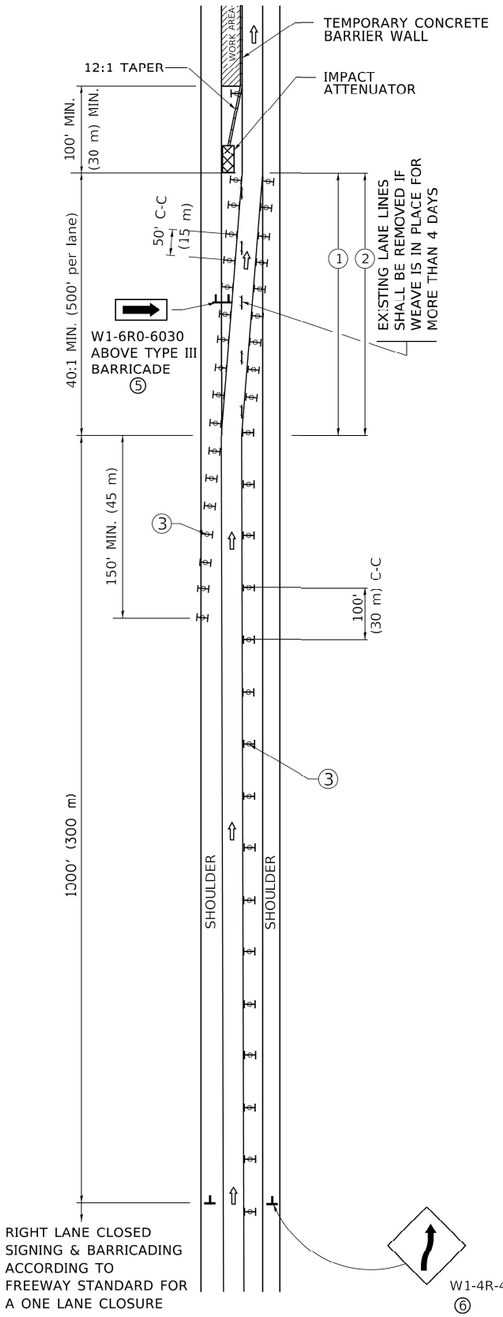

MULTI–LANE WEAVE

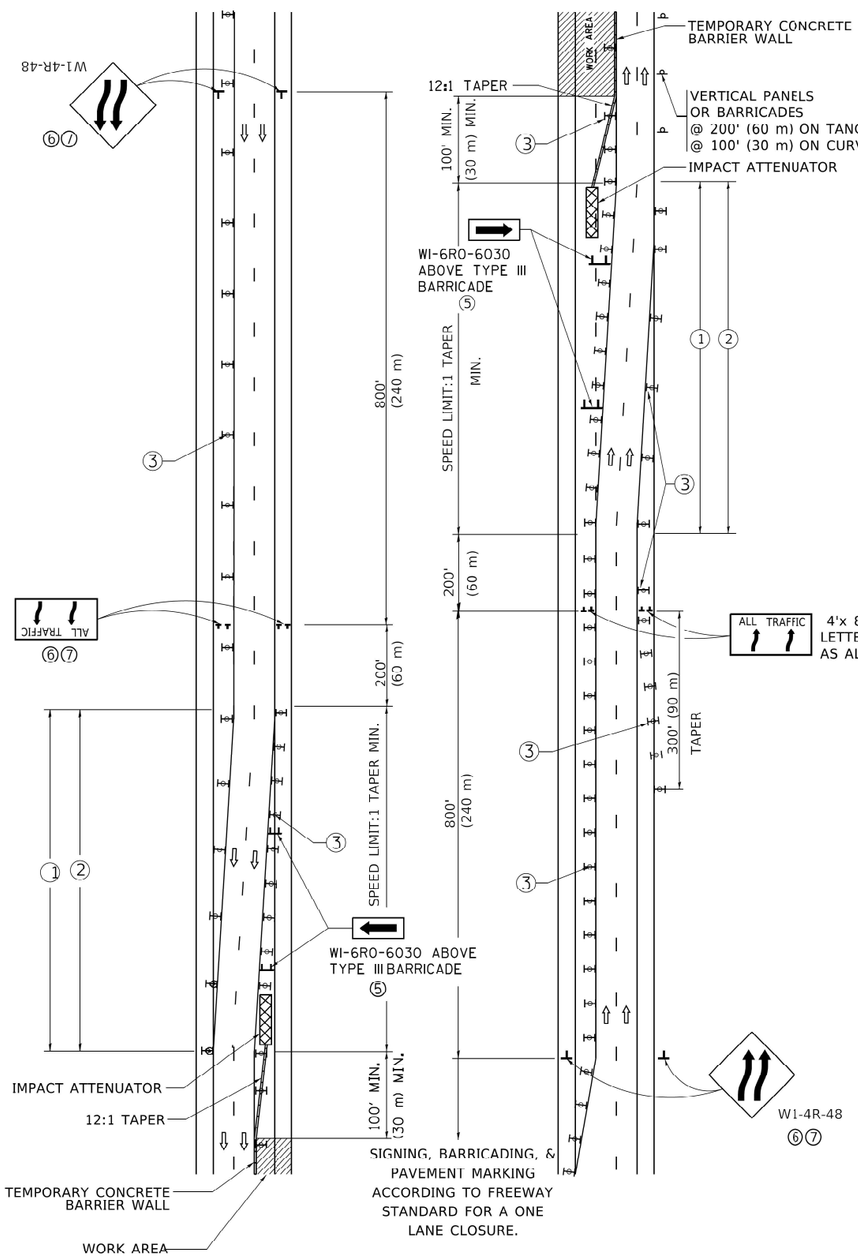

GENERAL NOTES:

① EXISTING CONFLICTING PAVEMENT MARKING LINES SHALL BE REMOVED. PAVEMENT MARKING REMOVAL SHALL NOT BE REQUIRED FOR SINGLE LANE WEAVES UNDER 4 DAYS IN DURATION.

② CONTINOUS REFLECTIVE TEMPORARY PAVEMENT MARKING TAPE SHALL BE PLACED THROUGHOUT THE TAPER AND FOR 300' (90 m) ALONG SIDE THE WORK AREA WHERE THE CLOSURE TIME IS GREATER THAN FOURTEEN DAYS. THE LEFT EDGE LINE SHALL BE YELLOW AND THE RIGHT EDGE LINE SHALL BE WHITE. FOR MULTI-LANE WEAVES LANE LINES SHALL BE 5 INCH, 10'-30' (3 m-9 m) SKIP DASH, WHITE.

③ PLASTIC DRUMS WITH STEADY BURN LIGHTS AT 50' (15 m) C-C SPACING IN TAPERS AND 100' (30 m) C-C SPACING IN TANGENTS.

④ ALL SIGNS SHALL BE POST MOUNTED IF THE CLOSURE TIME EXCEEDS FOUR DAYS.

⑤ TYPE III BARRICADES MAY BE OMMITTED FOR SINGLE-LANE WEAVES UNDER 24-HOURS IN DURATION. W1-6 SIGNS WILL STILL BE REQUIRED. IF THE WIDTH OF OFFSET IS LESS THAN 6' THEN THE TYPE III BARRICADE WITH ATTACHED ARROW SIGN PANEL CAN BE ELIMINATED IN THE TAPER AREAS.

⑥ WHEN THE LENGTH OF THE SHIFTED SEGMENT (DISTANCE BETWEEN WEAVE POINTS) IS LESS THAN 1500', DOUBLE REVERSE CURVE SIGNS (W24-1) SHOULD BE USED INSTEAD OF THE REVERSE CURVE (W1-4) SIGNS. ARROWS ON THE 4'X8' "ALL TRAFFIC" SIGNS SHALL BE THE SAME SHAPE.

⑦ THE NUMBER OF ARROWS ON THESE SIGNS SHALL MATCH THE NUMBER OF LANES OPEN TO TRAFFIC.

ALL TRAFFIC — 4'x 8' (1.2 m x 2.4 m); 1 (25) BORDER; 10 (250) CAPITAL LETTERS BACKGROUND SHEETING SHALL BE THE SAME AS ALL DIAMOND SHAPED CONSTRUCTION SIGNS.

SYMBOLS

- DIRECTION OF TRAFFIC
- WORK AREA
- SIGN ON PORTABLE OR PERMANENT SUPPORT
- TYPE II BARRICADE OR DRUM WITH MONO-DIRECTIONAL STEADY BURNING LIGHT
- TEMPORARY CONCRETE BARRIER WALL
- IMPACT ATTENUATOR



ALL DIMENSIONS ARE IN INCHES (MILLIMETERS) UNLESS OTHERWISE SHOWN

USER NAME = footemj	DESIGNED - D.W.S.	REVISED - J.A.F. 02-06
	DRAWN -	REVISED - S.P.B. 01-07
PLOT SCALE = 50.0000 ' / in.	CHECKED -	REVISED - S.P.B. 12-09
PLOT DATE = 3/4/2019	DATE - 02-87	REVISED - M.D. 06-13

STATE OF ILLINOIS
DEPARTMENT OF TRANSPORTATION

TRAFFIC CONTROL DETAILS FOR FREEWAY SINGLE & MULTI–LANE WEAVE

SCALE: NONE | SHEET 1 OF 1 SHEETS | STA. | TO STA.

F.A. RTE.	SECTION	COUNTY	TOTAL SHEETS	SHEET NO.
290	2019-192-B-R	COOK	237	216
	TC-09	CONTRACT NO. 62K65		
	ILLINOIS	FED. AID PROJECT		

MODEL: Default
FILE NAME: pw:\\IL084EBIDINTEG.illinois.gov:PWIDOT\Documents\IDOT Offices\District 1\Projects\Std Std2x34\CADData\CADs-sets\tc09.dgn

tc09.dgn 3/4/2019 10:24:46 AM User=footemj

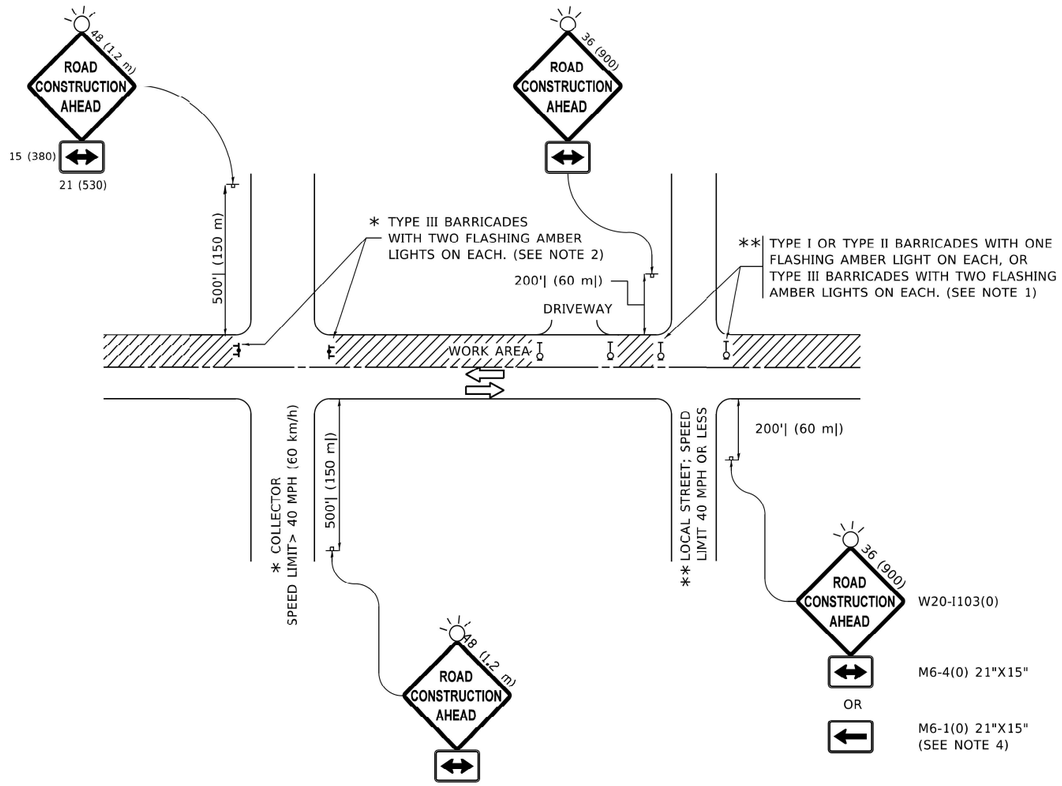

NOTES:

1. SIDE ROAD WITH A SPEED LIMIT OF 40 MPH (60 km/h) OR LESS AS SHOWN ON THE DRAWING AND AS DIRECTED BY THE ENGINEER:

   a) ONE "ROAD CONSTRUCTION AHEAD" SIGN 36 x 36 (900x900) WITH A FLASHER MOUNTED ON IT APPROXIMATELY 200' (60 m) IN ADVANCE OF THE MAIN ROUTE.

   b) THE CLOSED PORTION OF THE MAIN ROUTE SHALL BE PROTECTED BY BLOCKING WITH TYPE I, TYPE II OR TYPE III BARRICADES, 1/3 OF THE CROSS SECTION OF THE CLOSED PORTION.

2. SIDE ROAD WITH A SPEED LIMIT GREATER THAN 40 MPH (60 km/h) AS SHOWN ON THE DRAWING AND AS DIRECTED BY THE ENGINEER:

   a) ONE "ROAD CONSTRUCTION AHEAD" SIGN 48 x 48 (1.2 m x 1.2 m) WITH A FLASHER MOUNTED ON IT APPROXIMATELY 500' (150 m) IN ADVANCE OF THE MAIN ROUTE.

   b) THE CLOSED PORTION OF THE MAIN ROUTE SHALL BE PROTECTED BY BLOCKING WITH TYPE III BARRICADES, 1/2 OF THE CROSS SECTION OF THE CLOSED PORTION.

3. CONES MAY BE SUBSTITUTED FOR BARRICADES OR DRUMS AT HALF THE SPACING DURING DAY OPERATIONS. CONES SHALL BE A MINIMUM OF 28 (710) IN HEIGHT.

4. WHEN THE SIDE ROAD LIES BETWEEN THE BEGINNING OF THE MAINLINE SIGNING AND THE WORK ZONE, A SINGLE HEADED ARROW (M6-1) SHALL BE USED IN LIEU OF THE DOUBLE HEADED ARROW (M6-4).

5. WHEN WORK IS BEING PERFORMED ON A SIDE ROAD OR DRIVEWAY, FOLLOW THE APPLICABLE STANDARD(S). THE DIRECTIONAL ARROW (M6-1 OR M6-4) SHALL BE COVERED OR REMOVED WHEN NO LONGER CONSISTENT WITH THE TRAFFIC CONTROL SET-UP.

6. ADVANCE WARNING SIGNS ARE TO BE OMITTED ON DRIVEWAYS UNLESS OTHERWISE SPECIFIED IN THE PLANS OR BY THE ENGINEER.

7. THE TRAFFIC CONTROL AND PROTECTION FOR SIDE ROADS, INTERSECTIONS, AND DRIVEWAYS SHALL BE INCLUDED IN THE COST OF SPECIFIED TRAFFIC CONTROL STANDARDS OR ITEMS.

All dimensions are in inches (millimeters) unless otherwise shown.

MODEL: Default
FILE NAME: pw:\\ildot-pw.bentley.com:PWIDOT\Documents\IDOT Offices\District 1\Projects\DistStd22x34\CADData\CADsheets\lc10.dgn

USER NAME = Lawrence.DeManche	DESIGNED - L.H.A.	REVISED - T. RAMMACHER 01-06-00	STATE OF ILLINOIS DEPARTMENT OF TRANSPORTATION
	DRAWN -	REVISED - A. SCHUETZE 07-01-13	
PLOT SCALE = 100.0000 ' / in.	CHECKED -	REVISED - A. SCHUETZE 09-15-16	
PLOT DATE = 5/3/2024	DATE - 06-89	REVISED - D. SENDERAK 05-03-24	

TRAFFIC CONTROL AND PROTECTION FOR SIDE ROADS, INTERSECTIONS, AND DRIVEWAYS

SCALE: NONE | SHEET 1 OF 1 SHEETS | STA. TO STA.

F.A.I RTE.	SECTION	COUNTY	TOTAL SHEETS	SHEET NO.
290	2019-192-B-R	COOK	237	217
	TC-10	CONTRACT NO. 62K65		
		ILLINOIS FED. AID PROJECT		

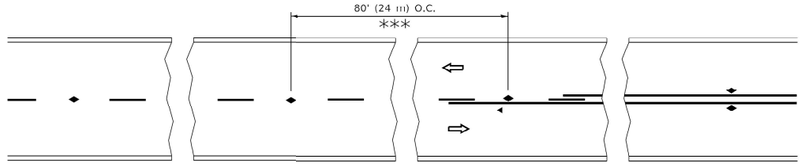

*** REDUCE TO 40' (12 m) O.C. ON CURVES WITH POSTED OR ADVISORY SPEED 45 M.P.H. (70 km/h) OR LESS.

TWO–LANE/TWO–WAY

SEE FIGURE 3B-14 MUTCD

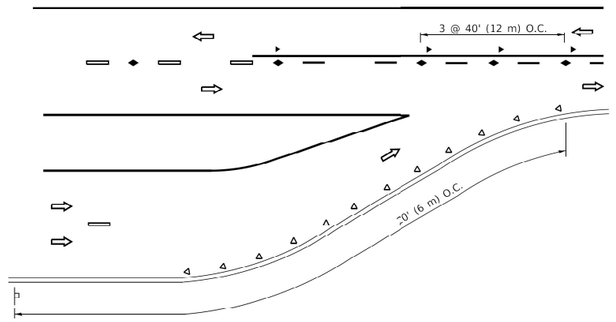

LANE REDUCTION TRANSITION

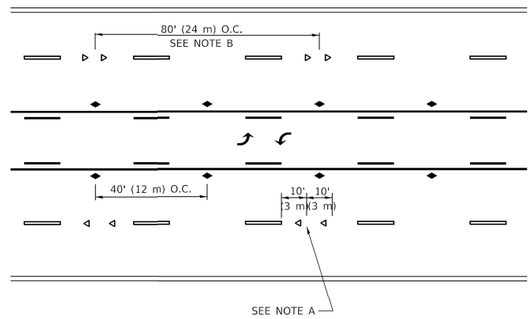

TWO–WAY LEFT TURN

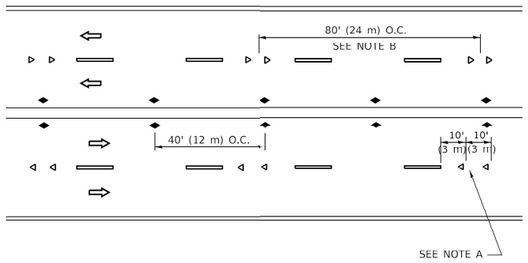

MULTI–LANE/UNDIVIDED

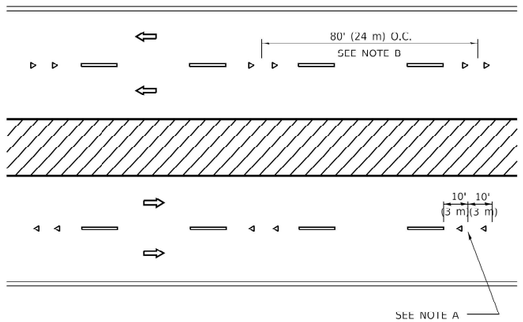

MULTI–LANE/DIVIDED

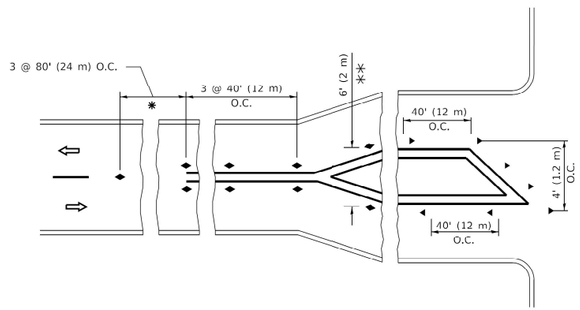

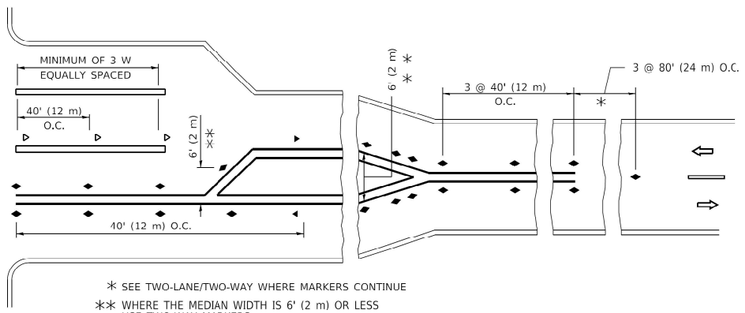

* SEE TWO-LANE/TWO-WAY WHERE MARKERS CONTINUE

** WHERE THE MEDIAN WIDTH IS 6' (2 m) OR LESS USE TWO-WAY MARKERS.

TURN LANES

GENERAL NOTES

1. MARKERS USED WITH DASHED LINES SHALL BE CENTERED IN THE GAP BETWEEN SEGMENTS.
2. MARKERS USED ADJACENT TO SOLID LINES SHALL BE OFFSET 2 TO 3 (50 TO 75) TOWARD TRAFFIC AS SHOWN.
3. MARKERS THROUGH TANGENTS LESS THAN 500' (150 m) IN LENGTH BETWEEN CURVES SHALL BE INSTALLED AT THE LESSER OF THE TWO CURVE SPACINGS.
4. MARKERS ARE TO BE USED ADJACENT TO BOTH SOLID WHITE LINES IN DUAL LEFT TURN LANES

SYMBOLS

- YELLOW STRIPE
- WHITE STRIPE
- ONE-WAY AMBER MARKER
- ONE-WAY CRYSTAL MARKER (W/O)
- TWO-WAY AMBER MARKER

LANE MARKER NOTES

A. USE DOUBLE LANE LINE MARKERS SPACED AS SHOWN.

B. REDUCE TO 40' (12 m) O.C. ON CURVES WHERE ADVISORY SPEEDS ARE 10 M.P.H (20 km/h) LOWER THAN POSTED SPEEDS.

DESIGN NOTES

1. DOUBLE LANE LINE MARKERS SHALL BE USED UNLESS SPECIFIED OTHERWISE.
2. EXCEPT AS SHOWN ON THE LANE REDUCTION TRANSITION AND FREEWAY EXIT RAMP DETAIL, MARKERS ARE NOT TO BE SPECIFIED ON RIGHT EDGE LINES.
3. THE EXACT MARKER LIMITS, SPACING, AND COLOR SHALL BE INCLUDED IN THE PLANS WHEN STANDARD SPECIFICATIONS ARE NOT BEING USED.
4. MARKERS SHOULD NOT BE USED ALONGSIDE CURBS EXCEPT FOR EXTREMELY SHORT SECTIONS OF CURBS WHERE NOT MORE THAN TWO MARKERS WOULD BE INVOLVED.

All dimensions are in inches (millimeters) unless otherwise shown.

MODEL: Default
FILE NAME: pw:\\IL084EBIDINTEG.illinois.gov:PWIDOT\Documents\IDOT Offices\District 1\Projects\DistStd2x3\ACADdata\CADs\sets\tc11.dgn

USER NAME = footemj	DESIGNED -	REVISED - T. RAMMACHER 03-12-99	
	DRAWN -	REVISED - T. RAMMACHER 01-06-00	
PLOT SCALE = 50.0000 ' / in.	CHECKED -	REVISED - C. JUCIUS 09-09-09	
PLOT DATE = 3/4/2019	DATE -	REVISED - C. JUCIUS 07-01-13	

STATE OF ILLINOIS
DEPARTMENT OF TRANSPORTATION

TYPICAL APPLICATIONS
RAISED REFLECTIVE PAVEMENT MARKERS (SNOW–PLOW RESISTANT)

SCALE: NONE | SHEET 1 OF 1 SHEETS | STA. | TO STA.

F.A.I RTE.	SECTION	COUNTY	TOTAL SHEETS	SHEET NO.
290	2019-192-B-R	COOK	237	218
	TC-11	CONTRACT NO. 62K65		
	ILLINOIS FED. AID PROJECT			

tc11.dgn 3/4/2019 10:29:08 AM User=footemj

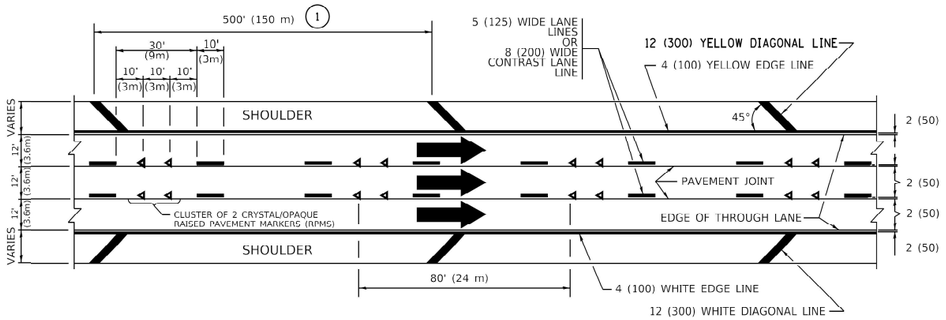

TYPICAL EDGE LINES & LANE LINES

PAVEMENT MARKING MATERIALS

1. THERMOPLASTIC PAVEMENT MARKING LINE SHALL BE USED FOR ALL EDGE LINES, GORE LINES, AND DIAGONAL LINES ON HMA PAVEMENTS.
2. POLYUREA OR MODIFIED URETHANE PAVEMENT MARKING LINE SHALL BE USED FOR ALL EDGE LINES, GORE LINES, AND DIAGONAL LINES ON PCC PAVEMENTS.
3. PREFORMED PLASTIC PAVEMENT MARKING LINE TYPE D, INLAID OR GROOVE IN, SHALL BE USED FOR ALL LANE LINES ON HMA PAVEMENTS.
4. CONTRAST PREFORMED PLASTIC PAVEMENT MARKING LINE TYPE B, GROOVE IN, SHALL BE USED FOR ALL LANE LINES ON PCC PAVEMENT.

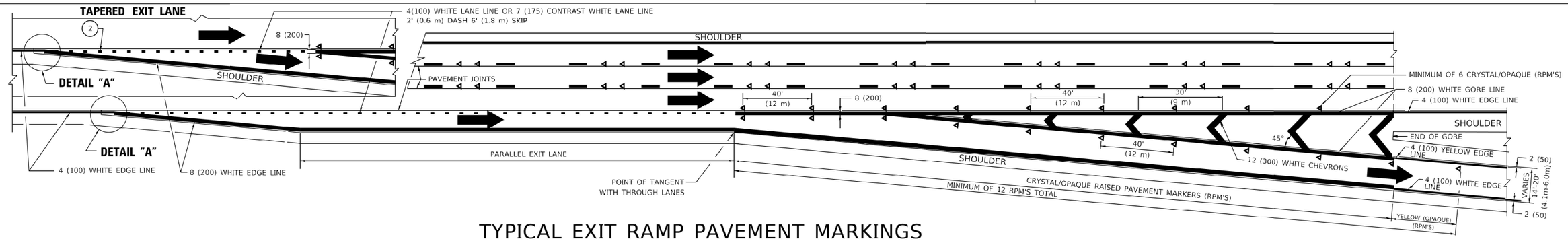

TYPICAL EXIT RAMP PAVEMENT MARKINGS

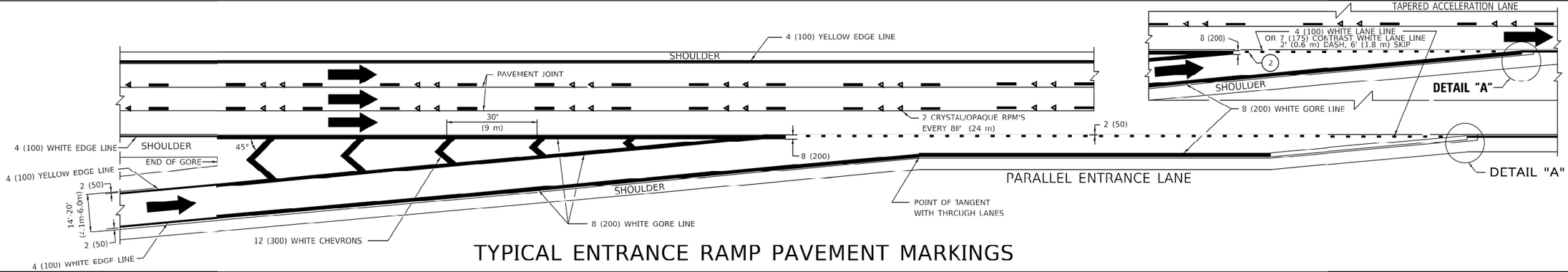

TYPICAL ENTRANCE RAMP PAVEMENT MARKINGS

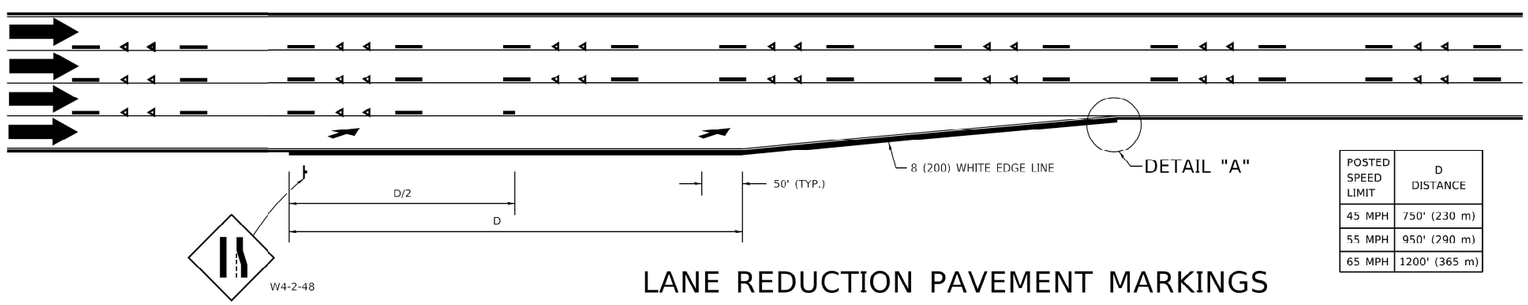

POSTED SPEED LIMIT	D DISTANCE
45 MPH	750' (230 m)
55 MPH	950' (290 m)
65 MPH	1200' (365 m)

LANE REDUCTION PAVEMENT MARKINGS

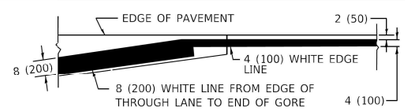

DETAIL "A"

NOTES:

1. THE DIAGONAL LINES SHALL BE SPACED AT 40' (12 m) C-C ACROSS ALL STRUCTURES WHICH ARE 500' (150 m) OR LESS IN LENGTH. THE DIAGONAL LINES ARE NOT REQUIRED ON SHOULDERS WHICH ARE 6' (1.8 m) OR LESS IN WIDTH.
2. 4" (2' DASH, 6' SKIP) MARKING ON TAPERED ENTRANCE AND EXIT RAMP SHALL BE OMITTED ON TANGENT SECTIONS.

MODEL: Default
FILE NAME: pw:\\dot-pw.bentley.com:PWDOT\Documents\DOT Offices\District 1\Projects\Std22x34\CADData\CADsheets\tc12.dgn

USER NAME = Lawrence.DeManche	DESIGNED - D.W.S.	REVISED - S.P.B. 01-10	
	DRAWN -	REVISED - M.D. 05-13	
PLOT SCALE = 100.0000 ' / in.	CHECKED -	REVISED - M.D. 09-17	
PLOT DATE = 11/18/2022	DATE - 01-90	REVISED - K. SMITH 11-18-22	

STATE OF ILLINOIS
DEPARTMENT OF TRANSPORTATION

MULTI-LANE FREEWAY
PAVEMENT MARKING DETAILS

SCALE: NONE | SHEET 1 OF 2 SHEETS | STA. | TO STA.

F.A.I RTE.	SECTION	COUNTY	TOTAL SHEETS	SHEET NO.
290	2019-192-B-R	COOK	237	219
	TC-12	CONTRACT NO. 62K65		
	ILLINOIS	FED. AID PROJECT		

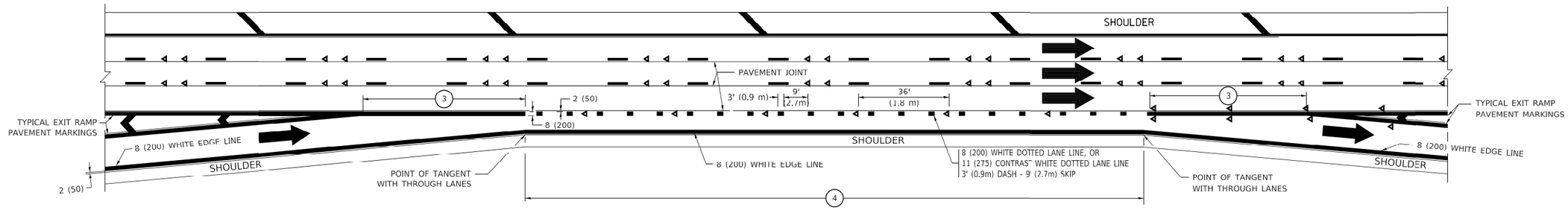

AUXILIARY LANE MARKINGS

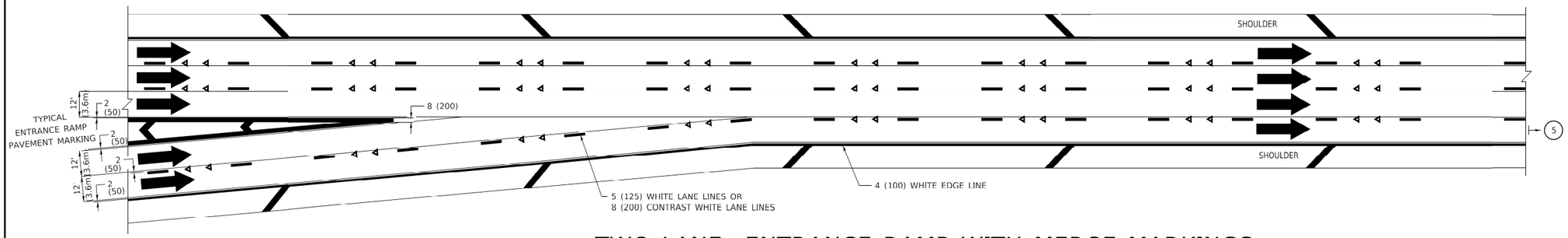

TWO LANE ENTRANCE RAMP WITH MERGE MARKINGS

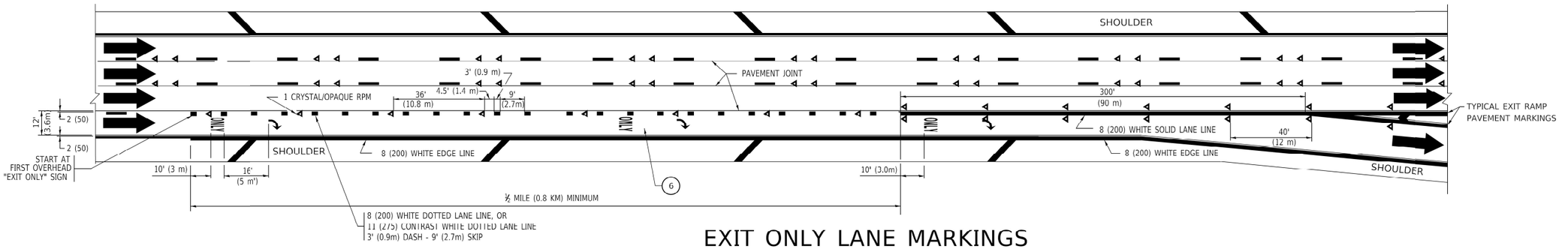

EXIT ONLY LANE MARKINGS

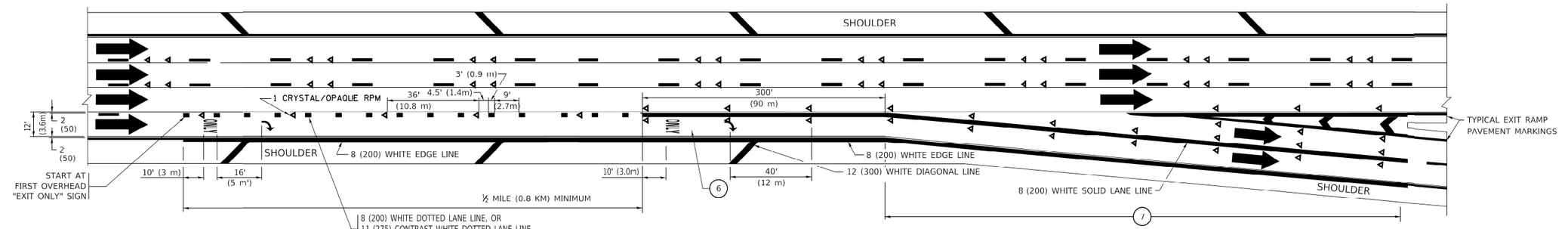

EXIT ONLY WITH OPTION LANE MARKINGS

NOTES:

3. OMIT WHEN LENGTH OF AUXILIARY LANE IS LESS THAN 500' (150 m).
4. 8-INCH WIDE DOTTED LANE LINE MARKINGS SHALL BE USED WHEN THE LENGTH OF THE AUXILIARY LANE IS 2 MILES OR LESS.
5. FOR TWO-LANE ENTRANCE RAMP, IF RIGHT LANE ENDS, USE TYPICAL ENTRANCE RAMP PAVEMENT MARKINGS.
6. ONLY AND ARROWS EQUALLY SPACED, 500' (150 m) MAXIMUM SPACING. FULL SIZE LETTERS AND ARROW SHALL BE USED..
7. CONTINUE 8" SOLID LANE LINE THROUGH EXIT TO END OF PAVED GORE.

USER NAME = footemj	DESIGNED - D.W.S.	REVISED - J.A.F. 02-06	
	DRAWN -	REVISED - S.P.B. 01-07	
PLOT SCALE = 50.0000 ' / in.	CHECKED -	REVISED - S.P.B. 01-10	
PLOT DATE = 3/4/2019	DATE - 01-90	REVISED - M.D. 09-17	

STATE OF ILLINOIS
DEPARTMENT OF TRANSPORTATION

MULTI–LANE FREEWAY
PAVEMENT MARKING DETAILS

SCALE: NONE | SHEET 1 OF 2 SHEETS | STA. | TO STA.

F.A.I RTE.	SECTION	COUNTY	TOTAL SHEETS	SHEET NO.
290	2019-192-B-R	COOK	237	220
	TC–12	CONTRACT NO. 62K65		
	ILLINOIS FED. AID PROJECT			

MODEL: Default
FILE NAME: pw:\\IL084EBI0INTEG.illinois.gov:PWIDOT\Documents\IDOT Offices\District 1\Projects\Dist\Std2x3\CADData\CADs-sheets\tc12-sign

tc12.dgn 3/4/2019 10:32:33 AM User=footemj

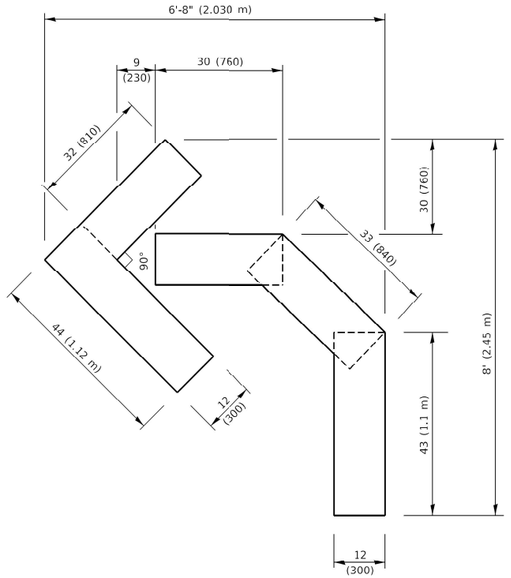

QUANTITY

4 (100) LINE = 45.5 ft. (13.9 m)
15.2 sq. ft. (1.41 sq. m)

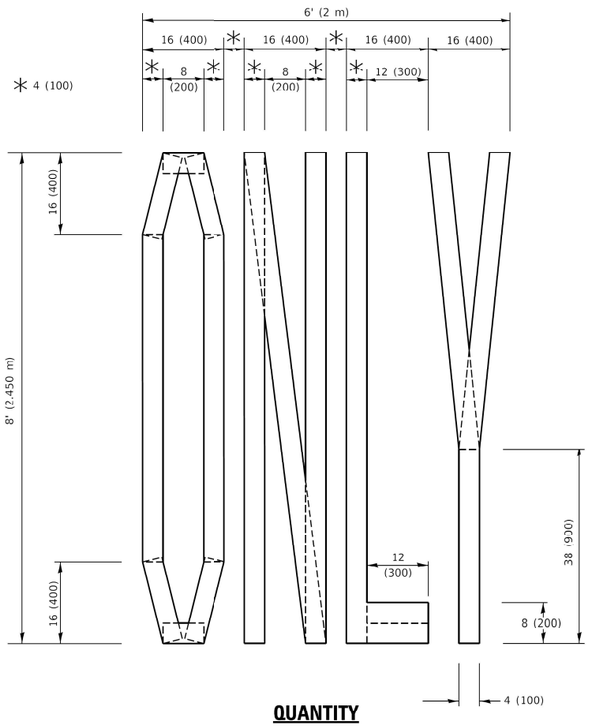

QUANTITY

4 (100) LINE = 64.1 ft. (19.5 m)
21.4 sq. ft. (1.99 sq. m)

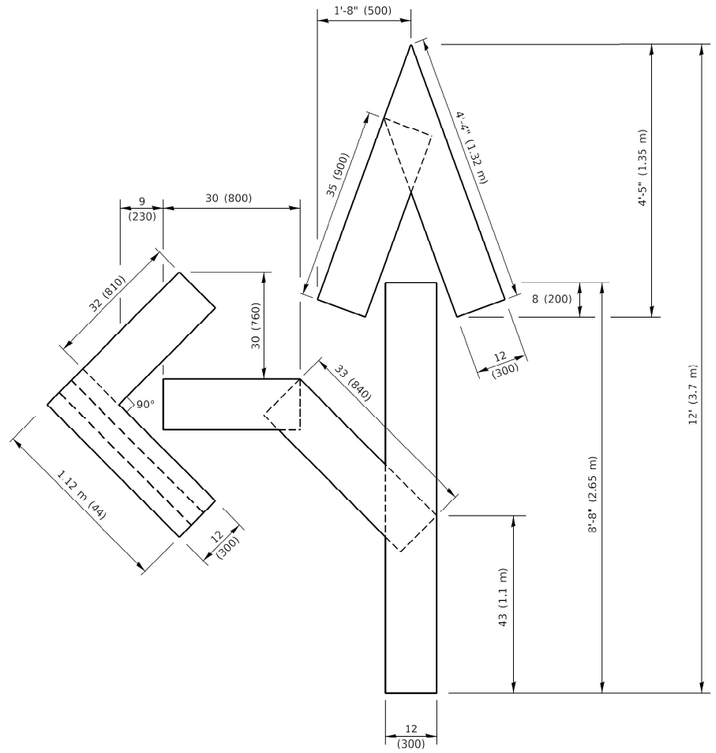

QUANTITY

4 (100) LINE = 82.5 ft. (25.1 m)
27.5 sq. ft. (2.53 sq. m)

NOTE:

ALL QUANTITIES OF PLACEMENT ARE REPRESENTED IN LINEAR FEET OF 4" LINES TO MATCH THE 4" TEMPORARY TAPE PAY ITEM AND REPRESENTS THE TOTAL QUANTITY OF 4" TAPE REQUIRED.

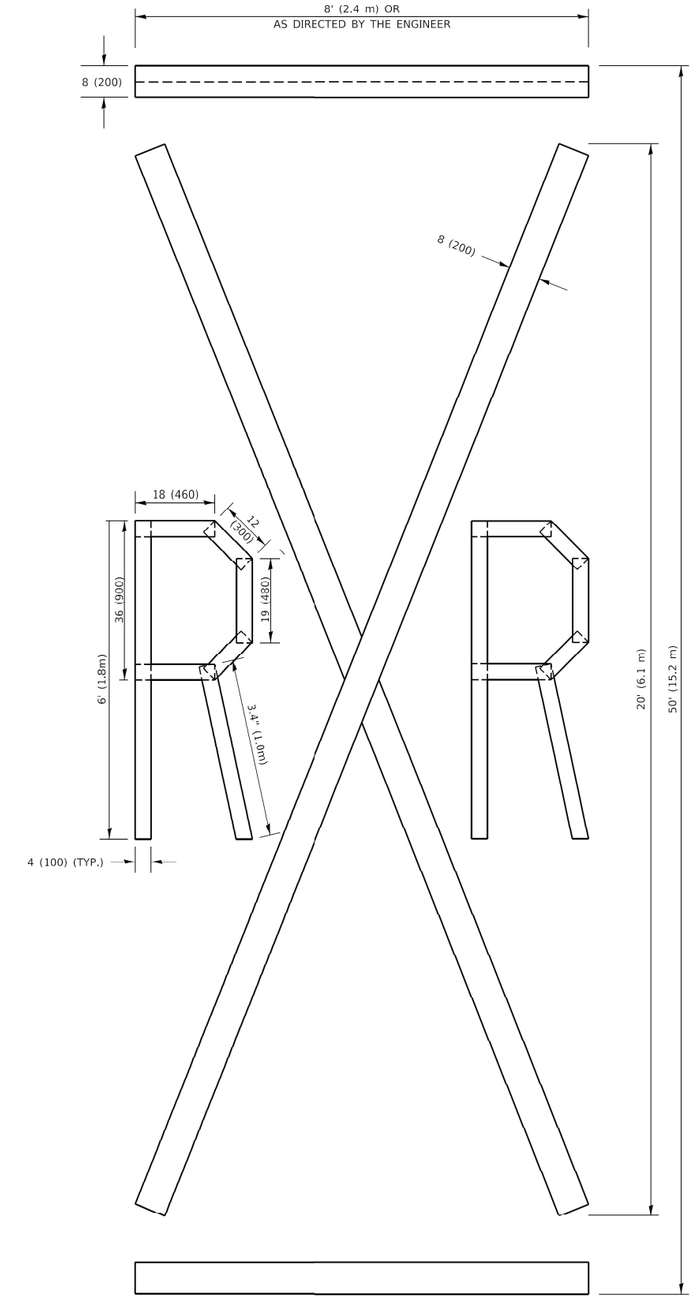

QUANTITY

4 (100) LINE = 225.9 ft. (68.9 m)
75.3 sq. ft. (6.99 sq. m)

All dimensions are in inches (millimeters) unless otherwise shown.

MODEL: Default
FILE NAME: pw:\\IL084EIBDINTEG.illinois.gov:PWIDOTDocuments\IDOT Offices\District 1\Projects\Dist1Std22x34\CADData\CADSheets\tc16.dgn

USER NAME = footemj	DESIGNED -	REVISED - T. RAMMACHER 03-02-98	
	DRAWN -	REVISED - E. GOMEZ 08-28-00	
PLOT SCALE = 50.0068 ' / in.	CHECKED -	REVISED - E. GOMEZ 08-28-00	
PLOT DATE = 3/4/2019	DATE - 09-18-94	REVISED - A. SCHUETZE 09-15-16	

STATE OF ILLINOIS
DEPARTMENT OF TRANSPORTATION

SHORT TERM PAVEMENT MARKING LETTERS AND SYMBOLS

SCALE: NONE | SHEET 1 OF 1 SHEETS | STA. | TO STA.

F.A.I RTE.	SECTION	COUNTY	TOTAL SHEETS	SHEET NO.
290	2019-192-B-R	COOK	237	221
	TC-16	CONTRACT NO. 62K65		
	ILLINOIS FED. AID PROJECT			

tc16.dgn 3/4/2019 10:37:35 AM User=footemj

PARTIAL RAMP CLOSURE DETAILS

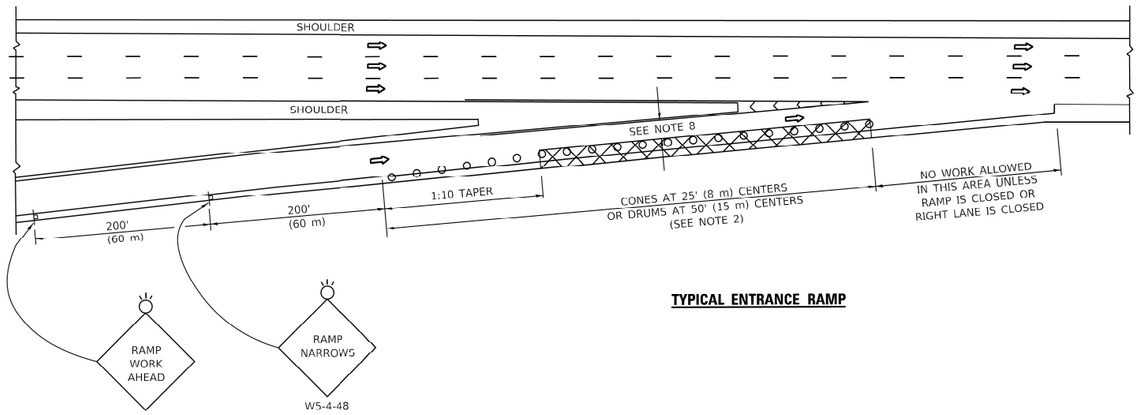

TYPICAL ENTRANCE RAMP

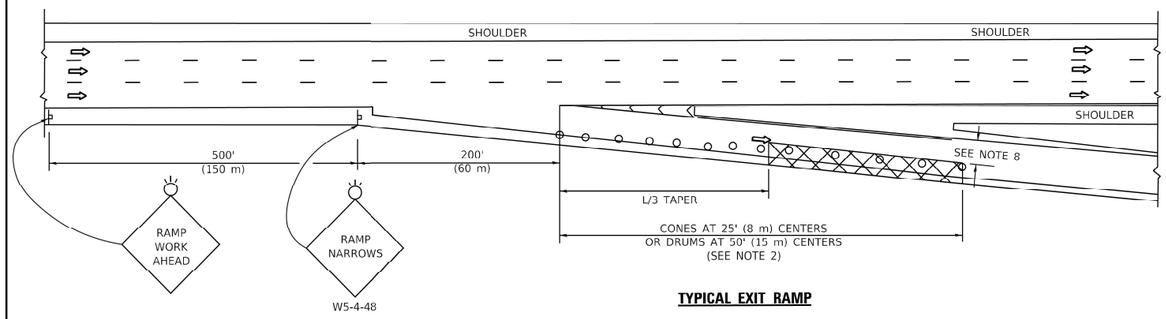

TYPICAL EXIT RAMP

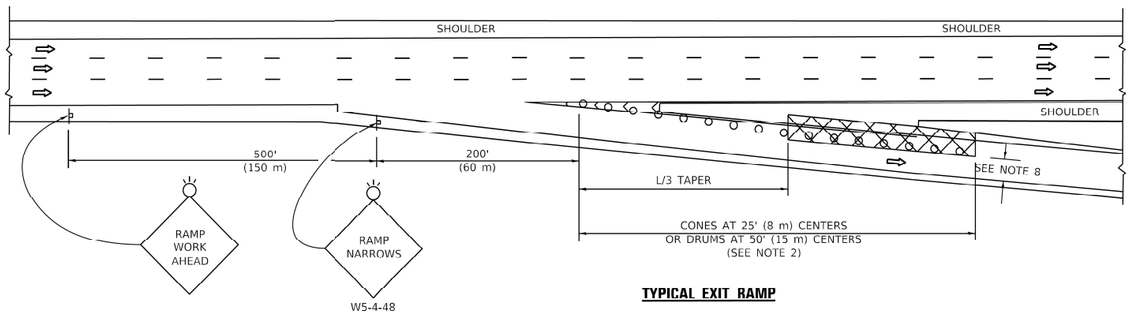

TYPICAL EXIT RAMP

SHOULDER CLOSURE DETAILS

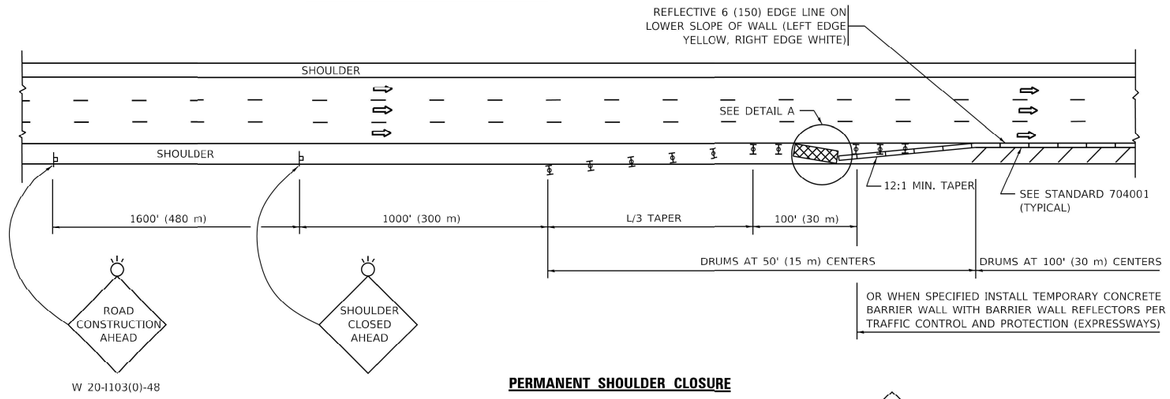

PERMANENT SHOULDER CLOSURE

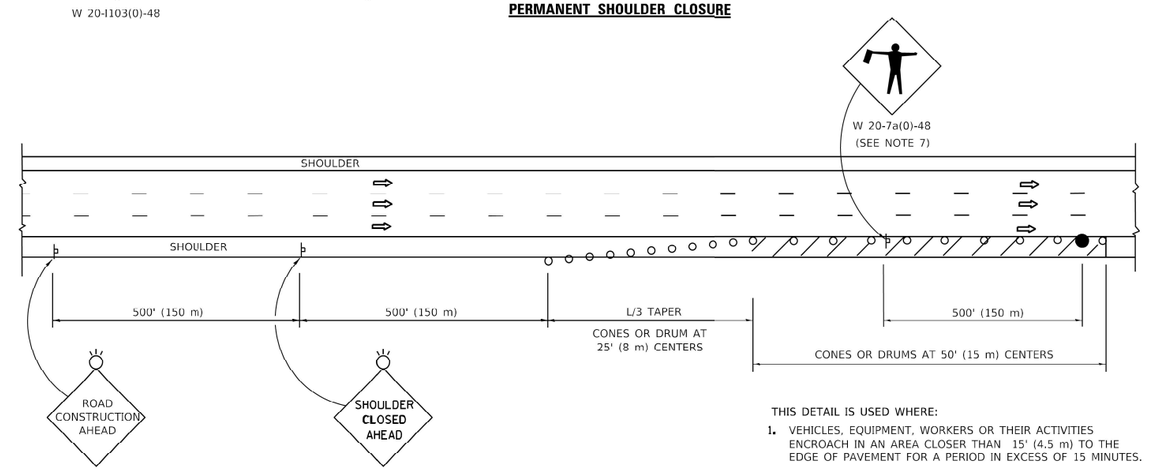

TEMPORARY SHOULDER CLOSURE

THIS DETAIL IS USED WHERE:

1. VEHICLES, EQUIPMENT, WORKERS OR THEIR ACTIVITIES ENCROACH IN AN AREA CLOSER THAN 15' (4.5 m) TO THE EDGE OF PAVEMENT FOR A PERIOD IN EXCESS OF 15 MINUTES.

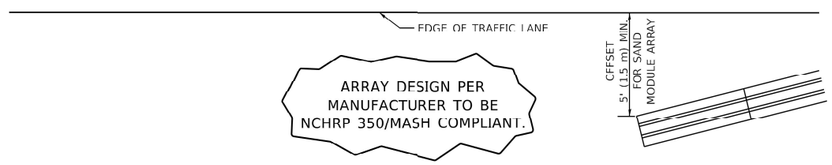

DETAIL "A"
IMPACT ATTENTUATOR, TEMPORARY
(SEE NOTE 5)

SYMBOLS

- ACTIVE WORK AREA
- SIGN ON PORTABLE OR PERMANENT SUPPORT
- FLAGGER WITH CONTROL SIGN
- TYPE II BARRICADE OR DRUM
- CONE, DRUM OR BARRICADE
- IMPACT ATTENUATOR OF TYPE AND TEST LEVEL SPECIFIED

GENERAL NOTES:

1. THE "L" DISTANCE EQUALS:

SPEED LIMIT	FORMULAS	
45 mph (80 km/h) OR GREATER:	METRIC	ENGLISH
	L=0.65(W)(S)	L=(W)(S)

W = WIDTH OF OFFSET IN FEET (METERS)
S = NORMAL POSTED SPEED MPH (KM/H)

2. TYPE II BARRICADES OR DRUMS ARE REQUIRED FOR ALL NIGHTTIME CLOSURES. TYPE II BARRICADES OR DRUMS WITH MONODIRECTIONAL STEADY BURN LIGHTS ARE REQUIRED FOR DELINEATING OBSTICLES, EXCAVATIONS, OR HAZARDS EXCEEDING 100 FT (30m) IN LENGTH AT NIGHT.
3. ALL SIGNS SHALL BE POST MOUNTED IF THE CLOSURE TIME EXCEEDS FOUR DAYS.
4. FLASHING LIGHTS SHALL BE USED DURING THE HOURS OF DARKNESS AND SHALL BE INSTALLED ABOVE THE FIRST TWO SETS OF SIGNS.
5. THE IMPACT ATTENTUATOR, TEMPORARY IS NOT REQUIRED WHEN THE TEMPORARY CONCRETE BARRIER WALL IS PROTECTED BY OR IS TIED INTO THE EXISTING GUARDRAIL. IF OFFSET IS LESS THAN 5 FEET USE NARROW USE TYPE DEVICE TO MEET NCHRP350/MASH.
6. AUTHORIZATION FROM THE DISTRICT'S BUREAU OF TRAFFIC IS REQUIRED FOR ALL FREEWAY CLOSURES.
7. THE FLAGGER AND FLAGGER SIGN ARE REQUIRED AT THE ABOVE WORK SITES WHEN:
   a. FOUR OR MORE WORK VEHICLES ENTER THE TRAFFIC LANES IN A ONE HOUR PERIOD.
   b. THE WORK AVTIVITY REQUIRES FREQUENT ENCROACHMENT INTO THE LANE OPEN TO TRAFFIC.

   THE FLAGGER SHALL BE STATIONED APPROXIMATELY 100' (30 m) TO 200' (60 m) IN ADVANCE OF THE WORKERS.
8. 12' MIN. WIDTH TANGENT SECTION
   16' MIN. WIDTH CURVE SECTION.
9. TEMPORARY SHOULDER AND NON-SYSTEM INTERCHANGE PARTIAL RAMP CLOSURES ARE ALLOWED WEEKDAYS BETWEEN 9:00 A.M. AND 3:00 P.M. AND BETWEEN 7:00 P.M. AND 5:00 A.M. OR AS APPROVED BY THE EXPRESSWAY TRAFFIC OPERATIONS ENGINEER. PERMANENT SHOULDER AND PARTIAL RAMP CLOSURES WILL ONLY BE PERMITTED IF CALLED FOR IN THE PLANS OR AS APPROVED BY THE EXPRESSWAY OPERATIONS ENGINEER.

ALL DIMENSIONS ARE IN INCHES (MILLIMETERS) UNLESS OTHERWISE SHOWN.

MODEL: Default
FILE NAME: pw:\\dot-pw.bentley.com:PWDOT\Documents\DOT Offices\District 1\Projects\DistStd22x34\CADData\CADsheetstc17.dgn

USER NAME = Lawrence.DeManche	DESIGNED -	REVISED - M.D. 06-13	**STATE OF ILLINOIS**	**TRAFFIC CONTROL DETAILS FOR FREEWAY**	
	DRAWN - D.W.S.	REVISED - M.D. 01-18	**DEPARTMENT OF TRANSPORTATION**	**SHOULDER CLOSURES AND PARTIAL RAMP CLOSURES**	
PLOT SCALE = 100.0000 ' / in.	CHECKED -	REVISED - M.D. 10-20		SCALE: NONE / SHEET 1 OF 1 SHEETS / STA. TO STA.	
PLOT DATE = 5/3/2024	DATE - 11-96	REVISED - D.S. 05-24			

F.A.I RTE.	SECTION	COUNTY	TOTAL SHEETS	SHEET NO.
290	2019-192-B-R	COOK	237	222
	TC-17	CONTRACT NO. 62K65		
		ILLINOIS / FED. AID PROJECT		

SIGNING FOR FLAGGING OPERATIONS AT WORK ZONE OPENINGS

WORK ZONE EXIT OPENING

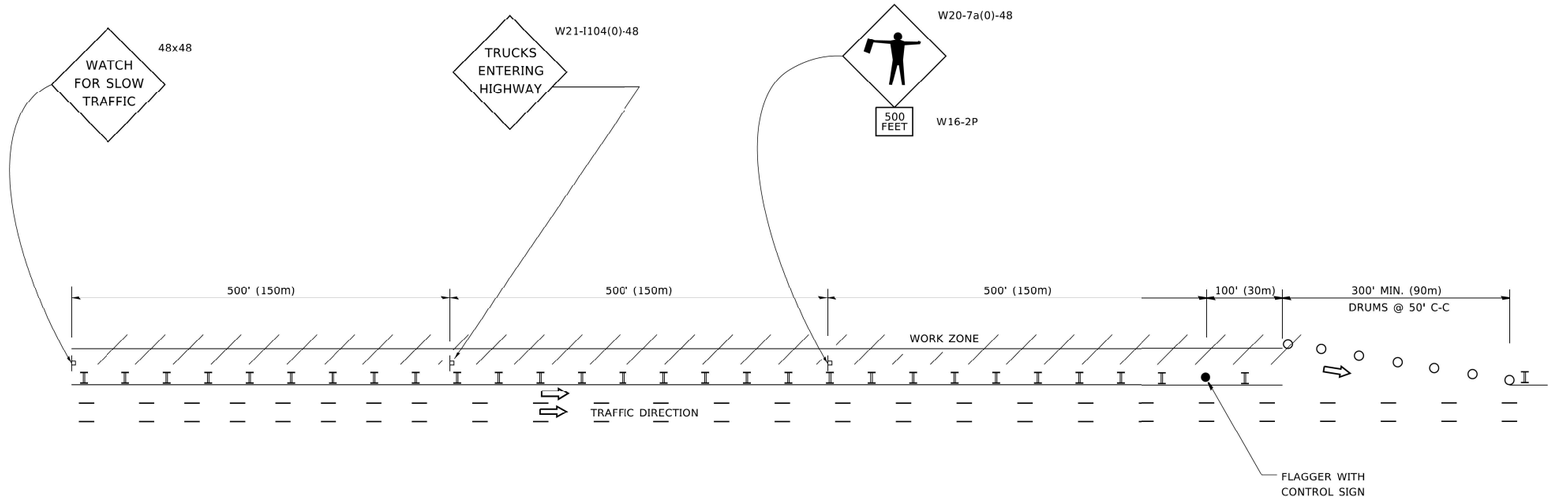

WORK ZONE ENTRY OPENING

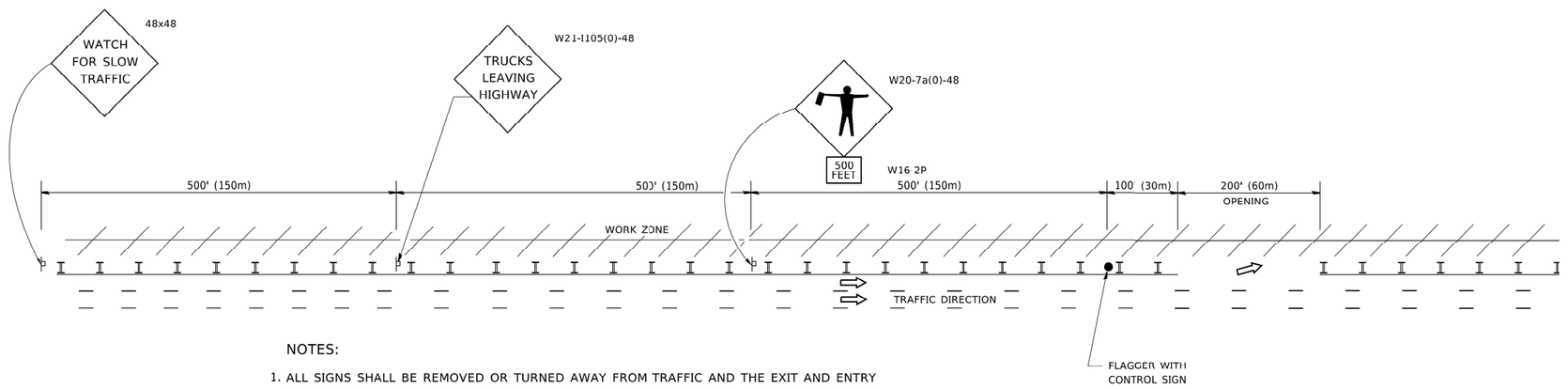

NOTES:

1. ALL SIGNS SHALL BE REMOVED OR TURNED AWAY FROM TRAFFIC AND THE EXIT AND ENTRY OPENINGS SHALL BE CLOSED WHEN THE FLAGGING OPERATION CEASES. NON OPERATING EQUIPMENT SHALL COMPLY WITH ARTICLE 701.11

2. WORK ZONE OPENINGS SHALL BE A MINIMUM OF ONE HALF MILE APART AND A MINIMUM OF ONE QUARTER MILE FROM ALL ENTRANCE AND EXIT RAMPS.

3. EXITING THE WORK ZONE AT ANY PLACE OTHER THAN AT A WORK ZONE EXIT OPENING WILL BE PROHIBITED.

4. ALL VEHICLES SHALL ENTER THE WORK ZONE AT ENTRY OPENINGS, USING THEIR TURN SIGNALS TO WARN MOTORISTS

5. FLAGGERS SHALL NOT STOP TRAFFIC OR DIRECT TRAFFIC INTO AN ADJACENT LANE.

ALL DIMENSIONS ARE IN INCHES (MILLIMETERS) UNLESS OTHERWISE SHOWN

USER NAME = footemj	DESIGNED -	REVISED - J.A.F. 02-06	**STATE OF ILLINOIS DEPARTMENT OF TRANSPORTATION**
	DRAWN -	REVISED - S.P.B. 01-07	
PLOT SCALE = 50.0000 ' / in.	CHECKED -	REVISED - S.P.B. 12-09	
PLOT DATE = 3/4/2019	DATE -	REVISED - M.D.06-13	

FREEWAY /EXPRESSWAY SIGNING FOR FLAGGING OPERATIONS AT WORK ZONE OPENINGS ON FREEWAYS /EXPRESSWAYS

SCALE: NONE | SHEET 1 OF 1 SHEETS | STA. | TO STA.

F.A.I RTE.	SECTION	COUNTY	TOTAL SHEETS	SHEET NO.
290	2019-192-B-R	COOK	237	223
	TC–18	CONTRACT NO. 62K65		
	ILLINOIS FED. AID PROJECT			

MODEL: Default
FILE NAME: pw:\\IL084EBI01NTEG.illinois.gov:PWIDOT\Documents\IDOT Offices\District 1\Projects\Dist\Std2x3\CADData\CADs-sheets\tc18.dgn

tc18.dgn 3/4/2019 10:44:51 AM User=footemj

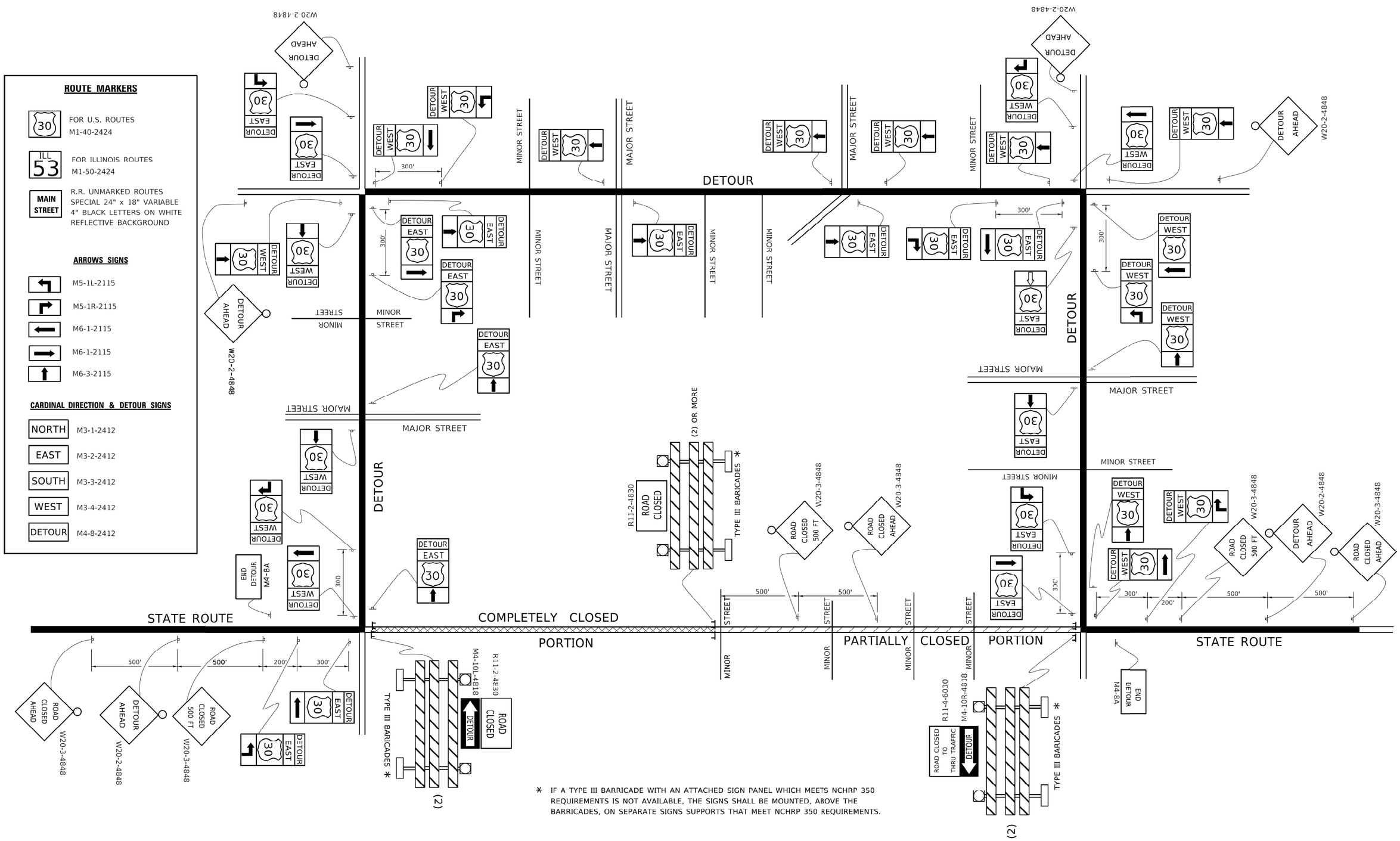

* IF A TYPE III BARRICADE WITH AN ATTACHED SIGN PANEL WHICH MEETS NCHRP 350 REQUIREMENTS IS NOT AVAILABLE, THE SIGNS SHALL BE MOUNTED, ABOVE THE BARRICADES, ON SEPARATE SIGNS SUPPORTS THAT MEET NCHRP 350 REQUIREMENTS.

MODEL: Default
FILE NAME: pw:\\IL084EBIDINTEG.illinois.gov:PWIDOT\Documents\IDOT Offices\District 1\Projects\DistStd2x34\CADData\CADsheets\tc21.dgn

USER NAME = footemj	DESIGNED -	REVISED - 10-18-02	STATE OF ILLINOIS DEPARTMENT OF TRANSPORTATION
	DRAWN -	REVISED - R. BORO 09-14-09	
PLOT SCALE = 50.0000 ' / in.	CHECKED -	REVISED -	
PLOT DATE = 3/4/2019	DATE -	REVISED -	

DETOUR SIGNING FOR CLOSING STATE HIGHWAYS

SCALE: NONE | SHEET 1 OF 1 SHEETS | STA. TO STA.

F.A.I RTE.	SECTION	COUNTY	TOTAL SHEETS	SHEET NO.
290	2019-192-B-R	COOK	237	224
	TC-21	CONTRACT NO. 62K65		
		ILLINOIS FED. AID PROJECT		

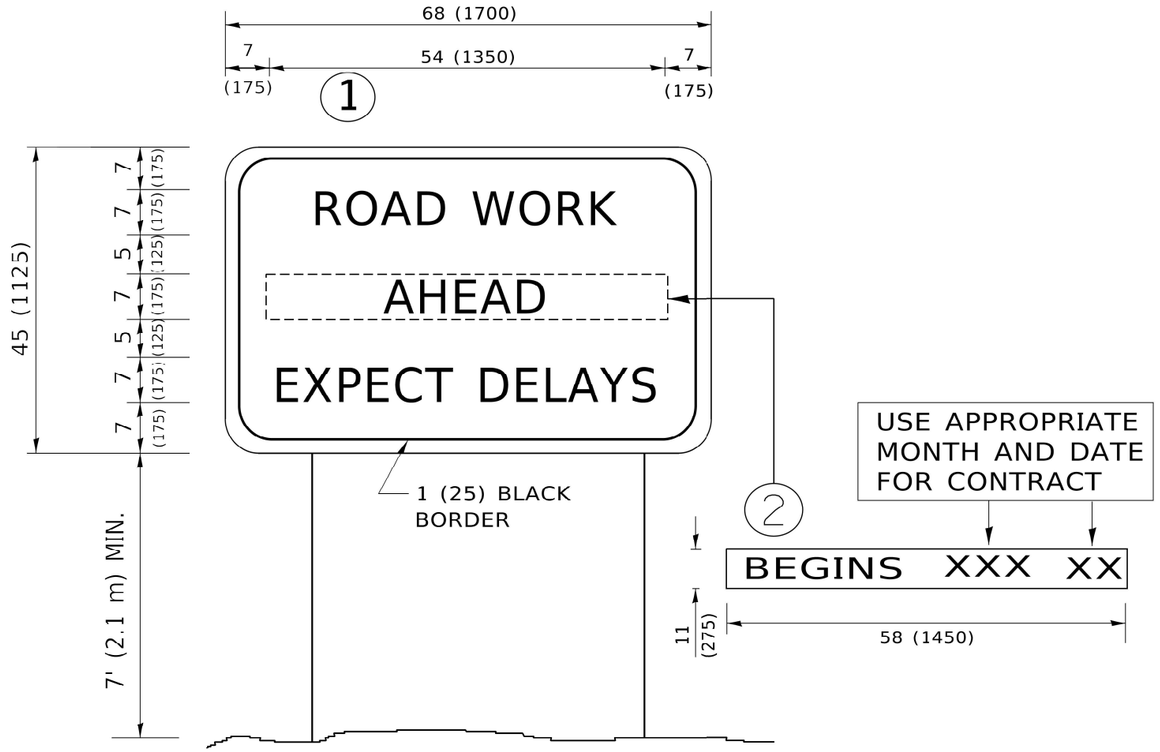

NOTES:

1. USE BLACK LETTERING ON ORANGE BACKGROUND.
2. ERECT SIGNS IN ADVANCE OF THE LOCATION FOR THE "ROAD CONSTRUCTION AHEAD" SIGN AT LOCATIONS AS DIRECTED BY THE ENGINEER.
3. ERECT SIGN (1) WITH INSTALLED PANEL (2) ONE WEEK PRIOR TO THE START OF CONSTRUCTION.
4. REMOVE PANEL (2) SOON AFTER THE START OF CONSTRUCTION.
5. SEE SPECIAL PROVISION FOR "TEMPORARY INFORMATION SIGNING" FOR ADDITIONAL INFORMATION.
6. ONE SIGN ASSEMBLY EQUALS 25.70 SQ. FT. (2.3 SQ. M.)
7. SHALL BE PAID FOR AS TEMPORARY INFORMATION SIGNING.

ALL DIMENSIONS ARE IN INCHES (MILLIMETERS) UNLESS OTHERWISE SHOWN.

MODEL: Default
FILE NAME: pw:\\IL084EBIDINTEG.illinois.gov:PWIDOTDocuments\IDOT Offices\District 1\Projects\Dist51022x34\CADData\CADSsheets\tc22.dgn

USER NAME = footemj	DESIGNED -	REVISED - R. MIRS 09-15-97	
	DRAWN -	REVISED - R. MIRS 12-11-97	
PLOT SCALE = 50.0000 ' / in.	CHECKED -	REVISED - T. RAMMACHER 02-02-99	
PLOT DATE = 3/4/2019	DATE -	REVISED - C. JUCIUS 01-31-07	

STATE OF ILLINOIS
DEPARTMENT OF TRANSPORTATION

ARTERIAL ROAD INFORMATION SIGN

SCALE: NONE | SHEET 1 OF 1 SHEETS | STA. | TO STA.

F.A.I RTE.	SECTION	COUNTY	TOTAL SHEETS	SHEET NO.
290	2019-192-B-R	COOK	237	225
	TC–22	CONTRACT NO. 62K65		
	ILLINOIS FED. AID PROJECT			

tc22.dgn 3/4/2019 10:48:10 AM User=footemj

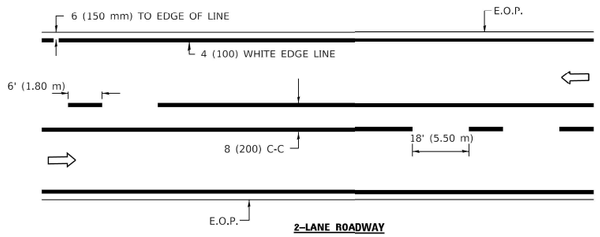

2–LANE ROADWAY

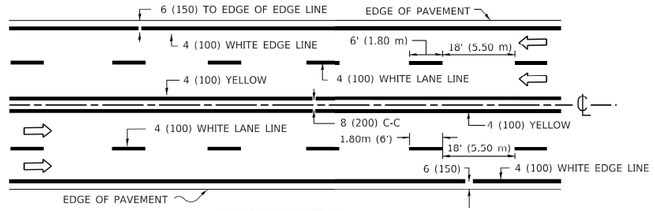

MULTI–LANE UNDIVIDED

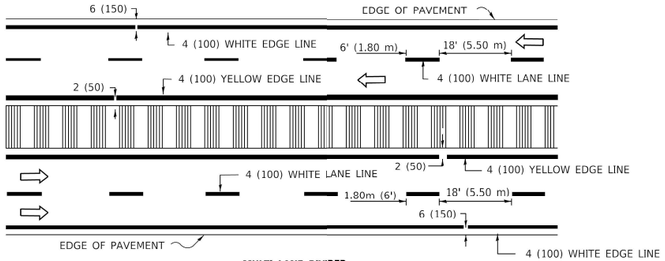

MULTI–LANE DIVIDED

WITH MOUNTABLE MEDIAN

NOTE: MEDIANS WITH BARRIER CURB DO NOT REQUIRE AN EDGE LINE

TYPICAL LANE AND EDGE LINE MARKING

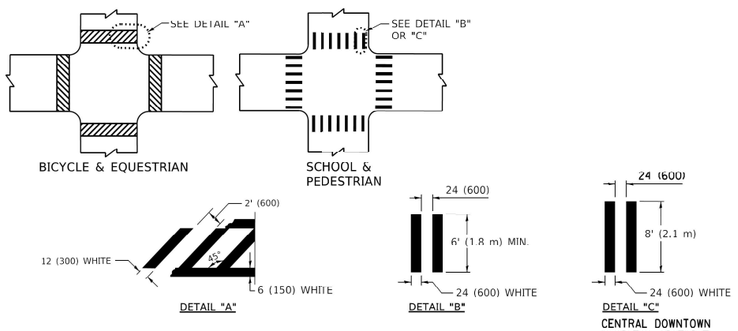

TYPICAL CROSSWALK MARKING

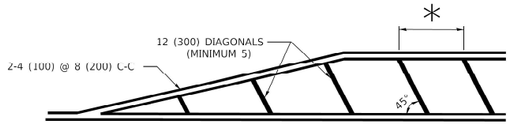

* FOR MEDIAN LENGTHS WHERE DIAGONAL SPACING CANNOT BE ATTAINED, USE 5 (FIVE) EQUALLY SPACED DIAGONAL LINES.

* DIAGONAL LINE SPACING: 20' (6.1 m) C-C

PAINTED MEDIANS

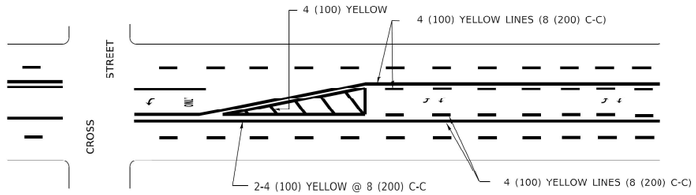

A MINIMUM OF TWO PAIRS OF TURN ARROWS SHALL BE USED, WHITE IN COLOR. ADDITIONAL PAIRS SHALL BE PLACED AT 200' (60 m) TO 300' (90 m) INTERVALS.

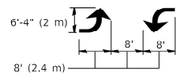

MEDIAN WITH TWO–WAY LEFT TURN LANE

TYPICAL PAINTED MEDIAN MARKING

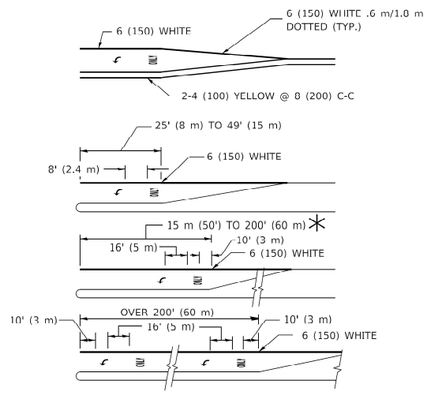

FULL SIZE LETTERS 8' (2.4 m) AND ARROWS SHALL BE USED.
↰ AREA = 15.8 SQ. FT. (1.47 m²) ONLY AREA = 22.9 SQ. FT. (2.13 m²)

* TURN LANES IN EXCESS OF 400' (120 m) IN LENGTH MAY HAVE AN ADDITIONAL SET OF ARROW - "ONLY" INSTALLED MIDWAY BETWEEN THE OTHER TWO SETS OF ARROW - "ONLY".

TYPICAL LEFT (OR RIGHT) TURN LANE

TYPICAL TURN LANE MARKING

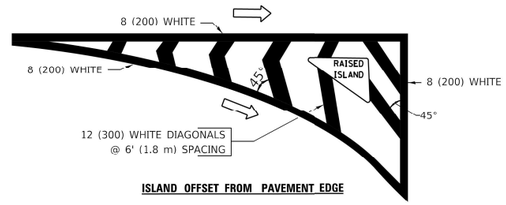

ISLAND OFFSET FROM PAVEMENT EDGE

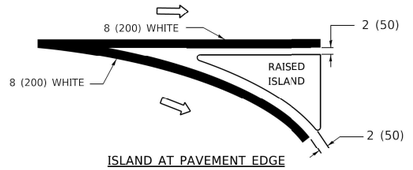

ISLAND AT PAVEMENT EDGE

TYPICAL ISLAND MARKING

TYPE OF MARKING	WIDTH OF LINE	PATTERN	COLOR	SPACING / REMARKS
CENTERLINE ON 2 LANE PAVEMENT	4 (100)	SKIP-DASH	YELLOW	6' (1.80 m) LINE WITH 18' (5.50 m) SPACE
CENTERLINE ON MULTI-LANE UNDIVIDED PAVEMENT	2 @ 4 (100)	SOLID	YELLOW	8 (200) C-C
NO PASSING ZONE LINES: FOR ONE DIRECTION FOR BOTH DIRECTIONS	4 (100) 2 @ 4 (100)	SOLID SOLID	YELLOW YELLOW	8 (200) C-C
LANE LINES	4 (100) 5 (125) ON FREEWAYS	SKIP-DASH SKIP-DASH	WHITE WHITE	6' (1.80 m) LINE WITH 18' (5.50 m) SPACE
DOTTED LINES (EXTENSIONS OF CENTER, LANE OR TURN LANE MARKINGS)	SAME AS LINE BEING EXTENDED	SKIP-DASH	SAME AS LINE BEING EXTENDED	2' (600) LINE WITH 6' (1.8) SPACE
EDGE LINES	4 (100)	SOLID	YELLOW-LEFT WHITE-RIGHT	OUTLINE MOUNTABLE MEDIANS IN YELLOW; EDGE LINES ARE NOT USED NEXT TO BARRIER CURB
TURN LANE MARKINGS	6 (150) LINE; FULL SIZE LETTERS & SYMBOLS (8' (2.4 m))	SOLID	WHITE	SEE TYPICAL TURN LANE MARKING DETAIL
TWO WAY LEFT TURN MARKING	2 @ 4 (100) EACH DIRECTION 8' (2.4 m) LEFT ARROW	SKIP-DASH AND SOLID IN PAIRS	YELLOW WHITE	6' (1.8 m) LINE WITH 18' (5.50 m) SPACE FOR SKIP-DASH; 8 (200) C-C BETWEEN SOLID LINE AND SKIP-DASH LINE SEE TYPICAL TWO-WAY LEFT TURN MARKING DETAIL
CROSSWALK LINES A. DIAGONALS (BIKE & EQUESTRIAN) B. LONGITUDINAL BARS (SCHOOL & PEDESTRIAN)	12 (300) @ 45° 24 (600) @ 90°	SOLID SOLID	WHITE WHITE	2' (600) APART 2' (600) APART SEE TYPICAL CROSSWALK MARKING DETAILS.
STOP LINES	24 (600)	SOLID	WHITE	PLACE 4' (1.2 m) IN ADVANCE OF AND PARALLEL TO CROSSWALK, IF PRESENT. OTHERWISE, PLACE AT DESIRED STOPPING POINT. PARALLEL TO CROSSROAD CENTERLINE, WHERE POSSIBLE
PAINTED MEDIANS	2 @ 4 (100) WITH 12 (300) DIAGONALS @ 45°	SOLID	YELLOW: TWO WAY TRAFFIC WHITE: ONE WAY TRAFFIC	8 (200) C-C FOR THE DOUBLE LINE SEE TYPICAL PAINTED MEDIAN MARKING.
GORE MARKING AND CHANNELIZING LINES	8 (200) WITH 12 (300) DIAGONALS @ 45°	SOLID	WHITE	DIAGONALS: 20' (6.1 m) (LESS THAN 30 MPH (50 km/h))
RAILROAD CROSSING	24 (600) TRANSVERSE LINES; "RR" IS 6' (1.8 m) LETTERS; 16 (400) LINE FOR "X"	SOLID	WHITE	SEE STATE STANDARD 780001 AREA OF: "R"=3.6 SQ. FT. (0.33m²) EACH "X"=54.0 SQ. FT. (5.0 m²)

FOR FURTHER DETAILS ON PAVEMENT MARKING REFER TO STREET MARKING STANDARDS, PRINTED BY CITY OF CHICAGO, DEPARTMENT OF TRANSPORTATION, BUREAU OF TRAFFIC.

ALL DIMENSIONS ARE IN INCHES (MILLIMETERS) UNLESS OTHERWISE SHOWN.

MODEL: Default
FILE NAME: pw:\\IL084EBI0INTEG.illinois.gov:PWIDOT\Documents\IDOT Offices\District 1\Projects\Dist1d22x34\CADData\CADs-sheets\tc24-.dgn

USER NAME = footemj	DESIGNED -	REVISED -T. RAMMACHER 12-07-00	
	DRAWN -	REVISED - K. ENG 02-28-12	
PLOT SCALE = 50.0000 ' / in.	CHECKED -	REVISED -	
PLOT DATE = 3/4/2019	DATE -	REVISED -	

STATE OF ILLINOIS
DEPARTMENT OF TRANSPORTATION

CITY OF CHICAGO
TYPICAL PAVEMENT MARKINGS

SCALE: NONE | SHEET 1 OF 3 SHEETS | STA. | TO STA.

F.A.I RTE.	SECTION	COUNTY	TOTAL SHEETS	SHEET NO.
290	2019-192-B-R	COOK	237	226
	TC–24	CONTRACT NO. 62K65		
		ILLINOIS	FED. AID PROJECT	

tc24.dgn 3/4/2019 10:54:53 AM User=footemj

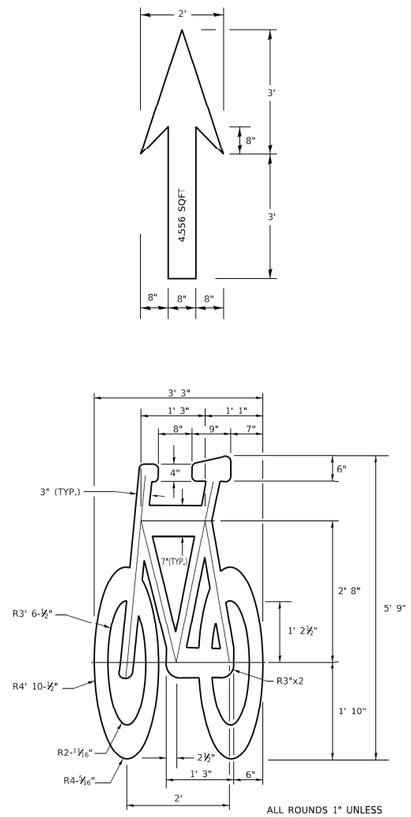

ALL ROUNDS 1" UNLESS OTHERWISE NOTED.

BICYCLE LANE SYMBOL

NOTE:

1. FOR BIKE LANE SYMBOLS ONLY, USE PRE-FORMED THERMOPLASTIC WITH A MINIMUM THICKNESS OF 90 MILS, MINIMUM SKID RESISTANCE VALUE OF 60 BPN, & A MINIMUM INDEX OF REFRACTION OF 1.50.
2. THE RESIDENT ENGINEER SHALL CONTACT MR. BEN GOMBERG AT 312-744-8093 AT LEAST ONE CALENDAR WEEK PRIOR TO INSTALLING BIKE LANE SYMBOLS.

TYPICAL BIKE LANE SYMBOLS
DRAWING #28

DRAWING #29

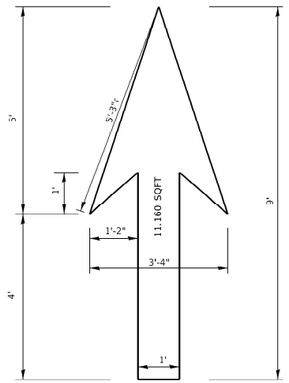

DRAWING #30

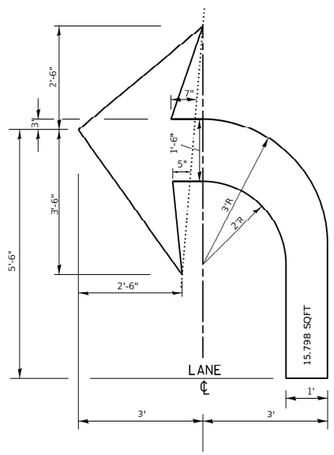

DRAWING #31

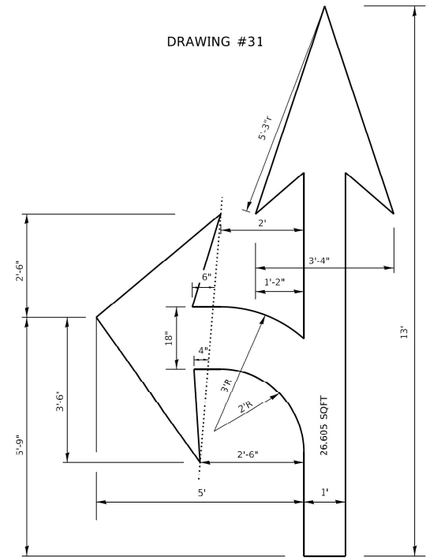

DRAWING #32

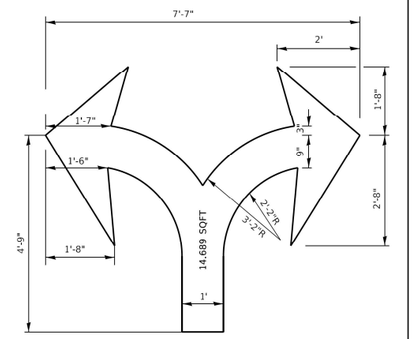

DRAWING #33

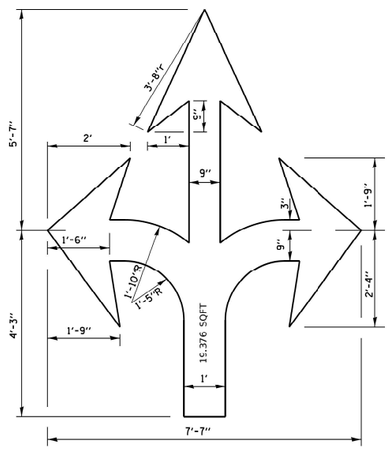

DRAWING #34

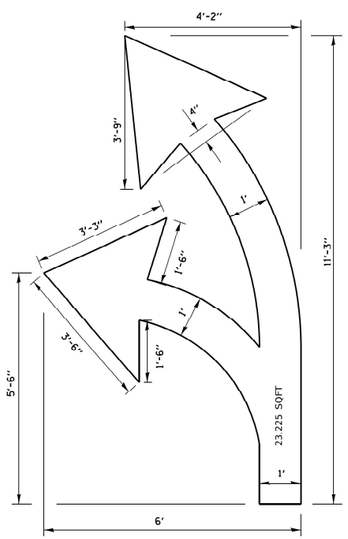

DRAWING #35

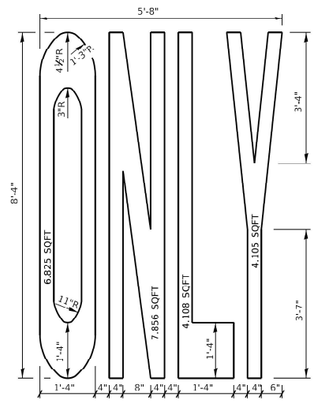

NOTE:

ALL MARKINGS SHALL BE SOLID WHITE UNLESS OTHERWISE NOTED IN THE PLANS

MODEL: Default
FILE NAME: pw:\\IL084EBIDINTEG.illinois.gov:PWIDOT\Documents\IDOT Offices\District 1\Projects\DistStd2x34\CADData\CADsheets\tc24.dgn

USER NAME = footemj	DESIGNED -	REVISED - T. RAMMACHER 12-07-00	STATE OF ILLINOIS DEPARTMENT OF TRANSPORTATION
	DRAWN -	REVISED -	
PLOT SCALE = 50.0000 ' / in.	CHECKED -	REVISED -	
PLOT DATE = 3/4/2019	DATE -	REVISED -	

CITY OF CHICAGO
TYPICAL PAVEMENT MARKINGS

SCALE: NONE | SHEET 2 OF 3 SHEETS | STA. TO STA.

F.A.I RTE.	SECTION	COUNTY	TOTAL SHEETS	SHEET NO.
290	2019-192-B-R	COOK	237	227
	TC-24	CONTRACT NO. 62K65		
		ILLINOIS	FED. AID PROJECT	

tc24.dgn 3/4/2019 10:55:28 AM User=footemj

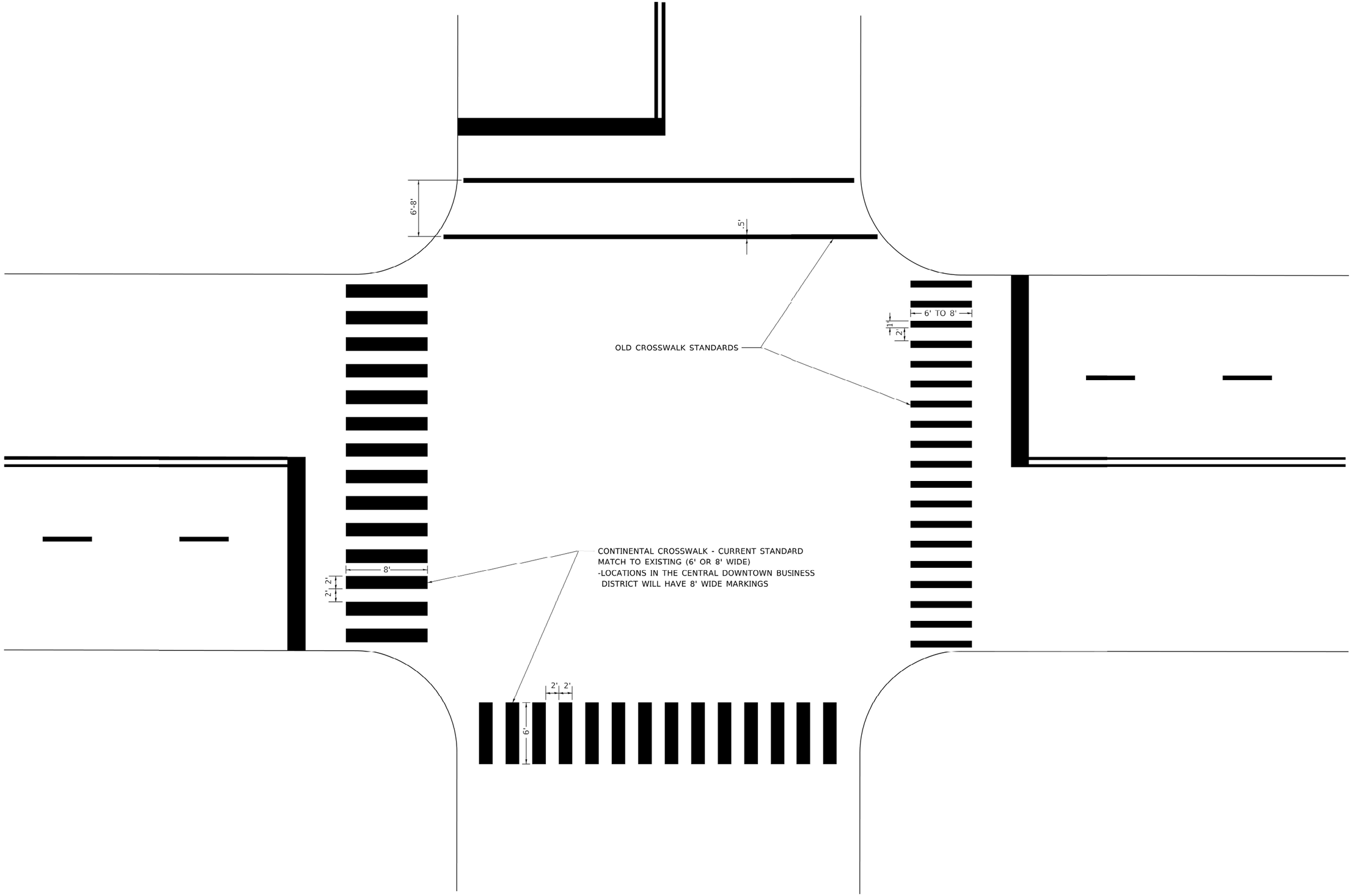

MODEL: Default
FILE NAME: pw:\\IL084EBIDINTEG.illinois.gov:PWIDOT\Documents\IDOT Offices\District 1\Projects\DistStd2x34\CADData\CADsheets\tc24.dgn

USER NAME = footemj	DESIGNED -	REVISED - T. RAMMACHER 12-07-00	STATE OF ILLINOIS DEPARTMENT OF TRANSPORTATION
	DRAWN -	REVISED -	
PLOT SCALE = 50.0000 ' / in.	CHECKED -	REVISED -	
PLOT DATE = 3/4/2019	DATE -	REVISED -	

CITY OF CHICAGO
TYPICAL PAVEMENT MARKINGS

SCALE: NONE | SHEET 3 OF 3 SHEETS | STA. TO STA.

F.A.I RTE.	SECTION	COUNTY	TOTAL SHEETS	SHEET NO.
290	2019-192-B-R	COOK	237	228
	TC-24	CONTRACT NO. 62K65		
		ILLINOIS	FED. AID PROJECT	

tc24.dgn 3/4/2019 10:56:02 AM User=footemj

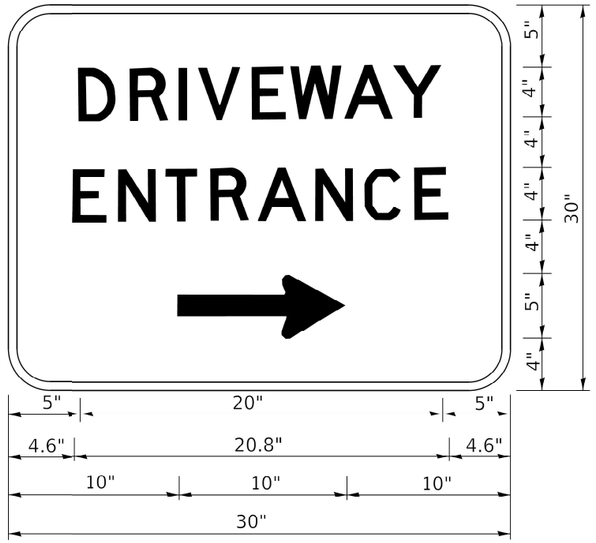

3.0" RADIUS, 0.5" BORDER, WHITE ON GREEN; REFLECTORIZED
"DRIVEWAY" D; "ENTRANCE" D; STANDARD ARROW CUSTOM 12.0" x 5.0"

NOTES:

1. HALF OF THE SIGNS WILL REQUIRE A LEFT HAND FACING ARROW.
2. TWO SIGNS SHALL BE USED AT EACH COMMERCIAL ENTRANCE PLACED BACK-TO-BACK: ONE WITH A RIGHT HAND ARROW (SHOWN) SHALL BE PLACED ON THE NEAR RIGHT SIDE THE DRIVEWAY AND ONE WITH A LEFT HAND ARROW SHALL BE PLACED ON THE FAR LEFT SIDE OF THE DRIVEWAY.
3. SIGNS TO BE PAID FOR AS ITEM "TEMPORARY INFORMATION SIGNING".

MODEL: Default
FILE NAME: pw:\\planroom.dot.illinois.gov:PWIDOT\Documents\IDOT Offices\District 1\Projects\DistStd22x34\CADData\CADSheets\tc26.dgn

USER NAME = leysa	DESIGNED -	REVISED - C. JUCIUS 02-15-07	
	DRAWN -	REVISED -	
PLOT SCALE = 50.0000 ' / in.	CHECKED -	REVISED -	
PLOT DATE = 8/6/2021	DATE -	REVISED -	

STATE OF ILLINOIS
DEPARTMENT OF TRANSPORTATION

DRIVEWAY ENTRANCE SIGNING

SCALE: NONE | SHEET 1 OF 1 SHEETS | STA. | TO STA.

F.A.I RTE.	SECTION	COUNTY	TOTAL SHEETS	SHEET NO.
290	2019-192-B-R	COOK	237	229
	TC-26	CONTRACT NO. 62K65		
	ILLINOIS	FED. AID PROJECT		

tc26.dgn 8/6/2021 8:37:02 AM User:leysa

NOTES:

TYPICAL CROSSWALK CONSISTS OF 24 INCH BARS, WITH THE OUTER EDGE AS A PROJECTION OF 1 FT INSIDE THE PROPERTY LINE AND THE OTHER AS DEFINED BY SIDEWALK WIDTH.

WHERE CROSSWALK LOCATIONS ARE DEFINED BY SPECIFIC CURB RAMP SITUATIONS, THE BELOW TYPICAL LAYOUT MAY NOT APPLY. SEE CURB RAMP LAYOUTS IN APPENDIX B FOR ADDITIONAL CROSSWALK DETAILS.

FOR CROSSWALKS AT INTERSECTIONS WHERE PROPERTY LINES ARE NOT AT 90 DEGREES, ALIGN THE PROPERTY LINES (SEE DASHED LINE BELOW) TO LOCATE INNER CROSSWALK LINE.

SEE SECTION 4.2.9 AND SHEET A-7-1 FOR GUIDELINES REGARDING THE LAYOUT OF CONTINENTAL AND LADDER MARKINGS.

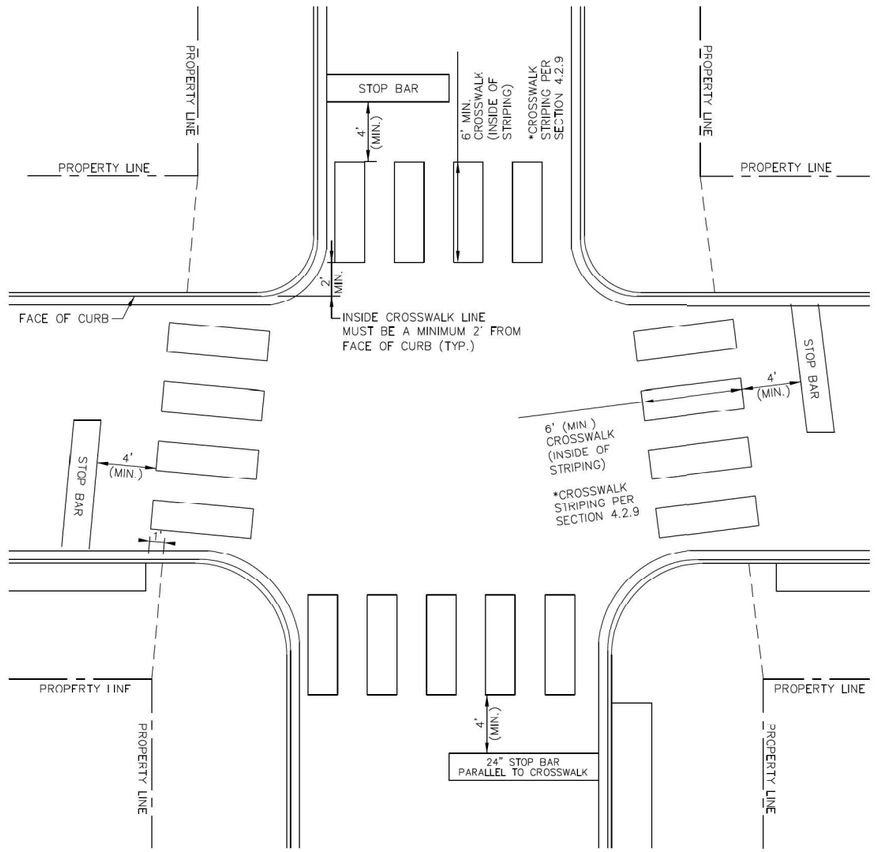

	DATE	REVISION	CITY OF CHICAGO		
CDOT Chicago Department of Transportation	01/01/2014	REVISION 1	INTERSECTION CROSSWALK LAYOUT		
	05/15/2023	REVISION 2			
			DATE	SHEET	DRAWN BY
			01/10/07	A-1-3	CDOT

TYPE BV.12 CURB & GUTTER

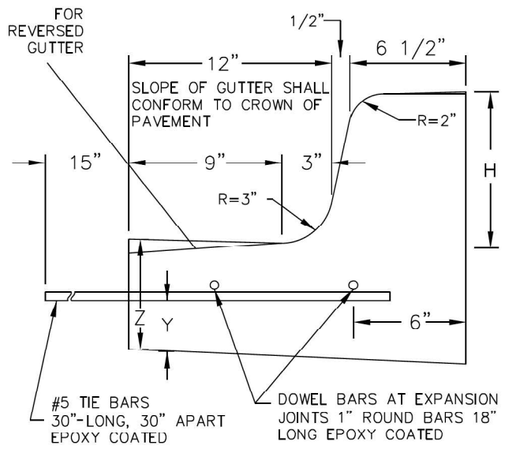

TYPE B BARRIER CURB

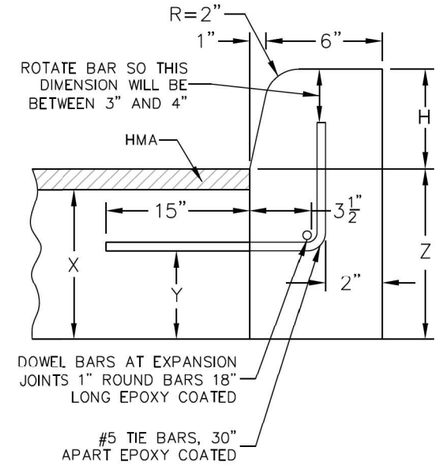

JOINTS IN CONCRETE CURB, COMBINATION CONCRETE CURB & GUTTER

TRANSVERSE JOINTS OF A TYPE SIMILAR TO THAT USED IN THE ADJACENT PAVEMENT SHALL BE INSTALLED IN THE CURB, GUTTER AND COMBINED CURB & GUTTER IN PROLONGATION WITH THE JOINTS IN THE PAVEMENT. THE DETAILS OF THE TRANSVERSE JOINTS IN THE CURB, GUTTER AND COMBINED CURB & GUTTER SHALL BE APPROVED BY THE COMMISSIONER. WHEN CURB, CUTTER OR COMBINED CURB & GUTTER IS CONSTRUCTED ADJACENT TO A FLEXIBLE BASE PAVEMENT, 1" THICK EXPANSION JOINTS COMPOSED OF BITUMINOUS PREFORMED JOINT FILLER SHALL BE INSTALLED IN THE CURB AND/OR GUTTER AT POINTS OF CURVATURE AND AT CONSTRUCTION JOINTS PER A-2-3B. CONTRACTION JOINTS SHALL ALSO BE PLACED BETWEEN THESE EXPANSION JOINTS AT DISTANCES NOT EXCEEDING 20 FEET. ALL TIE BARS SHALL BE DEFORMED. ALL DOWEL BARS SHALL BE SMOOTH.

NOTE:

1. AT LOCATIONS REQUIRING DEPRESSED CURBS SEE THE ADA STANDARDS FOR CONSTRUCTION DETAILS.
2. H = VARIABLE 3" TO 9"
   X = THICKNESS OF PAVEMENT
   Y = ONE HALF THE THICKNESS OF CONCRETE PAVEMENT OR CONCRETE BASE
   Z = 10" OR THICKNESS OF PAVEMENT – WHICHEVER IS GREATER

	DATE	REVISION	CITY OF CHICAGO		
CDOT Chicago Department of Transportation	01/01/2014	REVISION 1	CONCRETE CURB & GUTTER DETAIL		
	05/15/2023	REVISION 2			
			DATE	SHEET	DRAWN BY
			12/12/06	A-2-6	CDOT

MODEL: Default
FILE NAME: P:\104\1441-IDOT - Sacramento and Pulaha over I-290\Work\CADD\Sacramento - Contract 62K65\CADD Sheets\D162K65-ohs-standards-CDOT.dgn

COLLINS ENGINEERS INC

USER NAME = omartinez	DESIGNED -	REVISED -
	DRAWN -	REVISED -
PLOT SCALE = $SCALES	CHECKED -	REVISED -
PLOT DATE = 9/12/2025	DATE -	REVISED -

STATE OF ILLINOIS
DEPARTMENT OF TRANSPORTATION

CHICAGO DEPARTMENT OF TRANSPORTATION
STANDARD DRAWINGS

SCALE: | SHEET OF SHEETS | STA. | TO STA.

F.A.I. RTE.	SECTION	COUNTY	TOTAL SHEETS	SHEET NO.
290	2019-192-B-R	COOK	237	230
		CONTRACT NO. 62K65		
	ILLINOIS	FED. AID PROJECT		

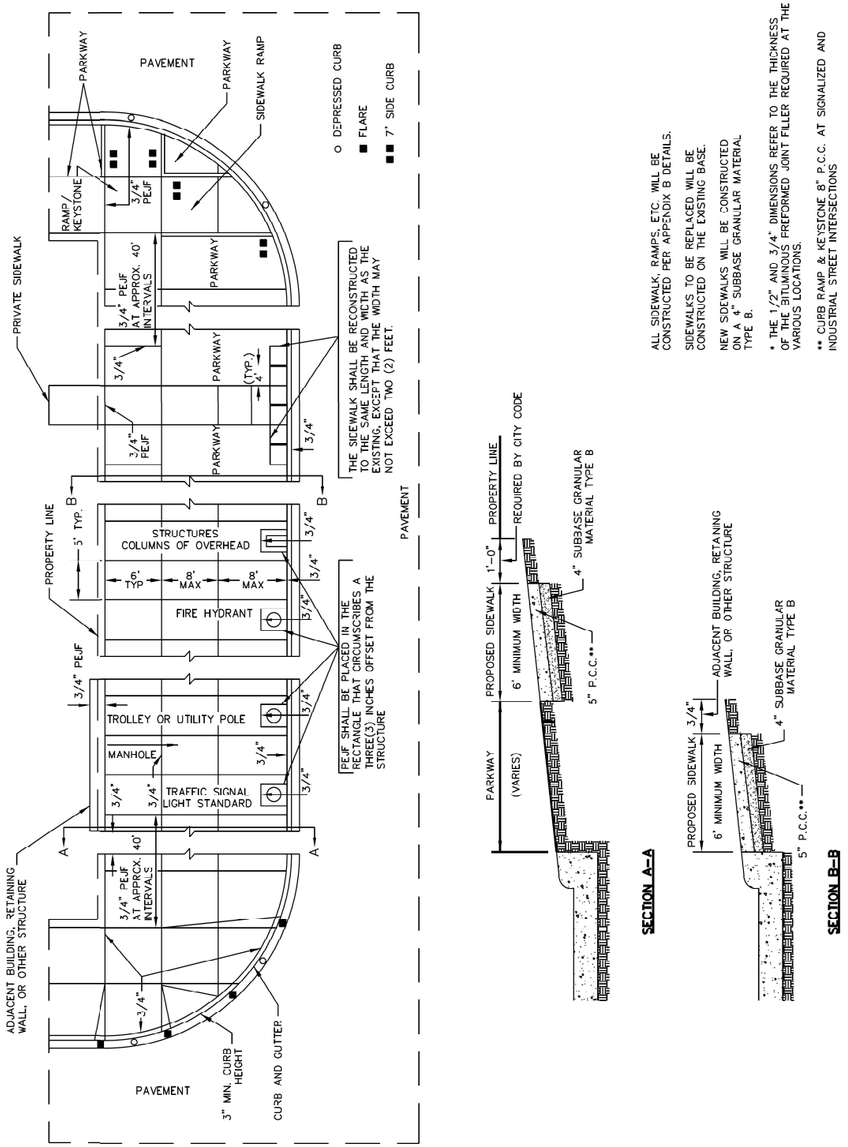

ALL SIDEWALK, RAMPS, ETC. WILL BE CONSTRUCTED PER APPENDIX B DETAILS.

SIDEWALKS TO BE REPLACED WILL BE CONSTRUCTED ON THE EXISTING BASE.

NEW SIDEWALKS WILL BE CONSTRUCTED ON A 4" SUBBASE GRANULAR MATERIAL TYPE B.

* THE 1/2" AND 3/4" DIMENSIONS REFER TO THE THICKNESS OF THE BITUMINOUS PREFORMED JOINT FILLER REQUIRED AT THE VARIOUS LOCATIONS.

** CURB RAMP & KEYSTONE 8" P.C.C. AT SIGNALIZED AND INDUSTRIAL STREET INTERSECTIONS

CDOT Chicago Department of Transportation	DATE	REVISION	CITY OF CHICAGO		
	01/01/2014	REVISION 1	PORTLAND CEMENT CONCRETE SIDEWALK CONSTRUCTION		
	05/15/2023	REVISION 2			
			DATE	SHEET	DRAWN BY
			12/22/06	A-3-1	CDOT

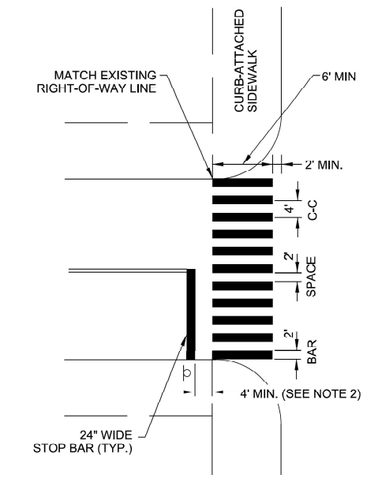

DETAIL A
CONTINENTAL CROSSWALK
CURB-ATTACHED SIDEWALK

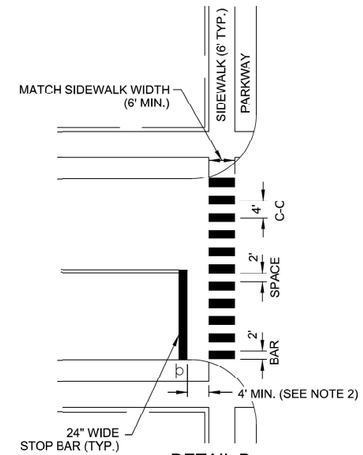

DETAIL B
CONTINENTAL CROSSWALK
SIDEWALK AND PARKWAY

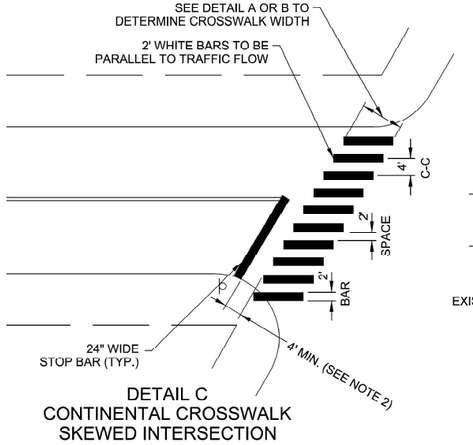

DETAIL C
CONTINENTAL CROSSWALK
SKEWED INTERSECTION

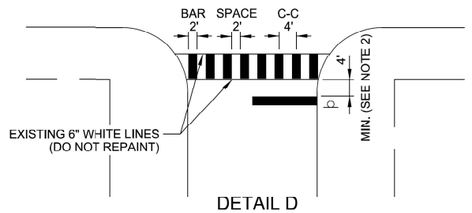

DETAIL D
LADDER CROSSWALK

CDOT Chicago Department of Transportation	DATE	REVISION	CITY OF CHICAGO		
	01/01/2014	REVISION 1	CROSSWALK MARKING DETAIL		
	05/15/2023	REVISION 2			
			DATE	SHEET	DRAWN BY
			06/25/12	A-7-1A	CDOT

MODEL: Default
FILE NAME: P:\DOT\14411-IDOT - Sacramento and Pulaski over I-290\Work\CADD\Sacramento - Contract 62K65\CADD Sheets\D162K65-4thstandards-CDOT.dgn

COLLINS ENGINEERS INC

USER NAME = omartinez	DESIGNED -	REVISED -
	DRAWN -	REVISED -
PLOT SCALE = $SCALES	CHECKED -	REVISED -
PLOT DATE = 9/12/2025	DATE -	REVISED -

STATE OF ILLINOIS
DEPARTMENT OF TRANSPORTATION

CHICAGO DEPARTMENT OF TRANSPORTATION
STANDARD DRAWINGS

SCALE: | SHEET OF SHEETS | STA. | TO STA.

F.A.I. RTE.	SECTION	COUNTY	TOTAL SHEETS	SHEET NO.
290	2019-192-B-R	COOK	237	231
		CONTRACT NO. 62K65		
	ILLINOIS FED. AID PROJECT			

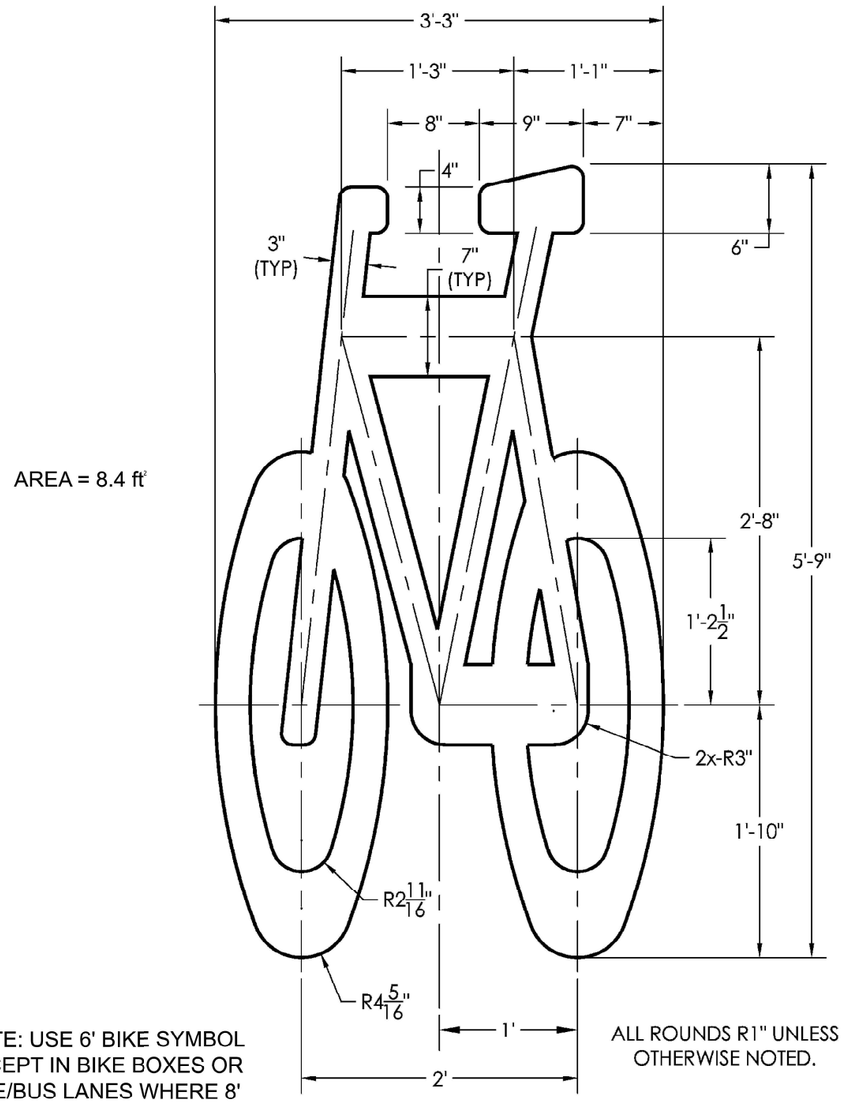

NOTE: USE 6' BIKE SYMBOL EXCEPT IN BIKE BOXES OR BIKE/BUS LANES WHERE 8' BIKE SYMBOL SHALL BE USED

ALL ROUNDS R1" UNLESS OTHERWISE NOTED.

CDOT Chicago Department of Transportation	DATE	REVISION	CITY OF CHICAGO		
	01/01/2014	REVISION 1	6' BIKE SYMBOL		
	05/15/2023	REVISION 2			
	02/03/2025	REVISION 3	DATE	SHEET	DRAWN BY
			06/25/12	A-7-2	CDOT

NOTES:

CURB RAMP LAYOUT B-1-2 IS PREFERRED WHEREVER POSSIBLE. WHERE RAMPS ARE LOCATED IN THE CORNER RADIUS, LAYOUT B-1-3 SHALL BE USED

CURB RAMP PLACEMENT SHALL BE COORDINATED AS REQUIRED TO ALLOW FOR A 4' MINIMUM WIDTH SIDEWALK AROUND EACH CORNER OF INTERSECTION. SIDEWALK NOT TO BE OBSTRUCTED BY CURB RAMPS OR OTHER BARRIERS AND SHALL HAVE A CROSS SLOPE OF 1:64 MAXIMUM

THE BLENDED TRANSITION LAYOUT B-1-7 (AND SIMILAR) MAY BE USED WHERE TWO RAMPS ARE NOT POSSIBLE DUE TO GEOMETRIC CONSTRAINTS, SUCH AS LIMITED SIDEWALK WIDTH OR GRADE ELEVATIONS. THE BLENDED TRANSITION SHALL NOT BE USED IF ACCESS TO AN EXISTING FACILITY WOULD BE REDUCED

THE SHARED PERPENDICULAR RAMP AT CORNER LAYOUT B-1-10 IS NOT PREFERRED AND MAY ONLY BE USED WITH PERMISSION FROM THE COMMISSIONER

SEE SHEET B-3-3 FOR TRANSITION PANEL GUIDELINES

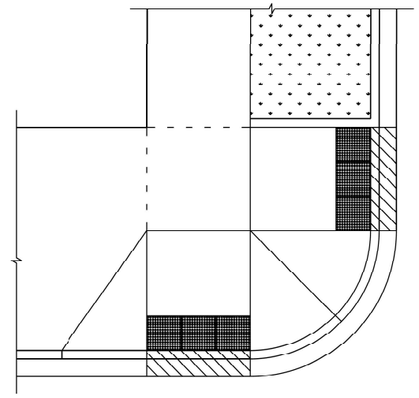

SHEET B-1-2: 2 PERPENDICULAR RAMPS

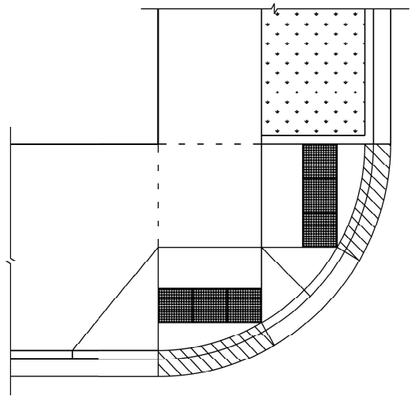

SHEET B-1-3: 2 RAMPS IN RADIUS

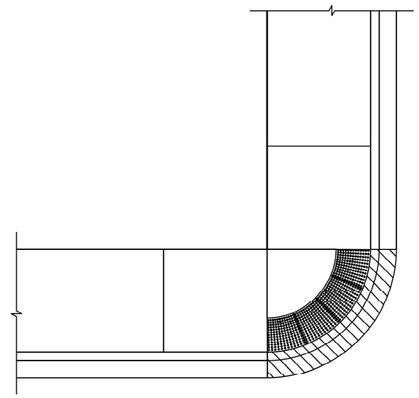

SHEET B-1-7: BLENDED TRANSITION

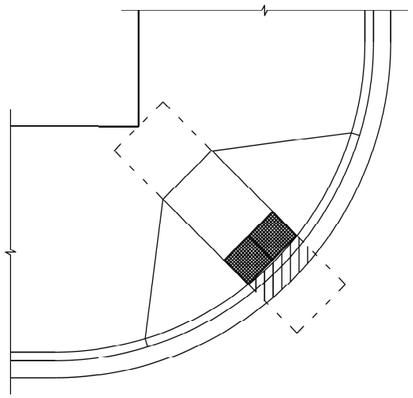

SHEET B-1-10: SHARED PERPENDICULAR RAMP AT CORNER

CDOT Chicago Department of Transportation	DATE	REVISION
	02/20/07	REVISION 1
	11/15/07	REVISION 2
	11/14/08	REVISION 3
	11/02/09	REVISION 4
	08/10/12	REVISION 5
	02/01/25	REVISION 6

CITY OF CHICAGO
TYPICAL CORNER RAMP LAYOUTS
SHEET B-1-1

SCALE: NOT TO SCALE
DATE: 10/23/2006

DRAWN BY: CDOT
CHECKED BY: TRANSYSTEMS

MODEL: Default
FILE NAME: P:\10-IL\14411-IDOT - Sacramento and Paulina over I-290\Work\CADD\Sacramento - Contract 62K65\CADD_Sheets\D162K65-sht-standards-CDOT.dgn

COLLINS ENGINEERS INC.	USER NAME = omartinez	DESIGNED -	REVISED -	STATE OF ILLINOIS DEPARTMENT OF TRANSPORTATION	CHICAGO DEPARTMENT OF TRANSPORTATION STANDARD DRAWINGS	F.A.I. RTE.	SECTION	COUNTY	TOTAL SHEETS	SHEET NO.
		DRAWN -	REVISED -			290	2019-192-B-R	COOK	237	232
	PLOT SCALE = $SCALE$	CHECKED -	REVISED -			CONTRACT NO. 62K65				
	PLOT DATE = 9/12/2025	DATE -	REVISED -		SCALE: SHEET OF SHEETS STA. TO STA.	ILLINOIS FED. AID PROJECT				

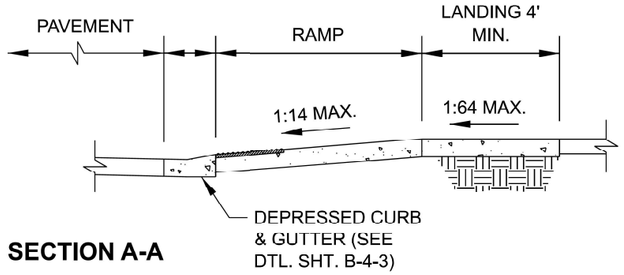

SECTION A-A

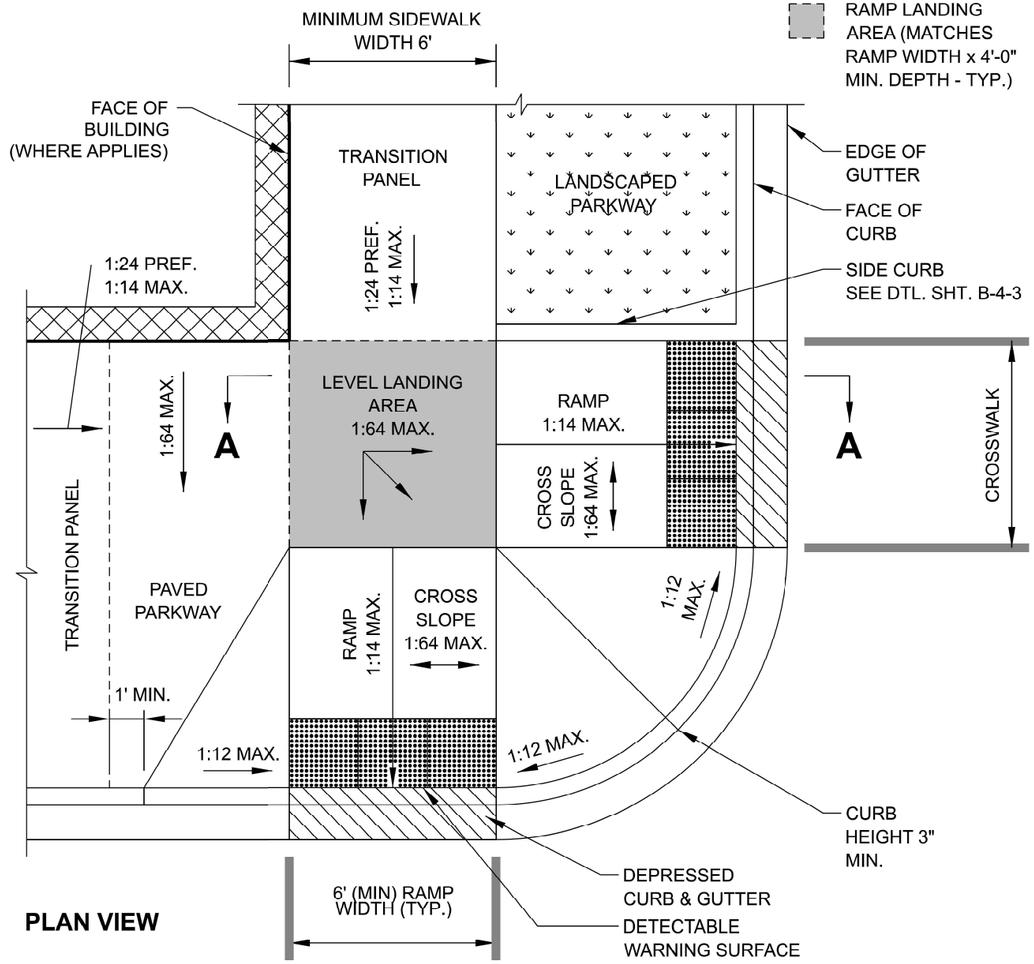

PLAN VIEW

DATE	REVISION
02/20/07	REVISION 1
11/15/07	REVISION 2
11/14/08	REVISION 3
11/02/09	REVISION 4
08/10/12	REVISION 5
02/01/25	REVISION 6

CDOT Chicago Department of Transportation

CITY OF CHICAGO
2 PERPENDICULAR RAMPS AT CORNER
SHEET B-1-2

SCALE: NOT TO SCALE
DATE: 10/23/2006

DRAWN BY: CDOT
CHECKED BY: TRANSYSTEMS

* WHERE RAMP AND SIDE FLARE SLOPES ARE NOT NECESSARY TO CONNECT STREET AND SIDEWALK, THE DETECTABLE WARNING TILES MUST FIT BACK OF CURB (SIMILAR TO SHEETS B-1-7 THRU B-1-9) FOR SIDE FLARES REFER TO NOTE 10 ON B-3-2

** REFER TO DTL. SHT. B-1-5 WHERE TILE SETBACK EXCEEDS 5'-0"

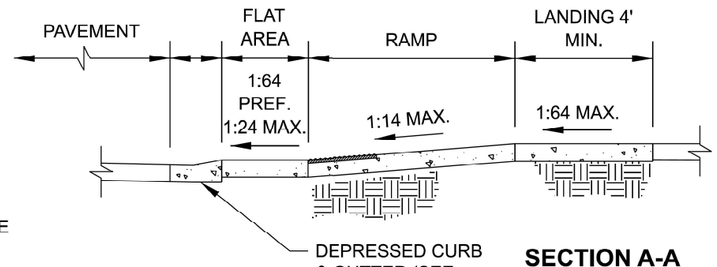

SECTION A-A

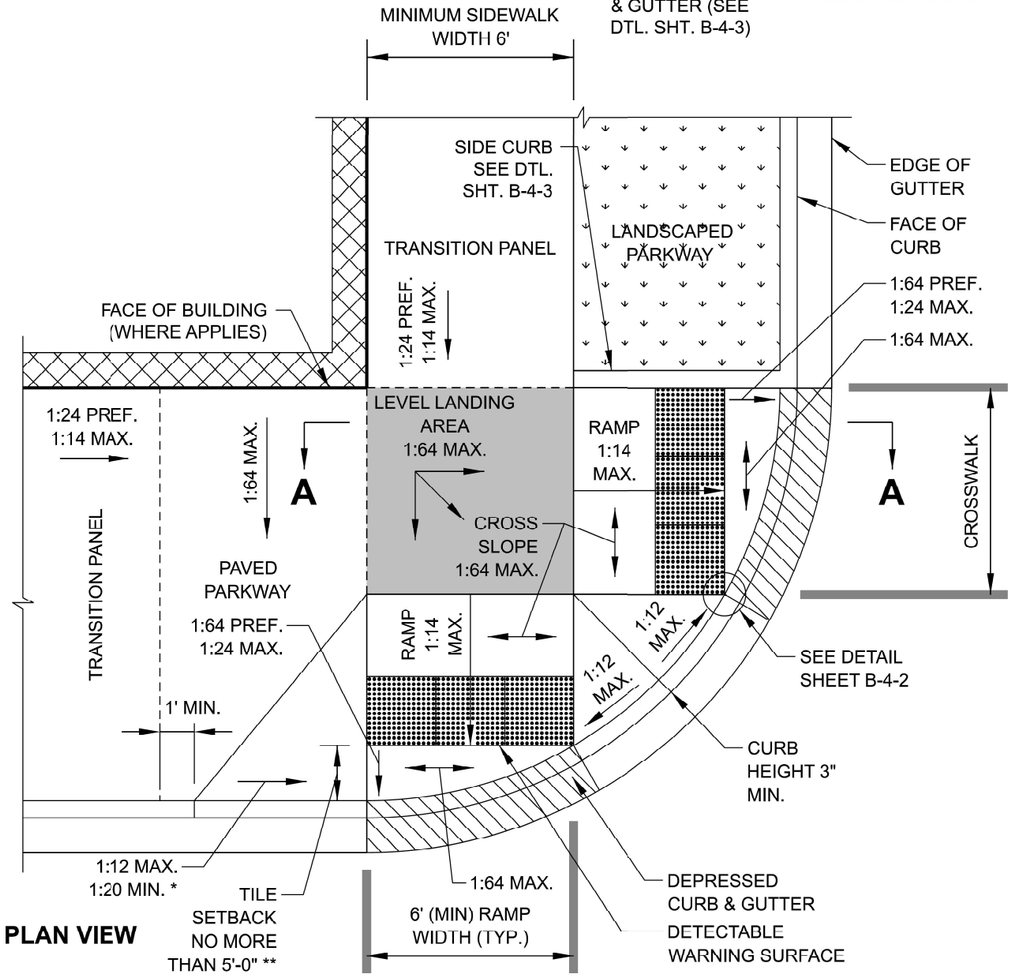

PLAN VIEW

DATE	REVISION
02/20/07	REVISION 1
11/15/07	REVISION 2
11/14/08	REVISION 3
11/02/09	REVISION 4
08/10/12	REVISION 5
02/01/25	REVISION 6

CDOT Chicago Department of Transportation

CITY OF CHICAGO
2 PERPENDICULAR RAMPS AT CORNER
WITH RAMPS IN CURB RADIUS
SHEET B-1-3

SCALE: NOT TO SCALE
DATE: 10/23/2006

DRAWN BY: CDOT
CHECKED BY: TRANSYSTEMS

MODEL: Default
FILE NAME: P:\104\11441-IDOT - Sacramento and Paulina over I-290\Work\CADD\Sacramento - Contract 62K65\CADD Sheets\D162K65-ahn-standards-CDOT.dgn

COLLINS ENGINEERS INC.

USER NAME = omartinez	DESIGNED -	REVISED -
	DRAWN -	REVISED -
PLOT SCALE = $SCALE$	CHECKED -	REVISED -
PLOT DATE = 9/12/2025	DATE -	REVISED -

STATE OF ILLINOIS
DEPARTMENT OF TRANSPORTATION

CHICAGO DEPARTMENT OF TRANSPORTATION
STANDARD DRAWINGS

SCALE: | SHEET OF SHEETS | STA. | TO STA.

F.A.J. RTE.	SECTION	COUNTY	TOTAL SHEETS	SHEET NO.
290	2019-192-B-R	COOK	237	233
		CONTRACT NO. 62K65		
		ILLINOIS FED. AID PROJECT		

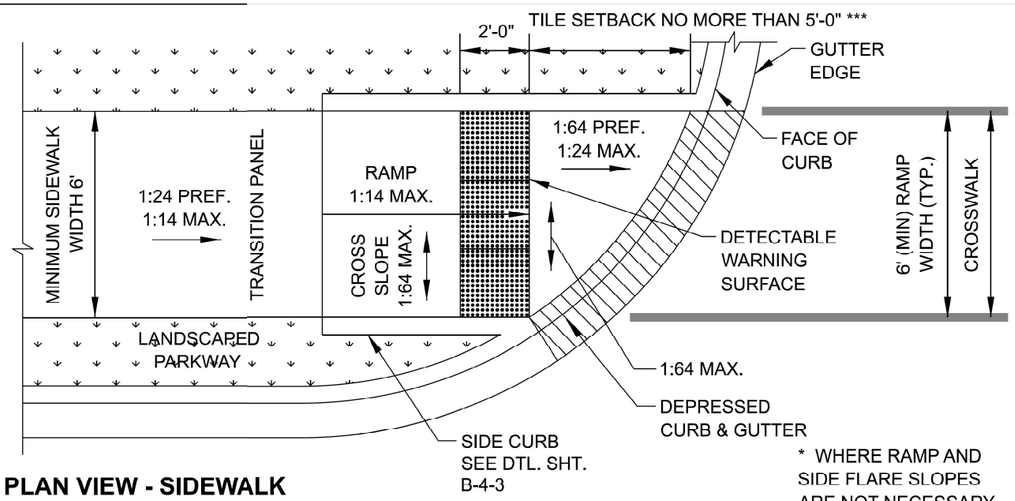

PLAN VIEW - SIDEWALK THROUGH PARKWAY

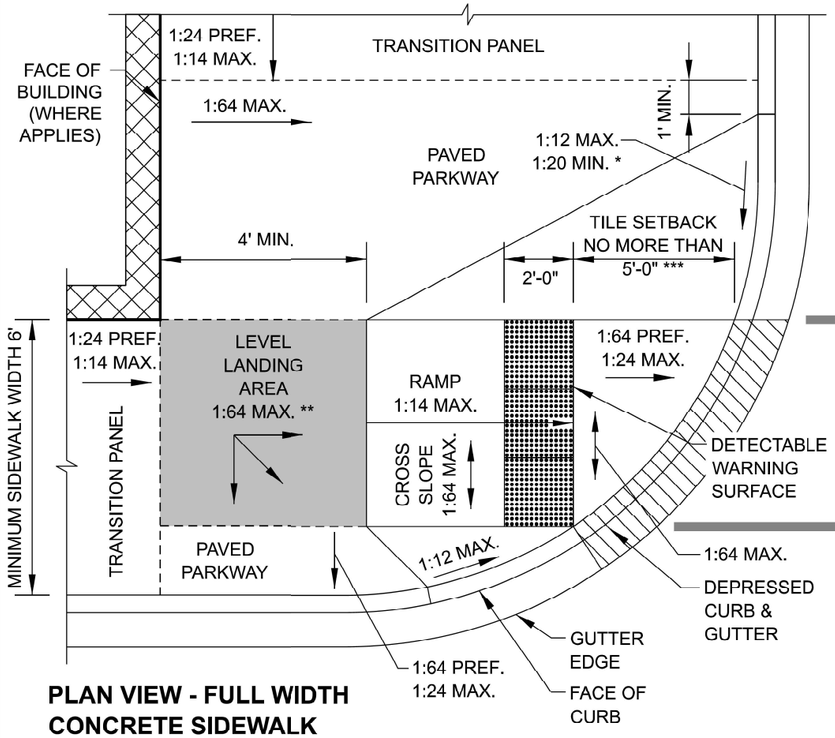

PLAN VIEW - FULL WIDTH CONCRETE SIDEWALK

* WHERE RAMP AND SIDE FLARE SLOPES ARE NOT NECESSARY TO CONNECT STREET AND SIDEWALK, THE DETECTABLE WARNING TILES MUST FIT BACK OF CURB (SIMILAR TO SHEETS B-1-7 THRU B-1-9) FOR SIDE FLARES REFER TO NOTE 10 ON B-3-2

** LEVEL LANDING AREA REQUIRED WHERE SIDEWALKS INTERSECT AT TOP OF RAMP

*** REFER TO DTL. SHT. B-1-5 WHERE TILE SETBACK EXCEEDS 5'-0"

DATE	REVISION
02/20/07	REVISION 1
11/15/07	REVISION 2
11/14/08	REVISION 3
11/02/09	REVISION 4
08/10/12	REVISION 5
02/01/25	REVISION 6

CDOT Chicago Department of Transportation

CITY OF CHICAGO
PERPENDICULAR RAMP AT CORNER
IN CURB RADIUS WITH SINGLE CROSSING

SCALE: NOT TO SCALE
DATE: 10/23/2006

SHEET B-1-4

DRAWN BY: CDOT
CHECKED BY: TRANSYSTEMS

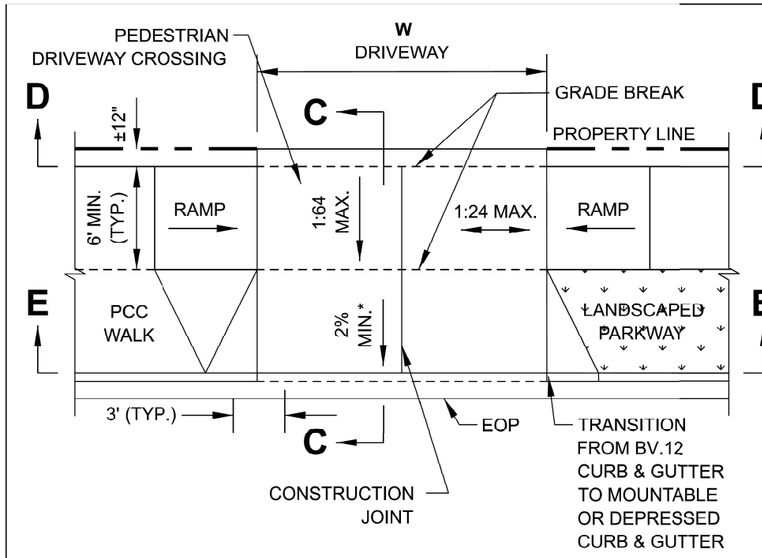

ALLEY NOTES:

A. DETECTABLE WARNING TILES ARE NOT REQUIRED AT NON-SIGNALIZED DRIVEWAYS

B. RAMP DETAILS ARE DEPENDENT UPON SITE SPECIFIC CONDITIONS (WHERE RAMPS ARE NECESSARY). SEE APPROPRIATE RAMP SHEET AS REQUIRED (TYP.)

C. SEE DETAIL B-2-5 FOR REDUCED WIDTH (4' MIN.) PEDESTRIAN ACCESSIBLE ROUTE ACROSS ALLEY / DRIVEWAY (TO ALLOW FOR ADDITIONAL SLOPE AT ALLEY / DRIVEWAY)

D. DEPENDENT UPON TYPE & VOLUME OF TRAFFIC

* SLOPE VARIES AND IS NOT GOVERNED BY ADA

OPTION A - DRIVEWAY WITH FLARES

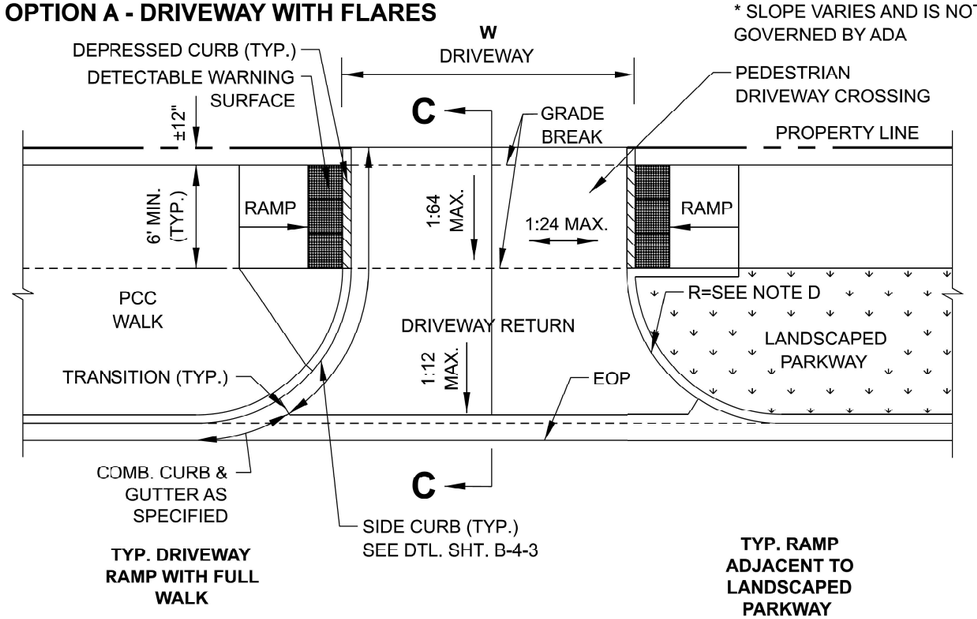

TYP. DRIVEWAY RAMP WITH FULL WALK

TYP. RAMP ADJACENT TO LANDSCAPED PARKWAY

OPTION B - COMMERCIAL AND RESIDENTIAL DRIVEWAY WITH CURB
FOR USE WITH TRAFFIC SIGNALIZATION APPROVED BY CITY ORDINANCE

DATE	REVISION
11/15/07	REVISION 2
11/14/08	REVISION 3
11/02/09	REVISION 4
08/10/12	REVISION 5
01/01/14	REVISION 6
02/01/25	REVISION 7

CDOT Chicago Department of Transportation

CITY OF CHICAGO
DRIVEWAY CONSTRUCTION PLAN VIEWS

SCALE: NOT TO SCALE
DATE: 10/23/2006

SHEET B-2-2A

DRAWN BY: CDOT
CHECKED BY: TRANSYSTEMS

MODEL: Default
FILE NAME: P:\1041\1441\1-RDOT - Sacramento and Pulliha over I-290\Work\CADD\Sacramento - Contract 62K65\CADD_Sheets\D162K65-sht-standard-CDOT.dgn

COLLINS ENGINEERS INC.

USER NAME = amartinez	DESIGNED -	REVISED -	
	DRAWN -	REVISED -	
PLOT SCALE = $SCALE$	CHECKED -	REVISED -	
PLOT DATE = 9/12/2025	DATE -	REVISED -	

STATE OF ILLINOIS
DEPARTMENT OF TRANSPORTATION

CHICAGO DEPARTMENT OF TRANSPORTATION
STANDARD DRAWINGS

SCALE: | SHEET OF SHEETS | STA. | TO STA.

F.A.I. RTE.	SECTION	COUNTY	TOTAL SHEETS	SHEET NO.
290	2019-192-B-R	COOK	237	234
		CONTRACT NO. 62K65		
		ILLINOIS	FED. AID PROJECT	

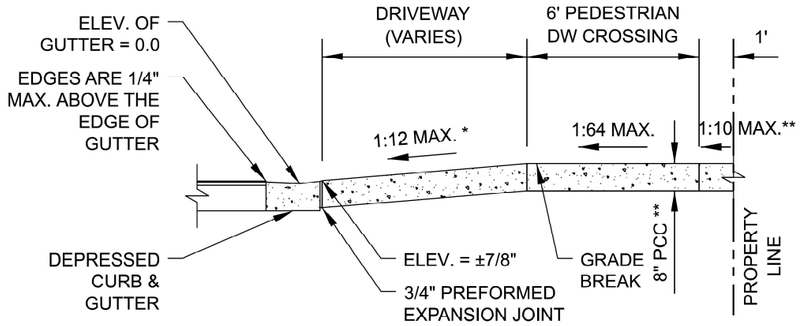

SECTION C-C: SECTION SHOWING DEPRESSED CURB & GUTTER

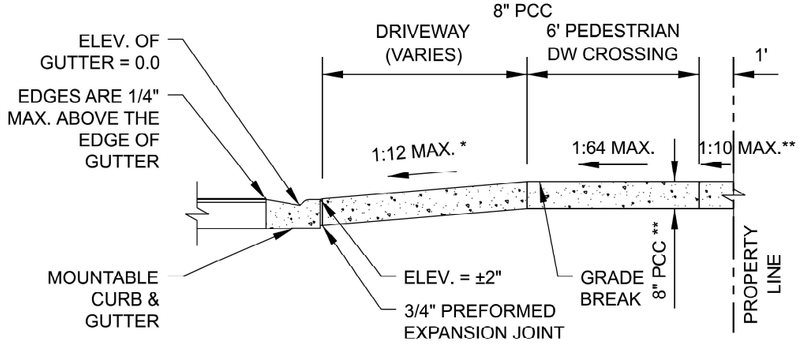

SECTION C-C: SECTION SHOWING MOUNTABLE CURB & GUTTER

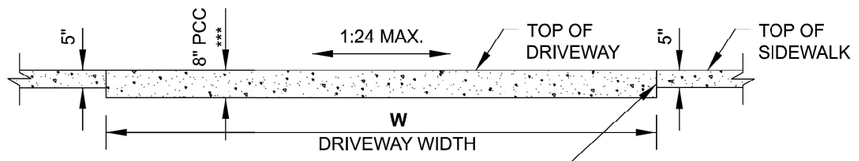

SECTION D-D

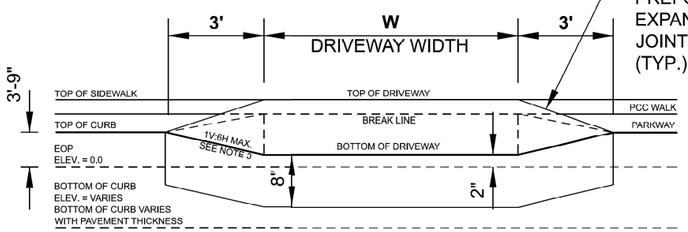

SECTION E-E

* SLOPE VARIES AND IS NOT GOVERNED BY ADA

** CONCRETE SIDEWALK ON TOP OF 6" SUBBASE GRANULAR MATERIAL TYPE B

DATE	REVISION
11/15/07	REVISION 2
11/14/08	REVISION 3
11/02/09	REVISION 4
08/10/12	REVISION 5
01/01/14	REVISION 6
02/01/25	REVISION 7

CDOT Chicago Department of Transportation

CITY OF CHICAGO
DRIVEWAY CONSTRUCTION SECTIONS
SHEET B-2-2B

SCALE: NOT TO SCALE
DATE: 10/23/2006

DRAWN BY: CDOT
CHECKED BY: TRANSYSTEMS

SLOPE CONVERSION CHART

% SLOPE	SLOPE RATIO	INCHES PER FOOT	DECIMAL FEET PER FOOT
16.67%	1:6	2"	0.167'
10%	1:10	1 1/4"	0.104'
8.33%	1:12	1"	0.083'
7.14%	1:14	7/8"	0.073'
5%	1:20	5/8"	0.052'
4.17%	1:24	1/2"	0.042'
2%	1:50	1/4"	0.021'
1.56%	1:64	3/16"	0.016'

DATE	REVISION
02/20/07	REVISION 1
11/15/07	REVISION 2
11/14/08	REVISION 3
11/02/09	REVISION 4
08/10/12	REVISION 5

CDOT Chicago Department of Transportation

CITY OF CHICAGO
CONVERSION CHARTS
SHEET B-3-1

SCALE: NOT TO SCALE
DATE: 10/23/2006

DRAWN BY: CDOT
CHECKED BY: TRANSYSTEMS

MODEL: Default
FILE NAME: P:\194\1441-HDOT - Sacramento and Paulina over I-290\Work\CADD\Sacramento - Contract 62K65\CADD Sheets\D162K65-dh-standards-CDOT.dgn

COLLINS ENGINEERS INC.

USER NAME = dmartinez	DESIGNED -	REVISED -
	DRAWN -	REVISED -
PLOT SCALE = 5SCALES	CHECKED -	REVISED -
PLOT DATE = 9/12/2025	DATE -	REVISED -

STATE OF ILLINOIS
DEPARTMENT OF TRANSPORTATION

CHICAGO DEPARTMENT OF TRANSPORTATION
STANDARD DRAWINGS

SCALE: | SHEET OF SHEETS | STA. | TO STA.

F.A.I. RTE.	SECTION	COUNTY	TOTAL SHEETS	SHEET NO.
290	2019-192-B-R	COOK	237	235
		CONTRACT NO. 62K65		
	ILLINOIS	FED. AID PROJECT		

GENERAL NOTES:

1. THE DETECTABLE WARNING TILES INSTALLED SHALL BE CHOSEN FROM THE CHICAGO DEPARTMENT OF TRANSPORTATION LIST OF APPROVED DETECTABLE WARNING PRODUCTS (SEE THE CITY OF CHICAGO APPROVED DETECTABLE WARNING PRODUCT LIST). IT IS NOT ACCEPTABLE TO INSTALL TWO DIFFERENT DETECTABLE WARNING PRODUCTS ADJACENT TO ONE ANOTHER AT ANY LOCATION. IN THE CENTRAL BUSINESS DISTRICT, GRANITE OR OTHER SPECIALTY PAVING MATERIALS MAY BE SUBMITTED TO THE COMMISSIONER FOR APPROVAL

2. THE DETECTABLE WARNING MUST BE INSTALLED A MAXIMUM OF 8" FROM FACE TO CURB (SEE DETAIL SHEET B-4-2)

3. THE DETECTABLE WARNING MUST COVER FULL WIDTH OF RAMP EXCLUDING SIDE FLARES FOR A MINIMUM UNOBSTRUCTED DEPTH OF 24". THE DETECTABLE WARNING LOCATED ON THE SURFACES OF RAMPS ARE TYPICALLY ORIENTED PERPENDICULAR TO THE RUN OF THE RAMP UNLESS SPECIAL CIRCUMSTANCES OCCUR (SEE DETAIL SHEET B-1-5). THE DETECTABLE WARNING MUST BE PROVIDED FOR A MINIMUM DEPTH OF 24" FOR THE ENTIRE LENGTH OF THE SIDEWALK WHERE THE SIDEWALK IS FLUSH WITH THE STREET (DEPRESSED CURB OR FLUSH TRANSITION). IF IT IS NECESSARY TO CUT UNIT(S) IN THE PROVISION OF A COMPLIANT RAMP OR SIDEWALK WITH 24" MINIMUM DEPTH OF DETECTABLE WARNING, THE UNITS SHALL BE CUT IN A NEAT AND WORKMANLIKE MANNER PER MANUFACTURER'S REQUIREMENTS WITH A MINIMUM OF THREE PINS OR ANCHOR POINTS (AS APPLICABLE). THE UNITS SHALL BE ARRANGED SO THAT THE CUT TILES ARE LARGE ENOUGH TO BE PROPERLY AND ADEQUATELY SECURED. CUT UNITS SHALL NOT BE USED UNLESS ALL OTHER DESIGN OPTIONS HAVE BEEN EXHAUSTED. THE USE OF SALVAGE PIECES FROM UNITS THAT ARE CUT WILL NOT BE PERMITTED WITHOUT WRITTEN APPROVAL OF THE COMMISSIONER. CUT UNIT SALVAGE PIECES NOT APPROVED FOR USE MUST BE REMOVED FROM THE SITE AND DISPOSED PROPERLY

4. WHERE APPLICABLE, A COMBINATION OF STRAIGHT AND RADIAL DETECTABLE WARNING UNITS MAY BE USED ON COMPOUND AND LARGE RADII. CONTRACTOR MUST MAKE THIS DETERMINATION AND VERIFY IN FIELD

5. PRIOR TO PLACING CONCRETE FOR DEPRESSED CURBS, RAMPS, OR SIDEWALKS THE CONTRACTOR SHALL VERIFY THAT LAYOUT OR DESIGN COMPLIES WITH THE REQUIREMENTS OF THE CDOT ADA STANDARDS

6. RAMP WIDTH MUST BE A MINIMUM OF 6'-0" AND IN INCREMENTS OF 1'-0", EXCEPT WHEN USING THE PERPENDICULAR RAMP AT CORNER (OR OTHER SPECIAL CDOT APPROVED CONDITIONS), WHICH HAS A MINIMUM WIDTH OF 4'-0"

7. THE MAXIMUM ALLOWABLE RAMP RUNNING SLOPE IS 1:14, MEASURED AT ANY PORTION OF THE RAMP. IF POSSIBLE, A MORE GRADUAL SLOPE SHALL BE USED. GRADE BREAKS AT THE TOP AND BOTTOM OF RAMPS SHALL BE PERPENDICULAR TO THE DIRECTION OF RAMP RUN

8. THE MAXIMUM ALLOWABLE RAMP CROSS SLOPE IS 1:64, MEASURED AT ANY PORTION OF THE RAMP

9. THE MAXIMUM ALLOWABLE RAMP LANDING SLOPE IS 1:64, MEASURED AT ANY LOCATION AND IN ANY DIRECTION ON THE LANDING. THE RAMP LANDING WIDTH SHALL MATCH THE FULL WIDTH OF THE RAMP FOR A MINIMUM UNOBSTRUCTED DEPTH OF 4'-0". RAMP LANDINGS SHALL BE PROVIDED AT THE TOP AND/OR BOTTOM OF RAMPS WHERE TURNING IS REQUIRED

10. RAMP SIDE FLARES SHALL BE INSTALLED AT ANY LOCATION WHERE THE SURFACE ADJACENT TO THE RAMP SURFACE IS INTENDED FOR PEDESTRIAN USE. TRIPPING HAZARDS, INCLUDING STEPS, DROP-OFFS, OR CURBS SHALL NOT BE LOCATED WITHIN THE LIMITS OF THE SIDEWALK. RAMPS SIDE FLARES ARE NOT REQUIRED WHERE THE SURFACE ADJACENT TO THE RAMP SURFACE IS LANDSCAPE OR IS OCCUPIED BY A BARRIER THAT BLOCKS PEDESTRIAN ACCESS. EXCEPTION TO THIS RULE MAY BE SUBMITTED TO THE COMMISSIONER FOR APPROVAL

11. UTILITIES, SUCH AS LIGHT POLES, TRAFFIC POLES AND HYDRANTS, MAY BE LOCATED IN THE FLARE OF THE RAMP BUT ARE NOT ALLOWED ON THE RAMP SURFACE OR LANDING AREAS. EXISTING UTILITY STRUCTURE LIDS MAY REMAIN WITHIN THE FLARE OR ON THE SURFACE OF THE RAMP IF THE EQUIPMENT OF GENERAL NOTE #19 ARE MET

12. ALL LOCATIONS WITH TYPE B CURB (EXCEPT ALLEY APRONS) SHALL BE CONSTRUCTED AS CURB AND GUTTER TYPE BV.12 THROUGH THE LIMITS OF THE CORNER AND THE CURB RAMPS

CDOT Chicago Department of Transportation

DATE	REVISION
02/20/07	REVISION 1
11/15/07	REVISION 2
11/14/08	REVISION 3
11/02/09	REVISION 4
08/10/12	REVISION 5
02/01/25	REVISION 6

CITY OF CHICAGO
GENERAL NOTES
SHEET B-3-2

SCALE: NOT TO SCALE
DATE: 10/23/2006

DRAWN BY: CDOT
CHECKED BY: TRANSYSTEMS

GENERAL NOTES (CONTINUED):

13. ALTERATIONS SHALL NOT DECREASE THE ACCESSIBILITY TO EXISTING FACILITIES, SIDEWALKS LEADING TO EXISTING FACILITIES OR DOOR OR GATE ACCESS POINTS TO FACILITIES. THE ELEVATION AT THE EXISTING PROPERTY LINE OR FACILITY ACCESS POINT SHALL BE MAINTAINED. ANY ALTERATIONS ADJACENT TO OR AFFECTING A FACILITY ACCESS POINT SHALL RESULT IN IMPROVED ACCESS OR AT A MINIMUM A REPLICATION OF EXISTING CONDITIONS, INCLUDING SIDEWALK SLOPES AND SURFACE CONDITIONS. FACILITIES INCLUDE, BUT ARE NOT LIMITED TO PRIVATE BUSINESSES, PUBLIC BUILDINGS, RESIDENCES, BUS STOPS, PUBLIC BENCHES, AND PARKING PAY STATION

14. IF RUNNING SLOPE OF SIDEWALK AND ALLEY ARE LESS THAN 1:50, A RAMP IS NOT REQUIRED. IF SIDEWALK AND DRIVEWAY ARE AT THE SAME GRADE, A RAMP IS NOT REQUIRED BUT DETECTABLE WARNING TILES ARE STILL REQUIRED IF THE DRIVEWAY HAS TRAFFIC CONTROL DEVICES (I.E. TRAFFIC SIGNALS)

15. MAINLINE SIDEWALK RUNNING SLOPES SHALL NOT EXCEED 1:24 OR THE GENERAL GRADE ESTABLISHED FOR THE ADJACENT STREET, WHICH EVER IS HIGHER

16. THERE SHALL BE NO VERTICAL LEVEL DIFFERENCES BETWEEN SURFACES GREATER THAN 1/4" ON THE MAINLINE SIDEWALK. THERE SHALL BE NO HORIZONTAL GAPS OR OPENINGS GREATER THAN 1/2" ON THE MAINLINE SIDEWALK

17. THE CLEAR WIDTH OF USEABLE SIDEWALK SHALL NOT BE LESS THAN 4'-0". OBSTRUCTIONS INCLUDE, BUT ARE NOT LIMITED TO SIDEWALK BENCHES, FIRE HYDRANTS, SIGNAL OR LIGHT POLES, PARKING PAY STATION, NEWSPAPER DISPENSERS, TRASH RECEPTACLES, AND UTILITY PEDESTALS

18. CURB RAMPS AND LANDING (KEYSTONE) TO BE CONSTRUCTED WITH 8" THICK CONCRETE AT ALL TRAFFIC SIGNALIZED INTERSECTIONS AND INDUSTRIAL STREET INTERSECTIONS. AT ALL OTHER LOCATIONS, 5" THICK CONCRETE TO BE USED

19. DEPRESSED CURB, RAMP, OR SIDEWALK DESIGNS OR LAYOUTS SHALL MAINTAIN OR IMPROVE EXISTING DRAINAGE AND THE EXISTING INTERSECTION GEOMETRY SHALL NOT BE MODIFIED WITHOUT CDOT APPROVAL

20. ALL CONSTRUCTION DOCUMENTS MUST BE STAMPED BY A LICENSED ARCHITECT/LANDSCAPE ARCHITECT/ENGINEER TO CERTIFY THAT THEY ARE IN ACCORDANCE WITH THE AMERICANS WITH DISABILITIES ACT (ADA) AND ALL CODES AND BUILDING ORDINANCES OF THE CITY OF CHICAGO AND STATE OF ILLINOIS

21. NO DEVIATIONS FROM THESE STANDARDS ARE ALLOWED WITHOUT WRITTREN APPROVAL FROM THE COMMISSIONER

CDOT Chicago Department of Transportation

DATE	REVISION
11/15/07	REVISION 2
11/14/08	REVISION 3
11/02/09	REVISION 4
08/10/12	REVISION 5
01/01/14	REVISION 6
02/01/25	REVISION 7

CITY OF CHICAGO
GENERAL NOTES (CONTINUED)
SHEET B-3-3

SCALE: NOT TO SCALE
DATE: 10/23/2006

DRAWN BY: CDOT
CHECKED BY: TRANSYSTEMS

MODEL: Default
FILE NAME: P:\DOT\14411-DOT - Sacramento and Pulaski over I-290\Work\CADD\Sacramento - Contract 62K65\CADD Sheets\D162K65-4th-standards-CDOT.dgn

COLLINS ENGINEERS INC

USER NAME = omartinez	DESIGNED -	REVISED -
	DRAWN -	REVISED -
PLOT SCALE = $SCALES	CHECKED -	REVISED -
PLOT DATE = 9/12/2025	DATE -	REVISED -

STATE OF ILLINOIS
DEPARTMENT OF TRANSPORTATION

CHICAGO DEPARTMENT OF TRANSPORTATION
STANDARD DRAWINGS

SCALE: | SHEET OF SHEETS | STA. | TO STA.

F.A.I. RTE.	SECTION	COUNTY	TOTAL SHEETS	SHEET NO.
290	2019-192-B-R	COOK	237	236
		CONTRACT NO. 62K65		
	ILLINOIS FED. AID PROJECT			

ADA COMPLIANCE AND TRANSITION GUIDELINES

POLICY STATEMENT: ANY ALTERATION OF THE PUBLIC WAY MUST BE RESTORED IN AN ADA COMPLIANT MANNER

I. STREET/ALLEY RECONSTRUCTION

FOR ANY PROJECT WHERE, WITHIN THE PROJECT LIMITS, A CROSSWALK IS ENCOUNTERED OR WHERE THE PROJECT LIMITS TERMINATE WITHIN 4' OR LESS OF A CROSSWALK, THOSE CROSSWALKS AND THE ASSOCIATED CURB RAMPS MUST BE IMPROVED TO CURRENT ADA STANDARDS IF THEY ARE NOT COMPLIANT (SEE APPENDIX A)

WHEN A PROJECT CALLS FOR ONLY AN INTERSECTION TO BE REPAVED, THE INTERSECTION LIMITS AS DEFINED BY THE AREA OUTLINED BY OUTERMOST CROSSWALK LINES AND ADJACENT CURB FACES AND ALL ADJOINING CROSSWALKS AND CURB RAMPS MUST BE IMPROVED TO CURRENT ADA STANDARDS IF THEY ARE NOT COMPLIANT (SEE APPENDIX A)

WHEN WORK IS LIMITED TO A SINGLE CORNER OF AN INTERSECTION, THE ADJACENT PAVEMENT MUST BE RESTORED (SEE APPENDIX A)

FOR ANY CONSTRUCTION WHERE, WITHIN THE PROJECT LIMITS, AN ALLEY APRON IS ENCOUNTERED, THE ASSOCIATED CURB RAMPS, ALLEY APRON, AND SIDEWALKS MUST BE IMPROVED TO CURRENT ADA STANDARDS IF THEY ARE NOT COMPLIANT (SEE APPENDIX A)

II. SIDEWALK INSTALLATION / REPAIRS / RECONSTRUCTION

THE LIMITS OF ANY MAINLINE SIDEWALK REPLACEMENT, GREATER THAN TEN FEET (10') IN LENGTH, THAT ABUT AN EXISTING RAMP, KEYSTONE, TRANSITION PANEL, AND/OR LANDING AREA (THIS TOTAL LENGTH INCLUDES THE PRIOR ELEMENTS), SHALL BE EXTENDED TO INCLUDE THE AFFECTED RAMPS AND THESE RAMPS SHALL BE RECONSTRUCTED TO CURRENT ADA STANDARDS. IN ADDITION, ALL NEWLY PLACED SIDEWALK TEN FEET (10') OR MORE IN LENGTH SHALL BE CONSTRUCTED IN ACCORDANCE WITH ALL CURRENT APPLICABLE STANDARDS WHICH INCLUDE PROVIDING A MINIMUM FOUR FEET (4') WIDTH ACCESSIBLE PATHWAY WITH A CROSS SLOPE NOT TO EXCEED 1:64 (SEE APPENDIX A)

III. GUIDELINES FOR TRANSITIONING TO EXISTING NON-COMPLIANT CONDITION

NEW SIDEWALK PLACEMENTS GREATER THAN TEN FEET IN CONTIGUOUS LENGTH:

THE LIMITS OF ANY MAINLINE SIDEWALK REPLACEMENT, GREATER THAN TEN FEET (10') IN LENGTH, MUST BE EXTENDED FOR A MINIMUM FIVE ADDITIONAL FEET (5') EITHER SIDE IN ORDER TO PROVIDE A TRANSITION TO MATCH THE EXISTING SIDEWALK, IF THE ADJACENT SIDEWALK IS NOT ALREADY COMPLIANT (SEE APPENDIX A). THE LENGTH OF TRANSITION SHALL BE LENGTHENED AS NECESSARY TO ENSURE THAT THE RUNNING SLOPE OF THE TRANSITION DOES NOT EXCEED A SLOPE OF 1:24 (PREFERRED) OR 1:14 (MAXIMUM) AT ANY POINT

NEW SIDEWALK REPLACEMENTS TEN FEET OR LESS IN CONTIGUOUS LENGTH (REPAIRS):

IT IS ACCEPTABLE PRACTICE TO MATCH ADJACENT SIDEWALKS AT THE EXISTING SLOPE

CURB RAMP REPLACEMENTS:

WHEN REPLACING AN ADA RAMP, THE SIDEWALK REPLACEMENT MUST EXTEND BEYOND THE LIMITS OF THE LANDING AREA AND/OR THE "KEYSTONE" A MINIMUM OF AN ADDITIONAL FIVE FEET (5') ON EITHER SIDE IN ORDER TO PROVIDE A TRANSITION TO MATCH THE EXISTING SIDEWALK, IF THE ADJACENT SIDEWALK IS NOT ALREADY COMPLIANT (SEE APPENDIX A). THE TRANSITION SHALL BE LENGTHENED AS NECESSARY TO ENSURE THAT THE RUNNING SLOPE OF THE TRANSITION PANEL DOES NOT EXCEED A SLOPE OF 1:24 (PREFERRED) OR 1:14 (MAXIMUM) AT ANY POINT

NO EXCEPTIONS TO THE ABOVE WILL BE ALLOWED WITHOUT WRITTEN APPROVAL FROM THE COMMISSIONER

DATE	REVISION
11/15/07	REVISION 2
11/14/08	REVISION 3
11/02/09	REVISION 4
08/10/12	REVISION 5
01/01/14	REVISION 6
02/01/25	REVISION 7

CDOT Chicago Department of Transportation

CITY OF CHICAGO
ADA COMPLIANCE AND TRANSITION GUIDELINES
SHEET B-3-4

SCALE: NOT TO SCALE
DATE: 10/23/2006

DRAWN BY: CDOT
CHECKED BY: TRANSYSTEMS

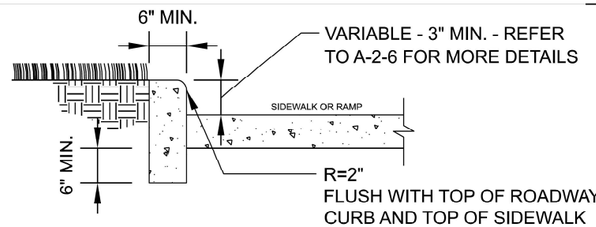

SIDE CURB - SECTION

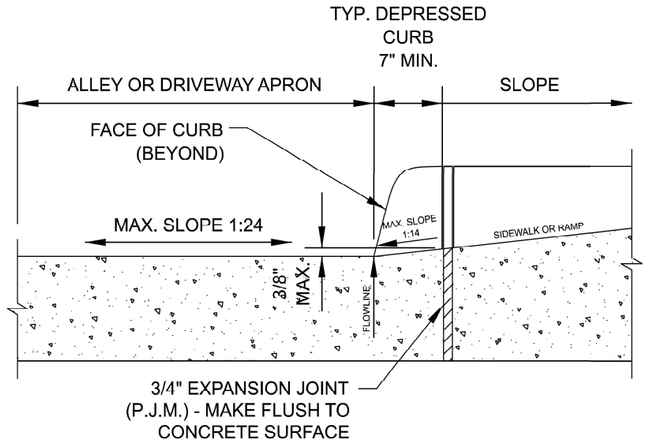

DEPRESSED CURB & GUTTER
AT ALLEY/DRIVEWAY APRON (TYPE B CURB)

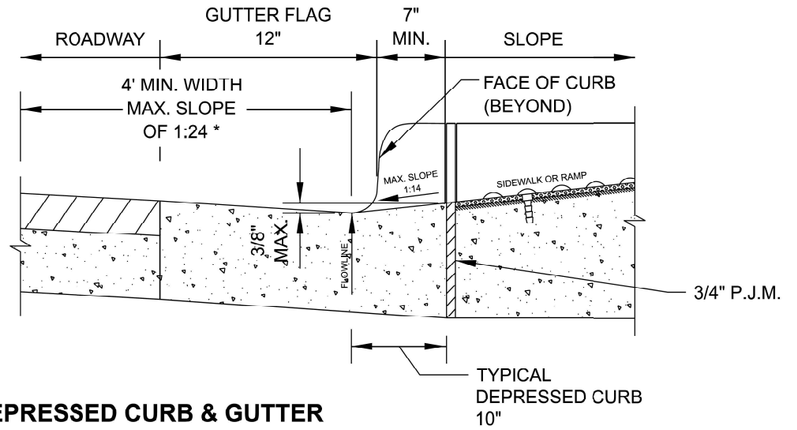

DEPRESSED CURB & GUTTER
AT BOTTOM OF TYPICAL CURB RAMP

NOTES FOR CURB & GUTTER DETAILS THIS SHEET:

A. CROSS SLOPE AT DEPRESSED CURB & GUTTER NOT TO EXCEED 1:64

B. REFER TO *REGULATIONS FOR OPENINGS, CONSTRUCTION AND REPAIR IN THE PUBLIC WAY (CDOT)* FOR ADDITIONAL REQUIREMENTS FOR CURB AND GUTTER INSTALLATION

C. 'P.J.M.' THIS SHEET REFERS TO PREFORMED JOINT MATERIAL

DATE	REVISION
02/20/07	REVISION 1
11/15/07	REVISION 2
11/14/08	REVISION 3
11/02/09	REVISION 4
08/10/12	REVISION 5
02/01/25	REVISION 6

CDOT Chicago Department of Transportation

CITY OF CHICAGO
CURB & GUTTER DETAILS
SHEET B-4-3

SCALE: NOT TO SCALE
DATE: 10/23/2006

DRAWN BY: CDOT
CHECKED BY: TRANSYSTEMS

MODEL: Default
FILE NAME: P:\IDOT\1441-IDOT - Sacramento and Pulaski over I-290\Work\CADD\Sacramento - Contract 62K65\CADD Sheets\D162K65-ahr-standards-CDOT.dgn

COLLINS ENGINEERS INC

USER NAME = amartinez	DESIGNED -	REVISED -
	DRAWN -	REVISED -
PLOT SCALE = $SCALES	CHECKED -	REVISED -
PLOT DATE = 9/12/2025	DATE -	REVISED -

STATE OF ILLINOIS
DEPARTMENT OF TRANSPORTATION

CHICAGO DEPARTMENT OF TRANSPORTATION
STANDARD DRAWINGS

SCALE: | SHEET OF SHEETS | STA. | TO STA.

F.A.I. RTE.	SECTION	COUNTY	TOTAL SHEETS	SHEET NO.
290	2019-192-B-R	COOK	237	237
		CONTRACT NO. 62K65		
		ILLINOIS	FED. AID PROJECT	