01-16-2026 LETTING ITEM 161

F.A.I RTE.	SECTION	COUNTY	TOTAL SHEETS	SHEET NO.
80	2025-2113-B	WILL	53	1
	ILLINOIS	CONTRACT NO. 80C53		

FOR INDEX OF SHEETS, SEE SHEET NO. 2

STATE OF ILLINOIS
DEPARTMENT OF TRANSPORTATION

D-91-205-19

PROPOSED
HIGHWAY PLANS

FAI ROUTE 80 (INTERSTATE 80)
IL ROUTE 53 (CHICAGO ST) TO GARDNER ST
SECTION 2025–2113–B
PROJECT NHPP–RAMK(685)
MISCELLANEOUS (BRIDGE NEW STEEL PROCUREMENT)
WILL COUNTY

C–91–141–26

PROJECT IS LOCATED IN THE CITY OF JOLIET

I-80 OVER CHICAGO ST RAMP B,
BNSF RR, UP RR AND GARDNER ST
SN 099-0902 (EASTBOUND)
SN 099-0903 (WESTBOUND)

RANGE 10E, 3RD PRINCIPAL MERIDIAN

PROJECT ENDS
STA. 715+31.15

PROJECT BEGINS
STA. 709+98.23

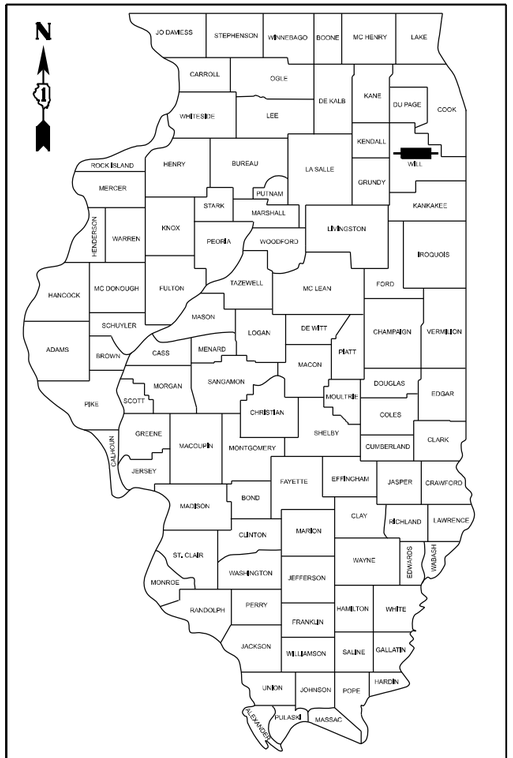

LOCATION OF SECTION INDICATED THUS: –

HNTB CORPORATION

LICENSED STRUCTURAL ENGINEER
Alan P. Cubas
081-008238
STATE OF ILLINOIS

DATE SIGNED: 10/31/2025
ALAN P. CUBAS, P.E., S.E.
NO. 081-008238
EXP. DATE: 11/30/2026

SEAL AND SIGNATURE APPLY TO:
SHEETS 41 - 53

EXP

STATE OF ILLINOIS
MAEN A. FARHAT
081.008545
LICENSED STRUCTURAL ENGINEER

DATE SIGNED: 10/31/2025
MAEN A. FARHAT, PHD, P.E., S.E.
NO. 081-008545
EXP. DATE: 11/30/2026

SEAL AND SIGNATURE APPLY TO:
SHEETS 1 - 40

STATE OF ILLINOIS
DEPARTMENT OF TRANSPORTATION

SUBMITTED October 8 20 25
REGIONAL ENGINEER
December 5 20 25
ENGINEER OF DESIGN AND ENVIRONMENT
December 5 20 25
DIRECTOR OF HIGHWAYS PROJECT IMPLEMENTATION

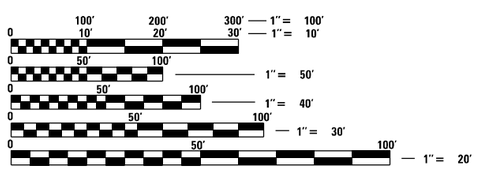

FULL SIZE PLANS HAVE BEEN PREPARED USING STANDARD ENGINEERING SCALES. REDUCED SIZED PLANS WILL NOT CONFORM TO STANDARD SCALES. IN MAKING MEASUREMENTS ON REDUCED PLANS, THE ABOVE SCALES MAY BE USED.

J.U.L.I.E.
JOINT UTILITY LOCATION INFORMATION FOR EXCAVATION
1–800–892–0123
OR 811

IDOT FACILITIES ARE NOT LOCATED BY JULIE OR DIGGER. IDOT ELECTRICAL FACILITIES INCLUDING ROADWAY LIGHTING, FIBER OPTIC, ITS EQUIPMENT, TRAFFIC SIGNAL AND PUMP STATION FACILITIES ARE LOCATED BY THE DEPARTMENT'S ELECTRICAL MAINTENANCE CONTRACTOR. AS OF THE LETTING DATE, CONTACT THE MEADE ELECTRIC COMPANY AT 773–287–7672.

PROJECT ENGINEER: SUNG BYUN (847) 705–4288
PROJECT MANAGER: KIM HARVEY (847) 705–4055

CONTRACT NO. 80C53

LOCATION MAP

SCALE: 1″ = 200′
GROSS LENGTH = 532.92 FT. = 0.10 MILE
NET LENGTH = 532.92 FT. = 0.10 MILE

N

exp. HNTB

PRINTED BY THE AUTHORITY
OF THE STATE OF ILLINOIS

CODE NO.	ITEM DESCRIPTION	UNIT	TOTAL QUANTITY	CONSTRUCTION CODE 90% FEDERAL / 10% STATE BRIDGE 0010 SN 099-0902 AND SN 099-0903
50500205	FURNISHING STRUCTURAL STEEL	L SUM	1	1
52100110	FURNISHING ELASTOMERIC BEARING ASSEMBLY, TYPE I	EACH	44	44
X5050301	STORAGE OF STRUCTURAL STEEL AND BEARINGS - STAGE 1	CAL DA	360	360
X5050302	STORAGE OF STRUCTURAL STEEL AND BEARINGS - STAGE 2	CAL DA	360	360
X5212621	FURNISHING HIGH LOAD MULTI-ROTATIONAL BEARINGS, DISC, GUIDED EXPANSION - 500K	EACH	44	44
Ø Z0076600	TRAINEES	HOUR	1500	1500
Ø Z0076604	TRAINEES - TRAINING PROGRAM GRADUATE	HOUR	1500	1500

* =SPECIALTY ITEMS

INDEX OF SHEETS

Bench Mark: Square on S.E. wingwall of I-80 W.B. bridge S.N. 099-0061, Sta. 709+99.63, 12.99' Lt., Elev. 579.27

Existing Structure: S.N. 099-0060 (EB) and S.N. 099-0061 (WB) were built in 1964 under F.A.I. Route 80 Project I-IG-80-4(35)134, Section 99-4VB. Existing dual structures consist of a seven span structure composed of two three-span units and a single span unit. The reinforced concrete deck is carried by W36 rolled steel beams (composite between piers 3 and 4 and piers 9 and 10 only, supported by pile bent abutments and multi-column concrete piers on steel piles. The approach slabs are supported on timber piles. The EB structure measures 483'-5" back to back of abutments and the WB structure measures 477'-1" back to back of abutments. The out to out deck width is 48'-0" at each structure. The structure will be removed and replaced.

Stage construction will be utilized to maintain traffic during construction.

No salvage

R.R. CLEARANCES TO EXIST. STRUCTURE

Railroad	Track	Horiz. Clr.	Vert. Clr.
BNSF	Future	0"	23'-4"
BNSF	Main 1	13'-3"	23'-4"
BNSF	Main 2	26'-11"	23'-1"
UP RR	West	23'-2"	22'-5"
UP RR	East	8'-10"	22'-3"

APPROVED
For Structural Adequacy Only
Engineer of Bridges & Structures

HNTB CORPORATION
LICENSED STRUCTURAL ENGINEER Alan P. Cubas 081-008238 STATE OF ILLINOIS
DATE SIGNED: 10/31/2025
ALAN P. CUBAS, P.E., S.E.
NO. 081-008238
EXP. DATE: 11/30/2026
SEAL AND SIGNATURE APPLY TO: SHEETS 39 - 51

EXP
STATE OF ILLINOIS MAEN A. FARHAT 081.008545 LICENSED STRUCTURAL ENGINEER
DATE SIGNED: 10/31/2025
MAEN A. FARHAT, PHD, P.E., S.E.
NO. 081-008545
EXP. DATE: 11/30/2026
SEAL AND SIGNATURE APPLY TO: SHEETS 1 - 38

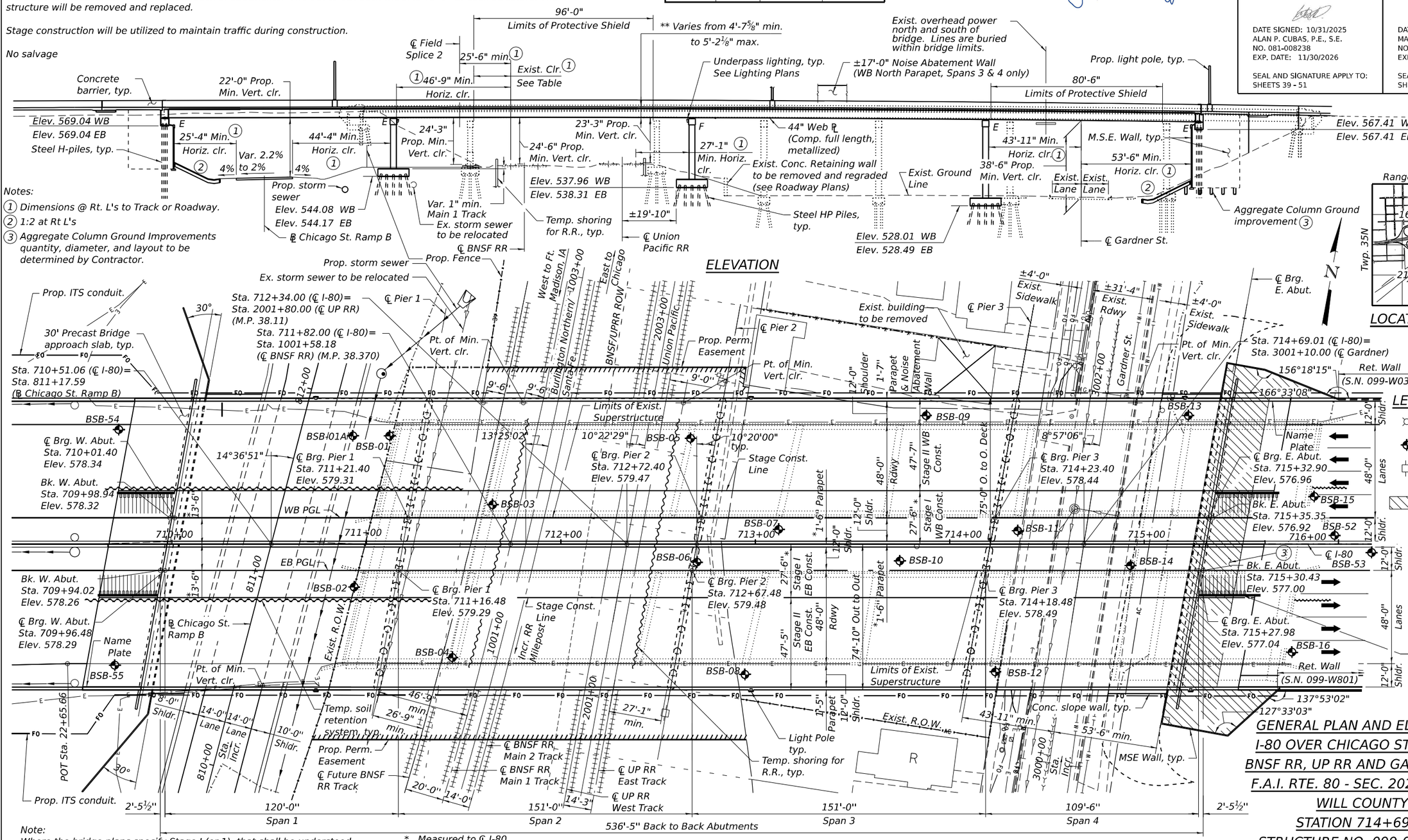

Notes:
(1) Dimensions @ Rt. L's to Track or Roadway.
(2) 1:2 at Rt L's
(3) Aggregate Column Ground Improvements quantity, diameter, and layout to be determined by Contractor.

Note:
Where the bridge plans specify Stage I (or 1), that shall be understood to mean MOT Stage 2A. Where the bridge plans specify Stage II (or 2), that shall be understood to mean MOT Stage 2B.

* Measured to ℄ I-80
** Measured from top of deck to bottom of steel in Span 2

GENERAL PLAN AND ELEVATION
I-80 OVER CHICAGO ST. RAMP B
BNSF RR, UP RR AND GARDNER ST.
F.A.I. RTE. 80 - SEC. 2025-2113-B
WILL COUNTY
STATION 714+69.01
STRUCTURE NO. 099-0902 (EB)
STRUCTURE NO. 099-0903 (WB)

MODEL: SHEET 1
FILE NAME: C:\TRANSYSTEMS\PW_LOCAL\TRANSYSTEMS-PW-01\D0136620\80C53-I80-SHT-003-GPE.DGN
10/29/2025

exp.

USER NAME =	DESIGNED - BAR	REVISED -	
	CHECKED - KK	REVISED -	
PLOT SCALE =	DRAWN - MTR	REVISED -	
PLOT DATE =	CHECKED - BAR	REVISED -	

STATE OF ILLINOIS
DEPARTMENT OF TRANSPORTATION

GENERAL PLAN AND ELEVATION
STRUCTURE NOS. 099-0902 (EB) & 099-0903 (WB)
SHEET S-1 OF S-51 SHEETS

F.A.I. RTE.	SECTION	COUNTY	TOTAL SHEETS	SHEET NO.
80	2025-2113-B	WILL	53	3
		CONTRACT NO. 80C53		
		ILLINOIS	FED. AID PROJECT	

GENERAL NOTES:

1. These plans are for fabrication of the structural steel and bearings. All work shown related to the Beam and Bearing Erection Contract (62F94) is for information only. It is not included in the contract, and is identified as "For Information Only"

2. Fasteners shall be ASTM F 3125 Grade A325 Type 1, mechanically galvanized bolts in painted or coated metallized areas. Bolts ⅞ in. ∅, holes 15/16 in. ∅, unless otherwise noted. See Special Provision for "Metallizing of Structural Steel".

3. Calculated weight of Structural Steel = 3,764,960 lbs AASHTO M270 Grade 50
   = 118,970 lbs AASHTO M270 Grade 36

4. All structural steel shall be metallized. See Special Provision for "Metallizing of Structural Steel".

5. All metallized areas shall be painted with System 1. Exterior fascia girders shall be metallized and shop painted (System 3) as shown on Fascia Girder Painting (System 3) Limits Detail. See special provision for "Metallizing of Structural Steel." The color of the final finish coat of the paint shall be Gray, Munsell No. 5B 7/1.

6. No field welding is permitted except as specified in the contract documents.

7. The structural steel and bearings shall be delivered as noted below to the satisfaction of the Engineer or the scheduled shipping date provided by the erection Contractor per Article 505.09(b) of the IDOT Standard Specifications:

   July 1, 2026 - Girders 8 through 11 (SN 099-0903) and 12 through 15 (SN 099-0902)
   February 1, 2027 - Girders 1 through 7 (SN 099-0903) and 16 though 22 (SN 099-0902)

8. Refer to Article 505.09 of the Standard Specifications for requirements of steel work occurring under a separate contract.

9. Where the bridge plans specify Stage I (or 1), that shall be understood to mean MOT Stage 2A. Where the bridge plans specify Stage II (or 2), that shall be understood to mean MOT Stage 2B.

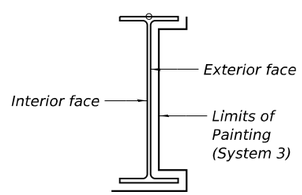

FASCIA GIRDER PAINTING (SYSTEM 3) LIMITS

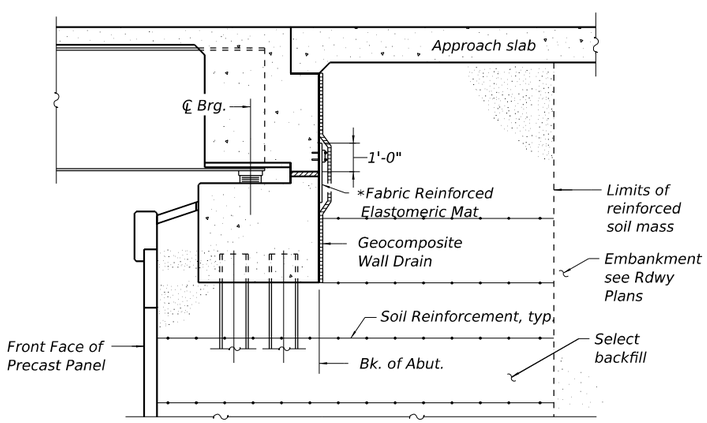

SECTION THRU ABUTMENT

(Horiz. dim. at Rt. ∠'s)
(FOR INFORMATION ONLY)

INDEX OF SHEETS:

DESIGN STRESSES

FIELD UNITS

f'c = 3,500 psi (Substructure)
f'c = 4,000 psi (Superstructure)
f'c = 5,000 psi (Wearing Surface)
f'c = 6,000 psi (Precast Approach Slabs)
f'ci = 5,000 psi (Precast Approach Slabs)
fy = 60,000 psi (Reinforcement)
fy = 50,000 psi (M270 Grade 50)

SEISMIC DATA

Seismic Performance Zone (SPZ) = 1
Design Spectral Acceleration at 1.0 sec. (SD1) = 0.068g
Design Spectral Acceleration at 0.2 sec. (SD1) = 0.125g
Soil Site Class = C

TOTAL BILL OF MATERIAL

ITEM	UNIT	SUPER	SUB	TOTAL
Furnishing Structural Steel	L SUM	1	-	1
Furnishing Elastomeric Bearing Assembly, Type I	EACH	44	-	44
Storage of Structural Steel and Bearings -Stage 1	CAL DA	360	-	360
Storage of Structural Steel and Bearings -Stage 2	CAL DA	360	-	360
Furnishing High Load Multi-rotational Bearings, Disc, Guided Expansion - 500k	EACH	44	-	44

RAILROAD INFORMATION

Railroad Owner	BNSF RR	UP RR
Subdivision	Chillicothe	
Latitude/ Longitude	41°30'43"N 88°04'47"W	41°30'44"N 88°04'46"W
City, State	Joliet, IL	Joliet, IL
Railroad Mile Post	38.370	

LOADING HL-93

Allow 50#/sq. ft. for future wearing surface.

NOISE ABATEMENT WALL LOADING

Factored Strength III or V Wind: 35 psf
Factored Service I Wind: 15 psf
Unfactored Dead Load: 65 psf
Max. Wall Ht. Above T/Parapet = 12'-0"

DESIGN SPECIFICATIONS

2020 AASHTO LRFD Bridge Design Specifications, 9th Edition

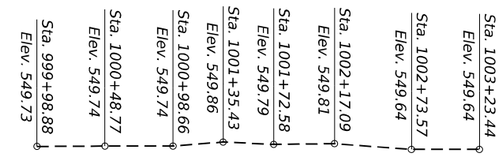

PROFILE GRADE EXIST. BNSF R.R.

(Top of Rail at East Track)

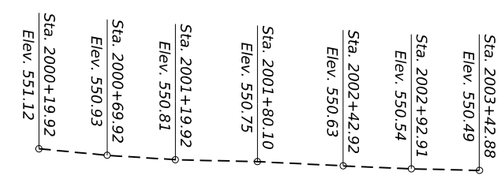

PROFILE GRADE EXIST. UNION PACIFIC R.R.

(Top of Rail at East Track)

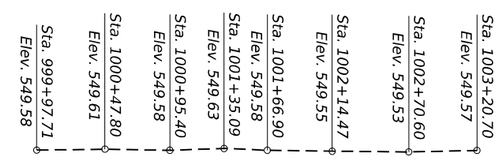

PROFILE GRADE EXIST. BNSF R.R.

(Top of Rail at West Track)

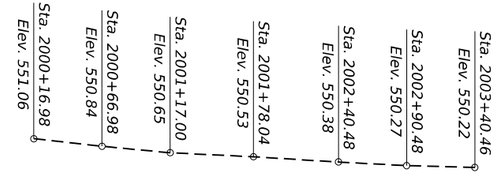

PROFILE GRADE EXIST. UNION PACIFIC R.R.

(Top of Rail at West Track)

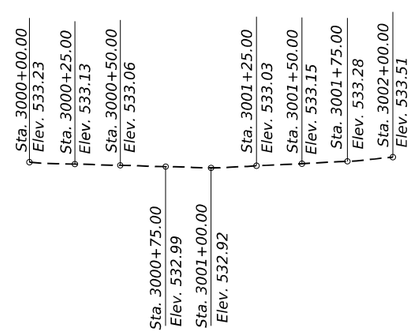

PROFILE GRADE EXIST. GARDNER ST.

(Along ℄ Roadway)

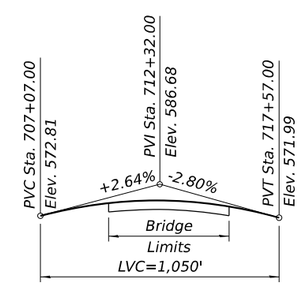

PROFILE GRADE PROP. I-80

(Along PGL of EB & WB Roadway)

Up to ¼" to be ground off the bridge deck and the bridge approach slabs. The Profile Grade shows the final grade after grinding.

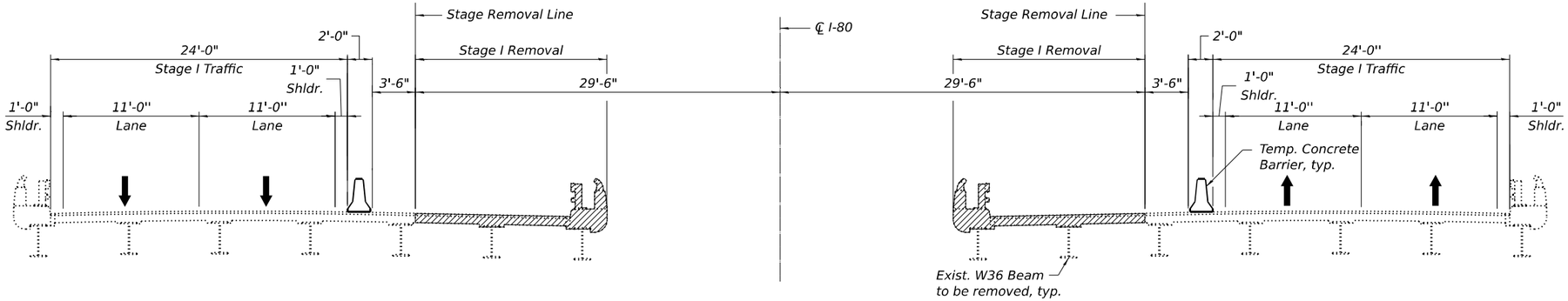

STAGE I REMOVAL

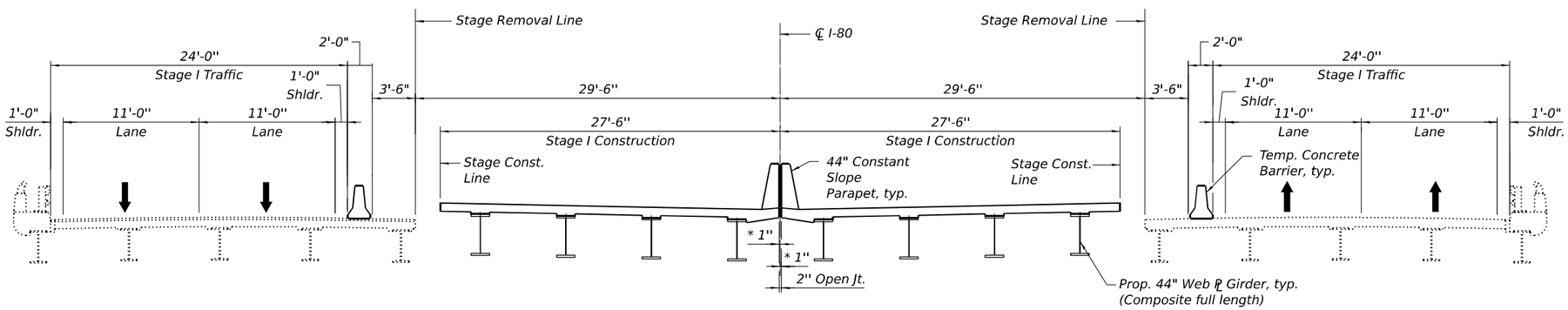

STAGE I CONSTRUCTION

* Measured to ℄ I-80

Notes:

1. All views are looking East.
2. Hatched areas indicates removal of existing structure.
3. All dimensions taken at Rt L's to ℄ I-80 except as noted.

FOR INFORMATION ONLY

MODEL: SHEET
FILE NAME: C:\TRANSYSTEMS\PW_LOCAL\TRANSYSTEMS-PW-01\D0136620\80C53_I80-SHT-005-STG1.DGN

10/28/2025

exp.	USER NAME =	DESIGNED - BAR	REVISED -
		CHECKED - KK	REVISED -
	PLOT SCALE =	DRAWN - MTR	REVISED -
	PLOT DATE =	CHECKED - BAR	REVISED -

STATE OF ILLINOIS
DEPARTMENT OF TRANSPORTATION

CONSTRUCTION STAGING 1
STRUCTURE NOS. 099-0902 (EB) & 099-0903 (WB)

SHEET S-3 OF S-51 SHEETS

F.A.I. RTE.	SECTION	COUNTY	TOTAL SHEETS	SHEET NO.
80	2025-2113-B	WILL	53	5
		CONTRACT NO. 80C53		
		ILLINOIS	FED. AID PROJECT	

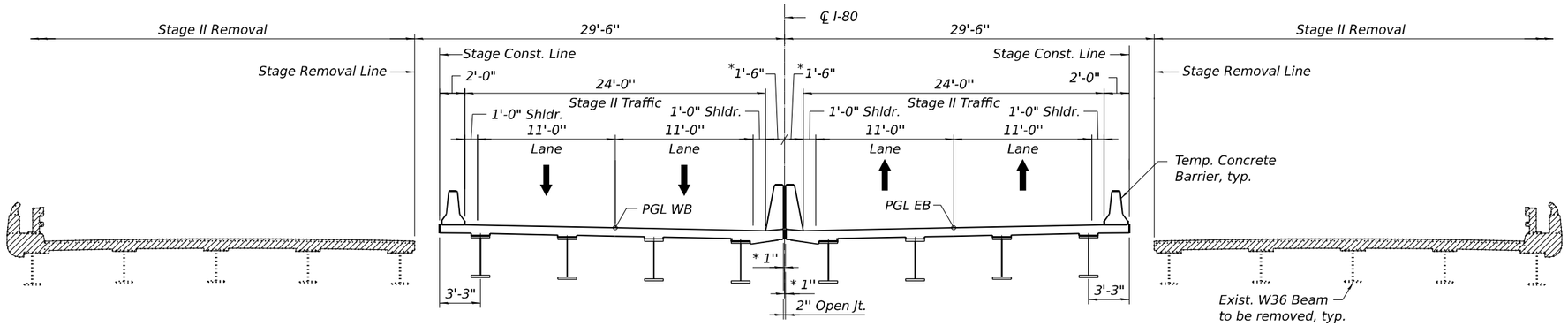

STAGE II REMOVAL

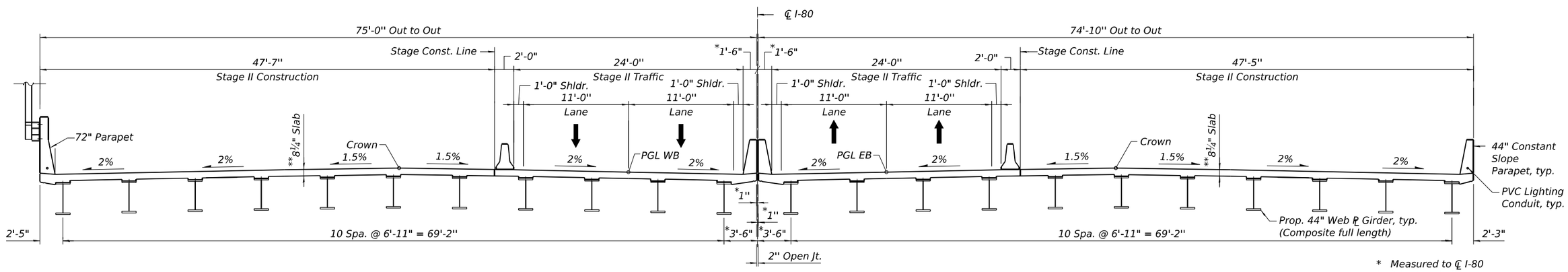

STAGE II CONSTRUCTION

* Measured to ℄ I-80
** Prior to grinding

Notes:

1. All views are looking East.
2. Hatched areas indicates removal of existing structure.
3. All dimensions taken at Rt L's to ℄ I-80 except as noted.

FOR INFORMATION ONLY

MODEL: SHEET
FILE NAME: C:\TRANSYSTEMS\PW_LOCAL\TRANSYSTEMS-PW-01\D0136620\80C53_I80-SHT-006-STG2.DGN
10/28/2025

exp.

USER NAME =	DESIGNED - BAR	REVISED -	
	CHECKED - KK	REVISED -	
PLOT SCALE =	DRAWN - MTR	REVISED -	
PLOT DATE =	CHECKED - BAR	REVISED -	

STATE OF ILLINOIS
DEPARTMENT OF TRANSPORTATION

CONSTRUCTION STAGING 2
STRUCTURE NOS. 099-0902 (EB) & 099-0903 (WB)

SHEET S-4 OF S-51 SHEETS

F.A.I. RTE.	SECTION	COUNTY	TOTAL SHEETS	SHEET NO.
80	2025-2113-B	WILL	53	6
		CONTRACT NO. 80C53		
	ILLINOIS	FED. AID PROJECT		

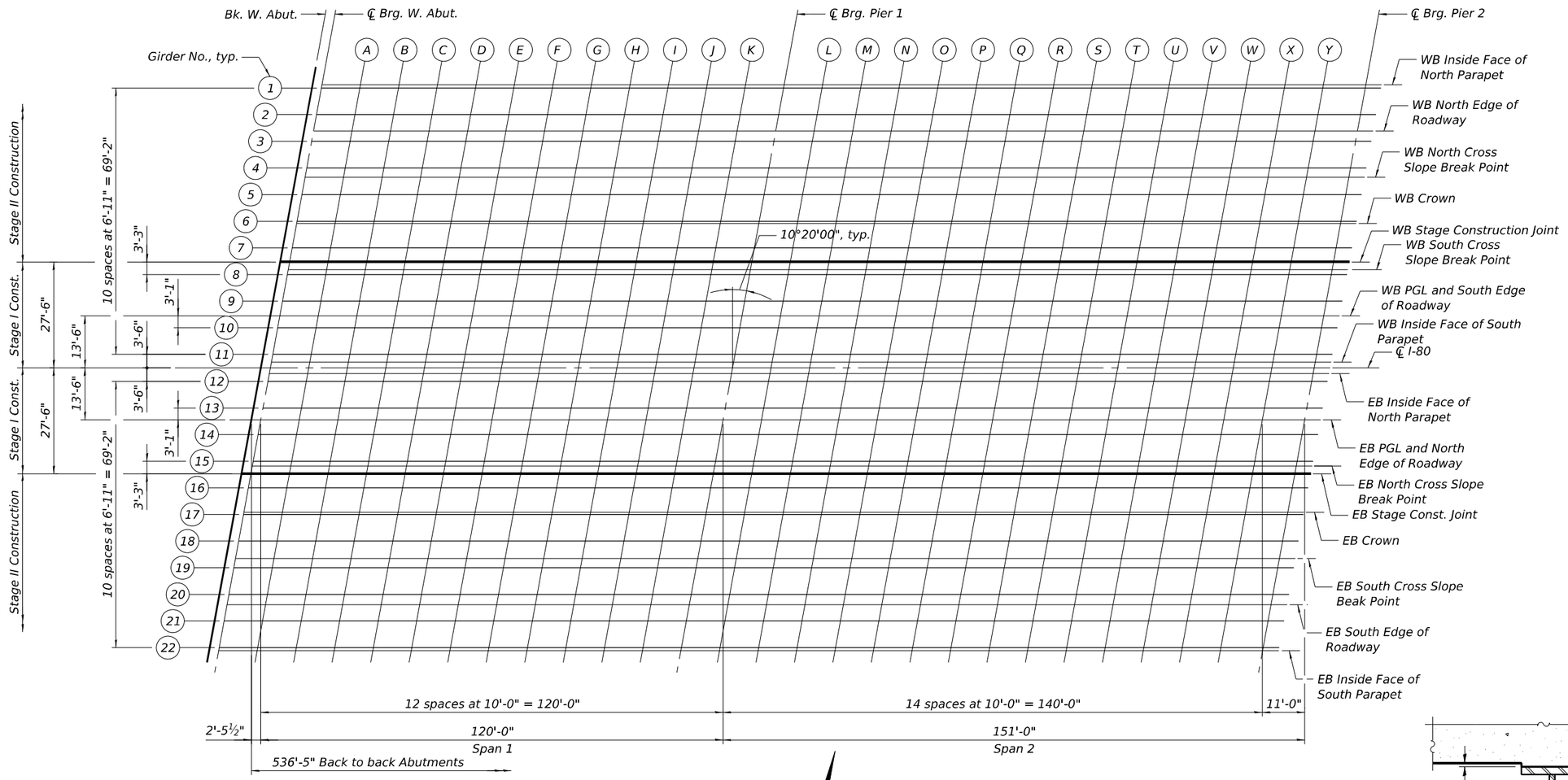

PLAN

N

FOR INFORMATION ONLY

At Minimum Fillet

At Maximum Fillet

To determine "t": After all structural steel has been erected, elevations of the top flanges of the beams shall be taken at intervals shown above and on Sheet S-6. These elevations subtracted from the "Theoretical Grade Elevations Adjusted for Dead Load Deflection and Grinding" shown on Sheets S-7 thru S-20, minus 8¼" deck thickness, equals the fillet heights "t" above top flange of beams. The slab is to be ground after curing to achieve smoothness, but the slab is not to be ground to elevations below the "Theoretical Grade Elevations" shown on Sheets S-7 thru S-20. For grinding the deck, see Special Provisions.

FILLET HEIGHTS

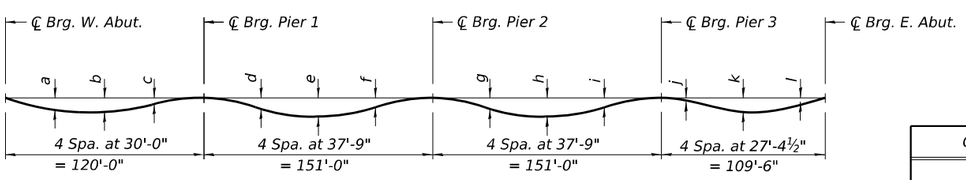

DEAD LOAD DEFLECTION DIAGRAM

(Includes weight of concrete only.)

Note:
The above deflections are not to be used in the field if the engineer is working from the grade elevations adjusted for dead load deflections and grinding as shown on Sheets S-7 thru S-20.

DEAD LOAD DEFLECTION TABLE

Girder No.	a	b	c	d	e	f	g	h	i	j	k	l
1	1 7/8"	2 1/8"	1"	7/8"	1 5/8"	5/8"	1 7/8"	3 1/4"	1 7/8"	1/4"	1 1/8"	1 1/8"
2-3	1 5/8"	1 7/8"	7/8"	3/4"	1 1/2"	5/8"	1 1/2"	2 5/8"	1 1/2"	1/4"	7/8"	7/8"
4-8, 15-19	1 1/4"	1 3/8"	5/8"	3/4"	1 3/8"	3/4"	1"	1 7/8"	1 1/8"	1/4"	3/4"	3/4"
9-10, 13-14, 20-21	1 3/8"	1 5/8"	3/4"	7/8"	1 5/8"	3/4"	1 1/8"	2 1/8"	1 1/4"	1/4"	7/8"	3/4"
11-12	1 5/8"	1 7/8"	3/4"	1"	1 7/8"	7/8"	1 1/4"	2 3/8"	1 3/8"	3/8"	1"	7/8"
22	1 3/8"	1 5/8"	5/8"	7/8"	1 5/8"	3/4"	1 1/8"	2"	1 1/4"	1/4"	7/8"	3/4"

Notes:

1. For Girder Framing Layout, see Sheets S-31 & S-32.

MODEL: SHEET
FILE NAME: C:\TRANSYSTEMS\PW_LOCAL\TRANSYSTEMS-PW-01\D0136620\80C53_I80-SHT-007-TOSPL1.DGN

10/28/2025

exp.

USER NAME =	DESIGNED - CCE	REVISED -	
	CHECKED - BAR	REVISED -	
PLOT SCALE =	DRAWN - MTR	REVISED -	
PLOT DATE =	CHECKED - BAR	REVISED -	

STATE OF ILLINOIS
DEPARTMENT OF TRANSPORTATION

TOP OF SLAB ELEVATIONS LAYOUT 1
STRUCTURE NOS. 099-0902 (EB) & 099-0903 (WB)

SHEET S-5 OF S-51 SHEETS

F.A.I. RTE.	SECTION	COUNTY	TOTAL SHEETS	SHEET NO.
80	2025-2113-B	WILL	53	7
		CONTRACT NO. 80C53		
	ILLINOIS	FED. AID PROJECT		

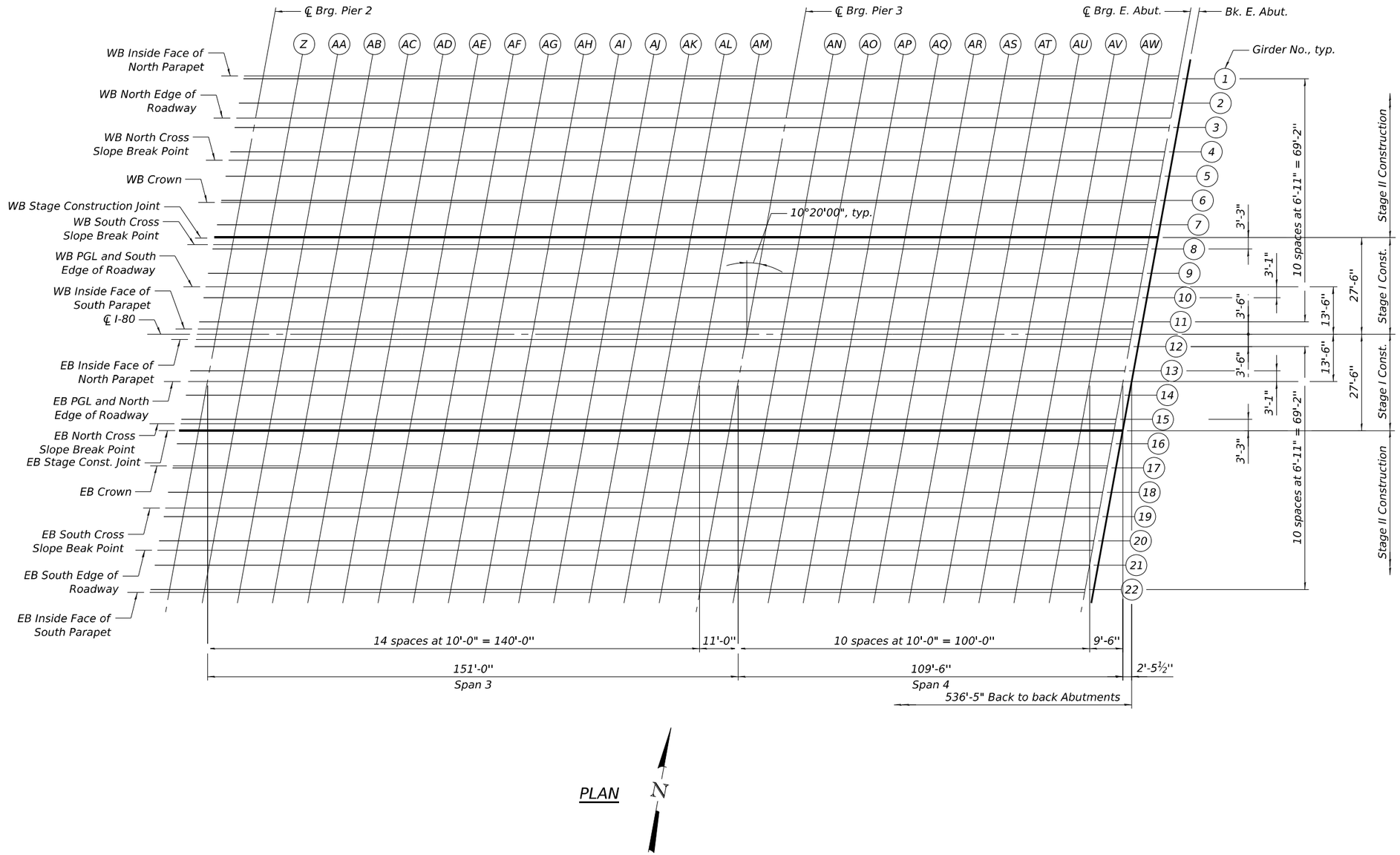

PLAN

N

Notes:

1. For Girder Framing Layout, see Sheets S-31 & S-32.

FOR INFORMATION ONLY

MODEL: SHEET
FILE NAME: C:\TRANSYSTEMS\PW_LOCAL\TRANSYSTEMS-PW-011D0136620\80C53_I80-SHT-008-TOSPL2.DGN

10/28/2025

exp.

USER NAME =	DESIGNED - CCE	REVISED -	
	CHECKED - BAR	REVISED -	
PLOT SCALE =	DRAWN - MTR	REVISED -	
PLOT DATE =	CHECKED - BAR	REVISED -	

STATE OF ILLINOIS
DEPARTMENT OF TRANSPORTATION

TOP OF SLAB ELEVATIONS LAYOUT 2
STRUCTURE NOS. 099-0902 (EB) & 099-0903 (WB)

SHEET S-6 OF S-51 SHEETS

F.A.I. RTE.	SECTION	COUNTY	TOTAL SHEETS	SHEET NO.
80	2025-2113-B	WILL	53	8
		CONTRACT NO. 80C53		
	ILLINOIS	FED. AID PROJECT		

WB INSIDE FACE OF NORTH PARAPET

Location	Station	Offset from ℄ I-80	Theoretical Grade Elevations	Theoretical Grade Elevations Adjusted For Dead Load Deflection & Grinding
Bk. W. Abut.	710+09.88	-73.50	578.20	578.22
℄ Brg. W. Abut.	710+12.34	-73.50	578.22	578.24
A	710+22.34	-73.50	578.33	578.41
B	710+32.34	-73.50	578.42	578.56
C	710+42.34	-73.50	578.52	578.69
D	710+52.34	-73.50	578.60	578.81
E	710+62.34	-73.50	578.69	578.90
F	710+72.34	-73.50	578.76	578.97
G	710+82.34	-73.50	578.84	579.01
H	710+92.34	-73.50	578.90	579.05
I	711+02.34	-73.50	578.97	579.07
J	711+12.34	-73.50	579.02	579.09
K	711+22.34	-73.50	579.07	579.11
℄ Brg. Pier 1	711+32.34	-73.50	579.12	579.14
L	711+42.34	-73.50	579.16	579.19
M	711+52.34	-73.50	579.20	579.24
N	711+62.34	-73.50	579.23	579.30
O	711+72.34	-73.50	579.25	579.36
P	711+82.34	-73.50	579.27	579.40
Q	711+92.34	-73.50	579.29	579.44
R	712+02.34	-73.50	579.30	579.46
S	712+12.34	-73.50	579.31	579.46
T	712+22.34	-73.50	579.31	579.45
U	712+32.34	-73.50	579.30	579.42
V	712+42.34	-73.50	579.29	579.38
W	712+52.34	-73.50	579.27	579.33
X	712+62.34	-73.50	579.25	579.29
Y	712+72.34	-73.50	579.23	579.25
℄ Brg. Pier 2	712+83.34	-73.50	579.19	579.21
Z	712+93.34	-73.50	579.15	579.20
AA	713+03.34	-73.50	579.11	579.20
AB	713+13.34	-73.50	579.07	579.20
AC	713+23.34	-73.50	579.01	579.20
AD	713+33.34	-73.50	578.95	579.19
AE	713+43.34	-73.50	578.89	579.16
AF	713+53.34	-73.50	578.82	579.11
AG	713+63.34	-73.50	578.75	579.04
AH	713+73.34	-73.50	578.67	578.94
AI	713+83.34	-73.50	578.59	578.82
AJ	713+93.34	-73.50	578.50	578.69
AK	714+03.34	-73.50	578.41	578.55
AL	714+13.34	-73.50	578.31	578.40
AM	714+23.34	-73.50	578.20	578.25
℄ Brg. Pier 3	714+34.34	-73.50	578.08	578.10
AN	714+44.34	-73.50	577.97	577.98
AO	714+54.34	-73.50	577.85	577.88
AP	714+64.34	-73.50	577.72	577.77
AQ	714+74.34	-73.50	577.59	577.67
AR	714+84.34	-73.50	577.45	577.56
AS	714+94.34	-73.50	577.31	577.43
AT	715+04.34	-73.50	577.17	577.29
AU	715+14.34	-73.50	577.01	577.13
AV	715+24.34	-73.50	576.86	576.95
AW	715+34.34	-73.50	576.70	576.76
℄ Brg. E. Abut.	715+43.84	-73.50	576.54	576.56
Bk. E. Abut.	715+46.29	-73.50	576.50	576.52

GIRDER 1

Location	Station	Offset from ℄ I-80	Theoretical Grade Elevations	Theoretical Grade Elevations Adjusted For Dead Load Deflection & Grinding
Bk. W. Abut.	710+09.73	-72.67	578.21	578.23
℄ Brg. W. Abut.	710+12.19	-72.67	578.24	578.26
A	710+22.19	-72.67	578.34	578.42
B	710+32.19	-72.67	578.44	578.57
C	710+42.19	-72.67	578.53	578.71
D	710+52.19	-72.67	578.62	578.82
E	710+62.19	-72.67	578.70	578.91
F	710+72.19	-72.67	578.78	578.98
G	710+82.19	-72.67	578.85	579.03
H	710+92.19	-72.67	578.92	579.06
I	711+02.19	-72.67	578.98	579.09
J	711+12.19	-72.67	579.04	579.10
K	711+22.19	-72.67	579.09	579.13
℄ Brg. Pier 1	711+32.19	-72.67	579.14	579.16
L	711+42.19	-72.67	579.18	579.20
M	711+52.19	-72.67	579.21	579.26
N	711+62.19	-72.67	579.24	579.32
O	711+72.19	-72.67	579.27	579.37
P	711+82.19	-72.67	579.29	579.42
Q	711+92.19	-72.67	579.31	579.46
R	712+02.19	-72.67	579.32	579.48
S	712+12.19	-72.67	579.32	579.48
T	712+22.19	-72.67	579.32	579.46
U	712+32.19	-72.67	579.32	579.43
V	712+42.19	-72.67	579.31	579.39
W	712+52.19	-72.67	579.29	579.35
X	712+62.19	-72.67	579.27	579.30
Y	712+72.19	-72.67	579.24	579.26
℄ Brg. Pier 2	712+83.19	-72.67	579.21	579.23
Z	712+93.19	-72.67	579.17	579.22
AA	713+03.19	-72.67	579.13	579.22
AB	713+13.19	-72.67	579.08	579.22
AC	713+23.19	-72.67	579.03	579.22
AD	713+33.19	-72.67	578.97	579.20
AE	713+43.19	-72.67	578.91	579.18
AF	713+53.19	-72.67	578.84	579.13
AG	713+63.19	-72.67	578.77	579.06
AH	713+73.19	-72.67	578.69	578.96
AI	713+83.19	-72.67	578.61	578.84
AJ	713+93.19	-72.67	578.52	578.71
AK	714+03.19	-72.67	578.42	578.56
AL	714+13.19	-72.67	578.32	578.41
AM	714+23.19	-72.67	578.22	578.27
℄ Brg. Pier 3	714+34.19	-72.67	578.10	578.12
AN	714+44.19	-72.67	577.98	578.00
AO	714+54.19	-72.67	577.86	577.89
AP	714+64.19	-72.67	577.74	577.79
AQ	714+74.19	-72.67	577.61	577.69
AR	714+84.19	-72.67	577.47	577.58
AS	714+94.19	-72.67	577.33	577.45
AT	715+04.19	-72.67	577.18	577.31
AU	715+14.19	-72.67	577.03	577.15
AV	715+24.19	-72.67	576.88	576.97
AW	715+34.19	-72.67	576.72	576.77
℄ Brg. E. Abut.	715+43.69	-72.67	576.56	576.58
Bk. E. Abut.	715+46.14	-72.67	576.51	576.54

GIRDER 2

Location	Station	Offset from ℄ I-80	Theoretical Grade Elevations	Theoretical Grade Elevations Adjusted For Dead Load Deflection & Grinding
Bk. W. Abut.	710+08.47	-65.75	578.34	578.36
℄ Brg. W. Abut.	710+10.93	-65.75	578.36	578.38
A	710+20.93	-65.75	578.47	578.54
B	710+30.93	-65.75	578.56	578.68
C	710+40.93	-65.75	578.66	578.81
D	710+50.93	-65.75	578.75	578.92
E	710+60.93	-65.75	578.83	579.01
F	710+70.93	-65.75	578.91	579.08
G	710+80.93	-65.75	578.98	579.14
H	710+90.93	-65.75	579.05	579.17
I	711+00.93	-65.75	579.11	579.20
J	711+10.93	-65.75	579.17	579.23
K	711+20.93	-65.75	579.22	579.26
℄ Brg. Pier 1	711+30.93	-65.75	579.27	579.29
L	711+40.93	-65.75	579.31	579.34
M	711+50.93	-65.75	579.35	579.39
N	711+60.93	-65.75	579.38	579.44
O	711+70.93	-65.75	579.41	579.50
P	711+80.93	-65.75	579.43	579.54
Q	711+90.93	-65.75	579.44	579.58
R	712+00.93	-65.75	579.45	579.60
S	712+10.93	-65.75	579.46	579.60
T	712+20.93	-65.75	579.46	579.59
U	712+30.93	-65.75	579.46	579.56
V	712+40.93	-65.75	579.45	579.53
W	712+50.93	-65.75	579.43	579.49
X	712+60.93	-65.75	579.41	579.45
Y	712+70.93	-65.75	579.39	579.41
℄ Brg. Pier 2	712+81.93	-65.75	579.35	579.37
Z	712+91.93	-65.75	579.32	579.36
AA	713+01.93	-65.75	579.27	579.35
AB	713+11.93	-65.75	579.23	579.34
AC	713+21.93	-65.75	579.18	579.33
AD	713+31.93	-65.75	579.12	579.31
AE	713+41.93	-65.75	579.06	579.28
AF	713+51.93	-65.75	578.99	579.23
AG	713+61.93	-65.75	578.92	579.16
AH	713+71.93	-65.75	578.84	579.07
AI	713+81.93	-65.75	578.76	578.95
AJ	713+91.93	-65.75	578.67	578.83
AK	714+01.93	-65.75	578.57	578.69
AL	714+11.93	-65.75	578.48	578.55
AM	714+21.93	-65.75	578.37	578.42
℄ Brg. Pier 3	714+32.93	-65.75	578.25	578.27
AN	714+42.93	-65.75	578.14	578.16
AO	714+52.93	-65.75	578.02	578.05
AP	714+62.93	-65.75	577.89	577.94
AQ	714+72.93	-65.75	577.76	577.83
AR	714+82.93	-65.75	577.63	577.72
AS	714+92.93	-65.75	577.49	577.59
AT	715+02.93	-65.75	577.34	577.45
AU	715+12.93	-65.75	577.19	577.29
AV	715+22.93	-65.75	577.04	577.12
AW	715+32.93	-65.75	576.87	576.93
℄ Brg. E. Abut.	715+42.43	-65.75	576.72	576.74
Bk. E. Abut.	715+44.88	-65.75	576.67	576.70

Notes:

All Elevations and Offsets are in feet.

FOR INFORMATION ONLY

MODEL: SHEET
FILE NAME: C:\TRANSYSTEMS\PW_LOCAL\TRANSYSTEMS-PW-01\D0136620\80C53_I80-SHT-009-TOS1.DGN

10/28/2025

exp.

USER NAME =	DESIGNED - CCE	REVISED -	
	CHECKED - VCP	REVISED -	
PLOT SCALE =	DRAWN - MTR	REVISED -	
PLOT DATE =	CHECKED - CCE	REVISED -	

STATE OF ILLINOIS
DEPARTMENT OF TRANSPORTATION

TOP OF SLAB ELEVATIONS 1
STRUCTURE NO. 099-0903 (WB)

SHEET S-7 OF S-51 SHEETS

F.A.I. RTE.	SECTION	COUNTY	TOTAL SHEETS	SHEET NO.
80	2025-2113-B	WILL	53	9
		CONTRACT NO. 80C53		
	ILLINOIS	FED. AID PROJECT		

WB NORTH EDGE OF ROADWAY

Location	Station	Offset from ℄ I-80	Theoretical Grade Elevations	Theoretical Grade Elevations Adjusted For Dead Load Deflection & Grinding
Bk. W. Abut.	710+07.69	-61.50	578.41	578.43
℄ Brg. W. Abut.	710+10.15	-61.50	578.44	578.46
A	710+20.15	-61.50	578.54	578.62
B	710+30.15	-61.50	578.64	578.76
C	710+40.15	-61.50	578.74	578.89
D	710+50.15	-61.50	578.83	579.00
E	710+60.15	-61.50	578.91	579.09
F	710+70.15	-61.50	578.99	579.16
G	710+80.15	-61.50	579.06	579.22
H	710+90.15	-61.50	579.13	579.25
I	711+00.15	-61.50	579.19	579.28
J	711+10.15	-61.50	579.25	579.31
K	711+20.15	-61.50	579.30	579.34
℄ Brg. Pier 1	711+30.15	-61.50	579.35	579.37
L	711+40.15	-61.50	579.39	579.42
M	711+50.15	-61.50	579.43	579.47
N	711+60.15	-61.50	579.46	579.53
O	711+70.15	-61.50	579.49	579.58
P	711+80.15	-61.50	579.51	579.63
Q	711+90.15	-61.50	579.53	579.66
R	712+00.15	-61.50	579.54	579.68
S	712+10.15	-61.50	579.54	579.69
T	712+20.15	-61.50	579.55	579.68
U	712+30.15	-61.50	579.54	579.65
V	712+40.15	-61.50	579.53	579.61
W	712+50.15	-61.50	579.52	579.57
X	712+60.15	-61.50	579.50	579.53
Y	712+70.15	-61.50	579.47	579.49
℄ Brg. Pier 2	712+81.15	-61.50	579.44	579.46
Z	712+91.15	-61.50	579.40	579.45
AA	713+01.15	-61.50	579.36	579.43
AB	713+11.15	-61.50	579.32	579.43
AC	713+21.15	-61.50	579.26	579.42
AD	713+31.15	-61.50	579.21	579.40
AE	713+41.15	-61.50	579.15	579.37
AF	713+51.15	-61.50	579.08	579.32
AG	713+61.15	-61.50	579.01	579.25
AH	713+71.15	-61.50	578.93	579.16
AI	713+81.15	-61.50	578.85	579.05
AJ	713+91.15	-61.50	578.76	578.92
AK	714+01.15	-61.50	578.67	578.79
AL	714+11.15	-61.50	578.57	578.65
AM	714+21.15	-61.50	578.47	578.51
℄ Brg. Pier 3	714+32.15	-61.50	578.35	578.37
AN	714+42.15	-61.50	578.23	578.25
AO	714+52.15	-61.50	578.11	578.14
AP	714+62.15	-61.50	577.99	578.03
AQ	714+72.15	-61.50	577.86	577.93
AR	714+82.15	-61.50	577.72	577.81
AS	714+92.15	-61.50	577.58	577.69
AT	715+02.15	-61.50	577.44	577.55
AU	715+12.15	-61.50	577.29	577.39
AV	715+22.15	-61.50	577.13	577.21
AW	715+32.15	-61.50	576.97	577.02
℄ Brg. E. Abut.	715+41.65	-61.50	576.81	576.84
Bk. E. Abut.	715+44.11	-61.50	576.77	576.79

GIRDER 3

Location	Station	Offset from ℄ I-80	Theoretical Grade Elevations	Theoretical Grade Elevations Adjusted For Dead Load Deflection & Grinding
Bk. W. Abut.	710+07.21	-58.83	578.46	578.48
℄ Brg. W. Abut.	710+09.66	-58.83	578.49	578.51
A	710+19.66	-58.83	578.59	578.66
B	710+29.66	-58.83	578.69	578.81
C	710+39.66	-58.83	578.79	578.94
D	710+49.66	-58.83	578.87	579.05
E	710+59.66	-58.83	578.96	579.14
F	710+69.66	-58.83	579.04	579.21
G	710+79.66	-58.83	579.11	579.27
H	710+89.66	-58.83	579.18	579.30
I	710+99.66	-58.83	579.24	579.33
J	711+09.66	-58.83	579.30	579.36
K	711+19.66	-58.83	579.35	579.39
℄ Brg. Pier 1	711+29.66	-58.83	579.40	579.42
L	711+39.66	-58.83	579.44	579.47
M	711+49.66	-58.83	579.48	579.52
N	711+59.66	-58.83	579.51	579.58
O	711+69.66	-58.83	579.54	579.63
P	711+79.66	-58.83	579.56	579.68
Q	711+89.66	-58.83	579.58	579.72
R	711+99.66	-58.83	579.59	579.74
S	712+09.66	-58.83	579.60	579.74
T	712+19.66	-58.83	579.60	579.73
U	712+29.66	-58.83	579.60	579.70
V	712+39.66	-58.83	579.59	579.67
W	712+49.66	-58.83	579.57	579.63
X	712+59.66	-58.83	579.55	579.59
Y	712+69.66	-58.83	579.53	579.55
℄ Brg. Pier 2	712+80.66	-58.83	579.49	579.51
Z	712+90.66	-58.83	579.46	579.50
AA	713+00.66	-58.83	579.42	579.49
AB	713+10.66	-58.83	579.37	579.48
AC	713+20.66	-58.83	579.32	579.48
AD	713+30.66	-58.83	579.26	579.46
AE	713+40.66	-58.83	579.20	579.43
AF	713+50.66	-58.83	579.14	579.38
AG	713+60.66	-58.83	579.06	579.30
AH	713+70.66	-58.83	578.99	579.21
AI	713+80.66	-58.83	578.90	579.10
AJ	713+90.66	-58.83	578.82	578.98
AK	714+00.66	-58.83	578.72	578.84
AL	714+10.66	-58.83	578.63	578.70
AM	714+20.66	-58.83	578.52	578.57
℄ Brg. Pier 3	714+31.66	-58.83	578.40	578.43
AN	714+41.66	-58.83	578.29	578.31
AO	714+51.66	-58.83	578.17	578.20
AP	714+61.66	-58.83	578.05	578.09
AQ	714+71.66	-58.83	577.92	577.99
AR	714+81.66	-58.83	577.78	577.87
AS	714+91.66	-58.83	577.64	577.75
AT	715+01.66	-58.83	577.50	577.61
AU	715+11.66	-58.83	577.35	577.45
AV	715+21.66	-58.83	577.19	577.27
AW	715+31.66	-58.83	577.03	577.09
℄ Brg. E. Abut.	715+41.16	-58.83	576.88	576.90
Bk. E. Abut.	715+43.62	-58.83	576.83	576.86

GIRDER 4

Location	Station	Offset from ℄ I-80	Theoretical Grade Elevations	Theoretical Grade Elevations Adjusted For Dead Load Deflection & Grinding
Bk. W. Abut.	710+05.95	-51.92	578.58	578.61
℄ Brg. W. Abut.	710+08.40	-51.92	578.61	578.63
A	710+18.40	-51.92	578.72	578.78
B	710+28.40	-51.92	578.82	578.91
C	710+38.40	-51.92	578.91	579.04
D	710+48.40	-51.92	579.00	579.14
E	710+58.40	-51.92	579.09	579.23
F	710+68.40	-51.92	579.17	579.31
G	710+78.40	-51.92	579.24	579.36
H	710+88.40	-51.92	579.31	579.41
I	710+98.40	-51.92	579.37	579.45
J	711+08.40	-51.92	579.43	579.48
K	711+18.40	-51.92	579.49	579.52
℄ Brg. Pier 1	711+28.40	-51.92	579.53	579.56
L	711+38.40	-51.92	579.58	579.61
M	711+48.40	-51.92	579.62	579.66
N	711+58.40	-51.92	579.65	579.71
O	711+68.40	-51.92	579.68	579.76
P	711+78.40	-51.92	579.70	579.81
Q	711+88.40	-51.92	579.72	579.84
R	711+98.40	-51.92	579.73	579.86
S	712+08.40	-51.92	579.74	579.87
T	712+18.40	-51.92	579.74	579.86
U	712+28.40	-51.92	579.73	579.84
V	712+38.40	-51.92	579.73	579.81
W	712+48.40	-51.92	579.71	579.77
X	712+58.40	-51.92	579.69	579.74
Y	712+68.40	-51.92	579.67	579.70
℄ Brg. Pier 2	712+79.40	-51.92	579.64	579.66
Z	712+89.40	-51.92	579.60	579.63
AA	712+99.40	-51.92	579.56	579.61
AB	713+09.40	-51.92	579.52	579.59
AC	713+19.40	-51.92	579.47	579.57
AD	713+29.40	-51.92	579.41	579.55
AE	713+39.40	-51.92	579.35	579.51
AF	713+49.40	-51.92	579.28	579.45
AG	713+59.40	-51.92	579.21	579.38
AH	713+69.40	-51.92	579.14	579.30
AI	713+79.40	-51.92	579.05	579.20
AJ	713+89.40	-51.92	578.97	579.09
AK	713+99.40	-51.92	578.87	578.97
AL	714+09.40	-51.92	578.78	578.84
AM	714+19.40	-51.92	578.68	578.71
℄ Brg. Pier 3	714+30.40	-51.92	578.56	578.58
AN	714+40.40	-51.92	578.44	578.46
AO	714+50.40	-51.92	578.33	578.36
AP	714+60.40	-51.92	578.20	578.25
AQ	714+70.40	-51.92	578.07	578.14
AR	714+80.40	-51.92	577.94	578.02
AS	714+90.40	-51.92	577.80	577.89
AT	715+00.40	-51.92	577.66	577.75
AU	715+10.40	-51.92	577.51	577.59
AV	715+20.40	-51.92	577.35	577.42
AW	715+30.40	-51.92	577.19	577.24
℄ Brg. E. Abut.	715+39.90	-51.92	577.04	577.06
Bk. E. Abut.	715+42.36	-51.92	576.99	577.01

Notes:

All Elevations and Offsets are in feet.

FOR INFORMATION ONLY

MODEL: SHEET
FILE NAME: C:\TRANSYSTEMS\PW_LOCAL\TRANSYSTEMS-PW-01\D0136620\80C53_I80-SHT-010-TOS2.DGN

10/28/2025

exp.

USER NAME =	DESIGNED - CCE	REVISED -	
	CHECKED - VCP	REVISED -	
PLOT SCALE =	DRAWN - MTR	REVISED -	
PLOT DATE =	CHECKED - CCE	REVISED -	

STATE OF ILLINOIS
DEPARTMENT OF TRANSPORTATION

TOP OF SLAB ELEVATIONS 2
STRUCTURE NO. 099-0903 (WB)

SHEET S-8 OF S-51 SHEETS

F.A.I. RTE.	SECTION	COUNTY	TOTAL SHEETS	SHEET NO.
80	2025-2113-B	WILL	53	10
		CONTRACT NO. 80C53		
	ILLINOIS	FED. AID PROJECT		

WB NORTH CROSS SLOPE BREAK POINT

Location	Station	Offset from ℄ I-80	Theoretical Grade Elevations	Theoretical Grade Elevations Adjusted For Dead Load Deflection & Grinding
Bk. W. Abut.	710+05.51	-49.50	578.63	578.65
℄ Brg. W. Abut.	710+07.96	-49.50	578.65	578.68
A	710+17.96	-49.50	578.76	578.82
B	710+27.96	-49.50	578.86	578.96
C	710+37.96	-49.50	578.96	579.08
D	710+47.96	-49.50	579.05	579.19
E	710+57.96	-49.50	579.13	579.28
F	710+67.96	-49.50	579.21	579.35
G	710+77.96	-49.50	579.29	579.41
H	710+87.96	-49.50	579.36	579.45
I	710+97.96	-49.50	579.42	579.49
J	711+07.96	-49.50	579.48	579.53
K	711+17.96	-49.50	579.53	579.56
℄ Brg. Pier 1	711+27.96	-49.50	579.58	579.60
L	711+37.96	-49.50	579.62	579.65
M	711+47.96	-49.50	579.66	579.70
N	711+57.96	-49.50	579.70	579.76
O	711+67.96	-49.50	579.72	579.81
P	711+77.96	-49.50	579.75	579.86
Q	711+87.96	-49.50	579.76	579.89
R	711+97.96	-49.50	579.78	579.91
S	712+07.96	-49.50	579.78	579.92
T	712+17.96	-49.50	579.79	579.91
U	712+27.96	-49.50	579.78	579.89
V	712+37.96	-49.50	579.77	579.86
W	712+47.96	-49.50	579.76	579.82
X	712+57.96	-49.50	579.74	579.78
Y	712+67.96	-49.50	579.72	579.75
℄ Brg. Pier 2	712+78.96	-49.50	579.69	579.71
Z	712+88.96	-49.50	579.65	579.68
AA	712+98.96	-49.50	579.61	579.66
AB	713+08.96	-49.50	579.57	579.64
AC	713+18.96	-49.50	579.52	579.62
AD	713+28.96	-49.50	579.46	579.60
AE	713+38.96	-49.50	579.40	579.56
AF	713+48.96	-49.50	579.33	579.50
AG	713+58.96	-49.50	579.26	579.44
AH	713+68.96	-49.50	579.19	579.35
AI	713+78.96	-49.50	579.11	579.25
AJ	713+88.96	-49.50	579.02	579.14
AK	713+98.96	-49.50	578.93	579.02
AL	714+08.96	-49.50	578.83	578.89
AM	714+18.96	-49.50	578.73	578.77
℄ Brg. Pier 3	714+29.96	-49.50	578.61	578.63
AN	714+39.96	-49.50	578.50	578.52
AO	714+49.96	-49.50	578.38	578.41
AP	714+59.96	-49.50	578.26	578.30
AQ	714+69.96	-49.50	578.13	578.19
AR	714+79.96	-49.50	577.99	578.07
AS	714+89.96	-49.50	577.85	577.94
AT	714+99.96	-49.50	577.71	577.80
AU	715+09.96	-49.50	577.56	577.64
AV	715+19.96	-49.50	577.41	577.47
AW	715+29.96	-49.50	577.25	577.29
℄ Brg. E. Abut.	715+39.46	-49.50	577.09	577.11
Bk. E. Abut.	715+41.92	-49.50	577.05	577.07

GIRDER 5

Location	Station	Offset from ℄ I-80	Theoretical Grade Elevations	Theoretical Grade Elevations Adjusted For Dead Load Deflection & Grinding
Bk. W. Abut.	710+04.69	-45.00	578.69	578.71
℄ Brg. W. Abut.	710+07.14	-45.00	578.71	578.73
A	710+17.14	-45.00	578.82	578.88
B	710+27.14	-45.00	578.92	579.02
C	710+37.14	-45.00	579.02	579.14
D	710+47.14	-45.00	579.11	579.25
E	710+57.14	-45.00	579.19	579.34
F	710+67.14	-45.00	579.27	579.41
G	710+77.14	-45.00	579.35	579.47
H	710+87.14	-45.00	579.42	579.52
I	710+97.14	-45.00	579.48	579.55
J	711+07.14	-45.00	579.54	579.59
K	711+17.14	-45.00	579.60	579.63
℄ Brg. Pier 1	711+27.14	-45.00	579.64	579.67
L	711+37.14	-45.00	579.69	579.72
M	711+47.14	-45.00	579.73	579.77
N	711+57.14	-45.00	579.76	579.82
O	711+67.14	-45.00	579.79	579.88
P	711+77.14	-45.00	579.81	579.92
Q	711+87.14	-45.00	579.83	579.96
R	711+97.14	-45.00	579.84	579.98
S	712+07.14	-45.00	579.85	579.99
T	712+17.14	-45.00	579.85	579.98
U	712+27.14	-45.00	579.85	579.96
V	712+37.14	-45.00	579.84	579.93
W	712+47.14	-45.00	579.83	579.89
X	712+57.14	-45.00	579.81	579.85
Y	712+67.14	-45.00	579.79	579.82
℄ Brg. Pier 2	712+78.14	-45.00	579.76	579.78
Z	712+88.14	-45.00	579.72	579.75
AA	712+98.14	-45.00	579.68	579.73
AB	713+08.14	-45.00	579.64	579.72
AC	713+18.14	-45.00	579.59	579.70
AD	713+28.14	-45.00	579.53	579.67
AE	713+38.14	-45.00	579.47	579.63
AF	713+48.14	-45.00	579.41	579.58
AG	713+58.14	-45.00	579.34	579.51
AH	713+68.14	-45.00	579.26	579.43
AI	713+78.14	-45.00	579.18	579.33
AJ	713+88.14	-45.00	579.09	579.21
AK	713+98.14	-45.00	579.00	579.09
AL	714+08.14	-45.00	578.91	578.97
AM	714+18.14	-45.00	578.80	578.84
℄ Brg. Pier 3	714+29.14	-45.00	578.69	578.71
AN	714+39.14	-45.00	578.57	578.60
AO	714+49.14	-45.00	578.46	578.49
AP	714+59.14	-45.00	578.33	578.38
AQ	714+69.14	-45.00	578.21	578.27
AR	714+79.14	-45.00	578.07	578.15
AS	714+89.14	-45.00	577.93	578.02
AT	714+99.14	-45.00	577.79	577.88
AU	715+09.14	-45.00	577.64	577.72
AV	715+19.14	-45.00	577.49	577.55
AW	715+29.14	-45.00	577.33	577.37
℄ Brg. E. Abut.	715+38.64	-45.00	577.17	577.19
Bk. E. Abut.	715+41.10	-45.00	577.13	577.15

GIRDER 6

Location	Station	Offset from ℄ I-80	Theoretical Grade Elevations	Theoretical Grade Elevations Adjusted For Dead Load Deflection & Grinding
Bk. W. Abut.	710+03.42	-38.08	578.78	578.80
℄ Brg. W. Abut.	710+05.88	-38.08	578.80	578.82
A	710+15.88	-38.08	578.91	578.97
B	710+25.88	-38.08	579.01	579.11
C	710+35.88	-38.08	579.11	579.23
D	710+45.88	-38.08	579.20	579.34
E	710+55.88	-38.08	579.29	579.43
F	710+65.88	-38.08	579.37	579.51
G	710+75.88	-38.08	579.44	579.56
H	710+85.88	-38.08	579.51	579.61
I	710+95.88	-38.08	579.58	579.65
J	711+05.88	-38.08	579.64	579.69
K	711+15.88	-38.08	579.69	579.72
℄ Brg. Pier 1	711+25.88	-38.08	579.74	579.76
L	711+35.88	-38.08	579.79	579.81
M	711+45.88	-38.08	579.83	579.87
N	711+55.88	-38.08	579.86	579.92
O	711+65.88	-38.08	579.89	579.98
P	711+75.88	-38.08	579.91	580.02
Q	711+85.88	-38.08	579.93	580.06
R	711+95.88	-38.08	579.95	580.08
S	712+05.88	-38.08	579.95	580.09
T	712+15.88	-38.08	579.96	580.08
U	712+25.88	-38.08	579.96	580.06
V	712+35.88	-38.08	579.95	580.03
W	712+45.88	-38.08	579.94	580.00
X	712+55.88	-38.08	579.92	579.96
Y	712+65.88	-38.08	579.90	579.92
℄ Brg. Pier 2	712+76.88	-38.08	579.86	579.88
Z	712+86.88	-38.08	579.83	579.86
AA	712+96.88	-38.08	579.79	579.84
AB	713+06.88	-38.08	579.75	579.83
AC	713+16.88	-38.08	579.70	579.81
AD	713+26.88	-38.08	579.64	579.78
AE	713+36.88	-38.08	579.58	579.74
AF	713+46.88	-38.08	579.52	579.69
AG	713+56.88	-38.08	579.45	579.62
AH	713+66.88	-38.08	579.37	579.54
AI	713+76.88	-38.08	579.29	579.44
AJ	713+86.88	-38.08	579.21	579.33
AK	713+96.88	-38.08	579.12	579.21
AL	714+06.88	-38.08	579.02	579.08
AM	714+16.88	-38.08	578.92	578.96
℄ Brg. Pier 3	714+27.88	-38.08	578.80	578.83
AN	714+37.88	-38.08	578.69	578.71
AO	714+47.88	-38.08	578.58	578.61
AP	714+57.88	-38.08	578.45	578.50
AQ	714+67.88	-38.08	578.33	578.39
AR	714+77.88	-38.08	578.19	578.27
AS	714+87.88	-38.08	578.06	578.14
AT	714+97.88	-38.08	577.91	578.00
AU	715+07.88	-38.08	577.76	577.85
AV	715+17.88	-38.08	577.61	577.68
AW	715+27.88	-38.08	577.45	577.50
℄ Brg. E. Abut.	715+37.38	-38.08	577.30	577.32
Bk. E. Abut.	715+39.84	-38.08	577.26	577.28

Notes:

All Elevations and Offsets are in feet.

FOR INFORMATION ONLY

MODEL: SHEET
FILE NAME: C:\TRANSYSTEMS\PW_LOCAL\TRANSYSTEMS-PW-01\D0136620\80C53_I80-SHT-011-TOS3.DGN

10/28/2025

exp.

USER NAME =	DESIGNED - CCE	REVISED -	
	CHECKED - VCP	REVISED -	
PLOT SCALE =	DRAWN - MTR	REVISED -	
PLOT DATE =	CHECKED - CCE	REVISED -	

STATE OF ILLINOIS
DEPARTMENT OF TRANSPORTATION

TOP OF SLAB ELEVATIONS 3
STRUCTURE NO. 099-0903 (WB)

SHEET S-9 OF S-51 SHEETS

F.A.I. RTE.	SECTION	COUNTY	TOTAL SHEETS	SHEET NO.
80	2025-2113-B	WILL	53	11
		CONTRACT NO. 80C53		
	ILLINOIS	FED. AID PROJECT		

WB CROWN

Location	Station	Offset from ℄ I-80	Theoretical Grade Elevations	Theoretical Grade Elevations Adjusted For Dead Load Deflection & Grinding
Bk. W. Abut.	710+03.32	-37.50	578.78	578.80
℄ Brg. W. Abut.	710+05.77	-37.50	578.81	578.83
A	710+15.77	-37.50	578.92	578.98
B	710+25.77	-37.50	579.02	579.12
C	710+35.77	-37.50	579.12	579.24
D	710+45.77	-37.50	579.21	579.35
E	710+55.77	-37.50	579.29	579.44
F	710+65.77	-37.50	579.37	579.51
G	710+75.77	-37.50	579.45	579.57
H	710+85.77	-37.50	579.52	579.62
I	710+95.77	-37.50	579.59	579.66
J	711+05.77	-37.50	579.65	579.69
K	711+15.77	-37.50	579.70	579.73
℄ Brg. Pier 1	711+25.77	-37.50	579.75	579.77
L	711+35.77	-37.50	579.80	579.82
M	711+45.77	-37.50	579.83	579.88
N	711+55.77	-37.50	579.87	579.93
O	711+65.77	-37.50	579.90	579.99
P	711+75.77	-37.50	579.92	580.03
Q	711+85.77	-37.50	579.94	580.07
R	711+95.77	-37.50	579.95	580.09
S	712+05.77	-37.50	579.96	580.10
T	712+15.77	-37.50	579.97	580.09
U	712+25.77	-37.50	579.96	580.07
V	712+35.77	-37.50	579.96	580.04
W	712+45.77	-37.50	579.94	580.01
X	712+55.77	-37.50	579.93	579.97
Y	712+65.77	-37.50	579.90	579.93
℄ Brg. Pier 2	712+76.77	-37.50	579.87	579.89
Z	712+86.77	-37.50	579.84	579.87
AA	712+96.77	-37.50	579.80	579.85
AB	713+06.77	-37.50	579.76	579.83
AC	713+16.77	-37.50	579.71	579.82
AD	713+26.77	-37.50	579.65	579.79
AE	713+36.77	-37.50	579.59	579.75
AF	713+46.77	-37.50	579.53	579.70
AG	713+56.77	-37.50	579.46	579.63
AH	713+66.77	-37.50	579.38	579.55
AI	713+76.77	-37.50	579.30	579.45
AJ	713+86.77	-37.50	579.22	579.34
AK	713+96.77	-37.50	579.13	579.22
AL	714+06.77	-37.50	579.03	579.09
AM	714+16.77	-37.50	578.93	578.97
℄ Brg. Pier 3	714+27.77	-37.50	578.81	578.84
AN	714+37.77	-37.50	578.70	578.72
AO	714+47.77	-37.50	578.59	578.62
AP	714+57.77	-37.50	578.46	578.51
AQ	714+67.77	-37.50	578.34	578.40
AR	714+77.77	-37.50	578.20	578.28
AS	714+87.77	-37.50	578.07	578.15
AT	714+97.77	-37.50	577.92	578.01
AU	715+07.77	-37.50	577.77	577.86
AV	715+17.77	-37.50	577.62	577.69
AW	715+27.77	-37.50	577.46	577.51
℄ Brg. E. Abut.	715+37.27	-37.50	577.31	577.33
Bk. E. Abut.	715+39.73	-37.50	577.27	577.29

GIRDER 7

Location	Station	Offset from ℄ I-80	Theoretical Grade Elevations	Theoretical Grade Elevations Adjusted For Dead Load Deflection & Grinding
Bk. W. Abut.	710+02.16	-31.17	578.68	578.70
℄ Brg. W. Abut.	710+04.62	-31.17	578.70	578.72
A	710+14.62	-31.17	578.81	578.87
B	710+24.62	-31.17	578.91	579.01
C	710+34.62	-31.17	579.01	579.14
D	710+44.62	-31.17	579.10	579.24
E	710+54.62	-31.17	579.19	579.33
F	710+64.62	-31.17	579.27	579.41
G	710+74.62	-31.17	579.35	579.47
H	710+84.62	-31.17	579.42	579.52
I	710+94.62	-31.17	579.48	579.56
J	711+04.62	-31.17	579.54	579.59
K	711+14.62	-31.17	579.60	579.63
℄ Brg. Pier 1	711+24.62	-31.17	579.65	579.67
L	711+34.62	-31.17	579.70	579.72
M	711+44.62	-31.17	579.74	579.78
N	711+54.62	-31.17	579.77	579.83
O	711+64.62	-31.17	579.80	579.89
P	711+74.62	-31.17	579.82	579.93
Q	711+84.62	-31.17	579.84	579.97
R	711+94.62	-31.17	579.86	579.99
S	712+04.62	-31.17	579.87	580.00
T	712+14.62	-31.17	579.87	580.00
U	712+24.62	-31.17	579.87	579.98
V	712+34.62	-31.17	579.86	579.95
W	712+44.62	-31.17	579.85	579.91
X	712+54.62	-31.17	579.83	579.88
Y	712+64.62	-31.17	579.81	579.84
℄ Brg. Pier 2	712+75.62	-31.17	579.78	579.80
Z	712+85.62	-31.17	579.75	579.78
AA	712+95.62	-31.17	579.71	579.76
AB	713+05.62	-31.17	579.67	579.75
AC	713+15.62	-31.17	579.62	579.73
AD	713+25.62	-31.17	579.56	579.70
AE	713+35.62	-31.17	579.51	579.66
AF	713+45.62	-31.17	579.44	579.61
AG	713+55.62	-31.17	579.37	579.54
AH	713+65.62	-31.17	579.30	579.46
AI	713+75.62	-31.17	579.22	579.36
AJ	713+85.62	-31.17	579.13	579.25
AK	713+95.62	-31.17	579.04	579.13
AL	714+05.62	-31.17	578.95	579.01
AM	714+15.62	-31.17	578.85	578.89
℄ Brg. Pier 3	714+26.62	-31.17	578.73	578.75
AN	714+36.62	-31.17	578.62	578.64
AO	714+46.62	-31.17	578.50	578.53
AP	714+56.62	-31.17	578.38	578.43
AQ	714+66.62	-31.17	578.26	578.32
AR	714+76.62	-31.17	578.12	578.20
AS	714+86.62	-31.17	577.99	578.08
AT	714+96.62	-31.17	577.84	577.93
AU	715+06.62	-31.17	577.70	577.78
AV	715+16.62	-31.17	577.54	577.61
AW	715+26.62	-31.17	577.39	577.43
℄ Brg. E. Abut.	715+36.12	-31.17	577.23	577.25
Bk. E. Abut.	715+38.58	-31.17	577.19	577.21

WB STAGE CONSTRUCTION JOINT

Location	Station	Offset from ℄ I-80	Theoretical Grade Elevations	Theoretical Grade Elevations Adjusted For Dead Load Deflection & Grinding
Bk. W. Abut.	710+01.49	-27.50	578.61	578.63
CL Brg. W. Abut.	710+03.95	-27.50	578.64	578.66
A	710+13.95	-27.50	578.75	578.81
B	710+23.95	-27.50	578.85	578.95
C	710+33.95	-27.50	578.95	579.07
D	710+43.95	-27.50	579.04	579.18
E	710+53.95	-27.50	579.13	579.27
F	710+63.95	-27.50	579.21	579.35
G	710+73.95	-27.50	579.29	579.41
H	710+83.95	-27.50	579.36	579.46
I	710+93.95	-27.50	579.42	579.50
J	711+03.95	-27.50	579.49	579.53
K	711+13.95	-27.50	579.54	579.57
℄ Brg. Pier 1	711+23.95	-27.50	579.59	579.61
L	711+33.95	-27.50	579.64	579.66
M	711+43.95	-27.50	579.68	579.72
N	711+53.95	-27.50	579.71	579.78
O	711+63.95	-27.50	579.74	579.83
P	711+73.95	-27.50	579.77	579.88
Q	711+83.95	-27.50	579.79	579.91
R	711+93.95	-27.50	579.80	579.94
S	712+03.95	-27.50	579.81	579.95
T	712+13.95	-27.50	579.82	579.94
U	712+23.95	-27.50	579.81	579.92
V	712+33.95	-27.50	579.81	579.90
W	712+43.95	-27.50	579.80	579.86
X	712+53.95	-27.50	579.78	579.82
Y	712+63.95	-27.50	579.76	579.79
℄ Brg. Pier 2	712+74.95	-27.50	579.73	579.75
Z	712+84.95	-27.50	579.70	579.73
AA	712+94.95	-27.50	579.66	579.71
AB	713+04.95	-27.50	579.62	579.69
AC	713+14.95	-27.50	579.57	579.68
AD	713+24.95	-27.50	579.51	579.65
AE	713+34.95	-27.50	579.46	579.61
AF	713+44.95	-27.50	579.39	579.56
AG	713+54.95	-27.50	579.32	579.49
AH	713+64.95	-27.50	579.25	579.41
AI	713+74.95	-27.50	579.17	579.31
AJ	713+84.95	-27.50	579.08	579.20
AK	713+94.95	-27.50	578.99	579.09
AL	714+04.95	-27.50	578.90	578.96
AM	714+14.95	-27.50	578.80	578.84
℄ Brg. Pier 3	714+25.95	-27.50	578.68	578.70
AN	714+35.95	-27.50	578.57	578.59
AO	714+45.95	-27.50	578.46	578.49
AP	714+55.95	-27.50	578.34	578.38
AQ	714+65.95	-27.50	578.21	578.27
AR	714+75.95	-27.50	578.08	578.16
AS	714+85.95	-27.50	577.94	578.03
AT	714+95.95	-27.50	577.80	577.89
AU	715+05.95	-27.50	577.65	577.73
AV	715+15.95	-27.50	577.50	577.57
AW	715+25.95	-27.50	577.34	577.39
℄ Brg. E. Abut.	715+35.45	-27.50	577.19	577.21
Bk. E. Abut.	715+37.91	-27.50	577.15	577.17

Notes:

All Elevations and Offsets are in feet.

FOR INFORMATION ONLY

MODEL: SHEET
FILE NAME: C:\TRANSYSTEMS\PW_LOCAL\TRANSYSTEMS-PW-01\D0136620\80C53_I80-SHT-012-TOS4.DGN

10/28/2025

exp.

USER NAME =	DESIGNED - CCE	REVISED -	
	CHECKED - VCP	REVISED -	
PLOT SCALE =	DRAWN - MTR	REVISED -	
PLOT DATE =	CHECKED - CCE	REVISED -	

STATE OF ILLINOIS
DEPARTMENT OF TRANSPORTATION

TOP OF SLAB ELEVATIONS 4
STRUCTURE NO. 099-0903 (WB)

SHEET S-10 OF S-51 SHEETS

F.A.I. RTE.	SECTION	COUNTY	TOTAL SHEETS	SHEET NO.
80	2025-2113-B	WILL	53	12
		CONTRACT NO. 80C53		
	ILLINOIS	FED. AID PROJECT		

WB SOUTH CROSS SLOPE BREAK POINT

Location	Station	Offset from ℄ I-80	Theoretical Grade Elevations	Theoretical Grade Elevations Adjusted For Dead Load Deflection & Grinding
Bk. W. Abut.	710+01.13	-25.50	578.58	578.60
℄ Brg. W. Abut.	710+03.59	-25.50	578.61	578.63
A	710+13.59	-25.50	578.71	578.78
B	710+23.59	-25.50	578.82	578.92
C	710+33.59	-25.50	578.92	579.04
D	710+43.59	-25.50	579.01	579.15
E	710+53.59	-25.50	579.09	579.24
F	710+63.59	-25.50	579.18	579.32
G	710+73.59	-25.50	579.25	579.38
H	710+83.59	-25.50	579.33	579.42
I	710+93.59	-25.50	579.39	579.46
J	711+03.59	-25.50	579.45	579.50
K	711+13.59	-25.50	579.51	579.54
℄ Brg. Pier 1	711+23.59	-25.50	579.56	579.58
L	711+33.59	-25.50	579.61	579.63
M	711+43.59	-25.50	579.65	579.69
N	711+53.59	-25.50	579.68	579.74
O	711+63.59	-25.50	579.71	579.80
P	711+73.59	-25.50	579.74	579.85
Q	711+83.59	-25.50	579.76	579.88
R	711+93.59	-25.50	579.77	579.91
S	712+03.59	-25.50	579.78	579.92
T	712+13.59	-25.50	579.79	579.91
U	712+23.59	-25.50	579.78	579.89
V	712+33.59	-25.50	579.78	579.87
W	712+43.59	-25.50	579.77	579.83
X	712+53.59	-25.50	579.75	579.79
Y	712+63.59	-25.50	579.73	579.76
℄ Brg. Pier 2	712+74.59	-25.50	579.70	579.72
Z	712+84.59	-25.50	579.67	579.70
AA	712+94.59	-25.50	579.63	579.68
AB	713+04.59	-25.50	579.59	579.67
AC	713+14.59	-25.50	579.54	579.65
AD	713+24.59	-25.50	579.49	579.62
AE	713+34.59	-25.50	579.43	579.58
AF	713+44.59	-25.50	579.36	579.53
AG	713+54.59	-25.50	579.29	579.47
AH	713+64.59	-25.50	579.22	579.39
AI	713+74.59	-25.50	579.14	579.29
AJ	713+84.59	-25.50	579.06	579.18
AK	713+94.59	-25.50	578.97	579.06
AL	714+04.59	-25.50	578.87	578.93
AM	714+14.59	-25.50	578.77	578.81
℄ Brg. Pier 3	714+25.59	-25.50	578.66	578.68
AN	714+35.59	-25.50	578.55	578.57
AO	714+45.59	-25.50	578.43	578.46
AP	714+55.59	-25.50	578.31	578.36
AQ	714+65.59	-25.50	578.18	578.25
AR	714+75.59	-25.50	578.05	578.13
AS	714+85.59	-25.50	577.92	578.00
AT	714+95.59	-25.50	577.77	577.86
AU	715+05.59	-25.50	577.63	577.71
AV	715+15.59	-25.50	577.48	577.54
AW	715+25.59	-25.50	577.32	577.36
℄ Brg. E. Abut.	715+35.09	-25.50	577.16	577.18
Bk. E. Abut.	715+37.54	-25.50	577.12	577.14

GIRDER 8

Location	Station	Offset from ℄ I-80	Theoretical Grade Elevations	Theoretical Grade Elevations Adjusted For Dead Load Deflection & Grinding
Bk. W. Abut.	710+00.90	-24.25	578.55	578.57
℄ Brg. W. Abut.	710+03.36	-24.25	578.58	578.60
A	710+13.36	-24.25	578.69	578.75
B	710+23.36	-24.25	578.79	578.89
C	710+33.36	-24.25	578.89	579.01
D	710+43.36	-24.25	578.98	579.12
E	710+53.36	-24.25	579.07	579.21
F	710+63.36	-24.25	579.15	579.29
G	710+73.36	-24.25	579.23	579.35
H	710+83.36	-24.25	579.30	579.40
I	710+93.36	-24.25	579.37	579.44
J	711+03.36	-24.25	579.43	579.47
K	711+13.36	-24.25	579.48	579.51
℄ Brg. Pier 1	711+23.36	-24.25	579.53	579.55
L	711+33.36	-24.25	579.58	579.61
M	711+43.36	-24.25	579.62	579.66
N	711+53.36	-24.25	579.66	579.72
O	711+63.36	-24.25	579.69	579.77
P	711+73.36	-24.25	579.71	579.82
Q	711+83.36	-24.25	579.73	579.86
R	711+93.36	-24.25	579.75	579.88
S	712+03.36	-24.25	579.76	579.89
T	712+13.36	-24.25	579.76	579.89
U	712+23.36	-24.25	579.76	579.87
V	712+33.36	-24.25	579.75	579.84
W	712+43.36	-24.25	579.74	579.81
X	712+53.36	-24.25	579.73	579.77
Y	712+63.36	-24.25	579.71	579.73
℄ Brg. Pier 2	712+74.36	-24.25	579.68	579.70
Z	712+84.36	-24.25	579.64	579.68
AA	712+94.36	-24.25	579.61	579.66
AB	713+04.36	-24.25	579.56	579.64
AC	713+14.36	-24.25	579.51	579.62
AD	713+24.36	-24.25	579.46	579.60
AE	713+34.36	-24.25	579.40	579.56
AF	713+44.36	-24.25	579.34	579.51
AG	713+54.36	-24.25	579.27	579.44
AH	713+64.36	-24.25	579.20	579.36
AI	713+74.36	-24.25	579.12	579.26
AJ	713+84.36	-24.25	579.03	579.15
AK	713+94.36	-24.25	578.95	579.04
AL	714+04.36	-24.25	578.85	578.91
AM	714+14.36	-24.25	578.75	578.79
℄ Brg. Pier 3	714+25.36	-24.25	578.64	578.66
AN	714+35.36	-24.25	578.52	578.55
AO	714+45.36	-24.25	578.41	578.44
AP	714+55.36	-24.25	578.29	578.33
AQ	714+65.36	-24.25	578.16	578.23
AR	714+75.36	-24.25	578.03	578.11
AS	714+85.36	-24.25	577.89	577.98
AT	714+95.36	-24.25	577.75	577.84
AU	715+05.36	-24.25	577.61	577.69
AV	715+15.36	-24.25	577.45	577.52
AW	715+25.36	-24.25	577.30	577.34
℄ Brg. E. Abut.	715+34.86	-24.25	577.14	577.16
Bk. E. Abut.	715+37.31	-24.25	577.10	577.12

GIRDER 9

Location	Station	Offset from ℄ I-80	Theoretical Grade Elevations	Theoretical Grade Elevations Adjusted For Dead Load Deflection & Grinding
Bk. W. Abut.	709+99.64	-17.33	578.40	578.42
℄ Brg. W. Abut.	710+02.10	-17.33	578.43	578.45
A	710+12.10	-17.33	578.54	578.60
B	710+22.10	-17.33	578.64	578.75
C	710+32.10	-17.33	578.74	578.88
D	710+42.10	-17.33	578.83	578.99
E	710+52.10	-17.33	578.92	579.08
F	710+62.10	-17.33	579.00	579.16
G	710+72.10	-17.33	579.08	579.22
H	710+82.10	-17.33	579.15	579.26
I	710+92.10	-17.33	579.22	579.30
J	711+02.10	-17.33	579.28	579.33
K	711+12.10	-17.33	579.34	579.37
℄ Brg. Pier 1	711+22.10	-17.33	579.39	579.41
L	711+32.10	-17.33	579.44	579.46
M	711+42.10	-17.33	579.48	579.52
N	711+52.10	-17.33	579.51	579.58
O	711+62.10	-17.33	579.54	579.64
P	711+72.10	-17.33	579.57	579.69
Q	711+82.10	-17.33	579.59	579.73
R	711+92.10	-17.33	579.61	579.76
S	712+02.10	-17.33	579.62	579.77
T	712+12.10	-17.33	579.62	579.77
U	712+22.10	-17.33	579.62	579.74
V	712+32.10	-17.33	579.62	579.71
W	712+42.10	-17.33	579.61	579.68
X	712+52.10	-17.33	579.59	579.64
Y	712+62.10	-17.33	579.57	579.60
℄ Brg. Pier 2	712+73.10	-17.33	579.54	579.56
Z	712+83.10	-17.33	579.51	579.54
AA	712+93.10	-17.33	579.47	579.53
AB	713+03.10	-17.33	579.43	579.52
AC	713+13.10	-17.33	579.38	579.50
AD	713+23.10	-17.33	579.33	579.48
AE	713+33.10	-17.33	579.27	579.45
AF	713+43.10	-17.33	579.21	579.40
AG	713+53.10	-17.33	579.14	579.34
AH	713+63.10	-17.33	579.07	579.25
AI	713+73.10	-17.33	578.99	579.15
AJ	713+83.10	-17.33	578.91	579.04
AK	713+93.10	-17.33	578.82	578.92
AL	714+03.10	-17.33	578.72	578.79
AM	714+13.10	-17.33	578.63	578.67
℄ Brg. Pier 3	714+24.10	-17.33	578.51	578.53
AN	714+34.10	-17.33	578.40	578.42
AO	714+44.10	-17.33	578.29	578.32
AP	714+54.10	-17.33	578.17	578.22
AQ	714+64.10	-17.33	578.04	578.11
AR	714+74.10	-17.33	577.91	578.00
AS	714+84.10	-17.33	577.77	577.87
AT	714+94.10	-17.33	577.63	577.73
AU	715+04.10	-17.33	577.49	577.58
AV	715+14.10	-17.33	577.33	577.41
AW	715+24.10	-17.33	577.18	577.23
℄ Brg. E. Abut.	715+33.60	-17.33	577.02	577.05
Bk. E. Abut.	715+36.05	-17.33	576.98	577.01

Notes:

All Elevations and Offsets are in feet.

FOR INFORMATION ONLY

MODEL: SHEET
FILE NAME: C:\TRANSYSTEMS\PW_LOCAL\TRANSYSTEMS-PW-01\D0136620\80C53_I80-SHT-013-TOSS.DGN

10/28/2025

exp.

USER NAME =	DESIGNED - CCE	REVISED -	
	CHECKED - VCP	REVISED -	
PLOT SCALE =	DRAWN - MTR	REVISED -	
PLOT DATE =	CHECKED - CCE	REVISED -	

STATE OF ILLINOIS
DEPARTMENT OF TRANSPORTATION

TOP OF SLAB ELEVATIONS 5
STRUCTURE NO. 099-0903 (WB)

SHEET S-11 OF S-51 SHEETS

F.A.I. RTE.	SECTION	COUNTY	TOTAL SHEETS	SHEET NO.
80	2025-2113-B	WILL	53	13
		CONTRACT NO. 80C53		
	ILLINOIS	FED. AID PROJECT		

WB PGL AND SOUTH EDGE OF ROADWAY

Location	Station	Offset from ℄ I-80	Theoretical Grade Elevations	Theoretical Grade Elevations Adjusted For Dead Load Deflection & Grinding
Bk. W. Abut.	709+98.94	-13.50	578.31	578.34
℄ Brg. W. Abut.	710+01.40	-13.50	578.34	578.36
A	710+11.40	-13.50	578.45	578.52
B	710+21.40	-13.50	578.56	578.66
C	710+31.40	-13.50	578.65	578.79
D	710+41.40	-13.50	578.75	578.91
E	710+51.40	-13.50	578.84	579.00
F	710+61.40	-13.50	578.92	579.08
G	710+71.40	-13.50	579.00	579.13
H	710+81.40	-13.50	579.07	579.18
I	710+91.40	-13.50	579.14	579.22
J	711+01.40	-13.50	579.20	579.25
K	711+11.40	-13.50	579.26	579.29
℄ Brg. Pier 1	711+21.40	-13.50	579.31	579.33
L	711+31.40	-13.50	579.36	579.38
M	711+41.40	-13.50	579.40	579.44
N	711+51.40	-13.50	579.43	579.50
O	711+61.40	-13.50	579.47	579.56
P	711+71.40	-13.50	579.49	579.62
Q	711+81.40	-13.50	579.51	579.66
R	711+91.40	-13.50	579.53	579.68
S	712+01.40	-13.50	579.54	579.69
T	712+11.40	-13.50	579.55	579.69
U	712+21.40	-13.50	579.55	579.67
V	712+31.40	-13.50	579.54	579.64
W	712+41.40	-13.50	579.53	579.60
X	712+51.40	-13.50	579.52	579.56
Y	712+61.40	-13.50	579.49	579.52
℄ Brg. Pier 2	712+72.40	-13.50	579.47	579.49
Z	712+82.40	-13.50	579.43	579.47
AA	712+92.40	-13.50	579.40	579.45
AB	713+02.40	-13.50	579.36	579.44
AC	713+12.40	-13.50	579.31	579.43
AD	713+22.40	-13.50	579.26	579.41
AE	713+32.40	-13.50	579.20	579.38
AF	713+42.40	-13.50	579.14	579.33
AG	713+52.40	-13.50	579.07	579.26
AH	713+62.40	-13.50	579.00	579.18
AI	713+72.40	-13.50	578.92	579.08
AJ	713+82.40	-13.50	578.84	578.97
AK	713+92.40	-13.50	578.75	578.85
AL	714+02.40	-13.50	578.65	578.72
AM	714+12.40	-13.50	578.56	578.60
℄ Brg. Pier 3	714+23.40	-13.50	578.44	578.46
AN	714+33.40	-13.50	578.33	578.35
AO	714+43.40	-13.50	578.22	578.25
AP	714+53.40	-13.50	578.10	578.15
AQ	714+63.40	-13.50	577.97	578.04
AR	714+73.40	-13.50	577.84	577.93
AS	714+83.40	-13.50	577.71	577.81
AT	714+93.40	-13.50	577.57	577.67
AU	715+03.40	-13.50	577.42	577.51
AV	715+13.40	-13.50	577.27	577.34
AW	715+23.40	-13.50	577.11	577.16
℄ Brg. E. Abut.	715+32.90	-13.50	576.96	576.98
Bk. E. Abut.	715+35.35	-13.50	576.92	576.94

GIRDER 10

Location	Station	Offset from ℄ I-80	Theoretical Grade Elevations	Theoretical Grade Elevations Adjusted For Dead Load Deflection & Grinding
Bk. W. Abut.	709+98.38	-10.42	578.25	578.27
℄ Brg. W. Abut.	710+00.84	-10.42	578.27	578.30
A	710+10.84	-10.42	578.38	578.45
B	710+20.84	-10.42	578.49	578.60
C	710+30.84	-10.42	578.59	578.73
D	710+40.84	-10.42	578.68	578.84
E	710+50.84	-10.42	578.77	578.93
F	710+60.84	-10.42	578.85	579.01
G	710+70.84	-10.42	578.93	579.07
H	710+80.84	-10.42	579.00	579.11
I	710+90.84	-10.42	579.07	579.15
J	711+00.84	-10.42	579.14	579.19
K	711+10.84	-10.42	579.19	579.22
℄ Brg. Pier 1	711+20.84	-10.42	579.25	579.27
L	711+30.84	-10.42	579.29	579.32
M	711+40.84	-10.42	579.33	579.38
N	711+50.84	-10.42	579.37	579.44
O	711+60.84	-10.42	579.40	579.50
P	711+70.84	-10.42	579.43	579.55
Q	711+80.84	-10.42	579.45	579.59
R	711+90.84	-10.42	579.47	579.62
S	712+00.84	-10.42	579.48	579.63
T	712+10.84	-10.42	579.48	579.63
U	712+20.84	-10.42	579.48	579.61
V	712+30.84	-10.42	579.48	579.58
W	712+40.84	-10.42	579.47	579.54
X	712+50.84	-10.42	579.45	579.50
Y	712+60.84	-10.42	579.43	579.46
℄ Brg. Pier 2	712+71.84	-10.42	579.41	579.43
Z	712+81.84	-10.42	579.38	579.41
AA	712+91.84	-10.42	579.34	579.39
AB	713+01.84	-10.42	579.30	579.38
AC	713+11.84	-10.42	579.25	579.37
AD	713+21.84	-10.42	579.20	579.35
AE	713+31.84	-10.42	579.14	579.32
AF	713+41.84	-10.42	579.08	579.27
AG	713+51.84	-10.42	579.01	579.21
AH	713+61.84	-10.42	578.94	579.13
AI	713+71.84	-10.42	578.86	579.03
AJ	713+81.84	-10.42	578.78	578.91
AK	713+91.84	-10.42	578.69	578.79
AL	714+01.84	-10.42	578.60	578.67
AM	714+11.84	-10.42	578.50	578.54
℄ Brg. Pier 3	714+22.84	-10.42	578.39	578.41
AN	714+32.84	-10.42	578.28	578.30
AO	714+42.84	-10.42	578.16	578.19
AP	714+52.84	-10.42	578.04	578.09
AQ	714+62.84	-10.42	577.92	577.99
AR	714+72.84	-10.42	577.79	577.88
AS	714+82.84	-10.42	577.65	577.75
AT	714+92.84	-10.42	577.51	577.61
AU	715+02.84	-10.42	577.37	577.46
AV	715+12.84	-10.42	577.22	577.29
AW	715+22.84	-10.42	577.06	577.11
℄ Brg. E. Abut.	715+32.34	-10.42	576.91	576.93
Bk. E. Abut.	715+34.79	-10.42	576.87	576.89

GIRDER 11

Location	Station	Offset from ℄ I-80	Theoretical Grade Elevations	Theoretical Grade Elevations Adjusted For Dead Load Deflection & Grinding
Bk. W. Abut.	709+97.12	-3.50	578.09	578.12
℄ Brg. W. Abut.	709+99.57	-3.50	578.12	578.14
A	710+09.57	-3.50	578.23	578.31
B	710+19.57	-3.50	578.34	578.46
C	710+29.57	-3.50	578.44	578.59
D	710+39.57	-3.50	578.53	578.71
E	710+49.57	-3.50	578.62	578.80
F	710+59.57	-3.50	578.70	578.88
G	710+69.57	-3.50	578.78	578.93
H	710+79.57	-3.50	578.86	578.98
I	710+89.57	-3.50	578.93	579.01
J	710+99.57	-3.50	578.99	579.04
K	711+09.57	-3.50	579.05	579.08
℄ Brg. Pier 1	711+19.57	-3.50	579.10	579.12
L	711+29.57	-3.50	579.15	579.18
M	711+39.57	-3.50	579.19	579.24
N	711+49.57	-3.50	579.23	579.30
O	711+59.57	-3.50	579.26	579.37
P	711+69.57	-3.50	579.29	579.42
Q	711+79.57	-3.50	579.31	579.47
R	711+89.57	-3.50	579.33	579.50
S	711+99.57	-3.50	579.34	579.51
T	712+09.57	-3.50	579.34	579.50
U	712+19.57	-3.50	579.35	579.48
V	712+29.57	-3.50	579.34	579.45
W	712+39.57	-3.50	579.33	579.41
X	712+49.57	-3.50	579.32	579.37
Y	712+59.57	-3.50	579.30	579.33
℄ Brg. Pier 2	712+70.57	-3.50	579.27	579.29
Z	712+80.57	-3.50	579.24	579.28
AA	712+90.57	-3.50	579.21	579.27
AB	713+00.57	-3.50	579.16	579.26
AC	713+10.57	-3.50	579.12	579.25
AD	713+20.57	-3.50	579.07	579.24
AE	713+30.57	-3.50	579.01	579.21
AF	713+40.57	-3.50	578.95	579.16
AG	713+50.57	-3.50	578.88	579.10
AH	713+60.57	-3.50	578.81	579.02
AI	713+70.57	-3.50	578.73	578.92
AJ	713+80.57	-3.50	578.65	578.80
AK	713+90.57	-3.50	578.56	578.68
AL	714+00.57	-3.50	578.47	578.54
AM	714+10.57	-3.50	578.37	578.42
℄ Brg. Pier 3	714+21.57	-3.50	578.26	578.28
AN	714+31.57	-3.50	578.15	578.17
AO	714+41.57	-3.50	578.04	578.07
AP	714+51.57	-3.50	577.92	577.97
AQ	714+61.57	-3.50	577.80	577.87
AR	714+71.57	-3.50	577.67	577.76
AS	714+81.57	-3.50	577.53	577.64
AT	714+91.57	-3.50	577.39	577.50
AU	715+01.57	-3.50	577.25	577.35
AV	715+11.57	-3.50	577.10	577.18
AW	715+21.57	-3.50	576.94	576.99
℄ Brg. E. Abut.	715+31.07	-3.50	576.79	576.81
Bk. E. Abut.	715+33.53	-3.50	576.75	576.77

Notes:

All Elevations and Offsets are in feet.

FOR INFORMATION ONLY

MODEL: SHEET
FILE NAME: C:\TRANSYSTEMS\PW_LOCAL\TRANSYSTEMS-PW-01\D0136620\80C53_I80-SHT-014-TOS6.DGN

10/28/2025

exp.

USER NAME =	DESIGNED - CCE	REVISED -	
	CHECKED - VCP	REVISED -	
PLOT SCALE =	DRAWN - MTR	REVISED -	
PLOT DATE =	CHECKED - CCE	REVISED -	

STATE OF ILLINOIS
DEPARTMENT OF TRANSPORTATION

TOP OF SLAB ELEVATIONS 6
STRUCTURE NO. 099-0903 (WB)

SHEET S-12 OF S-51 SHEETS

F.A.I. RTE.	SECTION	COUNTY	TOTAL SHEETS	SHEET NO.
80	2025-2113-B	WILL	53	14
		CONTRACT NO. 80C53		
	ILLINOIS	FED. AID PROJECT		

WB INSIDE FACE OF SOUTH PARAPET

Location	Station	Offset from ℄ I-80	Theoretical Grade Elevations	Theoretical Grade Elevations Adjusted For Dead Load Deflection & Grinding
Bk. W. Abut.	709+96.75	-1.50	578.05	578.07
℄ Brg. W. Abut.	709+99.21	-1.50	578.08	578.10
A	710+09.21	-1.50	578.19	578.26
B	710+19.21	-1.50	578.29	578.41
C	710+29.21	-1.50	578.39	578.55
D	710+39.21	-1.50	578.49	578.66
E	710+49.21	-1.50	578.58	578.76
F	710+59.21	-1.50	578.66	578.84
G	710+69.21	-1.50	578.74	578.89
H	710+79.21	-1.50	578.81	578.94
I	710+89.21	-1.50	578.88	578.97
J	710+99.21	-1.50	578.95	579.00
K	711+09.21	-1.50	579.01	579.04
℄ Brg. Pier 1	711+19.21	-1.50	579.06	579.08
L	711+29.21	-1.50	579.11	579.14
M	711+39.21	-1.50	579.15	579.20
N	711+49.21	-1.50	579.19	579.26
O	711+59.21	-1.50	579.22	579.33
P	711+69.21	-1.50	579.25	579.38
Q	711+79.21	-1.50	579.27	579.43
R	711+89.21	-1.50	579.29	579.46
S	711+99.21	-1.50	579.30	579.47
T	712+09.21	-1.50	579.30	579.46
U	712+19.21	-1.50	579.31	579.44
V	712+29.21	-1.50	579.30	579.41
W	712+39.21	-1.50	579.29	579.37
X	712+49.21	-1.50	579.28	579.33
Y	712+59.21	-1.50	579.26	579.29
℄ Brg. Pier 2	712+70.21	-1.50	579.23	579.25
Z	712+80.21	-1.50	579.20	579.24
AA	712+90.21	-1.50	579.17	579.23
AB	713+00.21	-1.50	579.13	579.22
AC	713+10.21	-1.50	579.08	579.21
AD	713+20.21	-1.50	579.03	579.20
AE	713+30.21	-1.50	578.97	579.17
AF	713+40.21	-1.50	578.91	579.13
AG	713+50.21	-1.50	578.85	579.06
AH	713+60.21	-1.50	578.77	578.98
AI	713+70.21	-1.50	578.70	578.88
AJ	713+80.21	-1.50	578.62	578.76
AK	713+90.21	-1.50	578.53	578.64
AL	714+00.21	-1.50	578.44	578.51
AM	714+10.21	-1.50	578.34	578.38
℄ Brg. Pier 3	714+21.21	-1.50	578.22	578.25
AN	714+31.21	-1.50	578.12	578.14
AO	714+41.21	-1.50	578.00	578.04
AP	714+51.21	-1.50	577.88	577.94
AQ	714+61.21	-1.50	577.76	577.84
AR	714+71.21	-1.50	577.63	577.73
AS	714+81.21	-1.50	577.50	577.61
AT	714+91.21	-1.50	577.36	577.47
AU	715+01.21	-1.50	577.21	577.31
AV	715+11.21	-1.50	577.06	577.14
AW	715+21.21	-1.50	576.91	576.96
℄ Brg. E. Abut.	715+30.71	-1.50	576.76	576.78
Bk. E. Abut.	715+33.17	-1.50	576.72	576.74

FOR INFORMATION ONLY

Notes:

All Elevations and Offsets are in feet.

MODEL: SHEET
FILE NAME: C:\TRANSYSTEMS\PW_LOCAL\TRANSYSTEMS-PW-01\D0136620\80C53_I80-SHT-015-TOS7.DGN

10/28/2025

exp.

USER NAME =	DESIGNED - CCE	REVISED -	
	CHECKED - VCP	REVISED -	
PLOT SCALE =	DRAWN - MTR	REVISED -	
PLOT DATE =	CHECKED - CCE	REVISED -	

STATE OF ILLINOIS
DEPARTMENT OF TRANSPORTATION

TOP OF SLAB ELEVATIONS 7
STRUCTURE NO. 099-0903 (WB)

SHEET S-13 OF S-51 SHEETS

F.A.I. RTE.	SECTION	COUNTY	TOTAL SHEETS	SHEET NO.
80	2025-2113-B	WILL	53	15
		CONTRACT NO. 80C53		
	ILLINOIS	FED. AID PROJECT		

EB INSIDE FACE OF NORTH PARAPET

Location	Station	Offset from ℄ I-80	Theoretical Grade Elevations	Theoretical Grade Elevations Adjusted For Dead Load Deflection & Grinding
Bk. W. Abut.	709+96.21	1.50	578.04	578.06
℄ Brg. W. Abut.	709+98.66	1.50	578.07	578.09
A	710+08.66	1.50	578.18	578.26
B	710+18.66	1.50	578.29	578.41
C	710+28.66	1.50	578.39	578.54
D	710+38.66	1.50	578.48	578.66
E	710+48.66	1.50	578.57	578.75
F	710+58.66	1.50	578.66	578.83
G	710+68.66	1.50	578.74	578.89
H	710+78.66	1.50	578.81	578.93
I	710+88.66	1.50	578.88	578.97
J	710+98.66	1.50	578.94	579.00
K	711+08.66	1.50	579.00	579.03
℄ Brg. Pier 1	711+18.66	1.50	579.06	579.08
L	711+28.66	1.50	579.10	579.13
M	711+38.66	1.50	579.15	579.20
N	711+48.66	1.50	579.19	579.26
O	711+58.66	1.50	579.22	579.33
P	711+68.66	1.50	579.25	579.38
Q	711+78.66	1.50	579.27	579.43
R	711+88.66	1.50	579.29	579.46
S	711+98.66	1.50	579.30	579.47
T	712+08.66	1.50	579.30	579.46
U	712+18.66	1.50	579.31	579.44
V	712+28.66	1.50	579.30	579.41
W	712+38.66	1.50	579.29	579.37
X	712+48.66	1.50	579.28	579.33
Y	712+58.66	1.50	579.26	579.29
℄ Brg. Pier 2	712+69.66	1.50	579.23	579.25
Z	712+79.66	1.50	579.20	579.24
AA	712+89.66	1.50	579.17	579.23
AB	712+99.66	1.50	579.13	579.22
AC	713+09.66	1.50	579.08	579.22
AD	713+19.66	1.50	579.03	579.20
AE	713+29.66	1.50	578.98	579.17
AF	713+39.66	1.50	578.92	579.13
AG	713+49.66	1.50	578.85	579.07
AH	713+59.66	1.50	578.78	578.98
AI	713+69.66	1.50	578.70	578.88
AJ	713+79.66	1.50	578.62	578.77
AK	713+89.66	1.50	578.53	578.64
AL	713+99.66	1.50	578.44	578.51
AM	714+09.66	1.50	578.34	578.39
℄ Brg. Pier 3	714+20.66	1.50	578.23	578.25
AN	714+30.66	1.50	578.12	578.14
AO	714+40.66	1.50	578.01	578.04
AP	714+50.66	1.50	577.89	577.94
AQ	714+60.66	1.50	577.77	577.84
AR	714+70.66	1.50	577.64	577.73
AS	714+80.66	1.50	577.50	577.61
AT	714+90.66	1.50	577.36	577.48
AU	715+00.66	1.50	577.22	577.32
AV	715+10.66	1.50	577.07	577.15
AW	715+20.66	1.50	576.92	576.97
℄ Brg. E. Abut.	715+30.16	1.50	576.76	576.79
Bk. E. Abut.	715+32.62	1.50	576.72	576.74

GIRDER 12

Location	Station	Offset from ℄ I-80	Theoretical Grade Elevations	Theoretical Grade Elevations Adjusted For Dead Load Deflection & Grinding
Bk. W. Abut.	709+95.84	3.50	578.08	578.10
℄ Brg. W. Abut.	709+98.30	3.50	578.11	578.13
A	710+08.30	3.50	578.22	578.29
B	710+18.30	3.50	578.32	578.44
C	710+28.30	3.50	578.42	578.58
D	710+38.30	3.50	578.52	578.70
E	710+48.30	3.50	578.61	578.79
F	710+58.30	3.50	578.69	578.87
G	710+68.30	3.50	578.77	578.92
H	710+78.30	3.50	578.85	578.97
I	710+88.30	3.50	578.92	579.00
J	710+98.30	3.50	578.98	579.04
K	711+08.30	3.50	579.04	579.07
℄ Brg. Pier 1	711+18.30	3.50	579.09	579.11
L	711+28.30	3.50	579.14	579.17
M	711+38.30	3.50	579.19	579.24
N	711+48.30	3.50	579.22	579.30
O	711+58.30	3.50	579.26	579.37
P	711+68.30	3.50	579.28	579.42
Q	711+78.30	3.50	579.31	579.47
R	711+88.30	3.50	579.32	579.50
S	711+98.30	3.50	579.34	579.51
T	712+08.30	3.50	579.34	579.50
U	712+18.30	3.50	579.35	579.48
V	712+28.30	3.50	579.34	579.45
W	712+38.30	3.50	579.33	579.41
X	712+48.30	3.50	579.32	579.37
Y	712+58.30	3.50	579.30	579.33
℄ Brg. Pier 2	712+69.30	3.50	579.27	579.30
Z	712+79.30	3.50	579.25	579.28
AA	712+89.30	3.50	579.21	579.27
AB	712+99.30	3.50	579.17	579.27
AC	713+09.30	3.50	579.12	579.26
AD	713+19.30	3.50	579.07	579.24
AE	713+29.30	3.50	579.02	579.22
AF	713+39.30	3.50	578.96	579.17
AG	713+49.30	3.50	578.89	579.11
AH	713+59.30	3.50	578.82	579.03
AI	713+69.30	3.50	578.74	578.93
AJ	713+79.30	3.50	578.66	578.81
AK	713+89.30	3.50	578.58	578.69
AL	713+99.30	3.50	578.48	578.56
AM	714+09.30	3.50	578.39	578.43
℄ Brg. Pier 3	714+20.30	3.50	578.27	578.30
AN	714+30.30	3.50	578.17	578.19
AO	714+40.30	3.50	578.05	578.09
AP	714+50.30	3.50	577.94	577.99
AQ	714+60.30	3.50	577.81	577.89
AR	714+70.30	3.50	577.68	577.78
AS	714+80.30	3.50	577.55	577.66
AT	714+90.30	3.50	577.41	577.52
AU	715+00.30	3.50	577.27	577.37
AV	715+10.30	3.50	577.12	577.20
AW	715+20.30	3.50	576.96	577.01
℄ Brg. E. Abut.	715+29.80	3.50	576.81	576.83
Bk. E. Abut.	715+32.26	3.50	576.77	576.79

GIRDER 13

Location	Station	Offset from ℄ I-80	Theoretical Grade Elevations	Theoretical Grade Elevations Adjusted For Dead Load Deflection & Grinding
Bk. W. Abut.	709+94.58	10.42	578.20	578.22
℄ Brg. W. Abut.	709+97.04	10.42	578.23	578.25
A	710+07.04	10.42	578.34	578.41
B	710+17.04	10.42	578.45	578.56
C	710+27.04	10.42	578.55	578.69
D	710+37.04	10.42	578.65	578.80
E	710+47.04	10.42	578.74	578.90
F	710+57.04	10.42	578.82	578.98
G	710+67.04	10.42	578.90	579.04
H	710+77.04	10.42	578.98	579.09
I	710+87.04	10.42	579.05	579.13
J	710+97.04	10.42	579.11	579.16
K	711+07.04	10.42	579.17	579.20
℄ Brg. Pier 1	711+17.04	10.42	579.23	579.25
L	711+27.04	10.42	579.27	579.30
M	711+37.04	10.42	579.32	579.36
N	711+47.04	10.42	579.36	579.43
O	711+57.04	10.42	579.39	579.49
P	711+67.04	10.42	579.42	579.54
Q	711+77.04	10.42	579.44	579.59
R	711+87.04	10.42	579.46	579.61
S	711+97.04	10.42	579.47	579.63
T	712+07.04	10.42	579.48	579.63
U	712+17.04	10.42	579.48	579.61
V	712+27.04	10.42	579.48	579.58
W	712+37.04	10.42	579.47	579.54
X	712+47.04	10.42	579.46	579.51
Y	712+57.04	10.42	579.44	579.47
℄ Brg. Pier 2	712+68.04	10.42	579.42	579.44
Z	712+78.04	10.42	579.39	579.42
AA	712+88.04	10.42	579.35	579.41
AB	712+98.04	10.42	579.31	579.40
AC	713+08.04	10.42	579.27	579.39
AD	713+18.04	10.42	579.22	579.37
AE	713+28.04	10.42	579.16	579.34
AF	713+38.04	10.42	579.10	579.30
AG	713+48.04	10.42	579.04	579.23
AH	713+58.04	10.42	578.97	579.15
AI	713+68.04	10.42	578.89	579.06
AJ	713+78.04	10.42	578.81	578.95
AK	713+88.04	10.42	578.73	578.83
AL	713+98.04	10.42	578.63	578.70
AM	714+08.04	10.42	578.54	578.58
℄ Brg. Pier 3	714+19.04	10.42	578.43	578.45
AN	714+29.04	10.42	578.32	578.34
AO	714+39.04	10.42	578.21	578.24
AP	714+49.04	10.42	578.09	578.14
AQ	714+59.04	10.42	577.97	578.04
AR	714+69.04	10.42	577.84	577.93
AS	714+79.04	10.42	577.70	577.80
AT	714+89.04	10.42	577.57	577.67
AU	714+99.04	10.42	577.42	577.51
AV	715+09.04	10.42	577.27	577.35
AW	715+19.04	10.42	577.12	577.17
℄ Brg. E. Abut.	715+28.54	10.42	576.97	576.99
Bk. E. Abut.	715+30.99	10.42	576.93	576.95

Notes:

All Elevations and Offsets are in feet.

FOR INFORMATION ONLY

MODEL: SHEET
FILE NAME: C:\TRANSYSTEMS\PW_LOCAL\TRANSYSTEMS-PW-01\D0136620\80C53_I80-SHT-016-TOS8.DGN

10/28/2025

exp.

USER NAME =	DESIGNED - CCE	REVISED -	
	CHECKED - VCP	REVISED -	
PLOT SCALE =	DRAWN - MTR	REVISED -	
PLOT DATE =	CHECKED - CCE	REVISED -	

STATE OF ILLINOIS
DEPARTMENT OF TRANSPORTATION

TOP OF SLAB ELEVATIONS 8
STRUCTURE NO. 099-0902 (EB)

SHEET S-14 OF S-51 SHEETS

F.A.I. RTE.	SECTION	COUNTY	TOTAL SHEETS	SHEET NO.
80	2025-2113-B	WILL	53	16
		CONTRACT NO. 80C53		
	ILLINOIS	FED. AID PROJECT		

EB PGL AND NORTH EDGE OF ROADWAY

Location	Station	Offset from ℄ I-80	Theoretical Grade Elevations	Theoretical Grade Elevations Adjusted For Dead Load Deflection & Grinding
Bk. W. Abut.	709+94.02	13.50	578.26	578.28
℄ Brg. W. Abut.	709+96.48	13.50	578.29	578.31
A	710+06.48	13.50	578.40	578.47
B	710+16.48	13.50	578.51	578.61
C	710+26.48	13.50	578.61	578.75
D	710+36.48	13.50	578.70	578.86
E	710+46.48	13.50	578.79	578.96
F	710+56.48	13.50	578.88	579.04
G	710+66.48	13.50	578.96	579.10
H	710+76.48	13.50	579.03	579.14
I	710+86.48	13.50	579.11	579.18
J	710+96.48	13.50	579.17	579.22
K	711+06.48	13.50	579.23	579.26
℄ Brg. Pier 1	711+16.48	13.50	579.28	579.31
L	711+26.48	13.50	579.33	579.36
M	711+36.48	13.50	579.38	579.42
N	711+46.48	13.50	579.42	579.49
O	711+56.48	13.50	579.45	579.55
P	711+66.48	13.50	579.48	579.60
Q	711+76.48	13.50	579.50	579.65
R	711+86.48	13.50	579.52	579.68
S	711+96.48	13.50	579.54	579.69
T	712+06.48	13.50	579.54	579.69
U	712+16.48	13.50	579.55	579.67
V	712+26.48	13.50	579.54	579.64
W	712+36.48	13.50	579.54	579.61
X	712+46.48	13.50	579.52	579.57
Y	712+56.48	13.50	579.51	579.53
℄ Brg. Pier 2	712+67.48	13.50	579.48	579.50
Z	712+77.48	13.50	579.45	579.48
AA	712+87.48	13.50	579.42	579.47
AB	712+97.48	13.50	579.38	579.46
AC	713+07.48	13.50	579.33	579.45
AD	713+17.48	13.50	579.28	579.44
AE	713+27.48	13.50	579.23	579.41
AF	713+37.48	13.50	579.17	579.36
AG	713+47.48	13.50	579.10	579.30
AH	713+57.48	13.50	579.03	579.22
AI	713+67.48	13.50	578.96	579.12
AJ	713+77.48	13.50	578.88	579.01
AK	713+87.48	13.50	578.79	578.89
AL	713+97.48	13.50	578.70	578.77
AM	714+07.48	13.50	578.61	578.65
℄ Brg. Pier 3	714+18.48	13.50	578.49	578.51
AN	714+28.48	13.50	578.39	578.41
AO	714+38.48	13.50	578.27	578.31
AP	714+48.48	13.50	578.16	578.21
AQ	714+58.48	13.50	578.03	578.10
AR	714+68.48	13.50	577.91	577.99
AS	714+78.48	13.50	577.77	577.87
AT	714+88.48	13.50	577.64	577.74
AU	714+98.48	13.50	577.49	577.58
AV	715+08.48	13.50	577.34	577.42
AW	715+18.48	13.50	577.19	577.24
℄ Brg. E. Abut.	715+27.98	13.50	577.04	577.06
Bk. E. Abut.	715+30.43	13.50	577.00	577.02

GIRDER 14

Location	Station	Offset from ℄ I-80	Theoretical Grade Elevations	Theoretical Grade Elevations Adjusted For Dead Load Deflection & Grinding
Bk. W. Abut.	709+93.32	17.33	578.33	578.35
℄ Brg. W. Abut.	709+95.78	17.33	578.36	578.38
A	710+05.78	17.33	578.47	578.54
B	710+15.78	17.33	578.57	578.68
C	710+25.78	17.33	578.68	578.82
D	710+35.78	17.33	578.77	578.93
E	710+45.78	17.33	578.86	579.03
F	710+55.78	17.33	578.95	579.11
G	710+65.78	17.33	579.03	579.17
H	710+75.78	17.33	579.11	579.22
I	710+85.78	17.33	579.18	579.26
J	710+95.78	17.33	579.24	579.29
K	711+05.78	17.33	579.30	579.33
℄ Brg. Pier 1	711+15.78	17.33	579.36	579.38
L	711+25.78	17.33	579.41	579.44
M	711+35.78	17.33	579.45	579.50
N	711+45.78	17.33	579.49	579.56
O	711+55.78	17.33	579.53	579.62
P	711+65.78	17.33	579.55	579.68
Q	711+75.78	17.33	579.58	579.72
R	711+85.78	17.33	579.60	579.75
S	711+95.78	17.33	579.61	579.76
T	712+05.78	17.33	579.62	579.76
U	712+15.78	17.33	579.62	579.75
V	712+25.78	17.33	579.62	579.72
W	712+35.78	17.33	579.61	579.68
X	712+45.78	17.33	579.60	579.65
Y	712+55.78	17.33	579.58	579.61
℄ Brg. Pier 2	712+66.78	17.33	579.56	579.58
Z	712+76.78	17.33	579.53	579.56
AA	712+86.78	17.33	579.50	579.55
AB	712+96.78	17.33	579.46	579.54
AC	713+06.78	17.33	579.41	579.53
AD	713+16.78	17.33	579.36	579.52
AE	713+26.78	17.33	579.31	579.49
AF	713+36.78	17.33	579.25	579.44
AG	713+46.78	17.33	579.19	579.38
AH	713+56.78	17.33	579.12	579.30
AI	713+66.78	17.33	579.04	579.20
AJ	713+76.78	17.33	578.96	579.09
AK	713+86.78	17.33	578.88	578.98
AL	713+96.78	17.33	578.78	578.85
AM	714+06.78	17.33	578.69	578.73
℄ Brg. Pier 3	714+17.78	17.33	578.58	578.60
AN	714+27.78	17.33	578.47	578.49
AO	714+37.78	17.33	578.36	578.39
AP	714+47.78	17.33	578.24	578.29
AQ	714+57.78	17.33	578.12	578.19
AR	714+67.78	17.33	577.99	578.08
AS	714+77.78	17.33	577.86	577.96
AT	714+87.78	17.33	577.72	577.82
AU	714+97.78	17.33	577.58	577.67
AV	715+07.78	17.33	577.43	577.51
AW	715+17.78	17.33	577.28	577.33
℄ Brg. E. Abut.	715+27.28	17.33	577.13	577.15
Bk. E. Abut.	715+29.73	17.33	577.09	577.11

GIRDER 15

Location	Station	Offset from ℄ I-80	Theoretical Grade Elevations	Theoretical Grade Elevations Adjusted For Dead Load Deflection & Grinding
Bk. W. Abut.	709+92.06	24.25	578.45	578.47
℄ Brg. W. Abut.	709+94.52	24.25	578.48	578.50
A	710+04.52	24.25	578.59	578.65
B	710+14.52	24.25	578.70	578.80
C	710+24.52	24.25	578.80	578.93
D	710+34.52	24.25	578.90	579.04
E	710+44.52	24.25	578.99	579.14
F	710+54.52	24.25	579.08	579.22
G	710+64.52	24.25	579.16	579.28
H	710+74.52	24.25	579.24	579.33
I	710+84.52	24.25	579.31	579.38
J	710+94.52	24.25	579.37	579.42
K	711+04.52	24.25	579.43	579.46
℄ Brg. Pier 1	711+14.52	24.25	579.49	579.51
L	711+24.52	24.25	579.54	579.57
M	711+34.52	24.25	579.58	579.63
N	711+44.52	24.25	579.63	579.69
O	711+54.52	24.25	579.66	579.75
P	711+64.52	24.25	579.69	579.80
Q	711+74.52	24.25	579.71	579.84
R	711+84.52	24.25	579.73	579.87
S	711+94.52	24.25	579.75	579.88
T	712+04.52	24.25	579.76	579.88
U	712+14.52	24.25	579.76	579.87
V	712+24.52	24.25	579.76	579.85
W	712+34.52	24.25	579.75	579.82
X	712+44.52	24.25	579.74	579.78
Y	712+54.52	24.25	579.72	579.75
℄ Brg. Pier 2	712+65.52	24.25	579.70	579.72
Z	712+75.52	24.25	579.67	579.70
AA	712+85.52	24.25	579.64	579.69
AB	712+95.52	24.25	579.60	579.68
AC	713+05.52	24.25	579.56	579.67
AD	713+15.52	24.25	579.51	579.64
AE	713+25.52	24.25	579.46	579.61
AF	713+35.52	24.25	579.40	579.57
AG	713+45.52	24.25	579.33	579.50
AH	713+55.52	24.25	579.26	579.43
AI	713+65.52	24.25	579.19	579.33
AJ	713+75.52	24.25	579.11	579.23
AK	713+85.52	24.25	579.02	579.11
AL	713+95.52	24.25	578.93	579.00
AM	714+05.52	24.25	578.84	578.88
℄ Brg. Pier 3	714+16.52	24.25	578.73	578.75
AN	714+26.52	24.25	578.62	578.64
AO	714+36.52	24.25	578.51	578.54
AP	714+46.52	24.25	578.40	578.44
AQ	714+56.52	24.25	578.27	578.34
AR	714+66.52	24.25	578.15	578.23
AS	714+76.52	24.25	578.02	578.10
AT	714+86.52	24.25	577.88	577.97
AU	714+96.52	24.25	577.74	577.82
AV	715+06.52	24.25	577.59	577.66
AW	715+16.52	24.25	577.44	577.48
℄ Brg. E. Abut.	715+26.02	24.25	577.29	577.31
Bk. E. Abut.	715+28.47	24.25	577.25	577.27

Notes:

All Elevations and Offsets are in feet.

FOR INFORMATION ONLY

MODEL: SHEET
FILE NAME: C:\TRANSYSTEMS\PW_LOCAL\TRANSYSTEMS-PW-01\D0136620\80C53_I80-SHT-017-TOS9.DGN

10/28/2025

exp.

USER NAME =	DESIGNED - CCE	REVISED -	
	CHECKED - VCP	REVISED -	
PLOT SCALE =	DRAWN - MTR	REVISED -	
PLOT DATE =	CHECKED - CCE	REVISED -	

STATE OF ILLINOIS
DEPARTMENT OF TRANSPORTATION

TOP OF SLAB ELEVATIONS 9
STRUCTURE NO. 099-0902 (EB)

SHEET S-15 OF S-51 SHEETS

F.A.I. RTE.	SECTION	COUNTY	TOTAL SHEETS	SHEET NO.
80	2025-2113-B	WILL	53	17
		CONTRACT NO. 80C53		
	ILLINOIS	FED. AID PROJECT		

EB NORTH CROSS SLOPE BREAK POINT

Location	Station	Offset from ℄ I-80	Theoretical Grade Elevations	Theoretical Grade Elevations Adjusted For Dead Load Deflection & Grinding
Bk. W. Abut.	709+91.83	25.50	578.47	578.49
℄ Brg. W. Abut.	709+94.29	25.50	578.50	578.52
A	710+04.29	25.50	578.61	578.68
B	710+14.29	25.50	578.72	578.82
C	710+24.29	25.50	578.82	578.95
D	710+34.29	25.50	578.92	579.06
E	710+44.29	25.50	579.01	579.16
F	710+54.29	25.50	579.10	579.24
G	710+64.29	25.50	579.18	579.30
H	710+74.29	25.50	579.26	579.36
I	710+84.29	25.50	579.33	579.40
J	710+94.29	25.50	579.40	579.44
K	711+04.29	25.50	579.46	579.49
℄ Brg. Pier 1	711+14.29	25.50	579.51	579.53
L	711+24.29	25.50	579.56	579.59
M	711+34.29	25.50	579.61	579.65
N	711+44.29	25.50	579.65	579.71
O	711+54.29	25.50	579.68	579.77
P	711+64.29	25.50	579.71	579.82
Q	711+74.29	25.50	579.74	579.87
R	711+84.29	25.50	579.76	579.89
S	711+94.29	25.50	579.77	579.91
T	712+04.29	25.50	579.78	579.91
U	712+14.29	25.50	579.79	579.89
V	712+24.29	25.50	579.78	579.87
W	712+34.29	25.50	579.78	579.84
X	712+44.29	25.50	579.77	579.81
Y	712+54.29	25.50	579.75	579.78
℄ Brg. Pier 2	712+65.29	25.50	579.73	579.75
Z	712+75.29	25.50	579.70	579.73
AA	712+85.29	25.50	579.66	579.72
AB	712+95.29	25.50	579.63	579.70
AC	713+05.29	25.50	579.58	579.69
AD	713+15.29	25.50	579.54	579.67
AE	713+25.29	25.50	579.48	579.64
AF	713+35.29	25.50	579.42	579.59
AG	713+45.29	25.50	579.36	579.53
AH	713+55.29	25.50	579.29	579.45
AI	713+65.29	25.50	579.22	579.36
AJ	713+75.29	25.50	579.14	579.26
AK	713+85.29	25.50	579.05	579.14
AL	713+95.29	25.50	578.96	579.02
AM	714+05.29	25.50	578.87	578.90
℄ Brg. Pier 3	714+16.29	25.50	578.76	578.78
AN	714+26.29	25.50	578.65	578.67
AO	714+36.29	25.50	578.54	578.57
AP	714+46.29	25.50	578.42	578.47
AQ	714+56.29	25.50	578.30	578.36
AR	714+66.29	25.50	578.18	578.25
AS	714+76.29	25.50	578.04	578.13
AT	714+86.29	25.50	577.91	578.00
AU	714+96.29	25.50	577.76	577.85
AV	715+06.29	25.50	577.62	577.68
AW	715+16.29	25.50	577.46	577.51
℄ Brg. E. Abut.	715+25.79	25.50	577.31	577.34
Bk. E. Abut.	715+28.24	25.50	577.28	577.30

EB STAGE CONSTRUCTION JOINT

Location	Station	Offset from ℄ I-80	Theoretical Grade Elevations	Theoretical Grade Elevations Adjusted For Dead Load Deflection & Grinding
Bk. W. Abut.	709+91.47	27.50	578.50	578.52
℄ Brg. W. Abut.	709+93.92	27.50	578.53	578.55
A	710+03.92	27.50	578.64	578.70
B	710+13.92	27.50	578.75	578.85
C	710+23.92	27.50	578.85	578.98
D	710+33.92	27.50	578.95	579.09
E	710+43.92	27.50	579.04	579.19
F	710+53.92	27.50	579.13	579.27
G	710+63.92	27.50	579.21	579.33
H	710+73.92	27.50	579.29	579.38
I	710+83.92	27.50	579.36	579.43
J	710+93.92	27.50	579.42	579.47
K	711+03.92	27.50	579.49	579.52
℄ Brg. Pier 1	711+13.92	27.50	579.54	579.56
L	711+23.92	27.50	579.59	579.62
M	711+33.92	27.50	579.64	579.68
N	711+43.92	27.50	579.68	579.74
O	711+53.92	27.50	579.71	579.80
P	711+63.92	27.50	579.74	579.85
Q	711+73.92	27.50	579.77	579.90
R	711+83.92	27.50	579.79	579.92
S	711+93.92	27.50	579.80	579.94
T	712+03.92	27.50	579.81	579.94
U	712+13.92	27.50	579.82	579.92
V	712+23.92	27.50	579.81	579.90
W	712+33.92	27.50	579.81	579.87
X	712+43.92	27.50	579.80	579.84
Y	712+53.92	27.50	579.78	579.81
℄ Brg. Pier 2	712+64.92	27.50	579.76	579.78
Z	712+74.92	27.50	579.73	579.76
AA	712+84.92	27.50	579.70	579.75
AB	712+94.92	27.50	579.66	579.74
AC	713+04.92	27.50	579.62	579.72
AD	713+14.92	27.50	579.57	579.70
AE	713+24.92	27.50	579.51	579.67
AF	713+34.92	27.50	579.46	579.62
AG	713+44.92	27.50	579.39	579.56
AH	713+54.92	27.50	579.32	579.49
AI	713+64.92	27.50	579.25	579.39
AJ	713+74.92	27.50	579.17	579.29
AK	713+84.92	27.50	579.08	579.18
AL	713+94.92	27.50	579.00	579.06
AM	714+04.92	27.50	578.90	578.94
℄ Brg. Pier 3	714+15.92	27.50	578.79	578.81
AN	714+25.92	27.50	578.68	578.71
AO	714+35.92	27.50	578.57	578.60
AP	714+45.92	27.50	578.46	578.50
AQ	714+55.92	27.50	578.34	578.40
AR	714+65.92	27.50	578.21	578.29
AS	714+75.92	27.50	578.08	578.17
AT	714+85.92	27.50	577.94	578.03
AU	714+95.92	27.50	577.80	577.88
AV	715+05.92	27.50	577.65	577.72
AW	715+15.92	27.50	577.50	577.55
℄ Brg. E. Abut.	715+25.42	27.50	577.35	577.37
Bk. E. Abut.	715+27.88	27.50	577.31	577.33

GIRDER 16

Location	Station	Offset from ℄ I-80	Theoretical Grade Elevations	Theoretical Grade Elevations Adjusted For Dead Load Deflection & Grinding
Bk. W. Abut.	709+90.80	31.17	578.55	578.57
℄ Brg. W. Abut.	709+93.25	31.17	578.57	578.60
A	710+03.25	31.17	578.69	578.75
B	710+13.25	31.17	578.80	578.89
C	710+23.25	31.17	578.90	579.02
D	710+33.25	31.17	579.00	579.14
E	710+43.25	31.17	579.09	579.24
F	710+53.25	31.17	579.18	579.32
G	710+63.25	31.17	579.26	579.38
H	710+73.25	31.17	579.34	579.43
I	710+83.25	31.17	579.41	579.48
J	710+93.25	31.17	579.47	579.52
K	711+03.25	31.17	579.54	579.57
℄ Brg. Pier 1	711+13.25	31.17	579.59	579.61
L	711+23.25	31.17	579.64	579.67
M	711+33.25	31.17	579.69	579.73
N	711+43.25	31.17	579.73	579.79
O	711+53.25	31.17	579.77	579.85
P	711+63.25	31.17	579.80	579.91
Q	711+73.25	31.17	579.82	579.95
R	711+83.25	31.17	579.84	579.98
S	711+93.25	31.17	579.86	579.99
T	712+03.25	31.17	579.87	579.99
U	712+13.25	31.17	579.87	579.98
V	712+23.25	31.17	579.87	579.96
W	712+33.25	31.17	579.86	579.93
X	712+43.25	31.17	579.85	579.90
Y	712+53.25	31.17	579.84	579.86
℄ Brg. Pier 2	712+64.25	31.17	579.81	579.83
Z	712+74.25	31.17	579.79	579.82
AA	712+84.25	31.17	579.75	579.80
AB	712+94.25	31.17	579.72	579.79
AC	713+04.25	31.17	579.67	579.78
AD	713+14.25	31.17	579.63	579.76
AE	713+24.25	31.17	579.57	579.73
AF	713+34.25	31.17	579.51	579.68
AG	713+44.25	31.17	579.45	579.62
AH	713+54.25	31.17	579.38	579.55
AI	713+64.25	31.17	579.31	579.45
AJ	713+74.25	31.17	579.23	579.35
AK	713+84.25	31.17	579.15	579.24
AL	713+94.25	31.17	579.06	579.12
AM	714+04.25	31.17	578.96	579.00
℄ Brg. Pier 3	714+15.25	31.17	578.85	578.87
AN	714+25.25	31.17	578.75	578.77
AO	714+35.25	31.17	578.64	578.67
AP	714+45.25	31.17	578.52	578.57
AQ	714+55.25	31.17	578.40	578.46
AR	714+65.25	31.17	578.27	578.35
AS	714+75.25	31.17	578.14	578.23
AT	714+85.25	31.17	578.01	578.10
AU	714+95.25	31.17	577.86	577.95
AV	715+05.25	31.17	577.72	577.78
AW	715+15.25	31.17	577.57	577.61
℄ Brg. E. Abut.	715+24.75	31.17	577.42	577.44
Bk. E. Abut.	715+27.21	31.17	577.38	577.40

Notes:

All Elevations and Offsets are in feet.

FOR INFORMATION ONLY

MODEL: SHEET
FILE NAME: C:\TRANSYSTEMS\PW_LOCAL\TRANSYSTEMS-PW-01\D0136620\80C53_I80-SHT-018-TOS10.DGN

10/28/2025

exp.

USER NAME =	DESIGNED - CCE	REVISED -	
	CHECKED - VCP	REVISED -	
PLOT SCALE =	DRAWN - MTR	REVISED -	
PLOT DATE =	CHECKED - CCE	REVISED -	

STATE OF ILLINOIS
DEPARTMENT OF TRANSPORTATION

TOP OF SLAB ELEVATIONS 10
STRUCTURE NO. 099-0902 (EB)

SHEET S-16 OF S-51 SHEETS

F.A.I. RTE.	SECTION	COUNTY	TOTAL SHEETS	SHEET NO.
80	2025-2113-B	WILL	53	18
		CONTRACT NO. 80C53		
	ILLINOIS	FED. AID PROJECT		

EB CROWN

Location	Station	Offset from ℄ I-80	Theoretical Grade Elevations	Theoretical Grade Elevations Adjusted For Dead Load Deflection & Grinding
Bk. W. Abut.	709+89.64	37.50	578.63	578.65
℄ Brg. W. Abut.	709+92.10	37.50	578.66	578.68
A	710+02.10	37.50	578.77	578.83
B	710+12.10	37.50	578.88	578.98
C	710+22.10	37.50	578.98	579.11
D	710+32.10	37.50	579.08	579.22
E	710+42.10	37.50	579.17	579.32
F	710+52.10	37.50	579.26	579.40
G	710+62.10	37.50	579.34	579.47
H	710+72.10	37.50	579.42	579.52
I	710+82.10	37.50	579.49	579.57
J	710+92.10	37.50	579.56	579.61
K	711+02.10	37.50	579.62	579.65
℄ Brg. Pier 1	711+12.10	37.50	579.68	579.70
L	711+22.10	37.50	579.73	579.76
M	711+32.10	37.50	579.78	579.82
N	711+42.10	37.50	579.82	579.88
O	711+52.10	37.50	579.86	579.94
P	711+62.10	37.50	579.89	580.00
Q	711+72.10	37.50	579.91	580.04
R	711+82.10	37.50	579.93	580.07
S	711+92.10	37.50	579.95	580.09
T	712+02.10	37.50	579.96	580.09
U	712+12.10	37.50	579.97	580.07
V	712+22.10	37.50	579.97	580.05
W	712+32.10	37.50	579.96	580.02
X	712+42.10	37.50	579.95	579.99
Y	712+52.10	37.50	579.93	579.96
℄ Brg. Pier 2	712+63.10	37.50	579.91	579.93
Z	712+73.10	37.50	579.88	579.92
AA	712+83.10	37.50	579.85	579.90
AB	712+93.10	37.50	579.82	579.89
AC	713+03.10	37.50	579.77	579.88
AD	713+13.10	37.50	579.73	579.86
AE	713+23.10	37.50	579.67	579.83
AF	713+33.10	37.50	579.62	579.79
AG	713+43.10	37.50	579.55	579.73
AH	713+53.10	37.50	579.49	579.65
AI	713+63.10	37.50	579.41	579.56
AJ	713+73.10	37.50	579.33	579.45
AK	713+83.10	37.50	579.25	579.34
AL	713+93.10	37.50	579.16	579.22
AM	714+03.10	37.50	579.07	579.11
℄ Brg. Pier 3	714+14.10	37.50	578.96	578.98
AN	714+24.10	37.50	578.85	578.87
AO	714+34.10	37.50	578.74	578.77
AP	714+44.10	37.50	578.63	578.67
AQ	714+54.10	37.50	578.51	578.57
AR	714+64.10	37.50	578.38	578.46
AS	714+74.10	37.50	578.25	578.34
AT	714+84.10	37.50	578.12	578.21
AU	714+94.10	37.50	577.98	578.06
AV	715+04.10	37.50	577.83	577.90
AW	715+14.10	37.50	577.68	577.72
℄ Brg. E. Abut.	715+23.60	37.50	577.53	577.55
Bk. E. Abut.	715+26.06	37.50	577.49	577.51

GIRDER 17

Location	Station	Offset from ℄ I-80	Theoretical Grade Elevations	Theoretical Grade Elevations Adjusted For Dead Load Deflection & Grinding
Bk. W. Abut.	709+89.54	38.08	578.62	578.64
℄ Brg. W. Abut.	709+91.99	38.08	578.65	578.67
A	710+01.99	38.08	578.76	578.82
B	710+11.99	38.08	578.87	578.97
C	710+21.99	38.08	578.97	579.10
D	710+31.99	38.08	579.07	579.21
E	710+41.99	38.08	579.16	579.31
F	710+51.99	38.08	579.25	579.39
G	710+61.99	38.08	579.34	579.46
H	710+71.99	38.08	579.41	579.51
I	710+81.99	38.08	579.49	579.56
J	710+91.99	38.08	579.55	579.60
K	711+01.99	38.08	579.61	579.64
℄ Brg. Pier 1	711+11.99	38.08	579.67	579.69
L	711+21.99	38.08	579.72	579.75
M	711+31.99	38.08	579.77	579.81
N	711+41.99	38.08	579.81	579.87
O	711+51.99	38.08	579.85	579.94
P	711+61.99	38.08	579.88	579.99
Q	711+71.99	38.08	579.90	580.03
R	711+81.99	38.08	579.93	580.06
S	711+91.99	38.08	579.94	580.08
T	712+01.99	38.08	579.95	580.08
U	712+11.99	38.08	579.96	580.07
V	712+21.99	38.08	579.96	580.04
W	712+31.99	38.08	579.95	580.01
X	712+41.99	38.08	579.94	579.98
Y	712+51.99	38.08	579.93	579.95
℄ Brg. Pier 2	712+62.99	38.08	579.90	579.92
Z	712+72.99	38.08	579.88	579.91
AA	712+82.99	38.08	579.84	579.90
AB	712+92.99	38.08	579.81	579.89
AC	713+02.99	38.08	579.77	579.87
AD	713+12.99	38.08	579.72	579.85
AE	713+22.99	38.08	579.67	579.82
AF	713+32.99	38.08	579.61	579.78
AG	713+42.99	38.08	579.55	579.72
AH	713+52.99	38.08	579.48	579.64
AI	713+62.99	38.08	579.40	579.55
AJ	713+72.99	38.08	579.33	579.45
AK	713+82.99	38.08	579.24	579.33
AL	713+92.99	38.08	579.15	579.21
AM	714+02.99	38.08	579.06	579.10
℄ Brg. Pier 3	714+13.99	38.08	578.95	578.97
AN	714+23.99	38.08	578.85	578.87
AO	714+33.99	38.08	578.74	578.77
AP	714+43.99	38.08	578.62	578.67
AQ	714+53.99	38.08	578.50	578.56
AR	714+63.99	38.08	578.38	578.45
AS	714+73.99	38.08	578.25	578.33
AT	714+83.99	38.08	578.11	578.20
AU	714+93.99	38.08	577.97	578.05
AV	715+03.99	38.08	577.82	577.89
AW	715+13.99	38.08	577.67	577.72
℄ Brg. E. Abut.	715+23.49	38.08	577.52	577.54
Bk. E. Abut.	715+25.95	38.08	577.48	577.50

GIRDER 18

Location	Station	Offset from ℄ I-80	Theoretical Grade Elevations	Theoretical Grade Elevations Adjusted For Dead Load Deflection & Grinding
Bk. W. Abut.	709+88.28	45.00	578.50	578.52
℄ Brg. W. Abut.	709+90.73	45.00	578.53	578.55
A	710+00.73	45.00	578.64	578.70
B	710+10.73	45.00	578.75	578.85
C	710+20.73	45.00	578.86	578.98
D	710+30.73	45.00	578.96	579.10
E	710+40.73	45.00	579.05	579.20
F	710+50.73	45.00	579.14	579.28
G	710+60.73	45.00	579.22	579.34
H	710+70.73	45.00	579.30	579.40
I	710+80.73	45.00	579.37	579.44
J	710+90.73	45.00	579.44	579.49
K	711+00.73	45.00	579.50	579.53
℄ Brg. Pier 1	711+10.73	45.00	579.56	579.58
L	711+20.73	45.00	579.61	579.64
M	711+30.73	45.00	579.66	579.70
N	711+40.73	45.00	579.70	579.77
O	711+50.73	45.00	579.74	579.83
P	711+60.73	45.00	579.77	579.88
Q	711+70.73	45.00	579.80	579.93
R	711+80.73	45.00	579.82	579.96
S	711+90.73	45.00	579.84	579.97
T	712+00.73	45.00	579.85	579.97
U	712+10.73	45.00	579.85	579.96
V	712+20.73	45.00	579.85	579.94
W	712+30.73	45.00	579.85	579.91
X	712+40.73	45.00	579.84	579.88
Y	712+50.73	45.00	579.82	579.85
℄ Brg. Pier 2	712+61.73	45.00	579.80	579.82
Z	712+71.73	45.00	579.78	579.81
AA	712+81.73	45.00	579.74	579.80
AB	712+91.73	45.00	579.71	579.79
AC	713+01.73	45.00	579.67	579.78
AD	713+11.73	45.00	579.62	579.76
AE	713+21.73	45.00	579.57	579.73
AF	713+31.73	45.00	579.51	579.68
AG	713+41.73	45.00	579.45	579.62
AH	713+51.73	45.00	579.38	579.55
AI	713+61.73	45.00	579.31	579.46
AJ	713+71.73	45.00	579.23	579.35
AK	713+81.73	45.00	579.15	579.24
AL	713+91.73	45.00	579.06	579.12
AM	714+01.73	45.00	578.97	579.01
℄ Brg. Pier 3	714+12.73	45.00	578.86	578.88
AN	714+22.73	45.00	578.76	578.78
AO	714+32.73	45.00	578.65	578.68
AP	714+42.73	45.00	578.53	578.58
AQ	714+52.73	45.00	578.41	578.48
AR	714+62.73	45.00	578.29	578.37
AS	714+72.73	45.00	578.16	578.25
AT	714+82.73	45.00	578.02	578.11
AU	714+92.73	45.00	577.88	577.97
AV	715+02.73	45.00	577.74	577.80
AW	715+12.73	45.00	577.59	577.63
℄ Brg. E. Abut.	715+22.23	45.00	577.44	577.46
Bk. E. Abut.	715+24.69	45.00	577.40	577.42

Notes:

All Elevations and Offsets are in feet.

FOR INFORMATION ONLY

MODEL: SHEET
FILE NAME: C:\TRANSYSTEMS\PW_LOCAL\TRANSYSTEMS-PW-01\D0136620\80C53_I80-SHT-019-TOS11.DGN

10/28/2025

exp.

USER NAME =	DESIGNED - CCE	REVISED -	
	CHECKED - VCP	REVISED -	
PLOT SCALE =	DRAWN - MTR	REVISED -	
PLOT DATE =	CHECKED - CCE	REVISED -	

STATE OF ILLINOIS
DEPARTMENT OF TRANSPORTATION

TOP OF SLAB ELEVATIONS 11
STRUCTURE NO. 099-0902 (EB)

SHEET S-17 OF S-51 SHEETS

F.A.I. RTE.	SECTION	COUNTY	TOTAL SHEETS	SHEET NO.
80	2025-2113-B	WILL	53	19
		CONTRACT NO. 80C53		
	ILLINOIS	FED. AID PROJECT		

EB SOUTH CROSS SLOPE BREAK POINT

Location	Station	Offset from ℄ I-80	Theoretical Grade Elevations	Theoretical Grade Elevations Adjusted For Dead Load Deflection & Grinding
Bk. W. Abut.	709+87.45	49.50	578.42	578.44
℄ Brg. W. Abut.	709+89.91	49.50	578.45	578.47
A	709+99.91	49.50	578.57	578.63
B	710+09.91	49.50	578.68	578.77
C	710+19.91	49.50	578.78	578.91
D	710+29.91	49.50	578.88	579.02
E	710+39.91	49.50	578.97	579.12
F	710+49.91	49.50	579.06	579.20
G	710+59.91	49.50	579.15	579.27
H	710+69.91	49.50	579.23	579.32
I	710+79.91	49.50	579.30	579.37
J	710+89.91	49.50	579.37	579.42
K	710+99.91	49.50	579.43	579.46
℄ Brg. Pier 1	711+09.91	49.50	579.49	579.51
L	711+19.91	49.50	579.54	579.57
M	711+29.91	49.50	579.59	579.63
N	711+39.91	49.50	579.63	579.70
O	711+49.91	49.50	579.67	579.76
P	711+59.91	49.50	579.70	579.81
Q	711+69.91	49.50	579.73	579.86
R	711+79.91	49.50	579.75	579.89
S	711+89.91	49.50	579.77	579.90
T	711+99.91	49.50	579.78	579.91
U	712+09.91	49.50	579.78	579.89
V	712+19.91	49.50	579.79	579.87
W	712+29.91	49.50	579.78	579.84
X	712+39.91	49.50	579.77	579.81
Y	712+49.91	49.50	579.76	579.78
℄ Brg. Pier 2	712+60.91	49.50	579.74	579.76
Z	712+70.91	49.50	579.71	579.74
AA	712+80.91	49.50	579.68	579.73
AB	712+90.91	49.50	579.64	579.72
AC	713+00.91	49.50	579.60	579.71
AD	713+10.91	49.50	579.56	579.69
AE	713+20.91	49.50	579.51	579.66
AF	713+30.91	49.50	579.45	579.62
AG	713+40.91	49.50	579.39	579.56
AH	713+50.91	49.50	579.32	579.48
AI	713+60.91	49.50	579.25	579.39
AJ	713+70.91	49.50	579.17	579.29
AK	713+80.91	49.50	579.09	579.18
AL	713+90.91	49.50	579.00	579.06
AM	714+00.91	49.50	578.91	578.95
℄ Brg. Pier 3	714+11.91	49.50	578.80	578.82
AN	714+21.91	49.50	578.70	578.72
AO	714+31.91	49.50	578.59	578.62
AP	714+41.91	49.50	578.47	578.52
AQ	714+51.91	49.50	578.36	578.42
AR	714+61.91	49.50	578.23	578.31
AS	714+71.91	49.50	578.10	578.19
AT	714+81.91	49.50	577.97	578.06
AU	714+91.91	49.50	577.83	577.91
AV	715+01.91	49.50	577.68	577.75
AW	715+11.91	49.50	577.53	577.58
℄ Brg. E. Abut.	715+21.41	49.50	577.38	577.41
Bk. E. Abut.	715+23.87	49.50	577.35	577.37

GIRDER 19

Location	Station	Offset from ℄ I-80	Theoretical Grade Elevations	Theoretical Grade Elevations Adjusted For Dead Load Deflection & Grinding
Bk. W. Abut.	709+87.01	51.92	578.37	578.39
℄ Brg. W. Abut.	709+89.47	51.92	578.40	578.42
A	709+99.47	51.92	578.51	578.57
B	710+09.47	51.92	578.62	578.72
C	710+19.47	51.92	578.73	578.85
D	710+29.47	51.92	578.83	578.97
E	710+39.47	51.92	578.92	579.07
F	710+49.47	51.92	579.01	579.15
G	710+59.47	51.92	579.10	579.22
H	710+69.47	51.92	579.17	579.27
I	710+79.47	51.92	579.25	579.32
J	710+89.47	51.92	579.32	579.36
K	710+99.47	51.92	579.38	579.41
℄ Brg. Pier 1	711+09.47	51.92	579.44	579.46
L	711+19.47	51.92	579.49	579.52
M	711+29.47	51.92	579.54	579.58
N	711+39.47	51.92	579.58	579.65
O	711+49.47	51.92	579.62	579.71
P	711+59.47	51.92	579.65	579.76
Q	711+69.47	51.92	579.68	579.81
R	711+79.47	51.92	579.70	579.84
S	711+89.47	51.92	579.72	579.85
T	711+99.47	51.92	579.73	579.86
U	712+09.47	51.92	579.74	579.85
V	712+19.47	51.92	579.74	579.82
W	712+29.47	51.92	579.73	579.80
X	712+39.47	51.92	579.72	579.77
Y	712+49.47	51.92	579.71	579.74
℄ Brg. Pier 2	712+60.47	51.92	579.69	579.71
Z	712+70.47	51.92	579.66	579.70
AA	712+80.47	51.92	579.63	579.68
AB	712+90.47	51.92	579.60	579.68
AC	713+00.47	51.92	579.56	579.66
AD	713+10.47	51.92	579.51	579.65
AE	713+20.47	51.92	579.46	579.62
AF	713+30.47	51.92	579.40	579.57
AG	713+40.47	51.92	579.34	579.51
AH	713+50.47	51.92	579.28	579.44
AI	713+60.47	51.92	579.20	579.35
AJ	713+70.47	51.92	579.13	579.25
AK	713+80.47	51.92	579.04	579.13
AL	713+90.47	51.92	578.96	579.02
AM	714+00.47	51.92	578.86	578.90
℄ Brg. Pier 3	714+11.47	51.92	578.76	578.78
AN	714+21.47	51.92	578.65	578.67
AO	714+31.47	51.92	578.55	578.58
AP	714+41.47	51.92	578.43	578.48
AQ	714+51.47	51.92	578.31	578.38
AR	714+61.47	51.92	578.19	578.27
AS	714+71.47	51.92	578.06	578.15
AT	714+81.47	51.92	577.92	578.01
AU	714+91.47	51.92	577.78	577.87
AV	715+01.47	51.92	577.64	577.71
AW	715+11.47	51.92	577.49	577.54
℄ Brg. E. Abut.	715+20.97	51.92	577.34	577.36
Bk. E. Abut.	715+23.43	51.92	577.30	577.32

GIRDER 20

Location	Station	Offset from ℄ I-80	Theoretical Grade Elevations	Theoretical Grade Elevations Adjusted For Dead Load Deflection & Grinding
Bk. W. Abut.	709+85.75	58.83	578.21	578.24
℄ Brg. W. Abut.	709+88.21	58.83	578.24	578.26
A	709+98.21	58.83	578.36	578.43
B	710+08.21	58.83	578.47	578.58
C	710+18.21	58.83	578.58	578.72
D	710+28.21	58.83	578.68	578.84
E	710+38.21	58.83	578.77	578.94
F	710+48.21	58.83	578.86	579.02
G	710+58.21	58.83	578.95	579.08
H	710+68.21	58.83	579.03	579.14
I	710+78.21	58.83	579.10	579.18
J	710+88.21	58.83	579.17	579.22
K	710+98.21	58.83	579.23	579.27
℄ Brg. Pier 1	711+08.21	58.83	579.29	579.31
L	711+18.21	58.83	579.35	579.38
M	711+28.21	58.83	579.40	579.44
N	711+38.21	58.83	579.44	579.51
O	711+48.21	58.83	579.48	579.58
P	711+58.21	58.83	579.51	579.63
Q	711+68.21	58.83	579.54	579.68
R	711+78.21	58.83	579.56	579.71
S	711+88.21	58.83	579.58	579.73
T	711+98.21	58.83	579.59	579.73
U	712+08.21	58.83	579.60	579.72
V	712+18.21	58.83	579.60	579.70
W	712+28.21	58.83	579.60	579.67
X	712+38.21	58.83	579.59	579.63
Y	712+48.21	58.83	579.57	579.60
℄ Brg. Pier 2	712+59.21	58.83	579.55	579.57
Z	712+69.21	58.83	579.53	579.56
AA	712+79.21	58.83	579.50	579.55
AB	712+89.21	58.83	579.46	579.55
AC	712+99.21	58.83	579.42	579.55
AD	713+09.21	58.83	579.38	579.53
AE	713+19.21	58.83	579.33	579.51
AF	713+29.21	58.83	579.27	579.46
AG	713+39.21	58.83	579.21	579.41
AH	713+49.21	58.83	579.15	579.33
AI	713+59.21	58.83	579.07	579.24
AJ	713+69.21	58.83	579.00	579.13
AK	713+79.21	58.83	578.92	579.02
AL	713+89.21	58.83	578.83	578.90
AM	713+99.21	58.83	578.74	578.78
℄ Brg. Pier 3	714+10.21	58.83	578.63	578.65
AN	714+20.21	58.83	578.53	578.55
AO	714+30.21	58.83	578.42	578.45
AP	714+40.21	58.83	578.31	578.36
AQ	714+50.21	58.83	578.19	578.26
AR	714+60.21	58.83	578.07	578.15
AS	714+70.21	58.83	577.94	578.04
AT	714+80.21	58.83	577.80	577.90
AU	714+90.21	58.83	577.66	577.76
AV	715+00.21	58.83	577.52	577.59
AW	715+10.21	58.83	577.37	577.42
℄ Brg. E. Abut.	715+19.71	58.83	577.22	577.25
Bk. E. Abut.	715+22.17	58.83	577.19	577.21

Notes:

All Elevations and Offsets are in feet.

FOR INFORMATION ONLY

MODEL: SHEET
FILE NAME: C:\TRANSYSTEMS\PW_LOCAL\TRANSYSTEMS-PW-01\D0136620\80C53_I80-SHT-020-TOS12.DGN

10/28/2025

exp.

USER NAME =	DESIGNED - CCE	REVISED -	
	CHECKED - VCP	REVISED -	
PLOT SCALE =	DRAWN - MTR	REVISED -	
PLOT DATE =	CHECKED - CCE	REVISED -	

STATE OF ILLINOIS
DEPARTMENT OF TRANSPORTATION

TOP OF SLAB ELEVATIONS 12
STRUCTURE NO. 099-0902 (EB)

SHEET S-18 OF S-51 SHEETS

F.A.I. RTE.	SECTION	COUNTY	TOTAL SHEETS	SHEET NO.
80	2025-2113-B	WILL	53	20
		CONTRACT NO. 80C53		
	ILLINOIS	FED. AID PROJECT		

EB SOUTH EDGE OF ROADWAY

Location	Station	Offset from ℄ I-80	Theoretical Grade Elevations	Theoretical Grade Elevations Adjusted For Dead Load Deflection & Grinding
Bk. W. Abut.	709+85.27	61.50	578.16	578.18
℄ Brg. W. Abut.	709+87.72	61.50	578.19	578.21
A	709+97.72	61.50	578.30	578.37
B	710+07.72	61.50	578.41	578.52
C	710+17.72	61.50	578.52	578.66
D	710+27.72	61.50	578.62	578.78
E	710+37.72	61.50	578.71	578.88
F	710+47.72	61.50	578.80	578.96
G	710+57.72	61.50	578.89	579.03
H	710+67.72	61.50	578.97	579.08
I	710+77.72	61.50	579.04	579.12
J	710+87.72	61.50	579.11	579.17
K	710+97.72	61.50	579.18	579.21
℄ Brg. Pier 1	711+07.72	61.50	579.24	579.26
L	711+17.72	61.50	579.29	579.32
M	711+27.72	61.50	579.34	579.39
N	711+37.72	61.50	579.38	579.45
O	711+47.72	61.50	579.42	579.52
P	711+57.72	61.50	579.46	579.58
Q	711+67.72	61.50	579.48	579.63
R	711+77.72	61.50	579.51	579.66
S	711+87.72	61.50	579.52	579.68
T	711+97.72	61.50	579.54	579.68
U	712+07.72	61.50	579.54	579.67
V	712+17.72	61.50	579.55	579.64
W	712+27.72	61.50	579.54	579.61
X	712+37.72	61.50	579.53	579.58
Y	712+47.72	61.50	579.52	579.55
℄ Brg. Pier 2	712+58.72	61.50	579.50	579.52
Z	712+68.72	61.50	579.48	579.51
AA	712+78.72	61.50	579.45	579.50
AB	712+88.72	61.50	579.41	579.50
AC	712+98.72	61.50	579.37	579.49
AD	713+08.72	61.50	579.33	579.48
AE	713+18.72	61.50	579.28	579.45
AF	713+28.72	61.50	579.22	579.41
AG	713+38.72	61.50	579.16	579.36
AH	713+48.72	61.50	579.10	579.28
AI	713+58.72	61.50	579.03	579.19
AJ	713+68.72	61.50	578.95	579.08
AK	713+78.72	61.50	578.87	578.97
AL	713+88.72	61.50	578.78	578.85
AM	713+98.72	61.50	578.69	578.73
℄ Brg. Pier 3	714+09.72	61.50	578.58	578.60
AN	714+19.72	61.50	578.48	578.50
AO	714+29.72	61.50	578.37	578.41
AP	714+39.72	61.50	578.26	578.31
AQ	714+49.72	61.50	578.14	578.21
AR	714+59.72	61.50	578.02	578.11
AS	714+69.72	61.50	577.89	577.99
AT	714+79.72	61.50	577.76	577.86
AU	714+89.72	61.50	577.62	577.71
AV	714+99.72	61.50	577.47	577.55
AW	715+09.72	61.50	577.33	577.37
℄ Brg. E. Abut.	715+19.22	61.50	577.18	577.20
Bk. E. Abut.	715+21.68	61.50	577.14	577.16

GIRDER 21

Location	Station	Offset from ℄ I-80	Theoretical Grade Elevations	Theoretical Grade Elevations Adjusted For Dead Load Deflection & Grinding
Bk. W. Abut.	709+84.49	65.75	578.06	578.08
℄ Brg. W. Abut.	709+86.95	65.75	578.09	578.11
A	709+96.95	65.75	578.21	578.27
B	710+06.95	65.75	578.32	578.43
C	710+16.95	65.75	578.42	578.57
D	710+26.95	65.75	578.53	578.68
E	710+36.95	65.75	578.62	578.79
F	710+46.95	65.75	578.71	578.87
G	710+56.95	65.75	578.80	578.93
H	710+66.95	65.75	578.88	578.99
I	710+76.95	65.75	578.95	579.03
J	710+86.95	65.75	579.02	579.08
K	710+96.95	65.75	579.09	579.12
℄ Brg. Pier 1	711+06.95	65.75	579.15	579.17
L	711+16.95	65.75	579.20	579.23
M	711+26.95	65.75	579.25	579.30
N	711+36.95	65.75	579.30	579.37
O	711+46.95	65.75	579.33	579.43
P	711+56.95	65.75	579.37	579.49
Q	711+66.95	65.75	579.40	579.54
R	711+76.95	65.75	579.42	579.57
S	711+86.95	65.75	579.44	579.59
T	711+96.95	65.75	579.45	579.59
U	712+06.95	65.75	579.46	579.58
V	712+16.95	65.75	579.46	579.56
W	712+26.95	65.75	579.46	579.53
X	712+36.95	65.75	579.45	579.50
Y	712+46.95	65.75	579.44	579.47
℄ Brg. Pier 2	712+57.95	65.75	579.42	579.44
Z	712+67.95	65.75	579.39	579.43
AA	712+77.95	65.75	579.36	579.42
AB	712+87.95	65.75	579.33	579.42
AC	712+97.95	65.75	579.29	579.41
AD	713+07.95	65.75	579.25	579.40
AE	713+17.95	65.75	579.20	579.37
AF	713+27.95	65.75	579.14	579.33
AG	713+37.95	65.75	579.08	579.28
AH	713+47.95	65.75	579.02	579.20
AI	713+57.95	65.75	578.95	579.11
AJ	713+67.95	65.75	578.87	579.00
AK	713+77.95	65.75	578.79	578.89
AL	713+87.95	65.75	578.70	578.77
AM	713+97.95	65.75	578.61	578.65
℄ Brg. Pier 3	714+08.95	65.75	578.51	578.53
AN	714+18.95	65.75	578.40	578.42
AO	714+28.95	65.75	578.30	578.33
AP	714+38.95	65.75	578.18	578.23
AQ	714+48.95	65.75	578.07	578.14
AR	714+58.95	65.75	577.94	578.03
AS	714+68.95	65.75	577.82	577.91
AT	714+78.95	65.75	577.68	577.78
AU	714+88.95	65.75	577.54	577.64
AV	714+98.95	65.75	577.40	577.47
AW	715+08.95	65.75	577.25	577.30
℄ Brg. E. Abut.	715+18.45	65.75	577.11	577.13
Bk. E. Abut.	715+20.90	65.75	577.07	577.09

GIRDER 22

Location	Station	Offset from ℄ I-80	Theoretical Grade Elevations	Theoretical Grade Elevations Adjusted For Dead Load Deflection & Grinding
Bk. W. Abut.	709+83.23	72.67	577.91	577.93
℄ Brg. W. Abut.	709+85.69	72.67	577.94	577.96
A	709+95.69	72.67	578.05	578.12
B	710+05.69	72.67	578.17	578.27
C	710+15.69	72.67	578.27	578.41
D	710+25.69	72.67	578.38	578.53
E	710+35.69	72.67	578.47	578.63
F	710+45.69	72.67	578.56	578.71
G	710+55.69	72.67	578.65	578.78
H	710+65.69	72.67	578.73	578.84
I	710+75.69	72.67	578.81	578.88
J	710+85.69	72.67	578.88	578.93
K	710+95.69	72.67	578.94	578.97
℄ Brg. Pier 1	711+05.69	72.67	579.00	579.02
L	711+15.69	72.67	579.06	579.09
M	711+25.69	72.67	579.11	579.15
N	711+35.69	72.67	579.15	579.22
O	711+45.69	72.67	579.19	579.29
P	711+55.69	72.67	579.23	579.35
Q	711+65.69	72.67	579.25	579.40
R	711+75.69	72.67	579.28	579.43
S	711+85.69	72.67	579.30	579.45
T	711+95.69	72.67	579.31	579.45
U	712+05.69	72.67	579.32	579.44
V	712+15.69	72.67	579.32	579.42
W	712+25.69	72.67	579.32	579.39
X	712+35.69	72.67	579.31	579.36
Y	712+45.69	72.67	579.30	579.33
℄ Brg. Pier 2	712+56.69	72.67	579.28	579.30
Z	712+66.69	72.67	579.26	579.29
AA	712+76.69	72.67	579.23	579.28
AB	712+86.69	72.67	579.20	579.28
AC	712+96.69	72.67	579.16	579.28
AD	713+06.69	72.67	579.11	579.26
AE	713+16.69	72.67	579.06	579.24
AF	713+26.69	72.67	579.01	579.20
AG	713+36.69	72.67	578.95	579.14
AH	713+46.69	72.67	578.89	579.07
AI	713+56.69	72.67	578.82	578.98
AJ	713+66.69	72.67	578.74	578.87
AK	713+76.69	72.67	578.66	578.76
AL	713+86.69	72.67	578.58	578.64
AM	713+96.69	72.67	578.49	578.53
℄ Brg. Pier 3	714+07.69	72.67	578.38	578.40
AN	714+17.69	72.67	578.28	578.30
AO	714+27.69	72.67	578.17	578.20
AP	714+37.69	72.67	578.06	578.11
AQ	714+47.69	72.67	577.94	578.01
AR	714+57.69	72.67	577.82	577.91
AS	714+67.69	72.67	577.69	577.79
AT	714+77.69	72.67	577.56	577.66
AU	714+87.69	72.67	577.42	577.51
AV	714+97.69	72.67	577.28	577.35
AW	715+07.69	72.67	577.13	577.18
℄ Brg. E. Abut.	715+17.19	72.67	576.99	577.01
Bk. E. Abut.	715+19.64	72.67	576.95	576.97

Notes:

All Elevations and Offsets are in feet.

FOR INFORMATION ONLY

MODEL: SHEET
FILE NAME: C:\TRANSYSTEMS\PW_LOCAL\TRANSYSTEMS-PW-01\D0136620\80C53_I80-SHT-021-TOS13.DGN

10/28/2025

exp.

USER NAME =	DESIGNED - CCE	REVISED -	
	CHECKED - VCP	REVISED -	
PLOT SCALE =	DRAWN - MTR	REVISED -	
PLOT DATE =	CHECKED - CCE	REVISED -	

STATE OF ILLINOIS
DEPARTMENT OF TRANSPORTATION

TOP OF SLAB ELEVATIONS 13
STRUCTURE NO. 099-0902 (EB)

SHEET S-19 OF S-51 SHEETS

F.A.I. RTE.	SECTION	COUNTY	TOTAL SHEETS	SHEET NO.
80	2025-2113-B	WILL	53	21
		CONTRACT NO. 80C53		
	ILLINOIS	FED. AID PROJECT		

EB INSIDE FACE OF SOUTH PARAPET

Location	Station	Offset from ℄ I-80	Theoretical Grade Elevations	Theoretical Grade Elevations Adjusted For Dead Load Deflection & Grinding
Bk. W. Abut.	709+83.08	73.50	577.89	577.91
℄ Brg. W. Abut.	709+85.54	73.50	577.92	577.94
A	709+95.54	73.50	578.04	578.10
B	710+05.54	73.50	578.15	578.25
C	710+15.54	73.50	578.26	578.39
D	710+25.54	73.50	578.36	578.51
E	710+35.54	73.50	578.45	578.61
F	710+45.54	73.50	578.54	578.70
G	710+55.54	73.50	578.63	578.76
H	710+65.54	73.50	578.71	578.82
I	710+75.54	73.50	578.79	578.87
J	710+85.54	73.50	578.86	578.91
K	710+95.54	73.50	578.92	578.95
℄ Brg. Pier 1	711+05.54	73.50	578.98	579.01
L	711+15.54	73.50	579.04	579.07
M	711+25.54	73.50	579.09	579.13
N	711+35.54	73.50	579.13	579.20
O	711+45.54	73.50	579.17	579.27
P	711+55.54	73.50	579.21	579.33
Q	711+65.54	73.50	579.24	579.38
R	711+75.54	73.50	579.26	579.41
S	711+85.54	73.50	579.28	579.43
T	711+95.54	73.50	579.29	579.43
U	712+05.54	73.50	579.30	579.42
V	712+15.54	73.50	579.31	579.40
W	712+25.54	73.50	579.30	579.37
X	712+35.54	73.50	579.30	579.34
Y	712+45.54	73.50	579.28	579.31
℄ Brg. Pier 2	712+56.54	73.50	579.27	579.29
Z	712+66.54	73.50	579.24	579.28
AA	712+76.54	73.50	579.21	579.27
AB	712+86.54	73.50	579.18	579.27
AC	712+96.54	73.50	579.14	579.26
AD	713+06.54	73.50	579.10	579.25
AE	713+16.54	73.50	579.05	579.22
AF	713+26.54	73.50	578.99	579.18
AG	713+36.54	73.50	578.94	579.12
AH	713+46.54	73.50	578.87	579.05
AI	713+56.54	73.50	578.80	578.96
AJ	713+66.54	73.50	578.73	578.86
AK	713+76.54	73.50	578.65	578.74
AL	713+86.54	73.50	578.56	578.63
AM	713+96.54	73.50	578.47	578.51
℄ Brg. Pier 3	714+07.54	73.50	578.36	578.39
AN	714+17.54	73.50	578.26	578.28
AO	714+27.54	73.50	578.16	578.19
AP	714+37.54	73.50	578.05	578.09
AQ	714+47.54	73.50	577.93	578.00
AR	714+57.54	73.50	577.81	577.89
AS	714+67.54	73.50	577.68	577.77
AT	714+77.54	73.50	577.55	577.64
AU	714+87.54	73.50	577.41	577.50
AV	714+97.54	73.50	577.27	577.34
AW	715+07.54	73.50	577.12	577.17
℄ Brg. E. Abut.	715+17.04	73.50	576.97	576.99
Bk. E. Abut.	715+19.49	73.50	576.93	576.96

FOR INFORMATION ONLY

Notes:

All Elevations and Offsets are in feet.

MODEL: SHEET
FILE NAME: C:\TRANSYSTEMS\PW_LOCAL\TRANSYSTEMS-PW-01\D0136620\80C53_I80-SHT-022-TOS14.DGN

10/28/2025

exp.

USER NAME =	DESIGNED - CCE	REVISED -	
	CHECKED - VCP	REVISED -	
PLOT SCALE =	DRAWN - MTR	REVISED -	
PLOT DATE =	CHECKED - CCE	REVISED -	

STATE OF ILLINOIS
DEPARTMENT OF TRANSPORTATION

TOP OF SLAB ELEVATIONS 14
STRUCTURE NO. 099-0902 (EB)

SHEET S-20 OF S-51 SHEETS

F.A.I. RTE.	SECTION	COUNTY	TOTAL SHEETS	SHEET NO.
80	2025-2113-B	WILL	53	22
		CONTRACT NO. 80C53		
	ILLINOIS	FED. AID PROJECT		

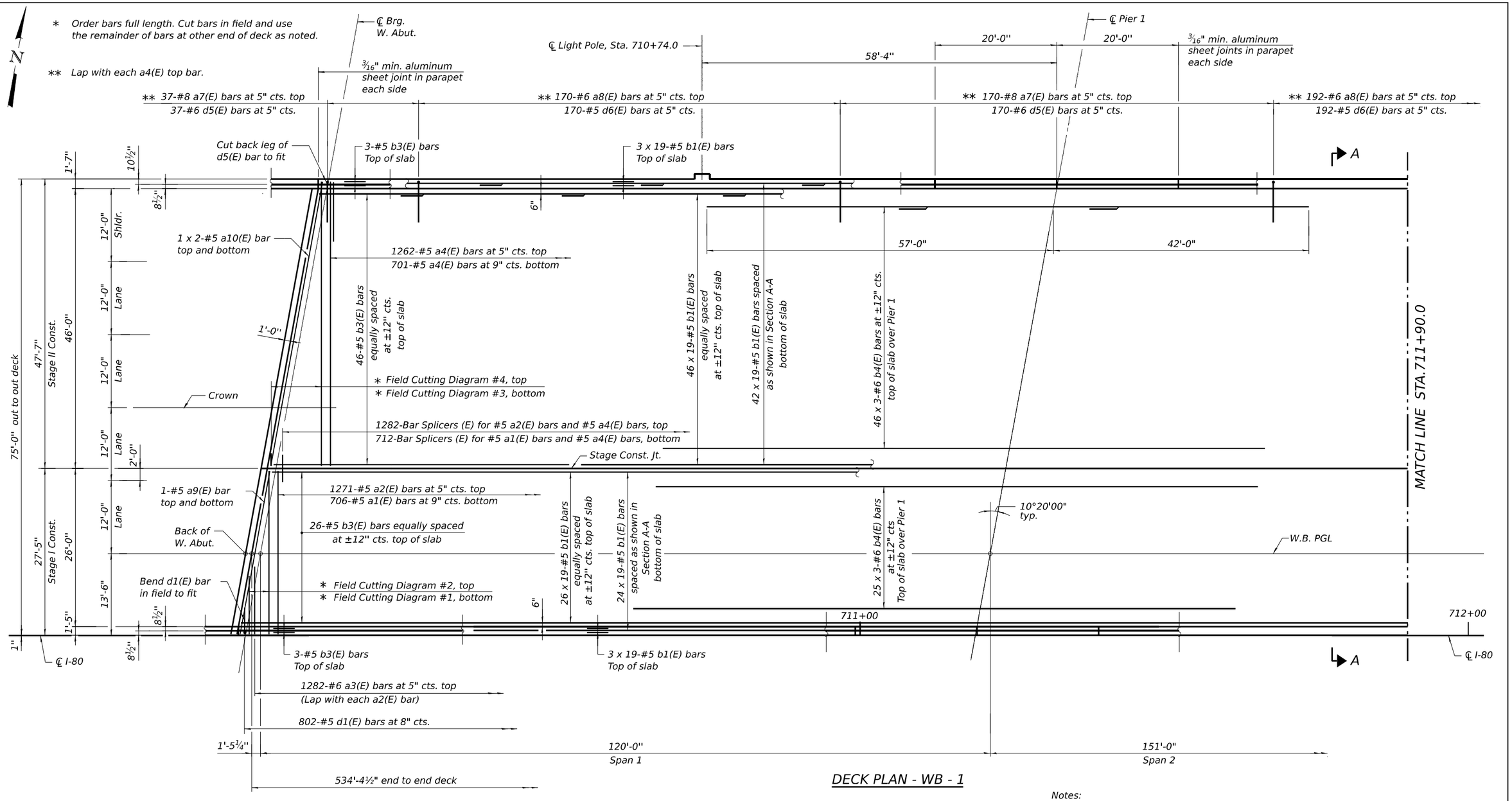

DECK PLAN - WB - 1

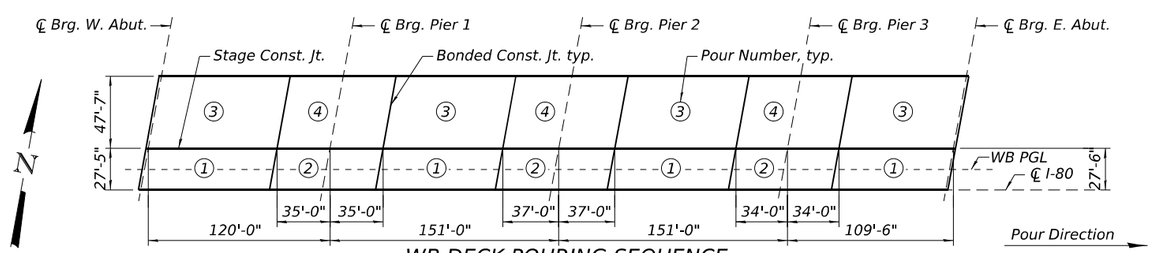

WB DECK POURING SEQUENCE

MINIMUM BAR LAP

#5 bar = 3'-6"
#6 bar = 4'-5"

Notes:

1. Bars indicated thus 20 x 3-#5 etc. indicates 20 lines of bars with 3 lengths per line.
2. When the deck pour is stopped for the day at one or more of the transverse bonded construction joints in the deck pouring sequence as shown, the next pour shall not be made until both of the following are met:
   a) At least 72 hours shall have elapsed from the end of the previous pour.
   b) The concrete strength shall have attained a minimum flexural strength of 675 psi or a minimum compressive strength of 4000 psi.

FOR INFORMATION ONLY

MODEL: SHEET
FILE NAME: C:\TRANSYSTEMS\PW_LOCAL\TRANSYSTEMS-PW-01\D0136620\80C53_I80-5HT-023-DECK1 WB.DGN

10/28/2025

exp.

USER NAME =	DESIGNED - BAR	REVISED -
	CHECKED - KK	REVISED -
PLOT SCALE =	DRAWN - HBJ	REVISED -
PLOT DATE =	CHECKED - BAR	REVISED -

STATE OF ILLINOIS
DEPARTMENT OF TRANSPORTATION

DECK PLAN 1
STRUCTURE NO. 099-0903 (WB)

SHEET S-21 OF S-51 SHEETS

F.A.I. RTE.	SECTION	COUNTY	TOTAL SHEETS	SHEET NO.
80	2025-2113-B	WILL	53	23
		CONTRACT NO. 80C53		
	ILLINOIS	FED. AID PROJECT		

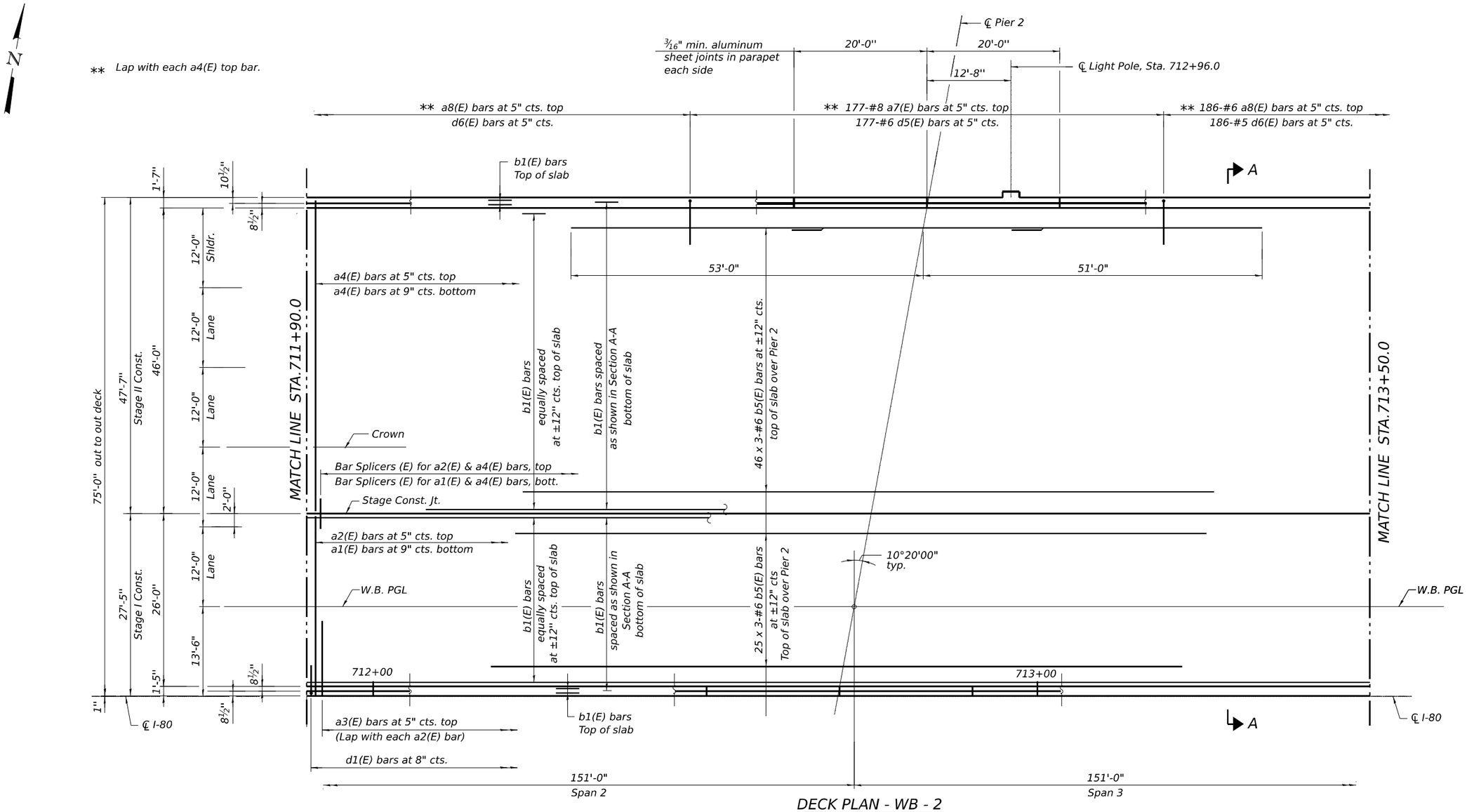

DECK PLAN - WB - 2

FOR INFORMATION ONLY

MODEL: SHEET
FILE NAME: C:\TRANSYSTEMS\PW_LOCAL\TRANSYSTEMS-PW-01\D0136620\80C53_I80-SHT-024-DECK2 WB.DGN

10/28/2025

exp.	USER NAME =	DESIGNED - BAR	REVISED -	STATE OF ILLINOIS DEPARTMENT OF TRANSPORTATION	DECK PLAN 2 STRUCTURE NO. 099-0903 (WB)
		CHECKED - KK	REVISED -		
	PLOT SCALE =	DRAWN - HBJ	REVISED -		
	PLOT DATE =	CHECKED - BAR	REVISED -		SHEET S-22 OF S-51 SHEETS

F.A.I. RTE.	SECTION	COUNTY	TOTAL SHEETS	SHEET NO.
80	2025-2113-B	WILL	53	24
		CONTRACT NO. 80C53		
		ILLINOIS	FED. AID PROJECT	

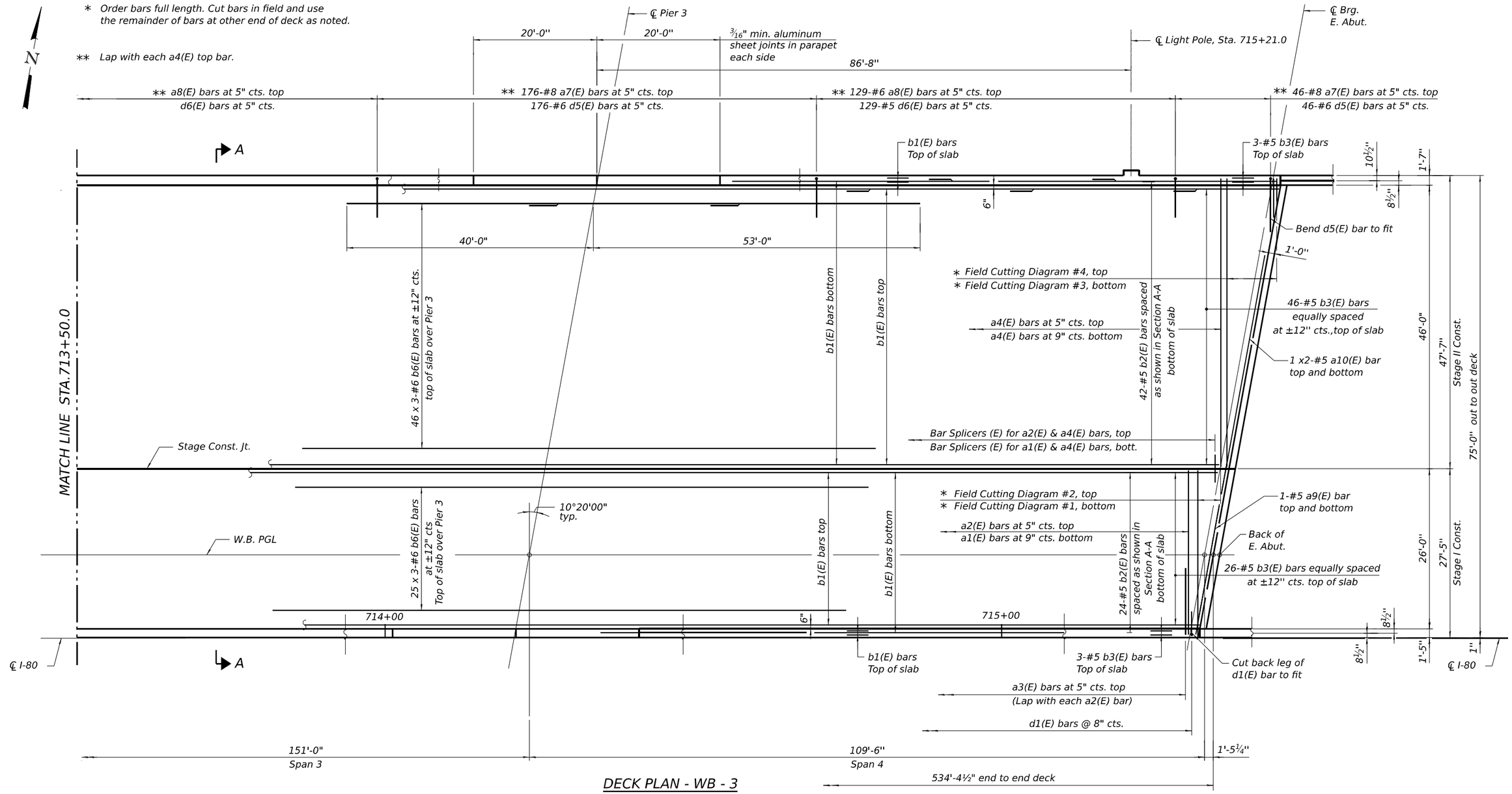

DECK PLAN - WB - 3

FOR INFORMATION ONLY

MODEL: SHEET
FILE NAME: C:\TRANSYSTEMS\PW_LOCAL\TRANSYSTEMS-PW-01\D0136620\80C53_JB0-SHT-025-DECK3 WB.DGN

10/28/2025

USER NAME =	DESIGNED - BAR	REVISED -	
	CHECKED - KK	REVISED -	
PLOT SCALE =	DRAWN - HBJ	REVISED -	
PLOT DATE =	CHECKED - BAR	REVISED -	

STATE OF ILLINOIS
DEPARTMENT OF TRANSPORTATION

DECK PLAN 3
STRUCTURE NO. 099-0903 (WB)

SHEET S-23 OF S-51 SHEETS

F.A.I. RTE.	SECTION	COUNTY	TOTAL SHEETS	SHEET NO.
80	2025-2113-B	WILL	53	25
		CONTRACT NO. 80C53		
		ILLINOIS	FED. AID PROJECT	

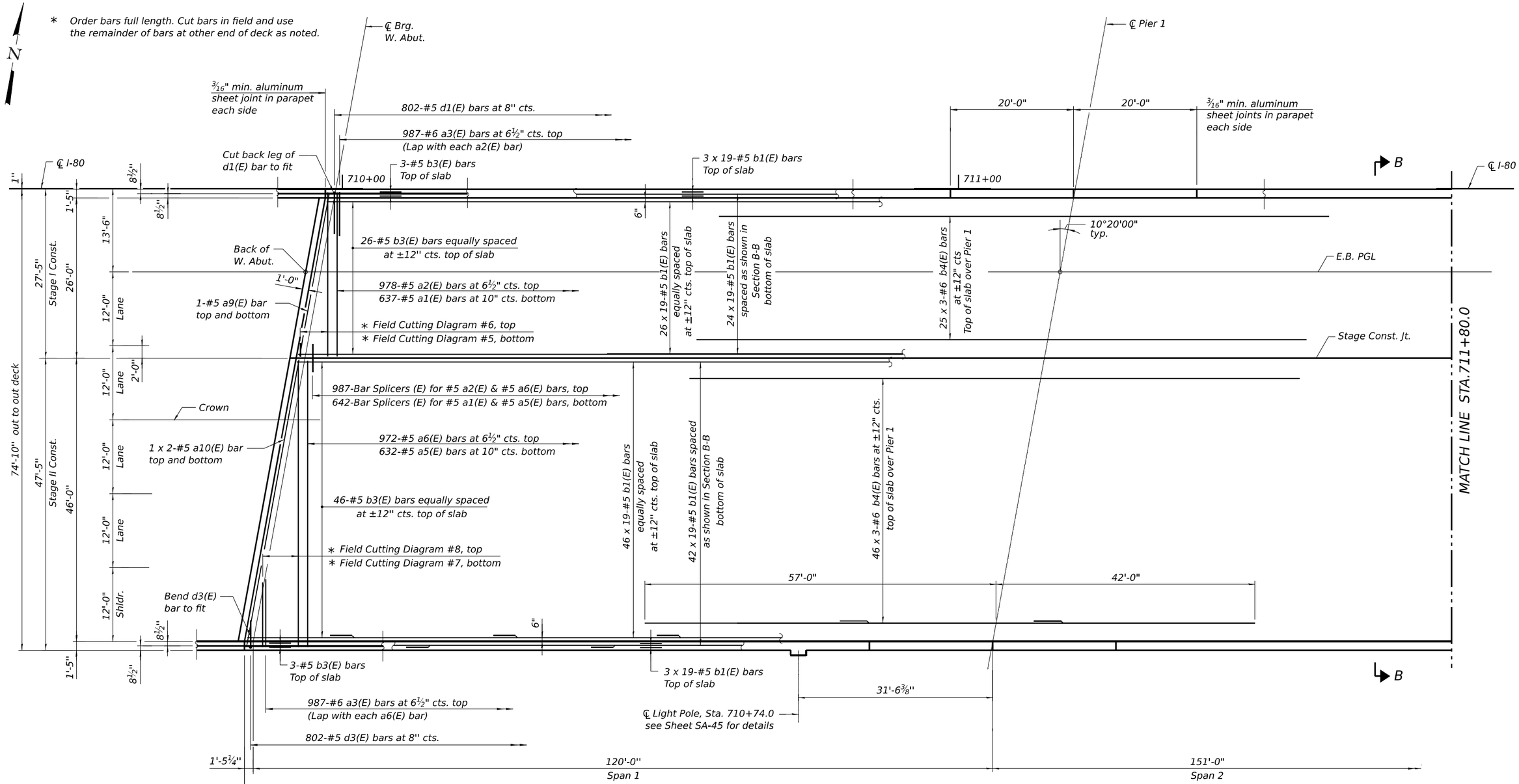

DECK PLAN - EB - 1

Notes:

1. Bars indicated thus 20 x 3-#5 etc. indicates 20 lines of bars with 3 lengths per line.
2. When the deck pour is stopped for the day at one or more of the transverse bonded construction joints in the deck pouring sequence as shown, the next pour shall not be made until both of the following are met:
   a) At least 72 hours shall have elapsed from the end of the previous pour.
   b) The concrete strength shall have attained a minimum flexural strength of 675 psi or a minimum compressive strength of 4000 psi.

MINIMUM BAR LAP

#5 bar = 3'-6"
#6 bar = 4'-5"

FOR INFORMATION ONLY

MODEL: SHEET
FILE NAME: C:\TRANSYSTEMS\PW_LOCAL\TRANSYSTEMS-PW-01\D0136620\80C53_I80-SHT-026-DECK1 EB.DGN

exp.

USER NAME =	DESIGNED - BAR	REVISED -	
	CHECKED - KK	REVISED -	
PLOT SCALE =	DRAWN - HBJ	REVISED -	
PLOT DATE =	CHECKED - BAR	REVISED -	

STATE OF ILLINOIS
DEPARTMENT OF TRANSPORTATION

DECK PLAN 1
STRUCTURE NO. 099-0902 (EB)

SHEET S-24 OF S-51 SHEETS

F.A.I. RTE.	SECTION	COUNTY	TOTAL SHEETS	SHEET NO.
80	2025-2113-B	WILL	53	26
		CONTRACT NO. 80C53		
	ILLINOIS	FED. AID PROJECT		

10/28/2025

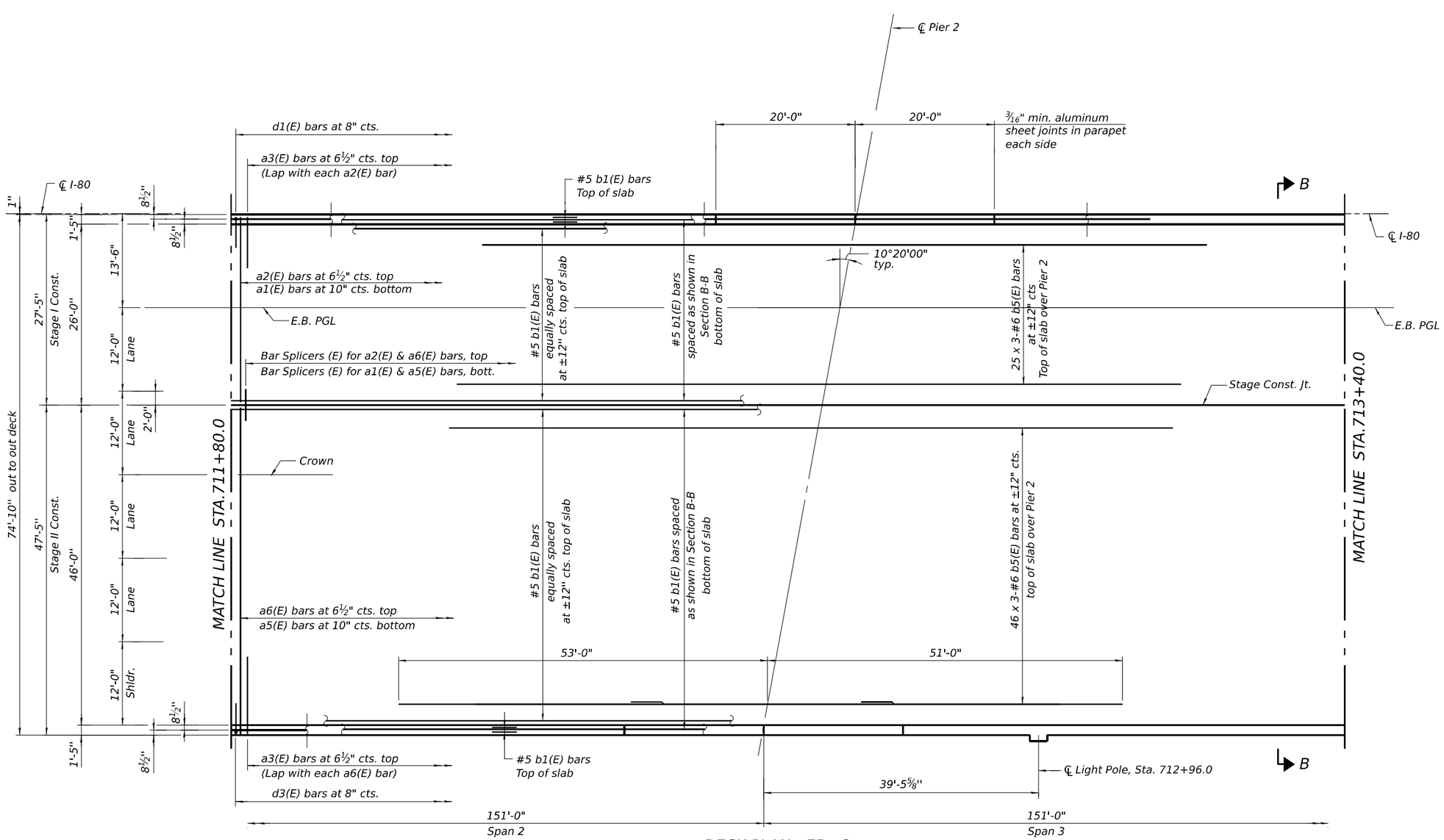

DECK PLAN - EB - 2

FOR INFORMATION ONLY

MODEL: SHEET
FILE NAME: C:\TRANSYSTEMS\PW_LOCAL\TRANSYSTEMS-PW-01\D0136620\80C53_J80-SHT-027-DECK2 EB.DGN

10/28/2025

exp.

USER NAME =	DESIGNED - BAR	REVISED -	
	CHECKED - KK	REVISED -	
PLOT SCALE =	DRAWN - HBJ	REVISED -	
PLOT DATE =	CHECKED - BAR	REVISED -	

STATE OF ILLINOIS
DEPARTMENT OF TRANSPORTATION

DECK PLAN 2
STRUCTURE NO. 099-0902 (EB)

SHEET S-25 OF S-51 SHEETS

F.A.I. RTE.	SECTION	COUNTY	TOTAL SHEETS	SHEET NO.
80	2025-2113-B	WILL	53	27
		CONTRACT NO. 80C53		
		ILLINOIS	FED. AID PROJECT	

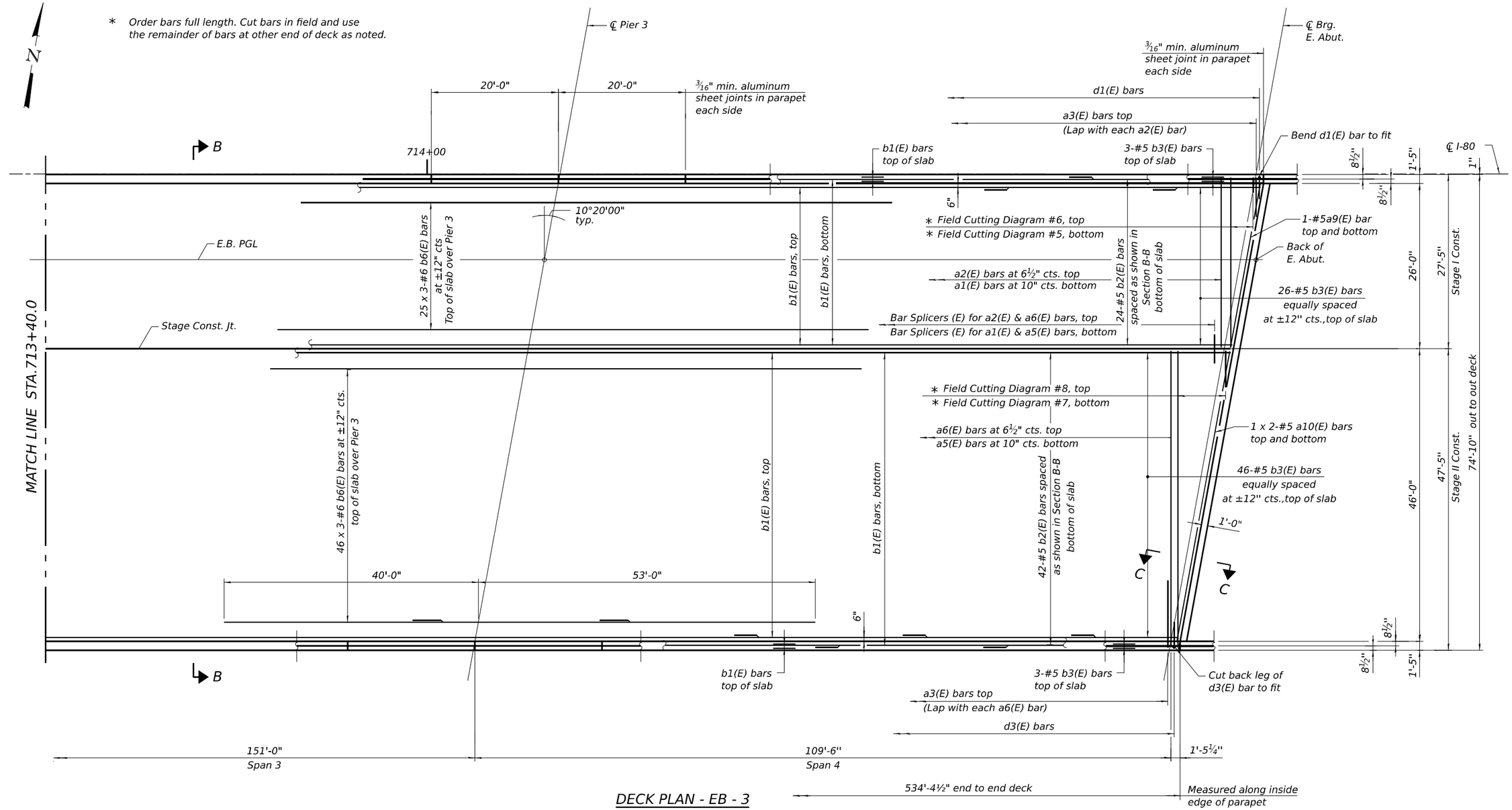

DECK PLAN - EB - 3

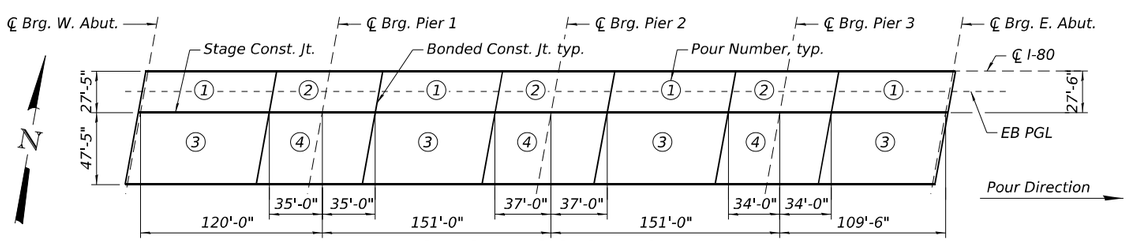

EB DECK POURING SEQUENCE

FOR INFORMATION ONLY

MODEL: SHEET
FILE NAME: C:\TRANSYSTEMS\PW_LOCAL\TRANSYSTEMS-PW-01\D0136620\80C53_I80-SHT-028-DECK3 EB.DGN
10/28/2025

exp.	USER NAME =	DESIGNED - BAR	REVISED -
		CHECKED - KK	REVISED -
	PLOT SCALE =	DRAWN - HBJ	REVISED -
	PLOT DATE =	CHECKED - BAR	REVISED -

STATE OF ILLINOIS
DEPARTMENT OF TRANSPORTATION

DECK PLAN 3
STRUCTURE NO. 099-0902 (EB)
SHEET S-26 OF S-51 SHEETS

F.A.I. RTE.	SECTION	COUNTY	TOTAL SHEETS	SHEET NO.
80	2025-2113-B	WILL	53	28
		CONTRACT NO. 80C53		
		ILLINOIS	FED. AID PROJECT	

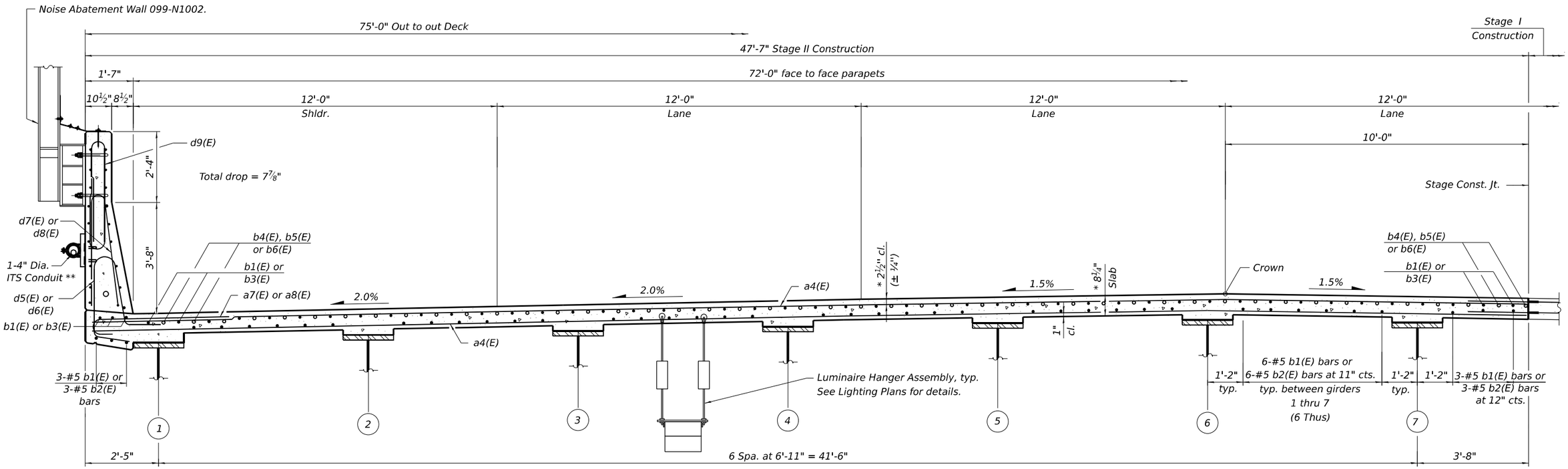

NEAR PIER

* Prior to grinding.
** See ITS Plans for details.

CROSS SECTION A-A - STAGE II CONSTRUCTION - WB

(Looking East)

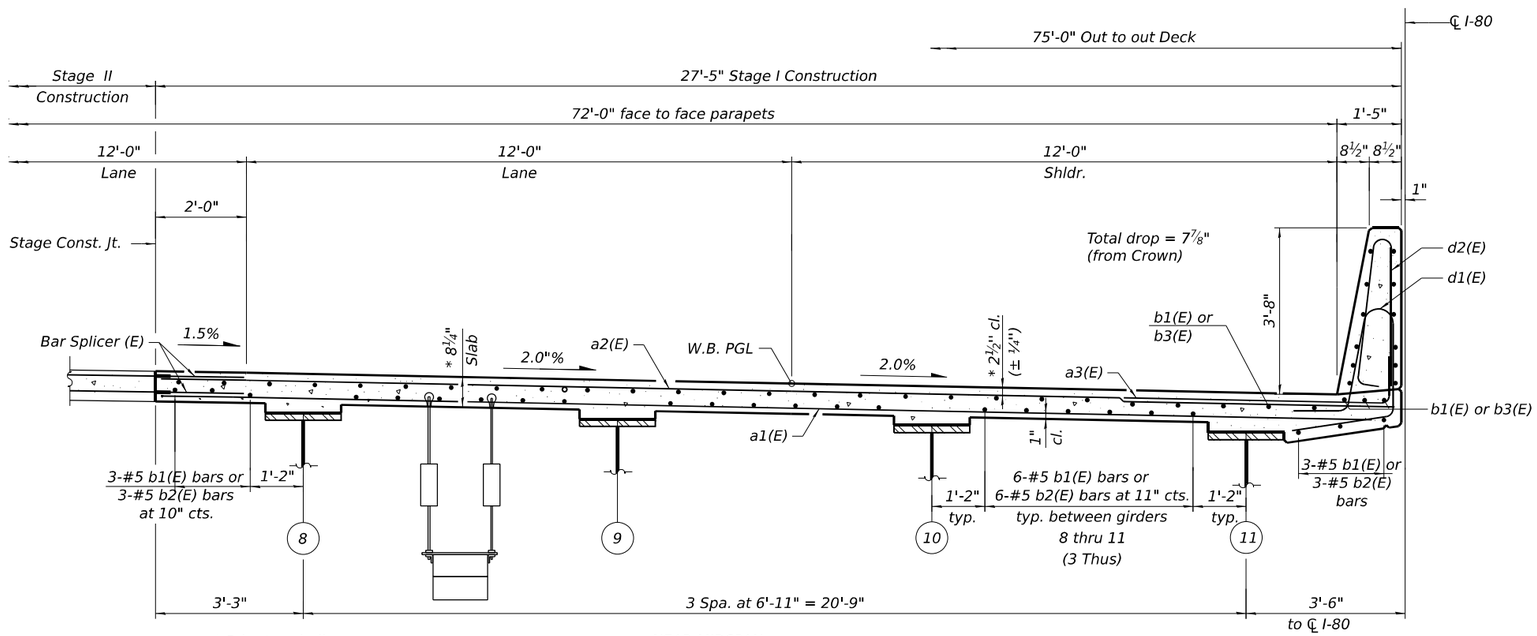

NEAR MIDSPAN

* Prior to grinding.

CROSS SECTION A-A - STAGE I CONSTRUCTION - WB

(Looking East)

FOR INFORMATION ONLY

MODEL: SHEET
FILE NAME: C:\TRANSYSTEMS\PW_LOCAL\TRANSYSTEMS-PW-01\D0136620\80C53_I80-SHT-029-DECKSECWB.DGN

10/28/2025

exp.

USER NAME =	DESIGNED - BAR	REVISED -	
	CHECKED - KK	REVISED -	
PLOT SCALE =	DRAWN - HBJ	REVISED -	
PLOT DATE =	CHECKED - BAR	REVISED -	

STATE OF ILLINOIS
DEPARTMENT OF TRANSPORTATION

DECK SECTIONS
STRUCTURE NO. 099-0903 (WB)

SHEET S-27 OF S-51 SHEETS

F.A.I. RTE.	SECTION	COUNTY	TOTAL SHEETS	SHEET NO.
80	2025-2113-B	WILL	53	29
		CONTRACT NO. 80C53		
	ILLINOIS	FED. AID PROJECT		

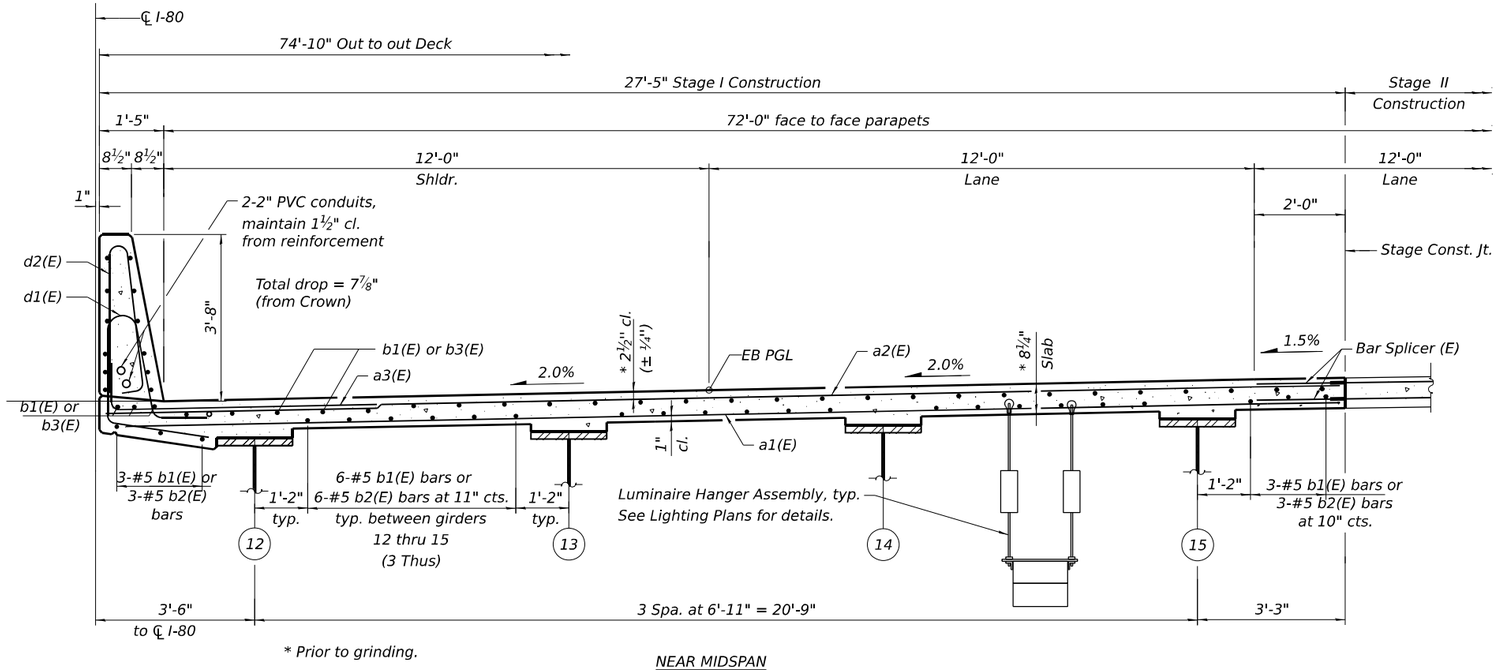

* Prior to grinding.

NEAR MIDSPAN

CROSS SECTION B-B - STAGE I CONSTRUCTION - EB

(Looking East)

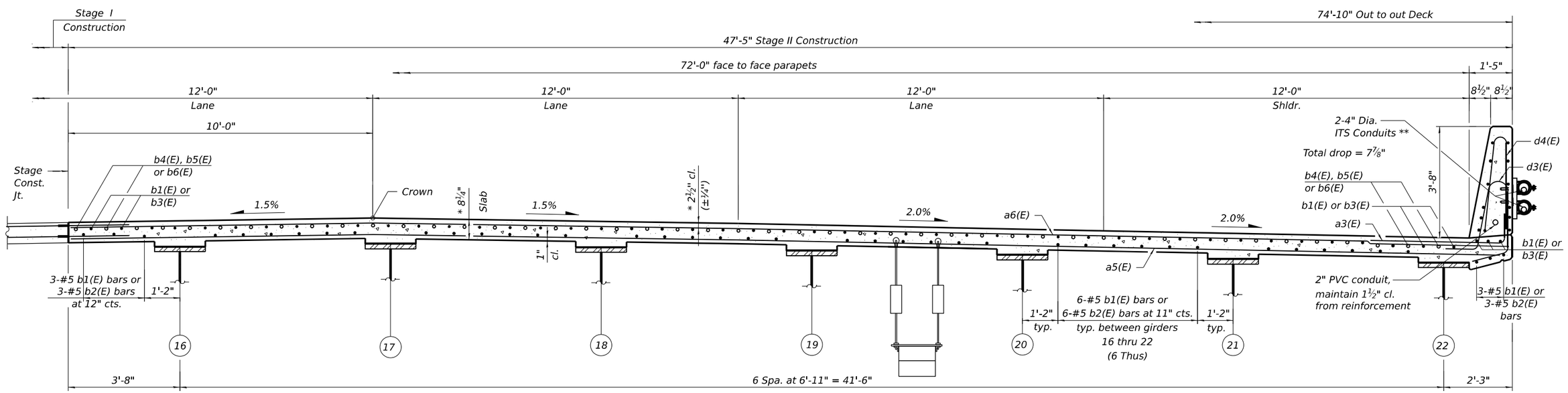

* Prior to grinding.
** See ITS Plans for details.

NEAR PIER

CROSS SECTION B-B - STAGE II CONSTRUCTION - EB

(Looking East)

FOR INFORMATION ONLY

MODEL: SHEET
FILE NAME: C:\TRANSYSTEMS\PW_LOCAL\TRANSYSTEMS-PW-01\D0136620\80C53_I80-SHT-030-DECKSECEB.DGN

10/28/2025

exp.

USER NAME =	DESIGNED - BAR	REVISED -	
	CHECKED - KK	REVISED -	
PLOT SCALE =	DRAWN - HBJ	REVISED -	
PLOT DATE =	CHECKED - BAR	REVISED -	

STATE OF ILLINOIS
DEPARTMENT OF TRANSPORTATION

DECK SECTIONS
STRUCTURE NO. 099-0902 (EB)

SHEET S-28 OF S-51 SHEETS

F.A.I. RTE.	SECTION	COUNTY	TOTAL SHEETS	SHEET NO.
80	2025-2113-B	WILL	53	30
		CONTRACT NO. 80C53		
		ILLINOIS	FED. AID PROJECT	

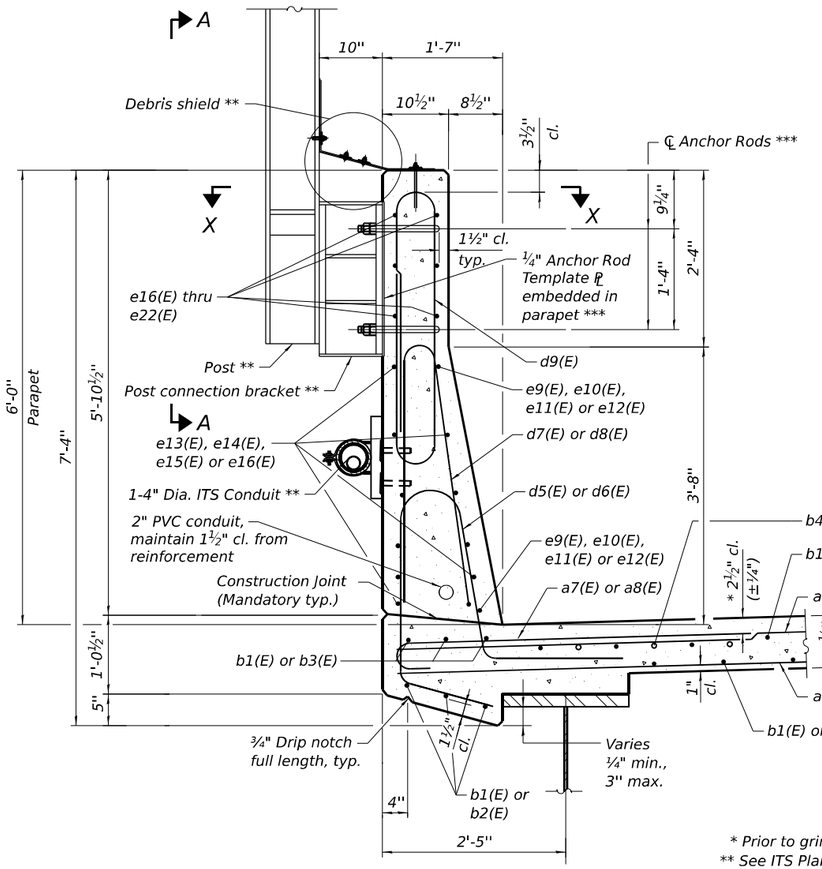

SECTION THRU PARAPET - WB

(North Parapet)

* Prior to grinding.
** See ITS Plans for details.

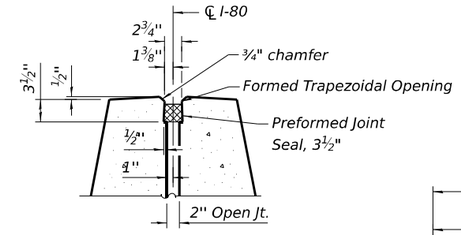

DETAIL A

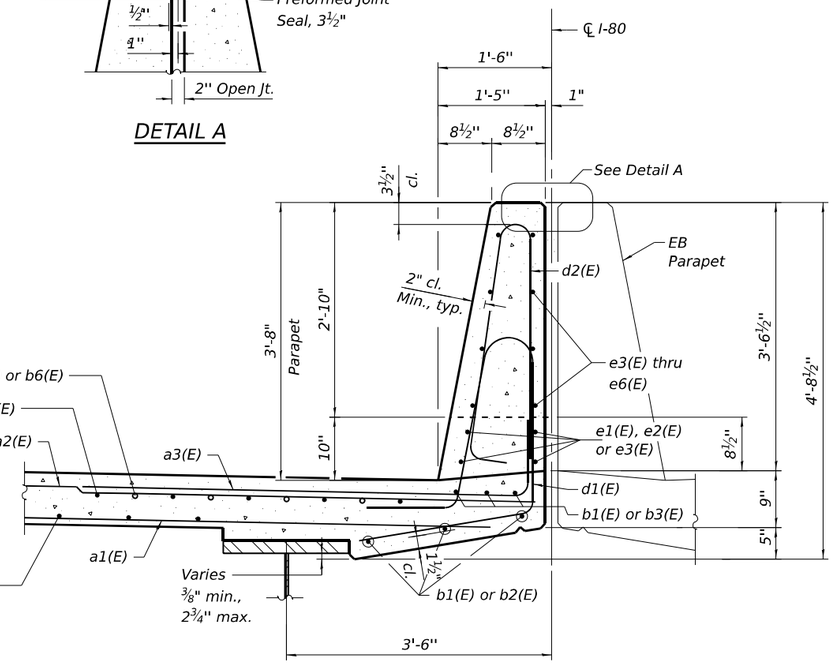

SECTION THRU PARAPET - WB

(South Parapet)

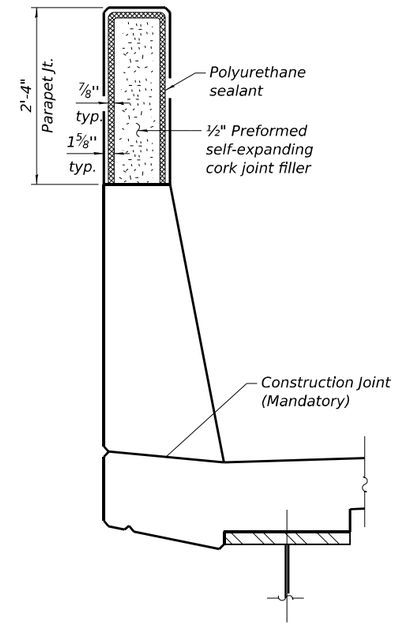

INTERIOR JOINT DETAIL - WB

(North Parapet)

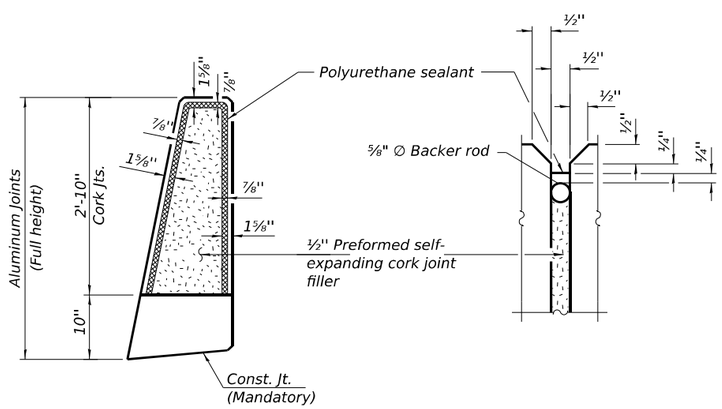

PARAPET JOINT DETAILS

(South Parapet)

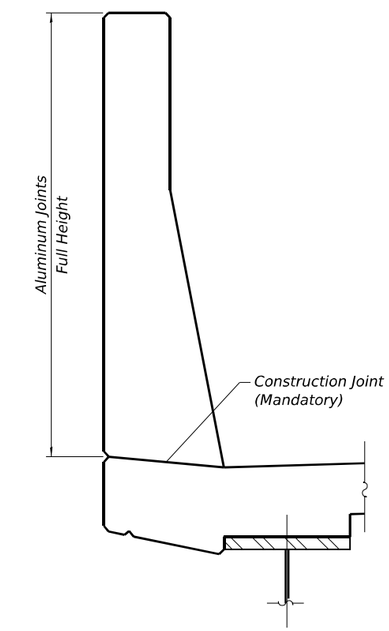

ALUMINUM JOINT DETAIL - WB

(North Parapet)

Notes:

1. The $^{3}/_{16}$"minimum aluminum sheet shall be ASTM B 209 alloy 3003-H14 and coated with 5 mils of either bitumen paint or epoxy paint to minimize reaction with wet concrete. Cost included with Concrete Superstructure.
2. The polyurethane sealant shall be according to Article 1050.04 of the Standard Specifications and the color shall be gray.

FOR INFORMATION ONLY

MODEL: SHEET
FILE NAME: C:\TRANSYSTEMS\PW_LOCAL\TRANSYSTEMS-PW-01\D0136620\80C53_I80-SHT-035-DECKDET1.DGN
10/28/2025

USER NAME =	DESIGNED - BAR	REVISED -	
	CHECKED - KK	REVISED -	
PLOT SCALE =	DRAWN - HBJ	REVISED -	
PLOT DATE =	CHECKED - BAR	REVISED -	

STATE OF ILLINOIS
DEPARTMENT OF TRANSPORTATION

DECK DETAILS 1
STRUCTURE NOS. 099-0902 (EB) & 099-0903 (WB)

SHEET S-29 OF S-51 SHEETS

F.A.I. RTE.	SECTION	COUNTY	TOTAL SHEETS	SHEET NO.
80	2025-2113-B	WILL	53	31
		CONTRACT NO. 80C53		
		ILLINOIS	FED. AID PROJECT	

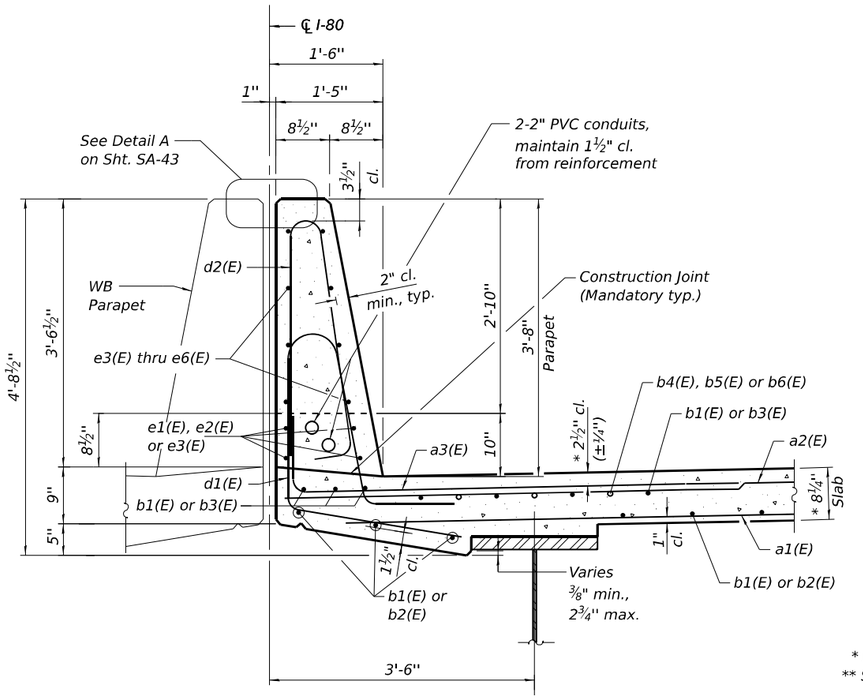

SECTION THRU PARAPET - EB

(North Parapet)

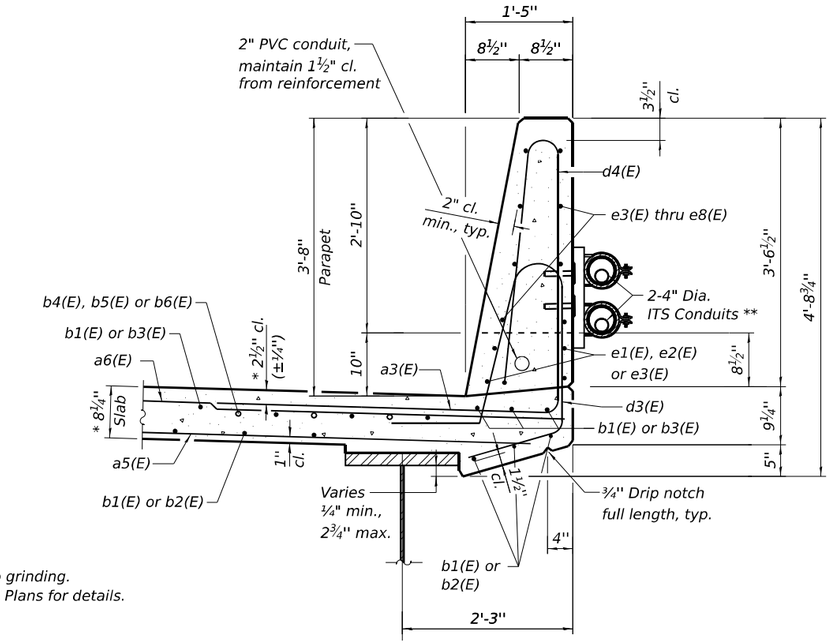

SECTION THRU PARAPET - EB

(South Parapet)

* Prior to grinding.
** See ITS Plans for details.

FOR INFORMATION ONLY

MODEL: SHEET
FILE NAME: C:\TRANSYSTEMS\PW_LOCAL\TRANSYSTEMS-PW-01\D0136620\80C53_I80-SHT-036-DECKDET2.DGN

10/28/2025

exp.	USER NAME =	DESIGNED - BAR	REVISED -
		CHECKED - KK	REVISED -
	PLOT SCALE =	DRAWN - HBJ	REVISED -
	PLOT DATE =	CHECKED - BAR	REVISED -

STATE OF ILLINOIS
DEPARTMENT OF TRANSPORTATION

DECK DETAILS 2
STRUCTURE NOS. 099-0902 (EB) & 099-0903 (WB)

SHEET S-30 OF S-51 SHEETS

F.A.I. RTE.	SECTION	COUNTY	TOTAL SHEETS	SHEET NO.
80	2025-2113-B	WILL	53	32
		CONTRACT NO. 80C53		
		ILLINOIS	FED. AID PROJECT	

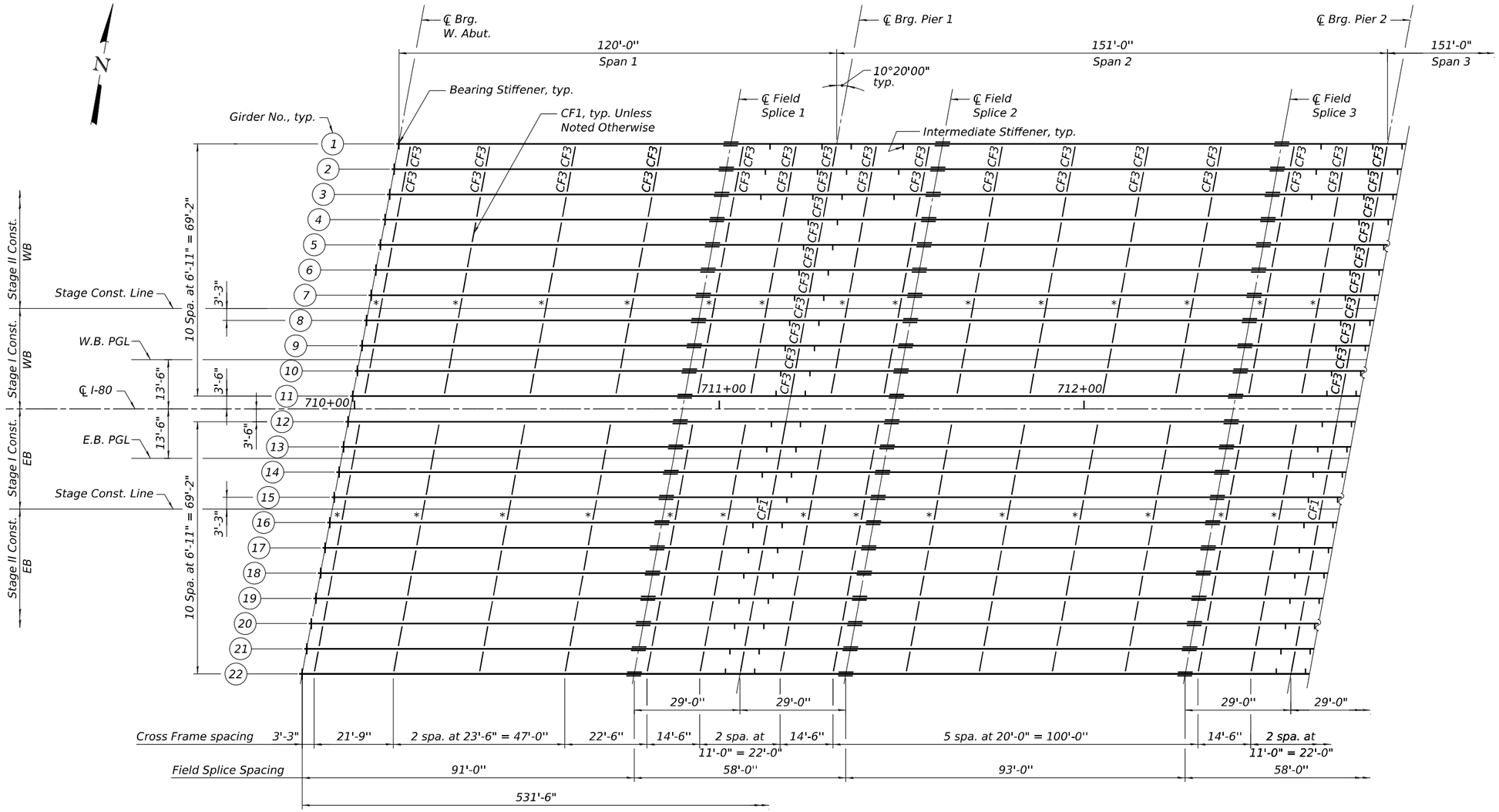

PARTIAL FRAMING PLAN (1 OF 2)

* CF1 permanent. Temporary CF2 for stage construction.
See Cross Frame Stage Construction Sequence on Sheet S-36.

Notes:

1. All structural steel shall be AASHTO M270 Grade 50 except angle members and gusset plates of CF1 and CF2 cross frames which may be Grade 36.
2. All cross-frames between beams or girders shall be installed with erection pins and bolts in accordance with the erection plan approved by the Engineer. Individual cross-frame at supports may be temporarily disconnected to install bearing anchor bolts.
3. Cross frame spacing shown is measured to centerline of cross frame connection plates.
4. For cross frame details, see Sheet S-36.

MODEL: SHEET
FILE NAME: C:\TRANSYSTEMS\PW_LOCAL\TRANSYSTEMS-PW-01\D0136620\80C53_I80-SHT-039-FRAMING1.DGN

exp.

USER NAME =	DESIGNED - CCE	REVISED -	
	CHECKED - BAR	REVISED -	
PLOT SCALE =	DRAWN - HBJ	REVISED -	
PLOT DATE =	CHECKED - BAR	REVISED -	

STATE OF ILLINOIS
DEPARTMENT OF TRANSPORTATION

FRAMING PLAN 1
STRUCTURE NOS. 099-0902 (EB) & 099-0903 (WB)

SHEET S-31 OF S-51 SHEETS

F.A.I. RTE.	SECTION	COUNTY	TOTAL SHEETS	SHEET NO.
80	2025-2113-B	WILL	53	33
		CONTRACT NO. 80C53		
	ILLINOIS	FED. AID PROJECT		

10/28/2025

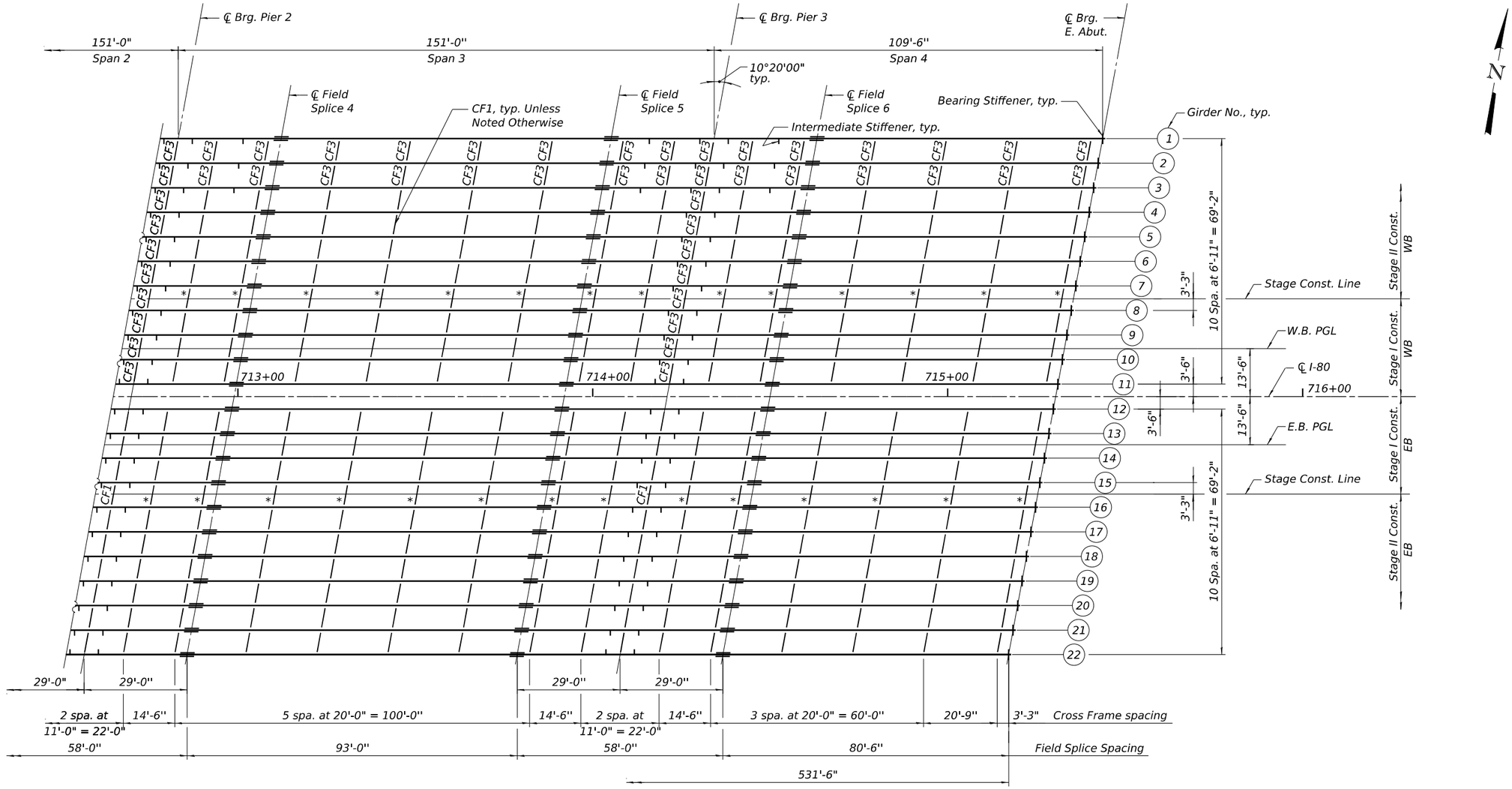

PARTIAL FRAMING PLAN (2 OF 2)

* CF1 permanent. Temporary CF2 for stage construction.
See Cross Frame Stage Construction Sequence on Sheet S-36.

Note:
For Notes, see Sht. S-31.

MODEL: SHEET
FILE NAME: C:\TRANSYSTEMS\PW_LOCAL\TRANSYSTEMS-PW-01\D0136620\80C53_I80-SHT-040-FRAMING2.DGN

USER NAME =	DESIGNED - CCE	REVISED -	STATE OF ILLINOIS DEPARTMENT OF TRANSPORTATION
	CHECKED - BAR	REVISED -	
PLOT SCALE =	DRAWN - HBJ	REVISED -	
PLOT DATE =	CHECKED - BAR	REVISED -	

FRAMING PLAN 2
STRUCTURE NOS. 099-0902 (EB) & 099-0903 (WB)
SHEET S-32 OF S-51 SHEETS

F.A.I. RTE.	SECTION	COUNTY	TOTAL SHEETS	SHEET NO.
80	2025-2113-B	WILL	53	34
		CONTRACT NO. 80C53		
	ILLINOIS	FED. AID PROJECT		

10/28/2025

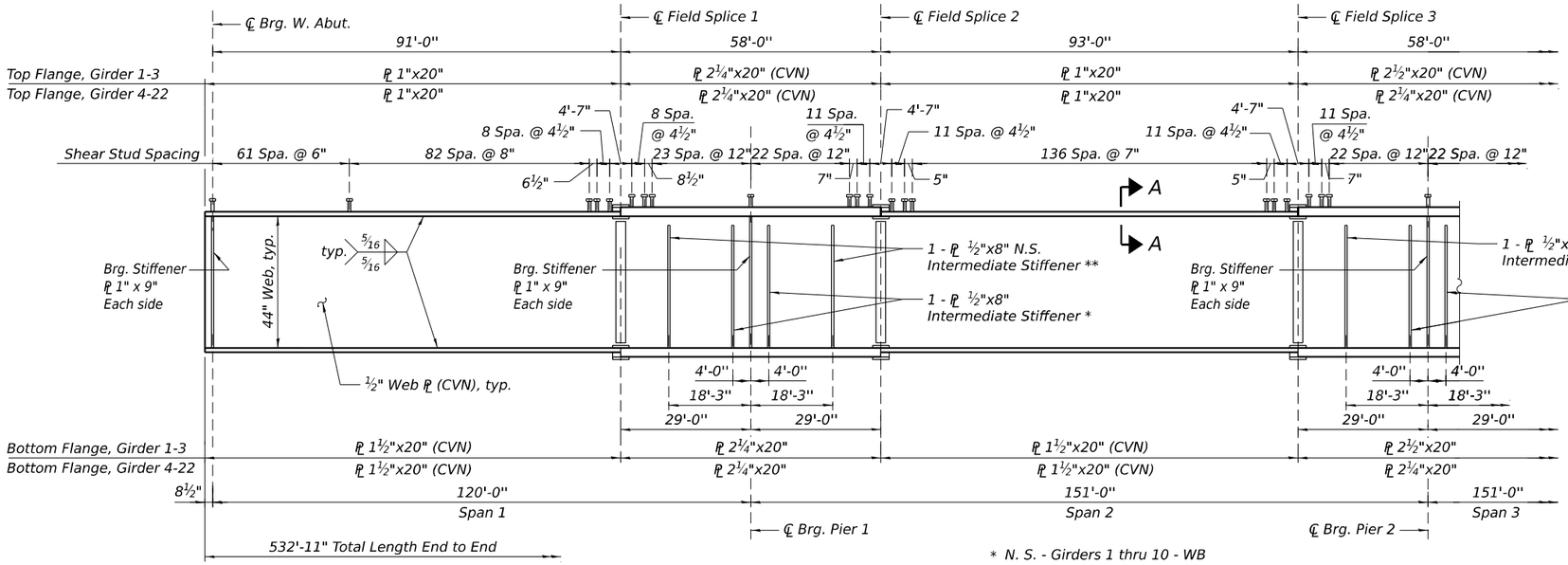

* N. S. - Girders 1 thru 10 - WB
Girders 12 thru 21 - EB
F. S. - Girder 11 - WB
Girder 22 - EB

** Girders 1 thru 3 only

PARTIAL GIRDER ELEVATION (1 OF 2)

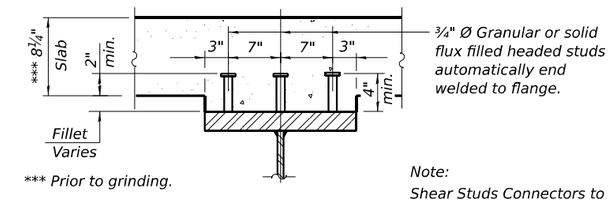

SECTION A-A

Note:
Shear Studs Connectors to be furnished and installed by the Erection Contract (62F94).

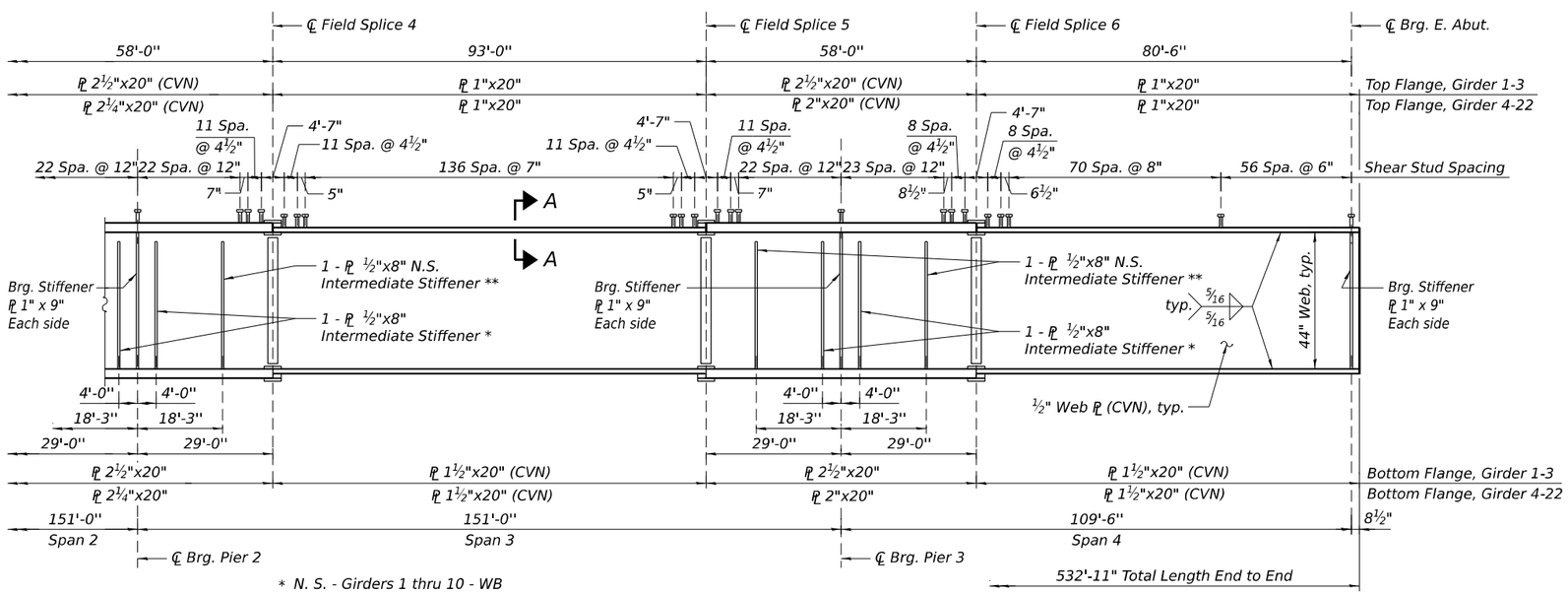

* N. S. - Girders 1 thru 10 - WB
Girders 12 thru 21 - EB
F. S. - Girder 11 - WB
Girder 22 - EB

** Girders 1 thru 3 only

PARTIAL GIRDER ELEVATION (2 OF 2)

Notes:
1. All structural steel shall be AASHTO M270 Grade 50.
2. Load carrying components designated "CVN" shall conform to the Charpy-V-Notch Impact Energy Requirement, Zone 2.
3. Do not place shear studs on splice plates. Maintain a minimum distance of 2½" from end of splice plate to centerline of nearest stud.
4. Cross frame connection plates not shown on girder elevation. For locations see Framing Plan. For details see Sheet S-36.
5. For field splice details, see Sheet S-36.
6. For bearing stiffener details, see Sheet S-36.
7. For intermediate stiffener details, see Sheet S-36.
8. N.S. denotes Near Side.
9. F.S. denotes Far Side.

MODEL: SHEET
FILE NAME: C:\TRANSYSTEMS\PW_LOCAL\TRANSYSTEMS-PW-01\D0136620\80C53_I80-5HT-041-GIRDERELEV.DGN
10/28/2025

exp.

USER NAME =	DESIGNED - CCE	REVISED -	
	CHECKED - BAR	REVISED -	
PLOT SCALE =	DRAWN - HBJ	REVISED -	
PLOT DATE =	CHECKED - BAR	REVISED -	

STATE OF ILLINOIS
DEPARTMENT OF TRANSPORTATION

GIRDER ELEVATION
STRUCTURE NOS. 099-0902 (EB) & 099-0903 (WB)

SHEET S-33 OF S-51 SHEETS

F.A.I. RTE.	SECTION	COUNTY	TOTAL SHEETS	SHEET NO.
80	2025-2113-B	WILL	53	35
		CONTRACT NO. 80C53		
	ILLINOIS	FED. AID PROJECT		

EXTERIOR GIRDER MOMENT TABLE - GIRDER 1								
		0.4 Span 1	Pier 1	0.5 Span 2	Pier 2	0.5 Span 3	Pier 3	0.6 Span 4
I_s	(in⁴)	28458	51716	28458	57658	28458	57658	28458
I_c (n)	(in⁴)	62562	-	62562	-	62562	-	62562
I_c (3n)	(in⁴)	45380	-	45380	-	45380	-	45380
I_c (cr)	(in⁴)	-	56310	-	62349	-	62349	-
S_s	(in³)	1404	2133	1404	2353	1404	2353	1404
S_c (n)	(in³)	1762	-	1762	-	1762	-	1762
S_c (3n)	(in³)	1629	-	1629	-	1629	-	1629
S_c (cr)	(in³)	-	2195	-	2417	-	2417	-
S_x	(in³)	1664	2174	1685	2397	1669	2398	1688
DC1	(k/')	1.128	1.264	1.128	1.298	1.128	1.298	1.128
M_{DC1}	('k)	1025	2373	835	2470	890	2271	741
DC2	(k/')	0.406	0.406	0.406	0.705	0.705	0.705	0.705
M_{DC2}	('k)	418	708	220	1178	702	1437	440
DW	(k/')	0.327	0.327	0.327	0.327	0.327	0.327	0.327
M_{DW}	('k)	302	658	257	693	273	625	221
LLDF		0.475	0.465	0.457	0.457	0.457	0.468	0.483
M_{LL+IM}	('k)	1416	1683	1365	1773	1346	1662	1282
f_ℓ (Strength I)	(ksi)	0.00	0.00	0.00	0.00	0.00	0.00	0.00
$M_u + \frac{1}{3} f_\ell S_x$	('k)	4735	7784	4093	8702	4755	8481	4051
$\Phi_f M_n$	('k)	8112	9931	8112	10932	8112	10936	8112
f_s DC1	(ksi)	8.76	13.35	7.14	12.59	7.61	11.58	6.33
f_s DC2	(ksi)	3.08	3.87	1.62	5.85	5.17	7.14	3.24
f_s DW	(ksi)	2.22	3.60	1.89	3.44	2.01	3.10	1.63
f_s (LL+IM)	(ksi)	9.64	9.20	9.30	8.80	9.17	8.25	8.73
f_ℓ (Service II)	(ksi)	0.00	0.00	0.00	0.00	0.00	0.00	0.00
$f_s + f_\ell/2$ (Service II)	(ksi)	26.60	32.78	22.74	33.33	26.71	32.55	22.55
Service II Resistance	(ksi)	47.50	47.50	47.50	47.50	47.50	47.50	47.50
$f_s + f_\ell/3$ (Strength I)	(ksi)	35.02	43.02	30.06	43.62	35.03	42.49	29.69
$\Phi_f F_n$	(ksi)	-	-	-	-	-	-	-
V_f	(k)	57.8	56.0	44.8	59.9	44.9	61.6	56.0

INTERIOR GIRDER MOMENT TABLE - GIRDERS 2 AND 3								
		0.4 Span 1	Pier 1	0.5 Span 2	Pier 2	0.5 Span 3	Pier 3	0.6 Span 4
I_s	(in⁴)	28458	51716	28458	57658	28458	57658	28458
I_c (n)	(in⁴)	65398	-	65398	-	65398	-	65398
I_c (3n)	(in⁴)	47551	-	47551	-	47551	-	47551
I_c (cr)	(in⁴)	-	57079	-	63138	-	63138	-
S_s	(in³)	1404	2133	1404	2353	1404	2353	1404
S_c (n)	(in³)	1779	-	1779	-	1779	-	1779
S_c (3n)	(in³)	1649	-	1649	-	1649	-	1649
S_c (cr)	(in³)	-	2205	-	2427	-	2427	-
S_x	(in³)	1687	2182	1705	2405	1692	2407	1710
DC1	(k/')	1.044	1.181	1.044	1.215	1.044	1.215	1.044
M_{DC1}	('k)	950	2200	773	2289	824	2106	686
DC2	(k/')	0.308	0.308	0.308	0.532	0.532	0.532	0.532
M_{DC2}	('k)	317	537	169	889	532	1081	333
DW	(k/')	0.327	0.327	0.327	0.327	0.327	0.327	0.327
M_{DW}	('k)	303	656	259	692	275	623	221
LLDF		0.551	0.540	0.530	0.530	0.530	0.544	0.560
M_{LL+IM}	('k)	1642	1953	1583	2054	1562	1931	1487
f_ℓ (Strength I)	(ksi)	0.00	0.00	0.00	0.00	0.00	0.00	0.00
$M_u + \frac{1}{3} f_\ell S_x$	('k)	4912	7823	4336	8605	4841	8298	4208
$\Phi_f M_n$	('k)	8272	9954	8272	10953	8272	10958	8272
f_s DC1	(ksi)	8.12	12.38	6.61	11.67	7.04	10.74	5.86
f_s DC2	(ksi)	2.31	2.92	1.23	4.40	3.87	5.35	2.42
f_s DW	(ksi)	2.20	3.57	1.88	3.42	2.00	3.08	1.61
f_s (LL+IM)	(ksi)	11.08	10.63	10.68	10.16	10.54	9.55	10.03
f_ℓ (Service II)	(ksi)	0.00	0.00	0.00	0.00	0.00	0.00	0.00
$f_s + f_\ell/2$ (Service II)	(ksi)	27.03	32.69	23.61	32.70	26.61	31.58	22.94
Service II Resistance	(ksi)	47.50	47.50	47.50	47.50	47.50	47.50	47.50
$f_s + f_\ell/3$ (Strength I)	(ksi)	35.73	43.09	31.31	42.99	35.09	41.44	30.33
$\Phi_f F_n$	(ksi)	-	-	-	-	-	-	-
V_f	(k)	73.8	71.5	57.2	76.4	57.4	78.7	71.5

EXTERIOR GIRDER MOMENT TABLE - GIRDERS 11 AND 12								
		0.4 Span 1	Pier 1	0.5 Span 2	Pier 2	0.5 Span 3	Pier 3	0.6 Span 4
I_s	(in⁴)	28458	51716	28458	51716	28458	45896	28458
I_c (n)	(in⁴)	65294	-	65294	-	65294	-	65294
I_c (3n)	(in⁴)	47468	-	47468	-	47468	-	47468
I_c (cr)	(in⁴)	-	57049	-	57049	-	51109	-
S_s	(in³)	1404	2133	1404	2133	1404	1912	1404
S_c (n)	(in³)	1778	-	1778	-	1778	-	1778
S_c (3n)	(in³)	1648	-	1648	-	1648	-	1648
S_c (cr)	(in³)	-	2204	-	2204	-	1984	-
S_x	(in³)	1684	2181	1700	2180	1690	1960	1706
DC1	(k/')	1.108	1.244	1.108	1.244	1.108	1.210	1.108
M_{DC1}	('k)	1006	2335	830	2395	938	2109	766
DC2	(k/')	0.231	0.231	0.231	0.231	0.231	0.231	0.231
M_{DC2}	('k)	214	463	185	484	206	421	164
DW	(k/')	0.327	0.327	0.327	0.327	0.327	0.327	0.327
M_{DW}	('k)	303	656	262	686	291	597	232
LLDF		0.551	0.540	0.530	0.530	0.530	0.544	0.560
M_{LL+IM}	('k)	1688	2051	1702	2152	1707	1911	1512
f_ℓ (Strength I)	(ksi)	0.00	0.00	0.00	0.00	0.00	0.00	0.00
$M_u + \frac{1}{3} f_\ell S_x$	('k)	4934	8071	4640	8394	4854	7402	4157
$\Phi_f M_n$	('k)	8266	9950	8266	9948	8266	8958	8266
f_s DC1	(ksi)	8.60	13.14	7.09	13.48	8.02	13.23	6.55
f_s DC2	(ksi)	1.56	2.52	1.35	2.63	1.50	2.55	1.19
f_s DW	(ksi)	2.21	3.57	1.91	3.73	2.12	3.61	1.69
f_s (LL+IM)	(ksi)	11.39	11.17	11.49	11.71	11.52	11.56	10.20
f_ℓ (Service II)	(ksi)	0.00	0.00	0.00	0.00	0.00	0.00	0.00
$f_s + f_\ell/2$ (Service II)	(ksi)	27.17	33.74	25.28	35.07	26.61	34.42	22.70
Service II Resistance	(ksi)	47.50	47.50	47.50	47.50	47.50	47.50	47.50
$f_s + f_\ell/3$ (Strength I)	(ksi)	35.94	44.47	33.51	46.24	35.23	45.37	30.07
$\Phi_f F_n$	(ksi)	-	-	-	-	-	-	-
V_f	(k)	78.7	76.2	61.1	81.3	61.0	83.2	75.8

INTERIOR GIRDER MOMENT TABLE - GIRDERS 20 AND 21								
		0.4 Span 1	Pier 1	0.5 Span 2	Pier 2	0.5 Span 3	Pier 3	0.6 Span 4
I_s	(in⁴)	28458	51716	28458	51716	28458	45896	28458
I_c (n)	(in⁴)	65398	-	65398	-	65398	-	65398
I_c (3n)	(in⁴)	47551	-	47551	-	47551	-	47551
I_c (cr)	(in⁴)	-	57079	-	57079	-	51139	-
S_s	(in³)	1404	2133	1404	2133	1404	1912	1404
S_c (n)	(in³)	1779	-	1779	-	1779	-	1779
S_c (3n)	(in³)	1649	-	1649	-	1649	-	1649
S_c (cr)	(in³)	-	2205	-	2205	-	1984	-
S_x	(in³)	1690	2182	1705	2182	1696	1962	1711
DC1	(k/')	1.043	1.179	1.043	1.179	1.043	1.145	1.043
M_{DC1}	('k)	947	2199	781	2255	883	1986	721
DC2	(k/')	0.185	0.185	0.185	0.185	0.185	0.185	0.185
M_{DC2}	('k)	171	371	148	388	165	338	131
DW	(k/')	0.327	0.327	0.327	0.327	0.327	0.327	0.327
M_{DW}	('k)	303	656	262	686	291	597	232
LLDF		0.551	0.540	0.530	0.530	0.530	0.544	0.560
M_{LL+IM}	('k)	1643	1957	1594	2016	1599	1836	1496
f_ℓ (Strength I)	(ksi)	0.00	0.00	0.00	0.00	0.00	0.00	0.00
$M_u + \frac{1}{3} f_\ell S_x$	('k)	4727	7621	4344	7861	4545	7014	4031
$\Phi_f M_n$	('k)	8272	9954	8272	9952	8272	8962	8272
f_s DC1	(ksi)	8.09	12.37	6.68	12.69	7.55	12.46	6.16
f_s DC2	(ksi)	1.24	2.02	1.08	2.11	1.20	2.04	0.95
f_s DW	(ksi)	2.20	3.57	1.91	3.73	2.12	3.61	1.69
f_s (LL+IM)	(ksi)	11.09	10.65	10.75	10.97	10.79	11.10	10.09
f_ℓ (Service II)	(ksi)	0.00	0.00	0.00	0.00	0.00	0.00	0.00
$f_s + f_\ell/2$ (Service II)	(ksi)	25.95	31.81	23.64	32.80	24.89	32.55	21.93
Service II Resistance	(ksi)	47.50	47.50	47.50	47.50	47.50	47.50	47.50
$f_s + f_\ell/3$ (Strength I)	(ksi)	34.38	41.99	31.37	43.30	32.99	42.98	29.09
$\Phi_f F_n$	(ksi)	-	-	-	-	-	-	-
V_f	(k)	73.9	71.5	57.3	76.2	57.2	78.1	71.1

I_s , S_s : Non-composite moment of inertia and section modulus of the steel section used for computing f_s (Total-Strength I, and Service II) due to non-composite dead loads (in.⁴ and in.³).

I_c (n), S_c (n): Composite moment of inertia and section modulus of the steel and deck based upon the modular ratio, "n", used for computing f_s (Total-Strength I, and Service II) in uncracked sections due to short-term composite live loads (in.⁴ and in.³).

I_c (3n), S_c (3n): Composite moment of inertia and section modulus of the steel and deck based upon 3 times the modular ratio, "3n", used for computing f_s (Total-Strength I, and Service II) in uncracked sections, due to long-term composite (superimposed) dead loads (in.⁴ and in.³).

I_c (cr), S_c (cr): Composite moment of inertia and section modulus of the steel and longitudinal deck reinforcement, used for computing f_s (Total-Strength I and Service II) in cracked sections, due to both short-term composite live loads and long-term composite (superimposed) dead loads (in.⁴ and in.³).

S_x : Section modulus about the major axis of a section to the controlling flange, tension or compression, taken as yield moment with respect to the controlling flange over the yield strength of the controlling flange (in.³).

DC1: Un-factored non-composite dead load (kips/ft.).

M_{DC1}: Un-factored moment due to non-composite dead load (kip-ft.).

DC2: Un-factored long-term composite (superimposed excluding future wearing surface) dead load (kips/ft.).

M_{DC2}: Un-factored moment due to long-term composite (superimposed excluding future wearing surface) dead load (kip-ft.).

DW: Un-factored long-term composite (superimposed future wearing surface only) dead load (kips/ft.).

M_{DW} : Un-factored moment due to long-term composite (superimposed future wearing surface only) dead load (kip-ft.).

LLDF: Live Load Distribution Factor for moment and shear computed according to Article 4.6.2.2 and further IDOT provisions.

M_{LL+IM}: Un-factored live load moment plus dynamic load allowance (impact) (kip-ft.).

M_u : Strength I load combination of factored design moments (kip-ft.). $1.25 (M_{DC1} + M_{DC2}) + 1.5 M_{DW} + 1.75 M_{LL+IM}$

f_ℓ : Factored calculated flange lateral bending stress as calculated using Article 6.10.1.6 and as further simplified by IDOT provisions (ksi).

$\Phi_f M_n$: Factored nominal flexural resistance of the section determined as specified in Article 6.10.7.1 or A6 as applicable (kip-ft.).

f_s DC1: Un-factored stress at edge of flange for controlling steel flange due to vertical non-composite dead loads as calculated below (ksi).
M_{DC1} / S_s

f_s DC2: Un-factored stress at edge of flange for controlling steel flange due to vertical composite dead loads as calculated below (ksi).
M_{DC2} / S_c (3n) or M_{DC2} / S_c (cr) as applicable.

f_s DW: Un-factored stress at edge of flange for controlling steel flange due to vertical composite future wearing surface loads as calculated below (ksi).
M_{DW} / S_c (3n) or M_{DW} / S_c (cr) as applicable.

f_s (LL+ IM): Un-factored stress at edge of flange for controlling steel flange due to vertical composite live load plus impact loads as calculated below (ksi).
M_{LL+IM} / S_c (n) or M_{LL+IM} / S_c (cr) as applicable.

$f_s + f_\ell / 2$ (Service II): Sum of stresses as computed below (ksi).
f_s DC1 + f_s DC2 + f_s DW + 1.3 f_s (LL+ IM) + f_ℓ /2

Service II Resistance: Composite ($0.95R_hF_{yf}$) or noncomposite ($0.80R_hF_{yf}$) stress capacity according to Article 6.10.4.2 (ksi).

$f_s + f_\ell / 3$ (Strength I): Sum of stresses as computed below on non-compact sections (ksi).
1.25 (f_s DC1 + f_s DC2) + 1.5 f_s DW + 1.75 f_s (LL+ IM) + f_ℓ /3

$\Phi_f F_n$: Factored nominal flexural resistance of the section as specified in Article 6.10.7.2 or 6.10.8 as applicable (ksi).

V_f: Maximum factored shear range in span computed according to Article 6.10.10.

MODEL: SHEET
FILE NAME: C:\TRANSYSTEMS\PW_LOCAL\TRANSYSTEMS-PW-01\D013662080C53_J80-SHT-042-STEELDET1.DGN

10/28/2025

exp.

USER NAME =	DESIGNED - CCE	REVISED -
	CHECKED - BAR	REVISED -
PLOT SCALE =	DRAWN - MTR	REVISED -
PLOT DATE =	CHECKED - BAR	REVISED -

STATE OF ILLINOIS
DEPARTMENT OF TRANSPORTATION

STRUCTURAL STEEL DETAILS 1
STRUCTURE NOS. 099-0902 (EB) & 099-0903 (WB)

SHEET S-34 OF S-51 SHEETS

F.A.I. RTE.	SECTION	COUNTY	TOTAL SHEETS	SHEET NO.
80	2025-2113-B	WILL	53	36
		CONTRACT NO. 80C53		
		ILLINOIS	FED. AID PROJECT	

TOP OF WEB ELEVATIONS (FOR FABRICATION ONLY)

Girder	℄ Brg. W. Abut.	℄ Splice 1	℄ Brg. Pier 1	℄ Splice 2	℄ Splice 3	℄ Brg. Pier 2	℄ Splice 4	℄ Splice 5	℄ Brg. Pier 3	℄ Splice 6	℄ Brg. E. Abut.
1	577.15	577.81	577.92	578.03	578.03	577.97	577.91	577.24	576.87	576.51	575.47
2	577.53	578.19	578.30	578.41	578.42	578.36	578.30	577.63	577.27	576.91	575.88
3	577.65	578.32	578.43	578.54	578.56	578.50	578.44	577.78	577.42	577.07	576.04
4	577.78	578.43	578.55	578.68	578.74	578.66	578.58	577.94	577.60	577.25	576.20
5	577.88	578.54	578.66	578.79	578.86	578.78	578.70	578.07	577.73	577.38	576.34
6	577.97	578.63	578.76	578.89	578.96	578.89	578.81	578.19	577.84	577.50	576.46
7	577.87	578.54	578.67	578.80	578.88	578.80	578.73	578.11	577.77	577.43	576.40
8	577.75	578.42	578.55	578.69	578.77	578.70	578.62	578.01	577.67	577.33	576.31
9	577.59	578.27	578.41	578.54	578.63	578.56	578.49	577.89	577.55	577.21	576.19
10	577.44	578.13	578.26	578.40	578.50	578.43	578.36	577.76	577.42	577.09	576.07
11	577.29	577.99	578.12	578.26	578.37	578.30	578.23	577.64	577.30	576.97	575.96
12	577.27	577.98	578.12	578.26	578.37	578.30	578.23	577.65	577.32	576.98	575.98
13	577.40	578.10	578.24	578.39	578.50	578.44	578.37	577.79	577.46	577.13	576.14
14	577.52	578.23	578.38	578.52	578.64	578.58	578.52	577.94	577.62	577.29	576.29
15	577.65	578.36	578.51	578.65	578.78	578.72	578.66	578.09	577.77	577.44	576.45
16	577.74	578.46	578.61	578.76	578.89	578.83	578.77	578.21	577.89	577.57	576.58
17	577.81	578.54	578.69	578.84	578.98	578.92	578.87	578.31	577.99	577.67	576.69
18	577.69	578.43	578.58	578.73	578.88	578.82	578.77	578.22	577.90	577.58	576.61
19	577.56	578.30	578.46	578.61	578.76	578.71	578.66	578.11	577.80	577.48	576.51
20	577.41	578.16	578.31	578.47	578.63	578.57	578.52	577.99	577.67	577.35	576.39
21	577.26	578.01	578.17	578.32	578.49	578.44	578.39	577.86	577.54	577.23	576.27
22	577.10	577.86	578.02	578.18	578.35	578.30	578.25	577.73	577.41	577.10	576.15

GIRDER REACTION TABLE - GIRDER 1

		W. Abut.*	Pier 1	Pier 2	Pier 3	E. Abut.*
LLDF		0.504	0.504	0.504	0.504	0.504
OCF		1.035	1.000	1.000	1.000	1.035
R_{DC1}	(k)	86.05	178.70	179.96	174.28	83.70
R_{DC2}	(k)	18.46	56.11	84.32	103.85	25.47
R_{DW}	(k)	14.15	49.59	50.09	47.88	12.20
R_{LL}	(k)	52.44	104.90	106.52	103.69	50.86
R_{IM}	(k)	11.18	18.77	18.66	18.75	11.06
R_{Total} (Strength I)(Impact)	(k)	263.20	584.32	624.55	633.75	263.12
R_{Total} (Strength I)(No Impact)	(k)	243.63	551.47	591.90	600.94	243.76

GIRDER REACTION TABLE - GIRDERS 2 AND 3

		W. Abut.*	Pier 1	Pier 2	Pier 3	E. Abut.*
LLDF		0.737	0.737	0.737	0.737	0.737
OCF		1.035	1.000	1.000	1.000	1.035
R_{DC1}	(k)	86.56	165.96	167.16	161.97	83.58
R_{DC2}	(k)	14.01	42.47	63.50	77.87	19.27
R_{DW}	(k)	14.16	49.57	50.10	47.86	12.22
R_{LL}	(k)	76.68	153.37	155.75	151.60	74.36
R_{IM}	(k)	16.35	27.44	27.28	27.42	16.19
R_{Total} (Strength I)(Impact)	(k)	309.76	651.31	683.78	684.88	305.36
R_{Total} (Strength I)(No Impact)	(k)	281.14	603.29	636.04	636.89	277.03

GIRDER REACTION TABLE - GIRDERS 11 AND 12

		W. Abut.*	Pier 1	Pier 2	Pier 3	E. Abut.*
LLDF		0.680	0.680	0.680	0.680	0.680
OCF		1.035	1.000	1.000	1.000	1.035
R_{DC1}	(k)	88.06	175.88	175.73	166.53	82.25
R_{DC2}	(k)	10.00	35.02	35.44	33.52	8.80
R_{DW}	(k)	14.16	49.61	50.19	47.48	12.46
R_{LL}	(k)	70.77	141.61	143.28	138.44	68.65
R_{IM}	(k)	15.09	25.33	25.08	25.07	14.96
R_{Total} (Strength I)(Impact)	(k)	294.07	630.19	633.88	607.43	278.82
R_{Total} (Strength I)(No Impact)	(k)	267.66	585.86	589.99	563.55	252.64

GIRDER REACTION TABLE - GIRDERS 20 AND 21

		W. Abut.*	Pier 1	Pier 2	Pier 3	E. Abut.*
LLDF		0.737	0.737	0.737	0.737	0.737
OCF		1.035	1.000	1.000	1.000	1.035
R_{DC1}	(k)	84.62	165.89	165.69	156.98	79.14
R_{DC2}	(k)	8.01	28.05	28.38	26.85	7.05
R_{DW}	(k)	14.16	49.61	50.19	47.48	12.46
R_{LL}	(k)	76.69	153.48	155.29	150.05	74.40
R_{IM}	(k)	16.35	27.45	27.18	27.17	16.20
R_{Total} (Strength I)(Impact)	(k)	299.84	633.47	637.20	611.14	284.97
R_{Total} (Strength I)(No Impact)	(k)	271.23	585.43	589.63	563.60	256.62

* RDC1 includes service reaction due to weight of approach slab and parapet on approach slab.

LLDF: For definition, see Sheet SA-62.

OCF: Obtuse Correction Factor according to Article 4.6.2.2.3c or as further simplified by IDOT provisions.

R_{DC1}: Un-factored reaction due to non-composite dead load (kip).

R_{DC2}: Un-factored reaction due to long-term composite (superimposed excluding future wearing surface) dead load (kip).

R_{DW}: Un-factored reaction due to long-term composite (superimposed future wearing surface only) dead load (kip).

R_{LL}: Un-factored live load reaction (kip).

R_{IM}: Un-factored dynamic load allowance (impact) (kip).

R_{Total} (Strength I)(Impact): Strength I load combination of factored design reactions (kip). $1.25\ (R_{DC1} + R_{DC2}) + 1.5R_{DW} + 1.75\ (R_{LL} + R_{IM})$

R_{Total} (Strength I)(No Impact): Strength I load combination of factored design reactions, not including dynamic load allowance (Impact) (kip). $1.25\ (R_{DC1} + R_{DC2}) + 1.5R_{DW} + 1.75\ (R_{LL})$

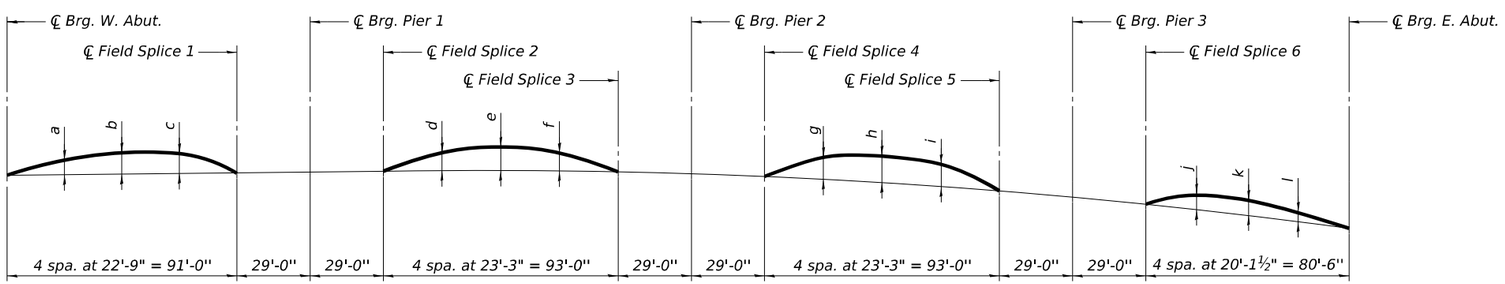

CAMBER DIAGRAM

Girder No.	a	b	c	d	e	f	g	h	i	j	k	l
1	2 1/4"	3 1/4"	3"	3 1/2"	4"	3 1/2"	3 3/4"	4 1/4"	3 3/4"	2 1/2"	2 1/2"	1 1/2"
2-3	2"	3 1/4"	3"	3 3/4"	4 1/4"	3 3/4"	3 1/4"	4"	3 1/4"	2 1/2"	2 1/2"	1 1/2"
4-10, 13-21	2"	3 1/4"	3"	3 1/2"	4"	3 1/2"	3 1/2"	4 1/4"	3 1/2"	2 1/4"	2 1/4"	1 1/4"
11-12	2 1/4"	3 1/2"	3 1/4"	3 1/2"	4 1/4"	3 1/2"	3 3/4"	4 1/4"	3 1/2"	2 1/2"	2 1/2"	1 1/2"
22	2"	3 1/4"	3"	3 1/2"	4"	3 1/2"	3 1/2"	4"	3 1/2"	2 1/4"	2 1/4"	1 1/4"

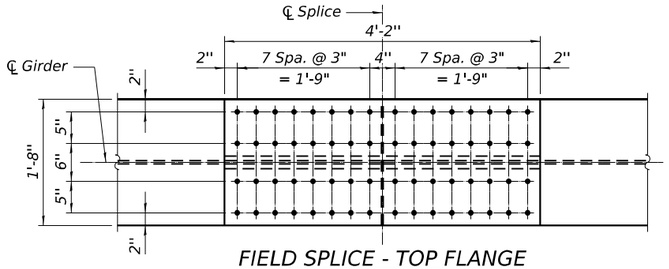

FIELD SPLICE - TOP FLANGE

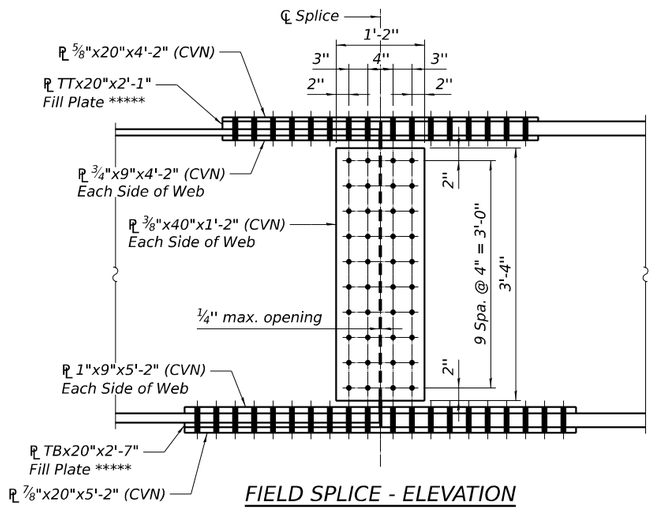

FIELD SPLICE - ELEVATION

(Looking North. Splices 1, 3, and 5 shown. Splices 2, 4, and 6 similar, opposite hand.)
(132 Required)

***** For fill plate thickness TT and TB, see table on this sheet.

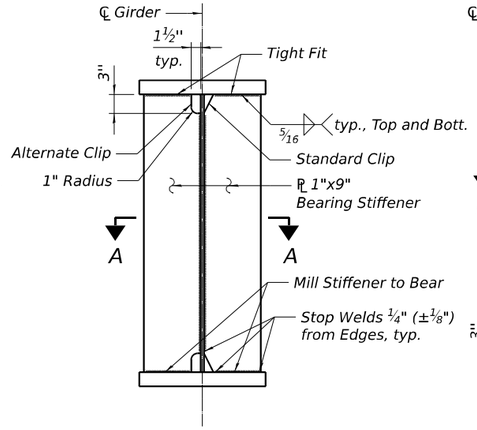

BEARING STIFFENER

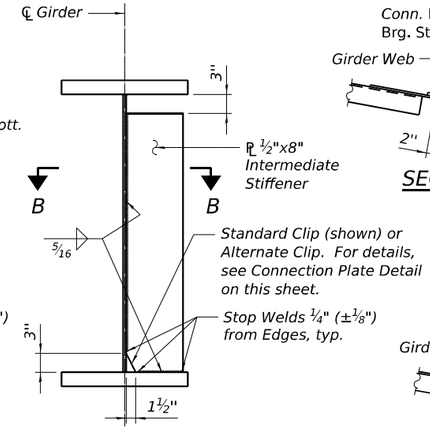

INTERMEDIATE STIFFENER

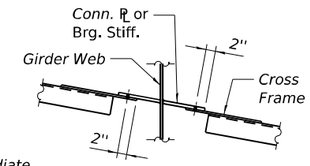

SECTION D-D

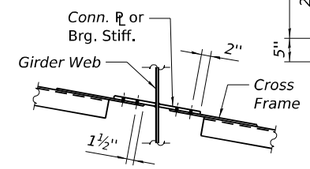

SECTION E-E

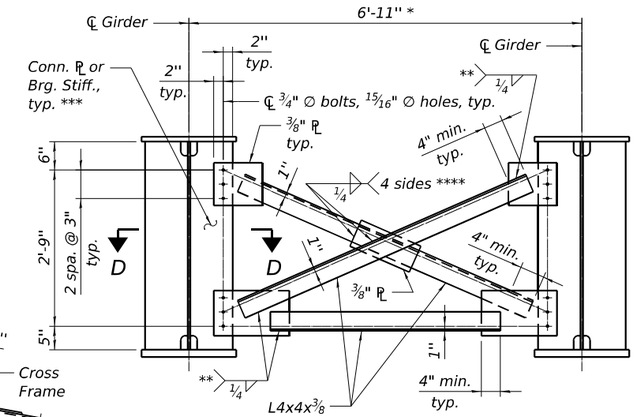

CROSS FRAME CF1

(534 Required)

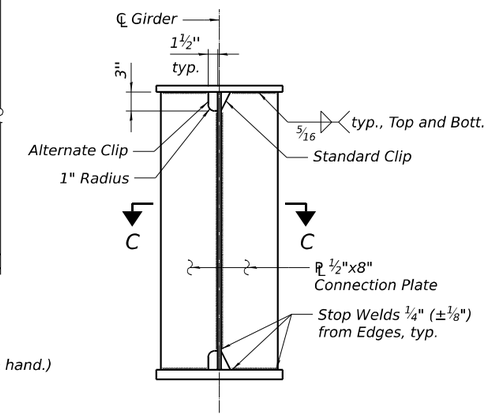

CONNECTION PLATE

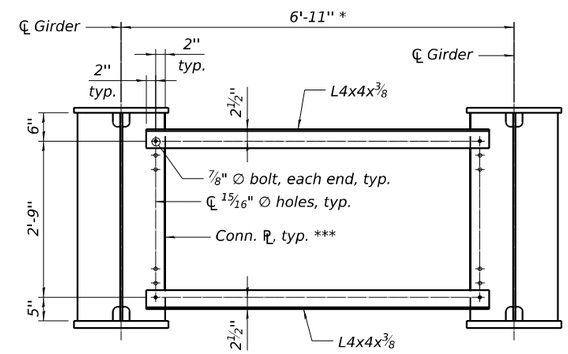

Note: Metallizing not required for temporary CF2 angle members.

CROSS FRAME CF2 AT STAGE CONST. LINES

(56 Required)

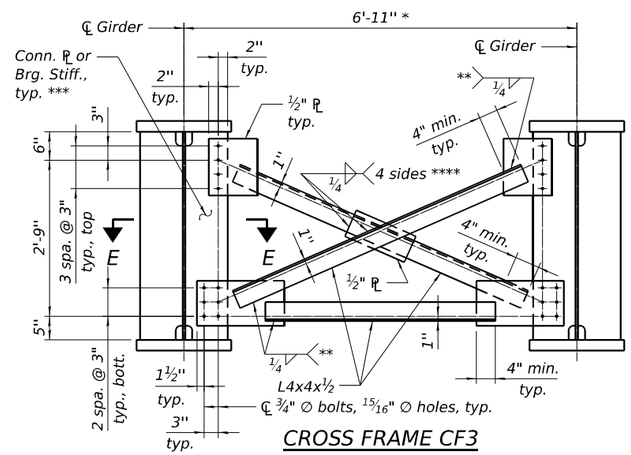

CROSS FRAME CF3

(86 Required)

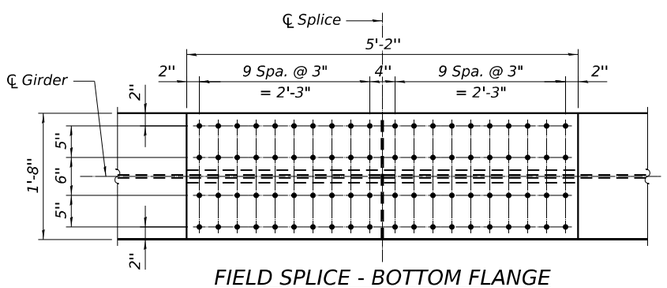

FIELD SPLICE - BOTTOM FLANGE

(See Note 5.)

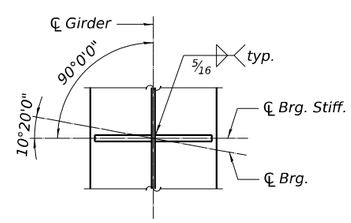

SECTION A-A AT ABUTMENTS

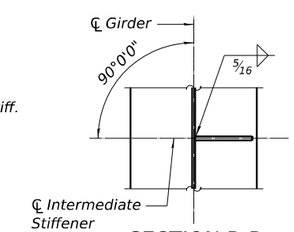

SECTION B-B

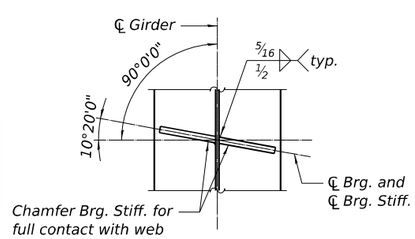

SECTION A-A AT PIERS

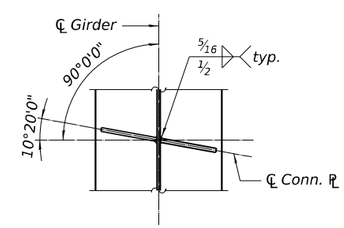

SECTION C-C

FIELD SPLICE FILL PLATE THICKNESS

Girders	Field Splice											
	1		2		3		4		5		6	
	TT	TB	TT	TB	TT	TB	TT	TB	TT	TB	TT	TB
1-3	1 1/4"	3/4"	1 1/4"	3/4"	1 1/2"	1"	1 1/2"	1"	1 1/2"	1"	1 1/2"	1"
4-22	1 1/4"	3/4"	1 1/4"	3/4"	1 1/4"	3/4"	1 1/4"	3/4"	1"	1/2"	1"	1/2"

* Measured perpendicular to girders.

** Fillet weld angles along three sides on one face of gusset plate; however, if cross frames are galvanized, weld all-around. Typical.

*** For plate orientation, weld details, and corner clip details, see bearing stiffener and connection plate details on this sheet.

**** If cross frames are galvanized, weld all-around.

Cross Frame Stage Construction Sequence:

1. Install CF2 cross frames in Stage II Construction prior to placing deck concrete.
2. CF2 cross frame bolts shall be finger-tight.
3. Remove CF2 cross frames and replace with CF1 cross frames in Stage II Construction after deck pour is complete.

Notes:

1. All structural steel shall be AASHTO M270 Grade 50 except angle members and gusset plates of CF1 and CF2 cross frames which may be Grade 36.
2. Load carrying components designated "CVN" shall conform to the Charpy-V-Notch Impact Energy Requirement, Zone 2.
3. Bolts for field splices shall be 7/8" diameter, holes 15/16" diameter.
4. Bolts in the bottom flange of field splices shall be installed with the bolt head below the flange and nut above the flange.
5. Two hardened washers required for each set of oversized holes in cross frame connections.
6. Omit cross frame connection plates on exterior side of Girders 1, 11, 12, and 22.

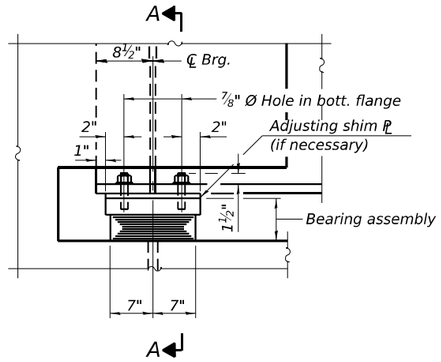

ELEVATION AT ABUT.

(West Abut. shown, East Abut. similar)

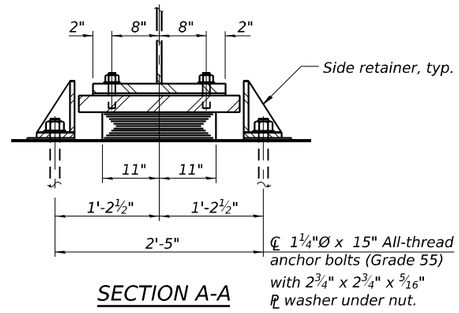

SECTION A-A

TYPE I ELASTOMERIC EXP. BRG. AT ABUTMENTS

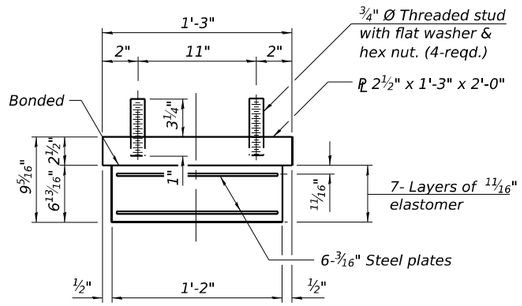

BEARING ASSEMBLY

Note:
Shim plates shall not be placed under bearing assembly.

Notes:
Side retainers and stainless steel plates shall be included in the cost of Furnishing Elastomeric Bearing Assembly, Type I.

Anchor bolts and side retainers at all supports shall be installed as each member is erected unless an equivalent temporary means of lateral restraint is used.

All bearing plates, side retainers, anchor bolts, nuts, washers and pintles shall be galvanized according to M111 or M232 as applicable.

The structural steel plates of the Bearing Assembly shall conform to the requirements of AASHTO M270 Grade 50.

Two ⅛ in. adjusting shims shall be provided for each bearing in addition to all other plates or shims and placed as shown on bearing details.

The structural steel plates and pintles of the fixed bearing shall conform to the requirements of AASHTO M270 Grade 50.

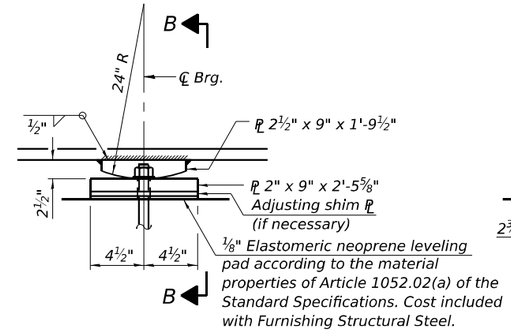

ELEVATION AT PIER

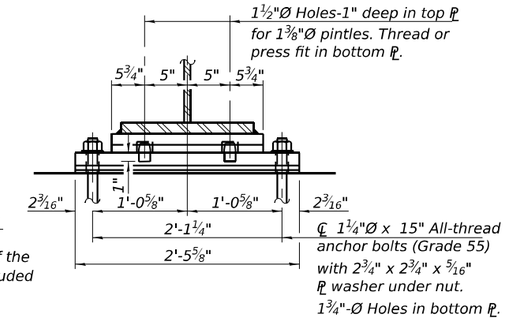

SECTION B-B

FIXED BEARING AT PIER 2

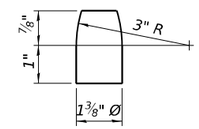

PINTLE

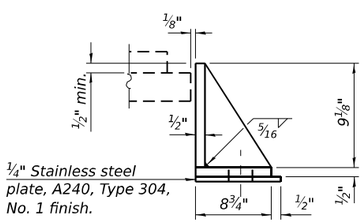

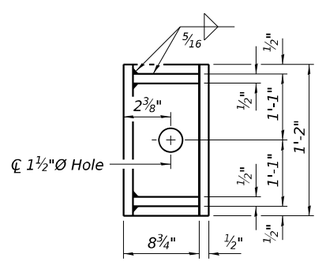

SIDE RETAINER

Equivalent rolled angle with stiffeners will be allowed in lieu of welded plates.

BILL OF MATERIAL

Item	Unit	Total
Furnishing Elastomeric Bearing Assembly, Type I	Each	44

Note:
Anchor Bolts to be furnished and installed by the Erection Contract (62F94).

I-2E-1 5/15/2023

exp.

USER NAME =	DESIGNED - BAR	REVISED -	
	CHECKED - KK	REVISED -	
PLOT SCALE =	DRAWN - MTR	REVISED -	
PLOT DATE =	CHECKED - BAR	REVISED -	

STATE OF ILLINOIS
DEPARTMENT OF TRANSPORTATION

ELASTOMERIC EXPANSION AND FIXED BEARING DETAILS
STRUCTURE NOS. 099-0902 (EB) & 099-0903 (WB)

SHEET S-37 OF S-51 SHEETS

F.A.I. RTE.	SECTION	COUNTY	TOTAL SHEETS	SHEET NO.
80	2025-2113-B	WILL	53	39
		CONTRACT NO. 80C53		
	ILLINOIS	FED. AID PROJECT		

MODEL: SHEET
FILE NAME: C:\TRANSYSTEMS\PW_LOCAL\TRANSYSTEMS-PW-01\D0136620\80C53_I80-SHT-045-BRGDET1.DGN

10/28/2025

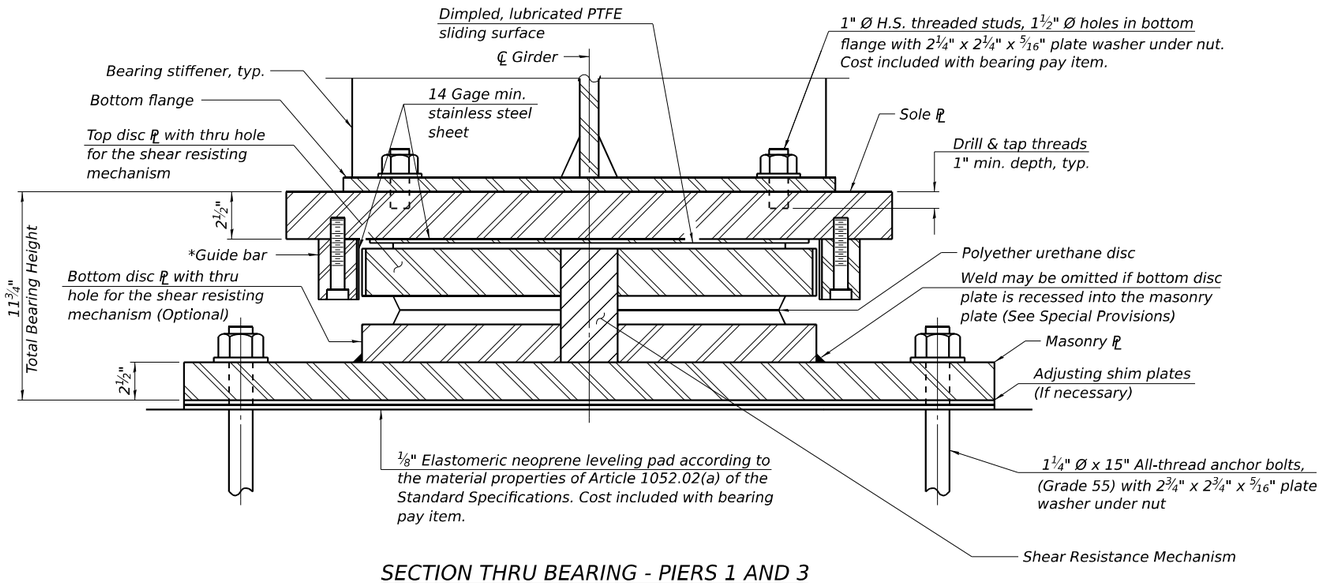

SECTION THRU BEARING - PIERS 1 AND 3

*As alternates to the bolted connection shown, the guide bars may be connected to the sole plate by groove welds or the guide bars and sole plate may be fabricated as a single piece.

DESIGN DATA

	Pier 1	Pier 3
Unfactored Vertical Dead Load Reaction (R_{DC})	208.4 kips	239.8 kips
Unfactored Vertical Wearing Surface Reaction (R_{DW})	49.57 kips	47.86 kips
Unfactored Vertical Live Load without Impact Reaction (R_{LL})	153.37 kips	151.6 kips
Maximum Strength or Extreme Event Lateral Reaction (H_u)	56.5 kips	64.8 kips
Maximum Strength Limit State Rotation (Θ_u according to Article 14.4.2.2)	0.0093 rad	0.0104 rad
Unfactored Design Thermal Movement from 50° F (ΔT)	0.82 in.	0.82 in.
Service I Factored Lateral Reaction	23.4 kips	23.6 kips
Service I Rotation	0.0026 rad	0.0034 rad
Strength I Factored Total Longitudinal Movement	1.98 in.	1.98 in.
Service I Factored Vertical Reaction	411.4 kips	439.3 kips
Strength I Factored Vertical Reaction	603.3 kips	636.9 kips

Service I Load Factors = 1.0DC + 1.0DW + 1.00LL
Strength I Load Factors = 1.25DC + 1.5DW + 1.75LL + 1.2TU
Extreme Event Load Factors = 1.0EQ

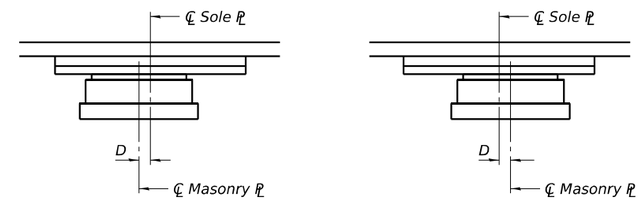

BELOW 50°F.
(Move masonry ℙ away from fixed bearing)

ABOVE 50°F.
(Move masonry ℙ toward fixed bearing)

SETTING ANCHOR BOLTS AT EXPANSION BEARING

D=⅛" per each 100' of expansion for every 15° temp. change from the normal temp. of 50° F.

NOTES:

1. Two ⅛ in. adjusting shims shall be provided for each bearing in addition to all other plates or shims and placed as shown on bearing details. Shim plates not included in total bearing height. Cost included with bearing pay item.

2. Total bearing height is estimated based on manufacturer data. Actual bearing height may differ from contract plans. The Contractor shall be responsible for verifying bearing heights and adjusting seat elevations, if required, prior to placing pier or abutment concrete.

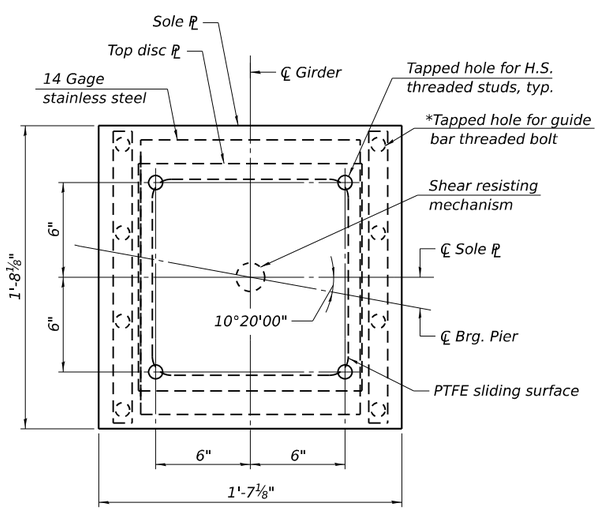

SOLE PLATE AND TOP DISC PLATE PLAN

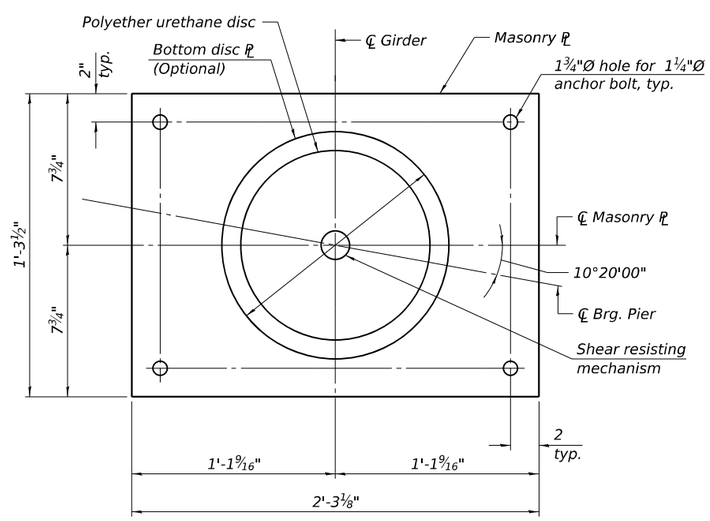

MASONRY PLATE AND BOTTOM DISC PLATE PLAN

Note:
Anchor Bolts to be furnished and installed by the Erection Contract (62F94).

BILL OF MATERIAL

	Item	Unit	Total
**	Furnishing High Load Multi-Rotational Bearings, Disc, Guided Expansion-500k	Each	44

** The value specified in the pay item name is an approximate vertical load capacity that is used for letting and bidding purposes only. Exact bearing capacity will vary subject to final design.

HLMR-D-GE 5/15/2023

exp.

USER NAME =	DESIGNED - BAR	REVISED -	STATE OF ILLINOIS DEPARTMENT OF TRANSPORTATION
	CHECKED - KK	REVISED -	
PLOT SCALE =	DRAWN - MTR	REVISED -	
PLOT DATE =	CHECKED - BAR	REVISED -	

GUIDED EXPANSION HLMR DISC BEARING DETAILS
STRUCTURE NOS. 099-0902 (EB) & 099-0903 (WB)
SHEET S-38 OF S-51 SHEETS

F.A.I. RTE.	SECTION	COUNTY	TOTAL SHEETS	SHEET NO.
80	2025-2113-B	WILL	53	40
		CONTRACT NO. 80C53		
		ILLINOIS	FED. AID PROJECT	

MODEL: SHEET
FILE NAME: C:\TRANSYSTEMS\PW_LOCAL\TRANSYSTEMS-PW-01\D0136620\80C53_I80-SHT-046-BRGDET2.DGN
10/28/2025

BRG. SEAT ELEVATIONS

Girder	Elev.
12	572.71
13	572.83
14	572.95
15	573.08
16	573.17
17	573.25
18	573.13
19	573.00
20	572.84
21	572.69
22	572.54

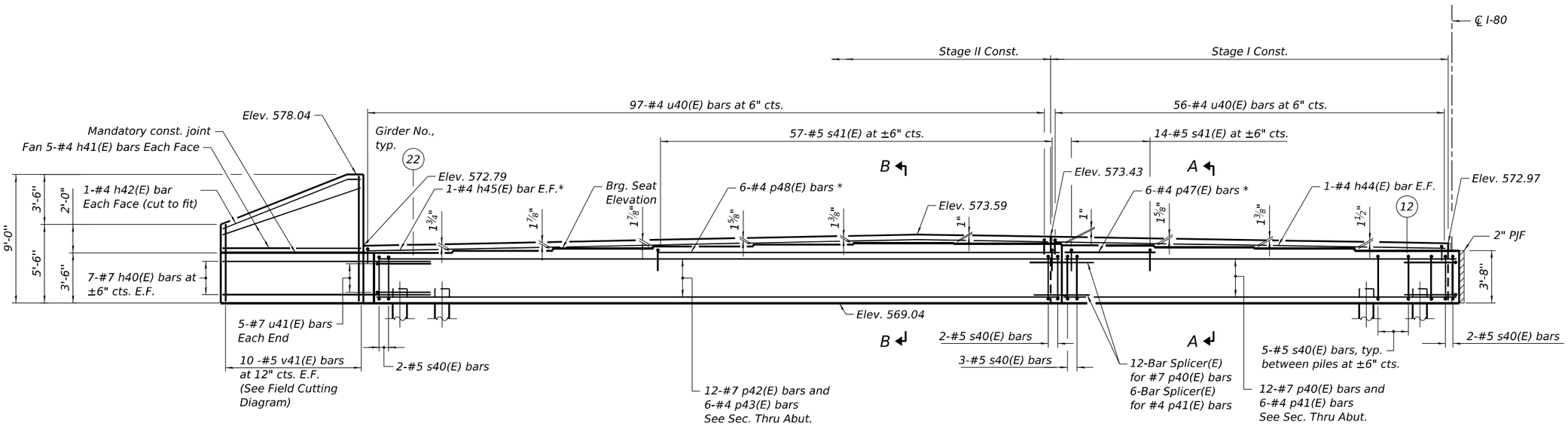

* Cut to fit as required.

ELEVATION

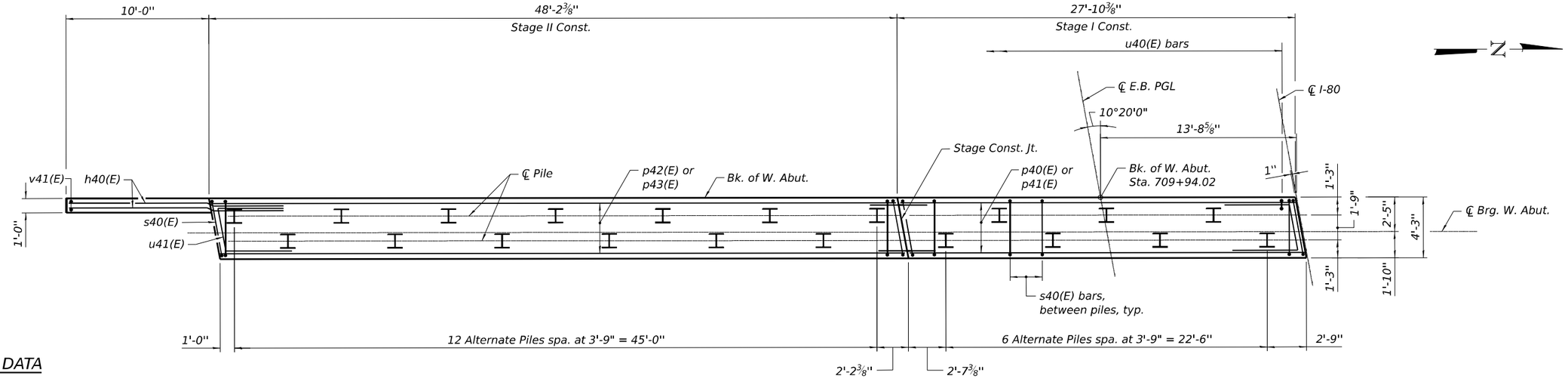

PILE DATA

Type: HP 12x53 with pile shoes
Nominal Required Bearing: 418 kips
Factored Resistance Available: 230 kips
Est. Length: 61'
No. Production Piles: 19
No. Test Piles: 1

PLAN - PILE CAP

Notes:

1. For Section A-A and B-B, see Sheet S-45.
2. For plan dimensions, see Sheet S-43.
3. Pour steps monolithically with cap.

FOR INFORMATION ONLY

MODEL: SHEET
FILE NAME: C:\TRANSYSTEMS\PW_LOCAL\TRANSYSTEMS-PW-01\D0136620\80C53_I80_ 990902_0903-62F94-067-WABUTEB.DGN

HNTB

USER NAME =	DESIGNED - SH	REVISED -	
	CHECKED - APC	REVISED -	
PLOT SCALE =	DRAWN - LK	REVISED -	
PLOT DATE =	CHECKED - SH	REVISED -	

STATE OF ILLINOIS
DEPARTMENT OF TRANSPORTATION

WEST ABUTMENT EB
STRUCTURE NO. 099-0902 (EB)

SHEET S-39 OF S-51 SHEETS

F.A.I. RTE.	SECTION	COUNTY	TOTAL SHEETS	SHEET NO.
80	2025-21113-B	WILL	53	41
		CONTRACT NO. 80C53		
	ILLINOIS	FED. AID PROJECT		

10-28-2025, 10:40:15

BRG. SEAT ELEVATIONS

Girder	Elev.
1	572.59
2	572.96
3	573.09
4	573.21
5	573.31
6	573.40
7	573.30
8	573.18
9	573.03
10	572.87
11	572.72

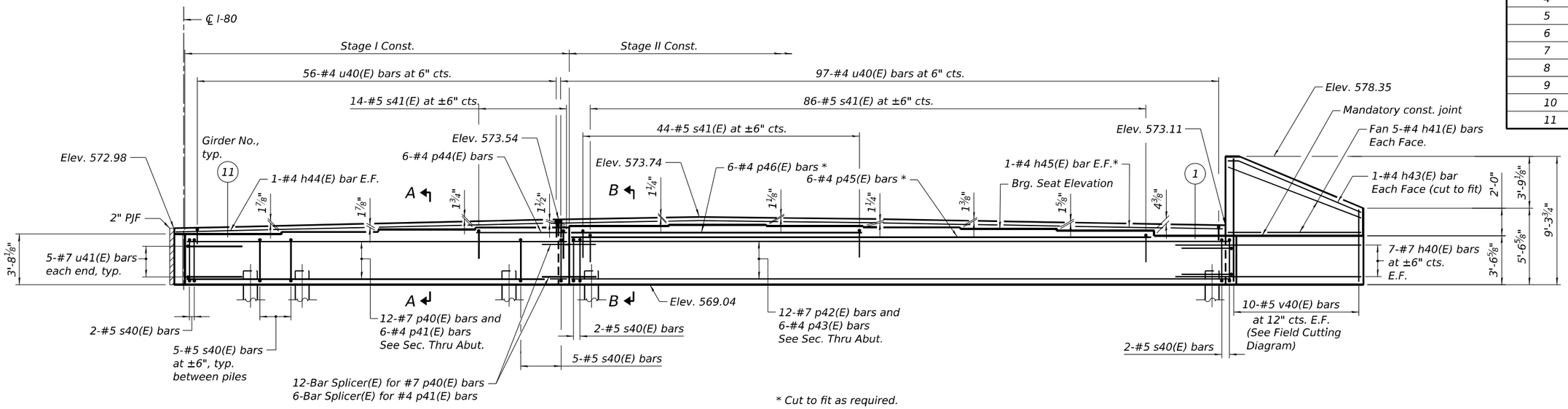

ELEVATION

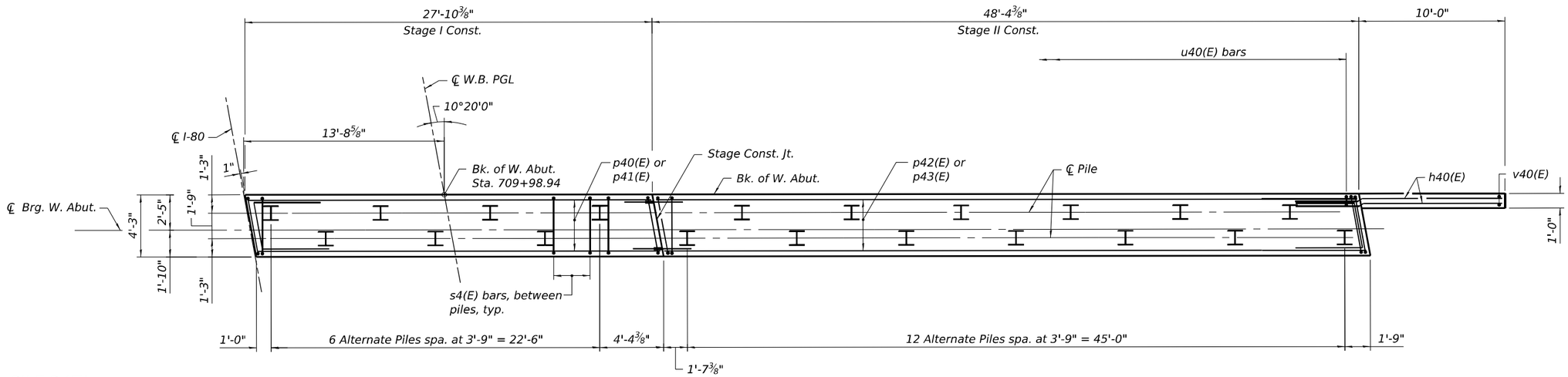

PILE DATA

Type: HP 12x53 with pile shoes
Nominal Required Bearing: 418 kips
Factored Resistance Available: 230 kips
Est. Length: 57'
No. Production Piles: 19
No. Test Piles: 1

PLAN - PILE CAP

Notes:
1. For Section A-A and B-B, see Sheet S-45.
2. For plan dimensions, see Sheet S-43.
3. Pour steps monolithically with cap.

FOR INFORMATION ONLY

MODEL: SHEET
FILE NAME: C:\TRANSYSTEMS\PW_LOCAL\TRANSYSTEMS-PW-01\D0136620\80C53_I80_0990902_0903-62F94-068-WABUTWB.DGN

10-28-2025, 10:40:18

HNTB	USER NAME =	DESIGNED - SH	REVISED -
		CHECKED - APC	REVISED -
	PLOT SCALE =	DRAWN - LK	REVISED -
	PLOT DATE =	CHECKED - SH	REVISED -

STATE OF ILLINOIS
DEPARTMENT OF TRANSPORTATION

WEST ABUTMENT WB
STRUCTURE NO. 099-0903 (WB)

SHEET S-40 OF S-51 SHEETS

F.A.I. RTE.	SECTION	COUNTY	TOTAL SHEETS	SHEET NO.
80	2025-21113-B	WILL	53	42
		CONTRACT NO. 80C53		
	ILLINOIS	FED. AID PROJECT		

BRG. SEAT ELEVATIONS

Girder	Elev.
1	570.91
2	571.32
3	571.47
4	571.63
5	571.77
6	571.90
7	571.83
8	571.74
9	571.62
10	571.51
11	571.39

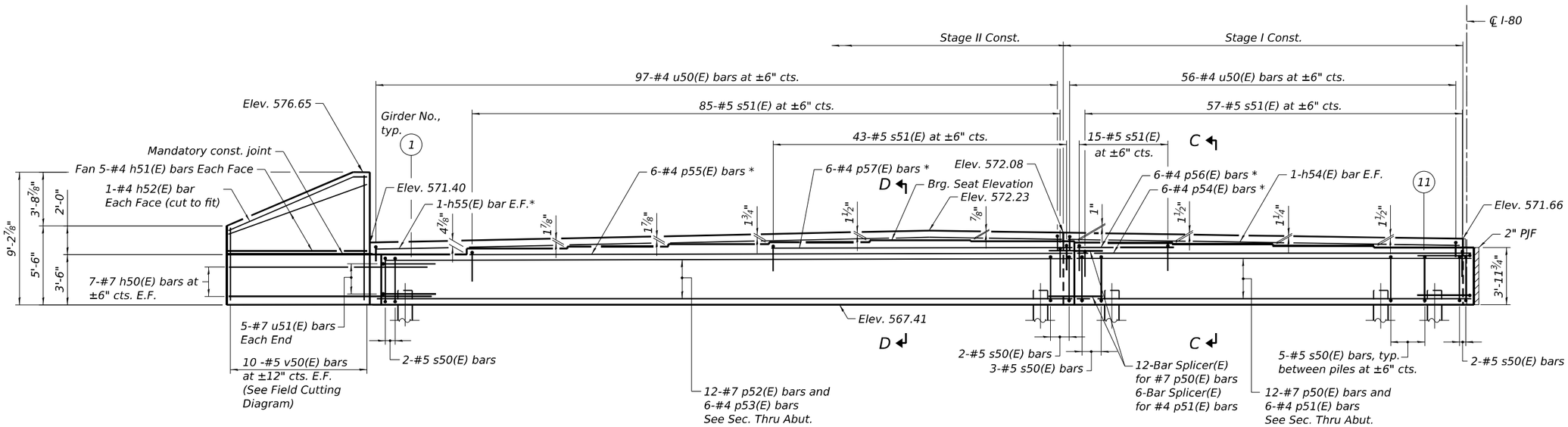

* Cut to fit as required.

ELEVATION

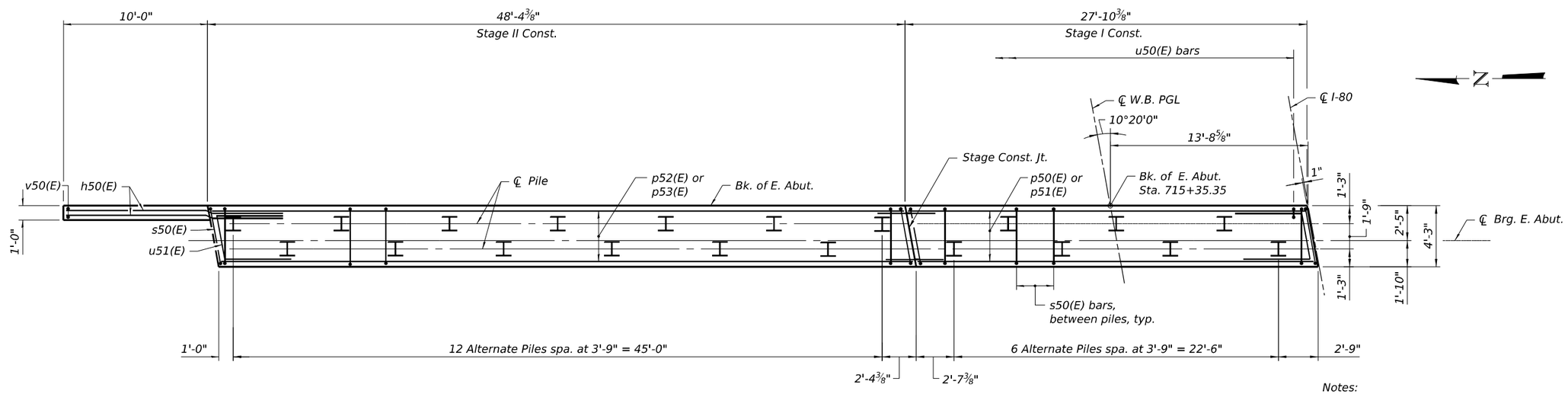

PLAN - PILE CAP

PILE DATA

Type: HP 12x53 with pile shoes
Nominal Required Bearing: 418 kips
Factored Resistance Available: 230 kips
Est. Length: 61'
No. Production Piles: 19
No. Test Piles: 1

Notes:

1. For Section C-C and D-D see Sheet S-45.
2. For Plan dimensions, see Sheet S-44.
3. Pour steps monothically with cap.

FOR INFORMATION ONLY

MODEL: SHEET
FILE NAME: C:\TRANSYSTEMS\PW_LOCAL\TRANSYSTEMS-PW-01\D0136620\80C53_I80_0990902_0903-62F94-069-EABUTWB.DGN
10-28-2025, 10:40:20

HNTB

USER NAME =	DESIGNED - SH	REVISED -	
	CHECKED - APC	REVISED -	
PLOT SCALE =	DRAWN - LK	REVISED -	
PLOT DATE =	CHECKED - SH	REVISED -	

STATE OF ILLINOIS
DEPARTMENT OF TRANSPORTATION

EAST ABUTMENT WB
STRUCTURE NO. 099-0903 (WB)
SHEET S-41 OF S-51 SHEETS

F.A.I. RTE.	SECTION	COUNTY	TOTAL SHEETS	SHEET NO.
80	2025-21113-B	WILL	53	43
		CONTRACT NO. 80C53		
		ILLINOIS	FED. AID PROJECT	

BRG. SEAT ELEVATIONS

Girder	Elev.
12	571.41
13	571.57
14	571.73
15	571.89
16	572.02
17	572.12
18	572.04
19	571.94
20	571.82
21	571.70
22	571.59

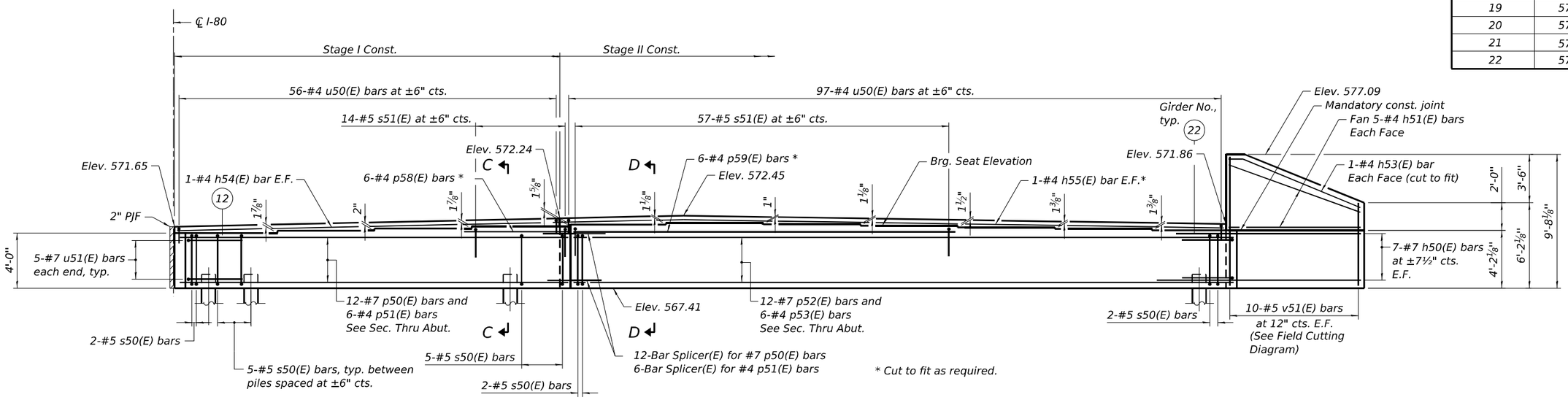

ELEVATION

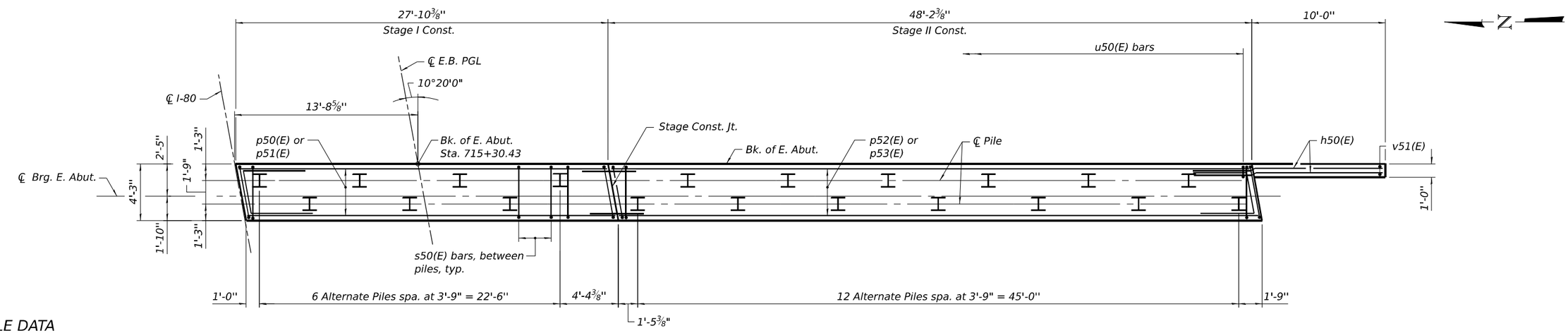

PLAN - PILE CAP

PILE DATA

Type: HP 12x53 with pile shoes
Nominal Required Bearing: 418 kips
Factored Resistance Available: 230 kips
Est. Length: 59'
No. Production Piles: 19
No. Test Piles: 1

Notes:

1. For Section C-C and D-D see Sheet S-45.
2. For Plan dimensions, see Sheet S-44.
3. Pour steps monothically with cap.

FOR INFORMATION ONLY

MODEL: SHEET
FILE NAME: C:\TRANSYSTEMS\PW_LOCAL\TRANSYSTEMS-PW-01\D0136620\80C53_I80_0990902_0903-62F94-070-EABUTEB.DGN

HNTB

USER NAME =	DESIGNED - SH	REVISED -	
	CHECKED - APC	REVISED -	
PLOT SCALE =	DRAWN - LK	REVISED -	
PLOT DATE =	CHECKED - SH	REVISED -	

STATE OF ILLINOIS
DEPARTMENT OF TRANSPORTATION

EAST ABUTMENT EB
STRUCTURE NO. 099-0902 (EB)

SHEET S-42 OF S-51 SHEETS

F.A.I. RTE.	SECTION	COUNTY	TOTAL SHEETS	SHEET NO.
80	2025-21113-B	WILL	53	44
		CONTRACT NO. 80C53		
	ILLINOIS	FED. AID PROJECT		

10-28-2025, 10:40:22

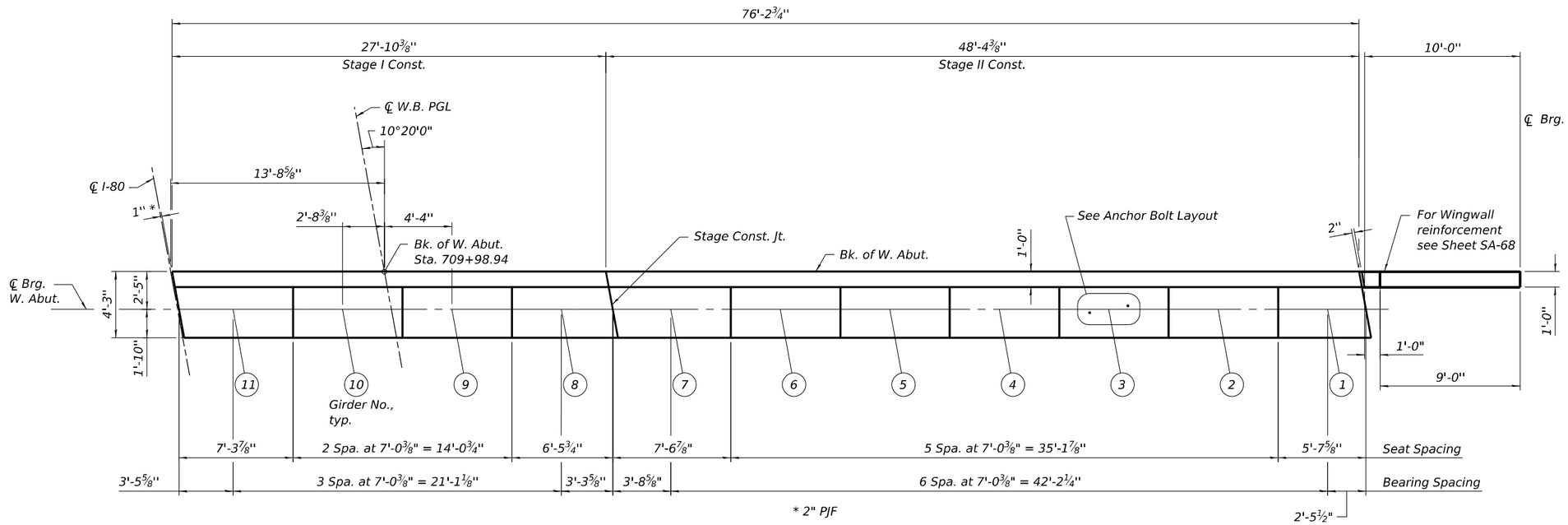

TOP PLAN - WEST ABUTMENT

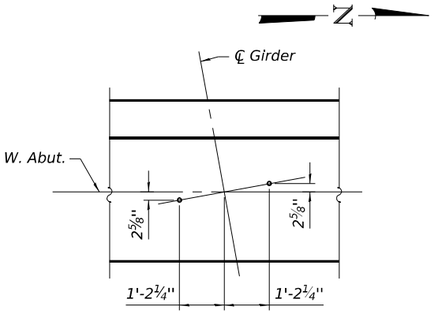

ANCHOR BOLT LAYOUT WEST ABUTMENT

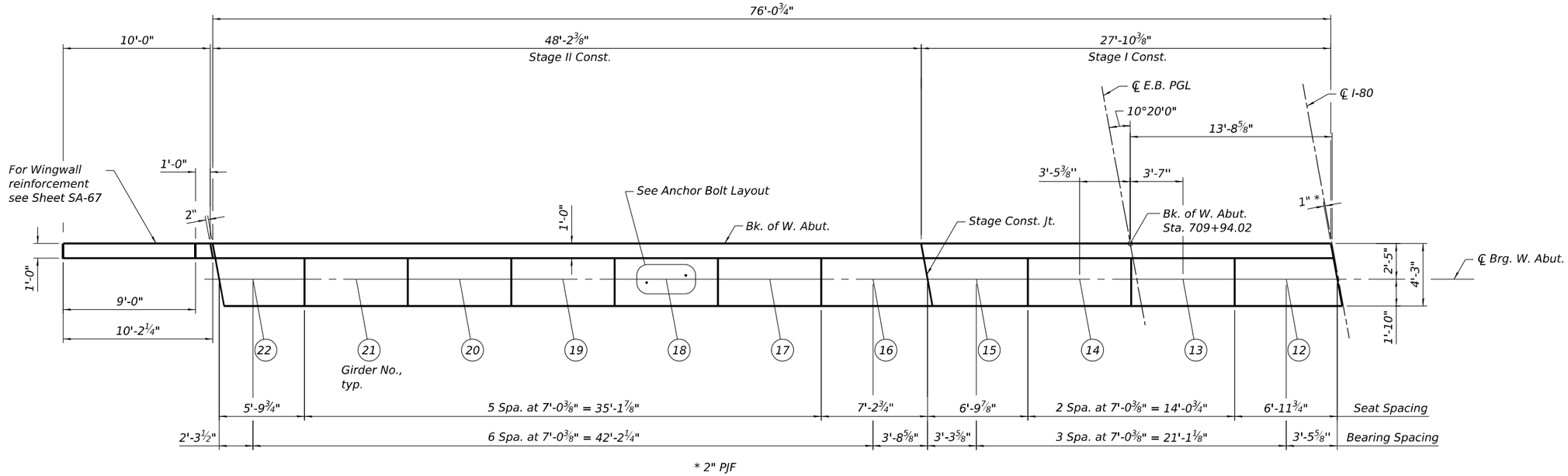

TOP PLAN - WEST ABUTMENT

FOR INFORMATION ONLY

MODEL: SHEET
FILE NAME: C:\TRANSYSTEMS\PW_LOCAL\TRANSYSTEMS-PW-01\D0136620\80C53_I80_0990902_0903-62F94-071-ABUTDET1.DGN

10-29-2025, 12:36:37

HNTB

USER NAME =	DESIGNED - SH	REVISED -	
	CHECKED - APC	REVISED -	
PLOT SCALE =	DRAWN - LK	REVISED -	
PLOT DATE =	CHECKED - SH	REVISED -	

STATE OF ILLINOIS
DEPARTMENT OF TRANSPORTATION

ABUTMENT DETAILS 1
STRUCTURE NOS. 099-0902 (EB) & 099-0903 (WB)

SHEET S-43 OF S-51 SHEETS

F.A.I. RTE.	SECTION	COUNTY	TOTAL SHEETS	SHEET NO.
80	2025-21113-B	WILL	53	45

CONTRACT NO. 80C53

ILLINOIS FED. AID PROJECT

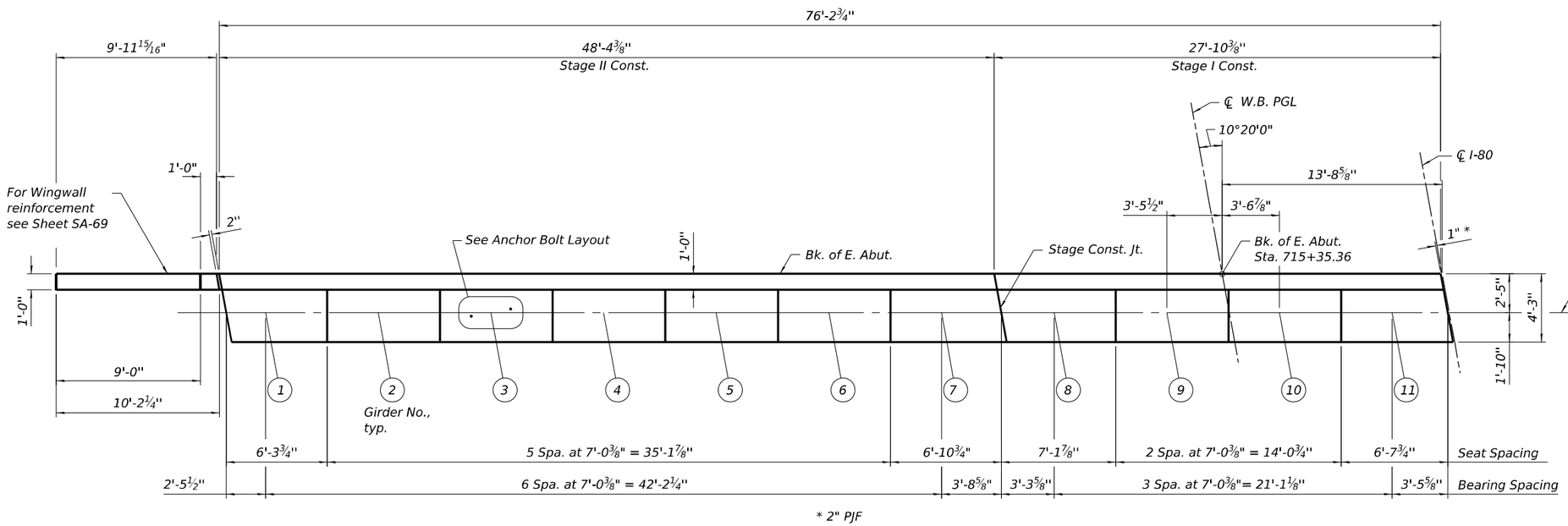

TOP PLAN - EAST ABUTMENT

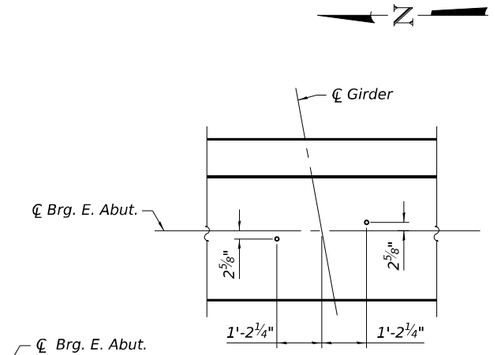

ANCHOR BOLT LAYOUT EAST ABUTMENT

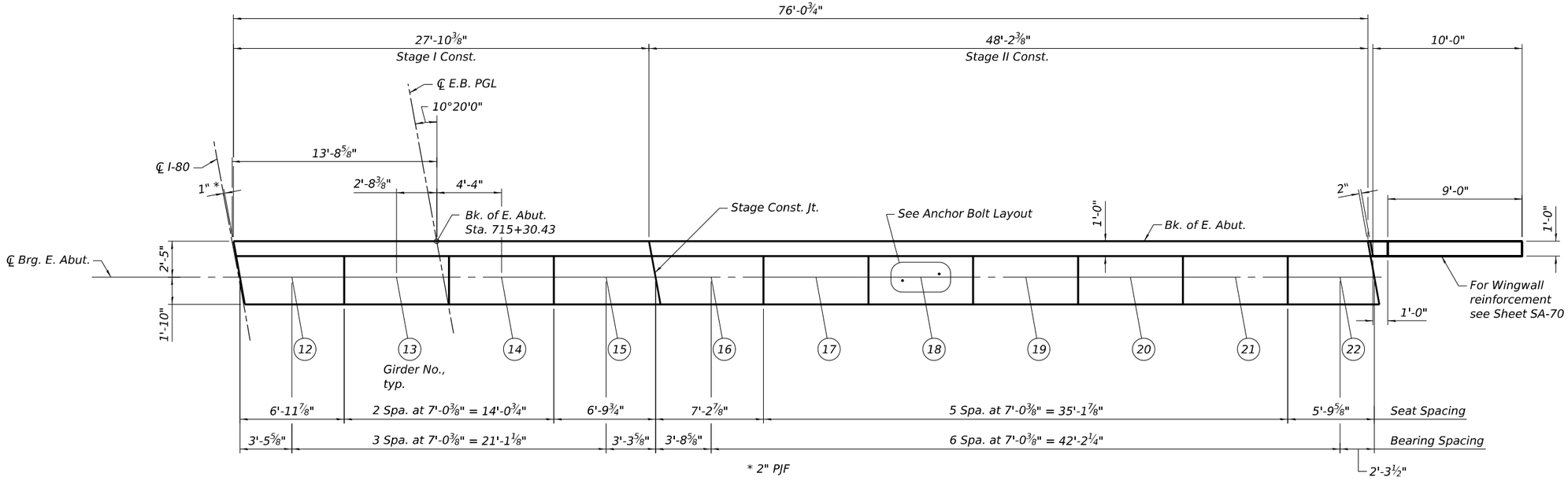

TOP PLAN - EAST ABUTMENT

FOR INFORMATION ONLY

MODEL: SHEET
FILE NAME: C:\TRANSYSTEMS\PW_LOCAL\TRANSYSTEMS-PW-01\D0136620\80C53_I80_0990902_0903-62F94-072-ABUTDET2.DGN
10-29-2025, 12:37:54

HNTB

USER NAME =	DESIGNED - SH	REVISED -	
	CHECKED - APC	REVISED -	
PLOT SCALE =	DRAWN - LK	REVISED -	
PLOT DATE =	CHECKED - SH	REVISED -	

STATE OF ILLINOIS
DEPARTMENT OF TRANSPORTATION

ABUTMENT DETAILS 2
STRUCTURE NOS. 099-0902 (EB) & 099-0903 (WB)

SHEET S-44 OF S-51 SHEETS

F.A.I. RTE.	SECTION	COUNTY	TOTAL SHEETS	SHEET NO.
80	2025-21113-B	WILL	53	46
		CONTRACT NO. 80C53		
	ILLINOIS	FED. AID PROJECT		

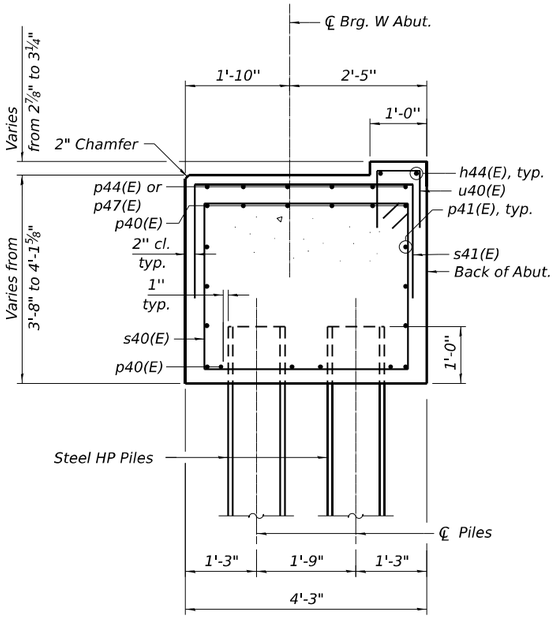

SECTION A-A

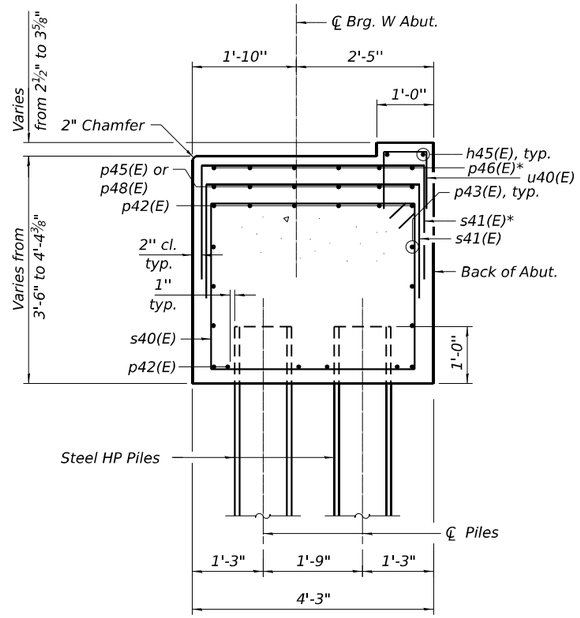

SECTION B-B

* for West Abutment WB only

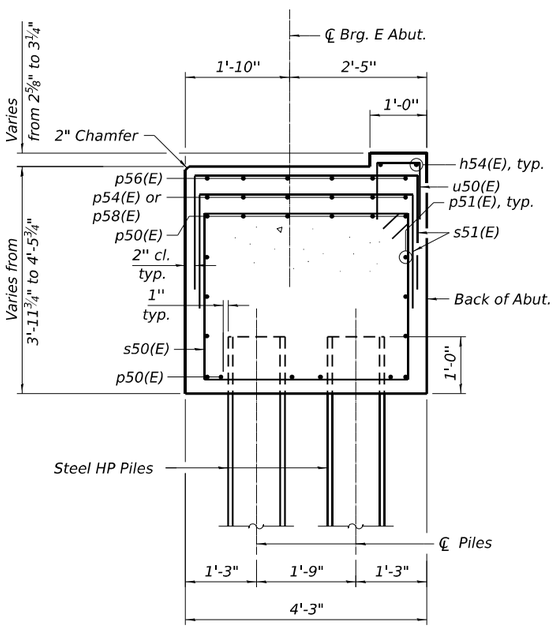

SECTION C-C

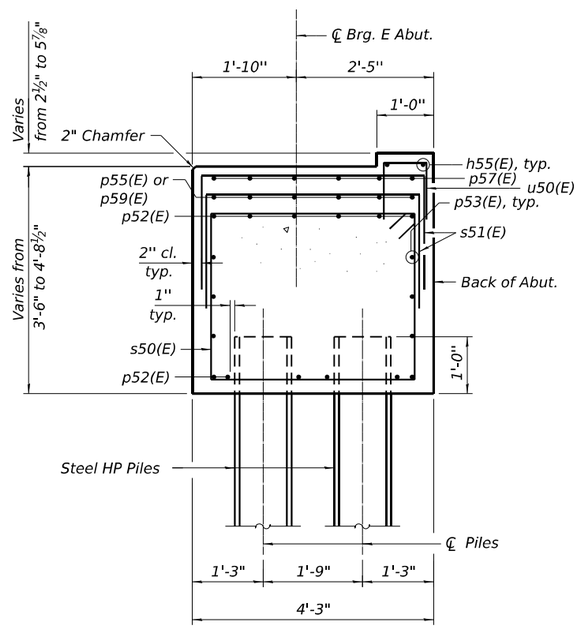

SECTION D-D

FOR INFORMATION ONLY

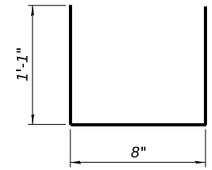

BAR u40(E) & u50(E)

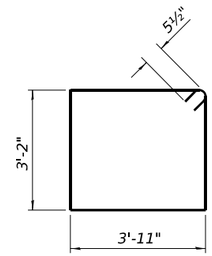

BARS s40(E) & s50(E)

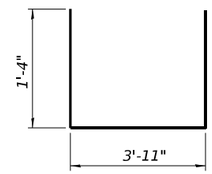

BAR s41(E) & s51(E)

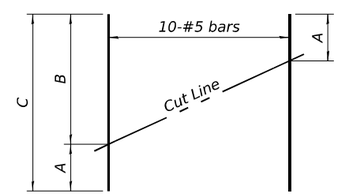

BAR v40(E), v41(E), v50(E) & v51(E)

FIELD CUTTING DIAGRAM

Order bars full length. Cut as shown and use remainder of bars in opposite face.

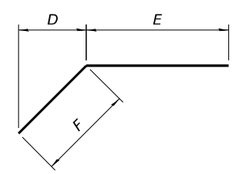

BAR h42(E), h43(E), h52(E) & h53(E)

WEST ABUTMENT BILL OF MATERIAL

Bar	No.	Size	Length	Shape
h40(E)	28	#7	13'-4"	
h41(E)	20	#4	9'-8"	
h42(E)	2	#4	10'-4"	
h43(E)	2	#4	10'-4"	
h44(E)	4	#4	27'-6"	
h45(E)	4	#4	48'-0"	
p40(E)	24	#7	27'-6"	
p41(E)	12	#4	27'-6"	
p42(E)	24	#7	48'-0"	
p43(E)	12	#4	48'-0"	
p44(E)	6	#4	6'-2"	
p45(E)	6	#4	42'-5"	
p46(E)	6	#4	21'-4"	
p47(E)	6	#4	6'-6"	
p48(E)	6	#4	28'-0"	
s40(E)	200	#5	15'-1"	
s41(E)	215	#5	6'-7"	
u40(E)	306	#4	2'-10"	
u41(E)	20	#7	12'-6"	
v40(E)	10	#5	14'-1"	
v41(E)	10	#5	13'-10"	
Concrete Structures			Cu. Yd.	99.5
Reinforcement Bars, Epoxy Coated			Pound	11,860
Furnishing Steel Piles, HP12x53			Foot	2,242
Driving Piles			Foot	2,242
Test Pile Steel HP12x53			Each	2
Pile Shoes			Each	40

For details of Bar Splicers, see sheet SA-92.
For details of piles, see sheet SA-91.

EAST ABUTMENT BILL OF MATERIAL

Bar	No.	Size	Length	Shape
h50(E)	28	#7	13'-4"	
h51(E)	20	#4	9'-8"	
h52(E)	2	#4	10'-4"	
h53(E)	2	#4	10'-3"	
h54(E)	4	#4	27'-6"	
h55(E)	4	#4	48'-0"	
p50(E)	24	#7	27'-6"	
p51(E)	12	#4	27'-6"	
p52(E)	24	#7	48'-0"	
p53(E)	12	#4	48'-0"	
p54(E)	6	#4	27'-6"	
p55(E)	6	#4	41'-9"	
p56(E)	6	#4	6'-10"	
p57(E)	6	#4	20'-8"	
p58(E)	6	#4	6'-6"	
p59(E)	6	#4	28'-0"	
s50(E)	200	#5	15'-1"	
s51(E)	271	#5	6'-7"	
u50(E)	306	#4	2'-10"	
u51(E)	20	#7	12'-6"	
v50(E)	10	#5	14'-0"	
v51(E)	10	#5	15'-2"	
Concrete Structures			Cu. Yd.	107.1
Reinforcement Bars, Epoxy Coated			Pound	12,370
Furnishing Steel Piles, HP12x53			Foot	2,280
Driving Piles			Foot	2,280
Test Pile Steel HP12x53			Each	2
Pile Shoes			Each	40

A, B & C DIMENSIONS

Bar	A	B	C
v40(E)	5'-2"	8'-11"	14'-1"
v41(E)	5'-2"	8'-8"	13'-10"
v50(E)	5'-2"	8'-10"	14'-0"
v51(E)	5'-10"	9'-4"	15'-2"

D, E & F DIMENSIONS

Bar	D	E	F
h42(E)	8'-8"	1'-0"	9'-4"
h43(E)	8'-10"	9"	9'-7"
h52(E)	8'-8"	11"	9'-5"
h53(E)	8'-6"	1'-1"	9'-2"

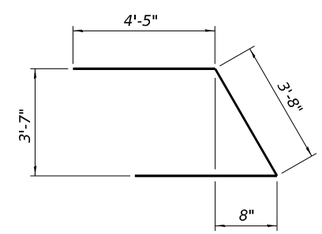

BAR u41(E) & u51(E)

Notes:
1. Space reinforcement in pile cap to miss piles.

MODEL: SHEET
FILE NAME: C:\TRANSYSTEMS\PW_LOCAL\TRANSYSTEMS-PW-01\D0136620\80C53_I80_0990902_0903-62f94-073-ABUTDET3.DGN
10-28-2025, 10:40:30

HNTB

USER NAME =	DESIGNED - SH	REVISED -	
	CHECKED - SH	REVISED -	
PLOT SCALE =	DRAWN - LK	REVISED -	
PLOT DATE =	CHECKED - APC	REVISED -	

STATE OF ILLINOIS
DEPARTMENT OF TRANSPORTATION

ABUTMENT DETAILS 3
STRUCTURE NOS. 099-0902 (EB) & 099-0903 (WB)
SHEET S-45 OF S-51 SHEETS

F.A.I. RTE.	SECTION	COUNTY	TOTAL SHEETS	SHEET NO.
80	2025-21113-B	WILL	53	47
		CONTRACT NO. 80C53		
	ILLINOIS	FED. AID PROJECT		

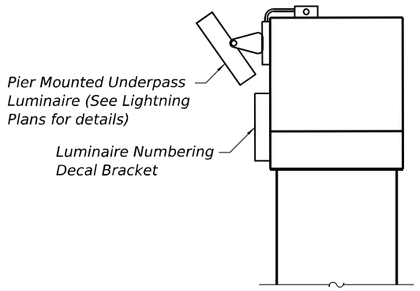

LIGHTING DETAIL

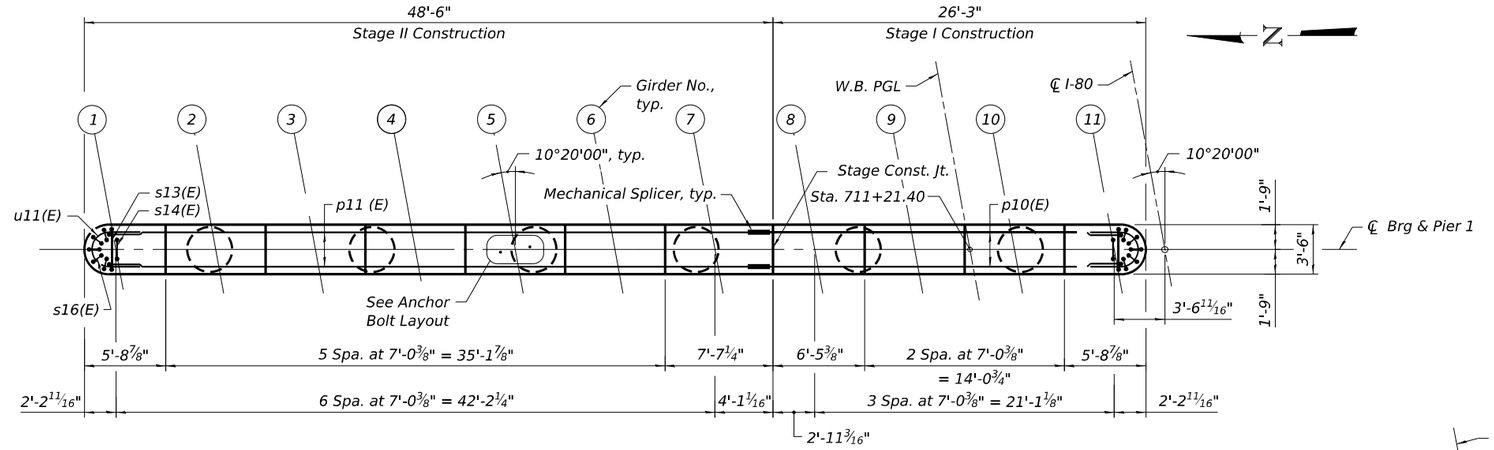

TOP PLAN

BRG. SEAT ELEVATIONS

Girder	Elev.
1	573.08
2	573.45
3	573.59
4	573.71
5	573.82
6	573.92
7	573.83
8	573.71
9	573.56
10	573.42
11	573.28

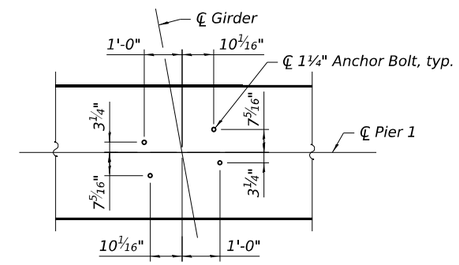

ANCHOR BOLT LAYOUT

1. 4-#6 h12(E) bars E.F. Bend in field as req'd.
2. 4-Bar Splicers for #6 h12(E) bars, E.F.
3. 4-#6 h13(E) bars E.F. Bend in field as req'd.
4. 6-#5 u11(E) bars Each End

A. 8-#6 h11(E) bars at 12" max. cts. E.F.

B. 8-#6 h10(E) bars at 12" max. cts. E.F.

C. 29-#6 s11(E) bars at 6" max. cts. Top of Crashwall

Notes:
1. Space reinforcement in cap to miss anchor bolts.
2. Pour steps monolithically with cap.

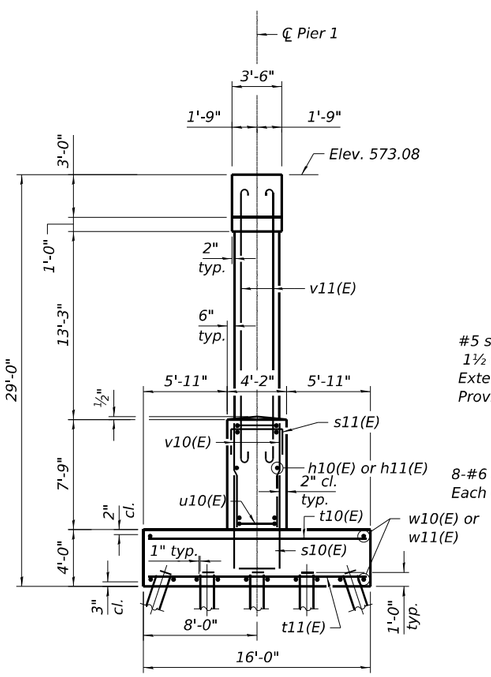

END VIEW

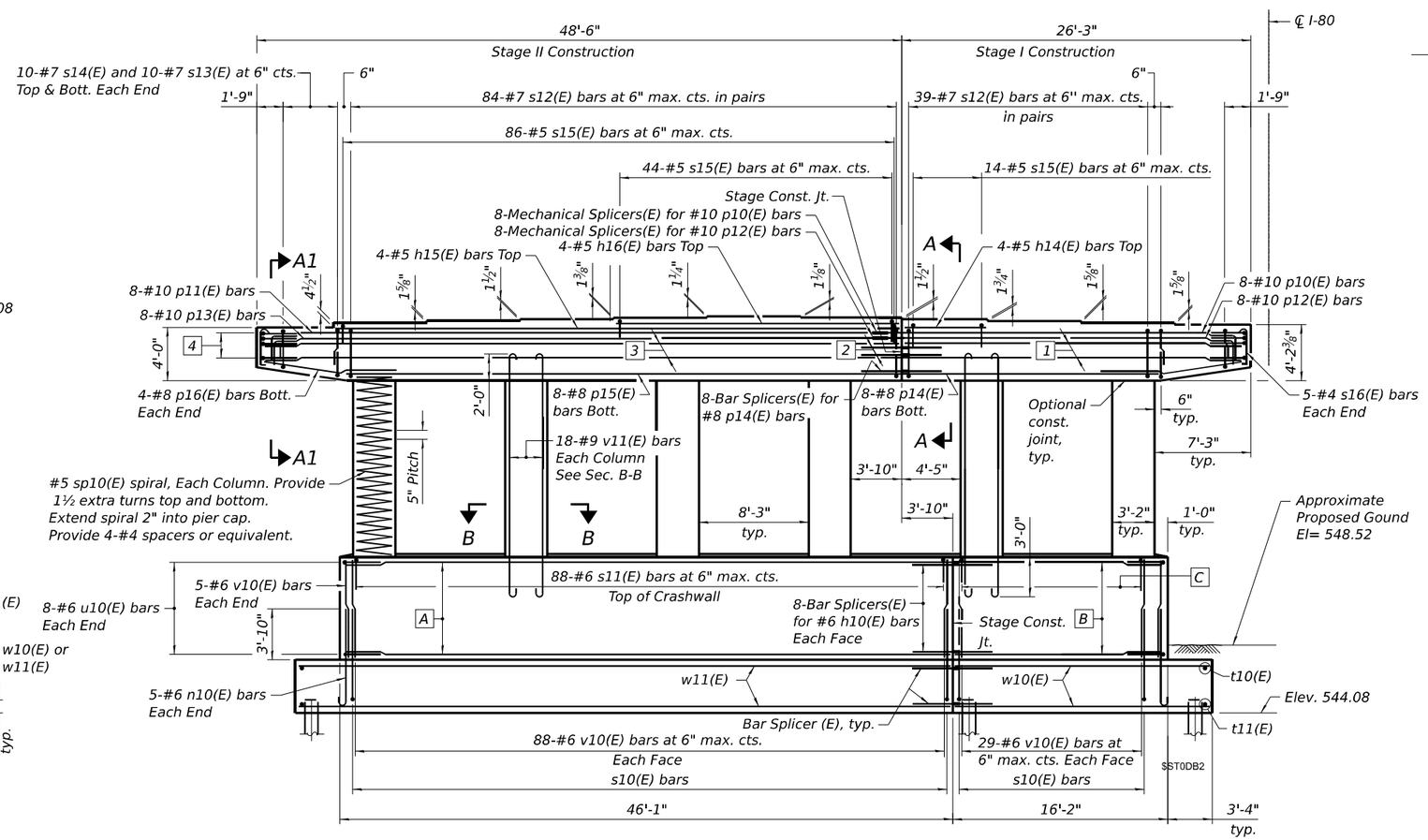

ELEVATION - PIER 1

Looking East

FOR INFORMATION ONLY

MODEL: SHEET
FILE NAME: C:\TRANSYSTEMS\PW_LOCAL\TRANSYSTEMS-PW-01\D0136620\80C53_I80_0990902_0903-62F94-079-PIER1WB1 (1).DGN

HNTB

USER NAME =	DESIGNED - SH	REVISED -	
	CHECKED - APC	REVISED -	
PLOT SCALE =	DRAWN - LK	REVISED -	
PLOT DATE =	CHECKED - SH	REVISED -	

STATE OF ILLINOIS
DEPARTMENT OF TRANSPORTATION

PIER 1 DETAILS 1 WB
STRUCTURE NO. 099-0903 (WB)

SHEET S-46 OF S-51 SHEETS

F.A.I. RTE.	SECTION	COUNTY	TOTAL SHEETS	SHEET NO.
80	2025-21113-B	WILL	53	48

CONTRACT NO. 80C53

ILLINOIS | FED. AID PROJECT

10-28-2025, 10:40:33

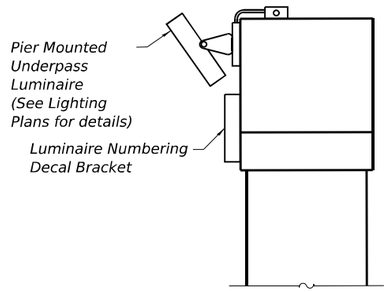

LIGHTING DETAIL

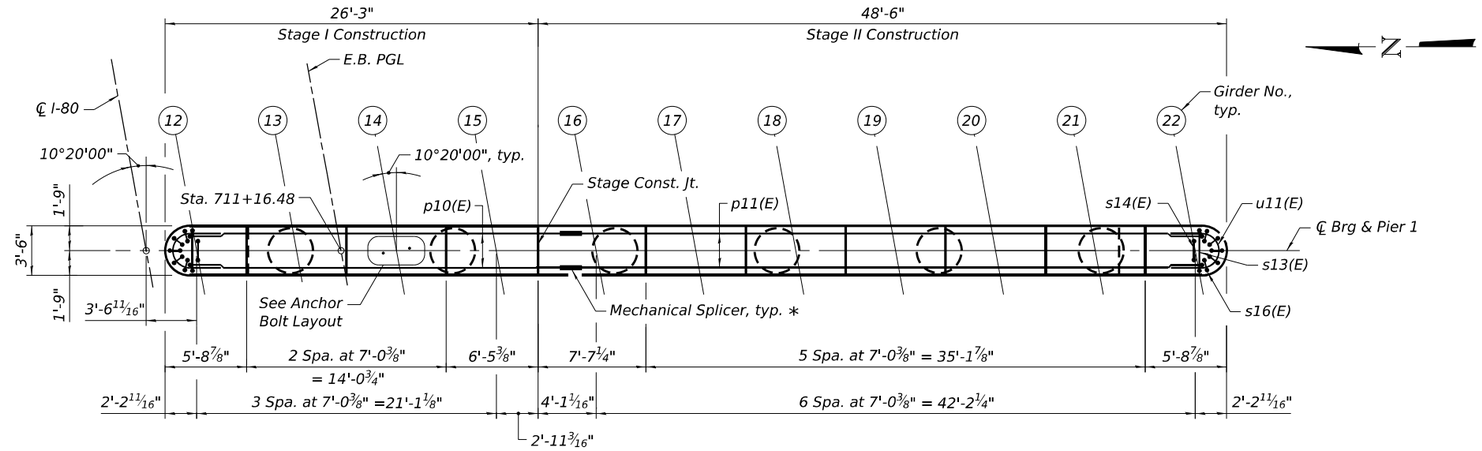

TOP PLAN

BRG. SEAT ELEVATIONS

Girder	Elev.
12	573.27
13	573.40
14	573.53
15	573.66
16	573.77
17	573.85
18	573.74
19	573.61
20	573.47
21	573.32
22	573.17

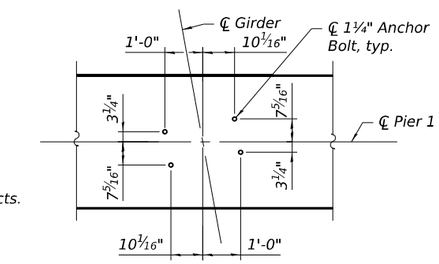

ANCHOR BOLT LAYOUT

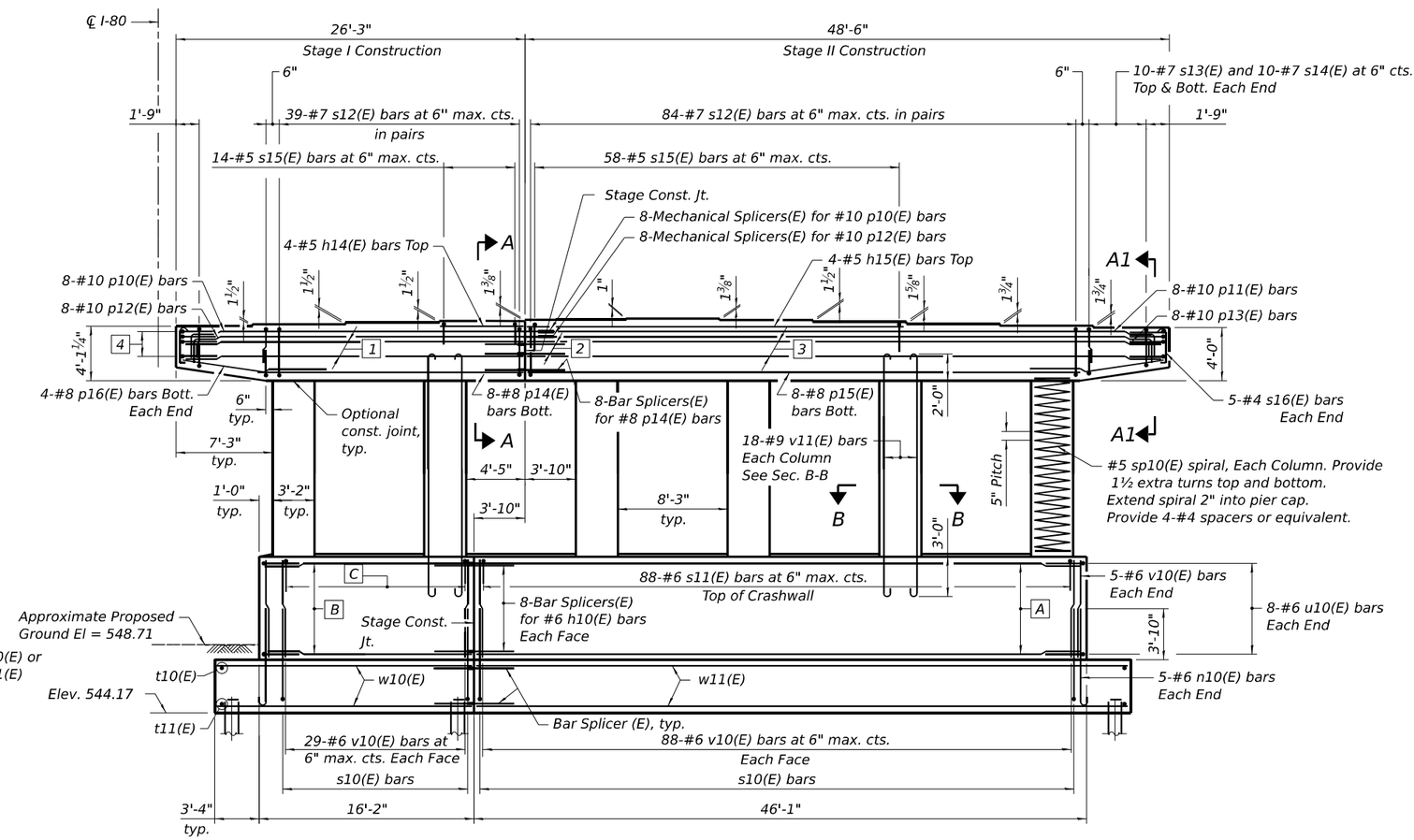

ELEVATION - PIER 1

Looking East

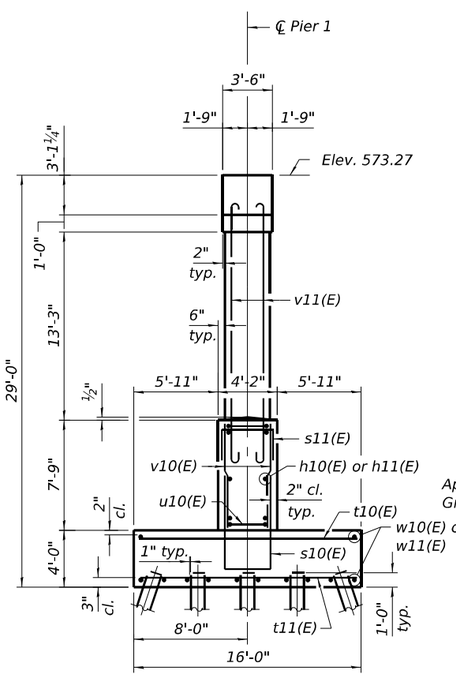

END VIEW

1	4-#6 h12(E) bars E.F. Bend in field as req'd.
2	4-Bar Splicers for #6 h12(E) bars, E.F.
3	4-#6 h13(E) bars E.F. Bend in field as req'd.
4	6-#5 u11(E) bars Each End
A	8-#6 h11(E) bars at 12" max. cts. E.F.
B	8-#6 h10(E) bars at 12" max. cts. E.F.
C	29-#6 s11(E) bars at 6" max. cts. Top of Crashwall

Notes:

1. Space reinforcement in cap to miss anchor bolts.
2. Pour steps monolithically with cap.

* The longitudinal bars in the pier cap are detailed with a 1 foot extension length beyond the stage construction joint to accommodate the mechanical couplers. Contractor shall adjust the extension length based on the selected mechanical splicer assembly.

FOR INFORMATION ONLY

MODEL: SHEET
FILE NAME: C:\TRANSYSTEMS\PW_LOCAL\TRANSYSTEMS-PW-01\D0136620\80C53_I80_0990902_0903-62F94-081-PIER1EB1.DGN

HNTB

USER NAME =	DESIGNED - SH	REVISED -	
	CHECKED - APC	REVISED -	
PLOT SCALE =	DRAWN - LK	REVISED -	
PLOT DATE =	CHECKED - SH	REVISED -	

STATE OF ILLINOIS
DEPARTMENT OF TRANSPORTATION

PIER 1 DETAILS 1 EB
STRUCTURE NO. 099-0902 (EB)

SHEET S-47 OF S-51 SHEETS

F.A.I. RTE.	SECTION	COUNTY	TOTAL SHEETS	SHEET NO.
80	2025-21113-B	WILL	53	49
		CONTRACT NO. 80C53		
		ILLINOIS	FED. AID PROJECT	

10-28-2025, 10:40:37

BRG. SEAT ELEVATIONS

Girder	Elev.
1	573.71
2	574.10
3	574.24
4	574.42
5	574.54
6	574.65
7	574.56
8	574.46
9	574.32
10	574.19
11	574.06

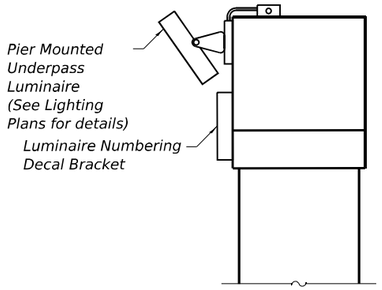

LIGHTING ATTACHMENT

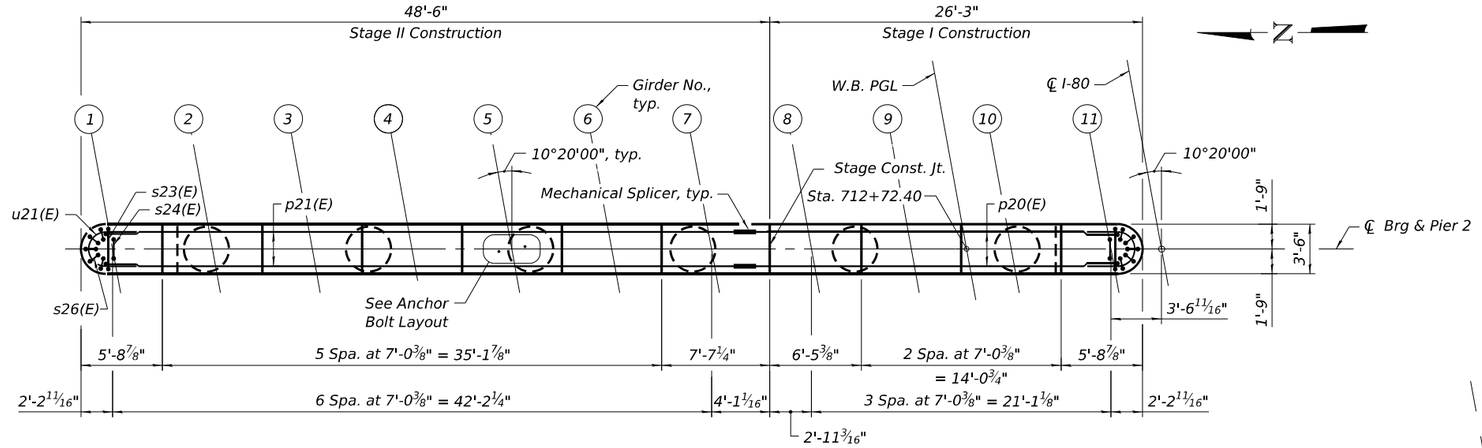

TOP PLAN

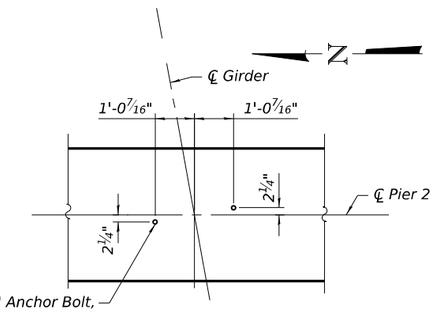

ANCHOR BOLT LAYOUT

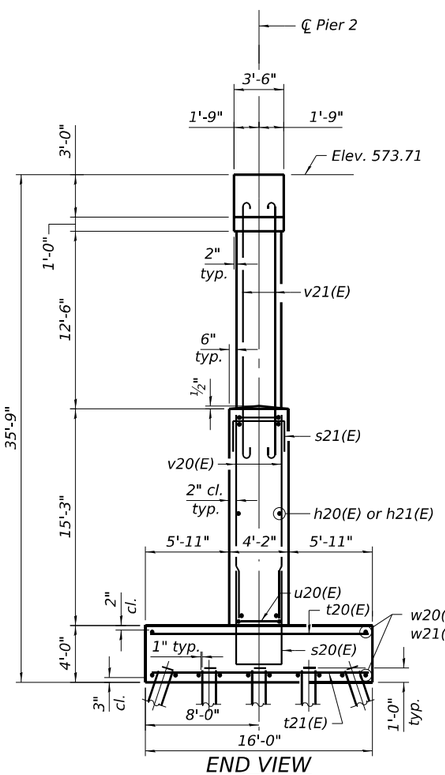

END VIEW

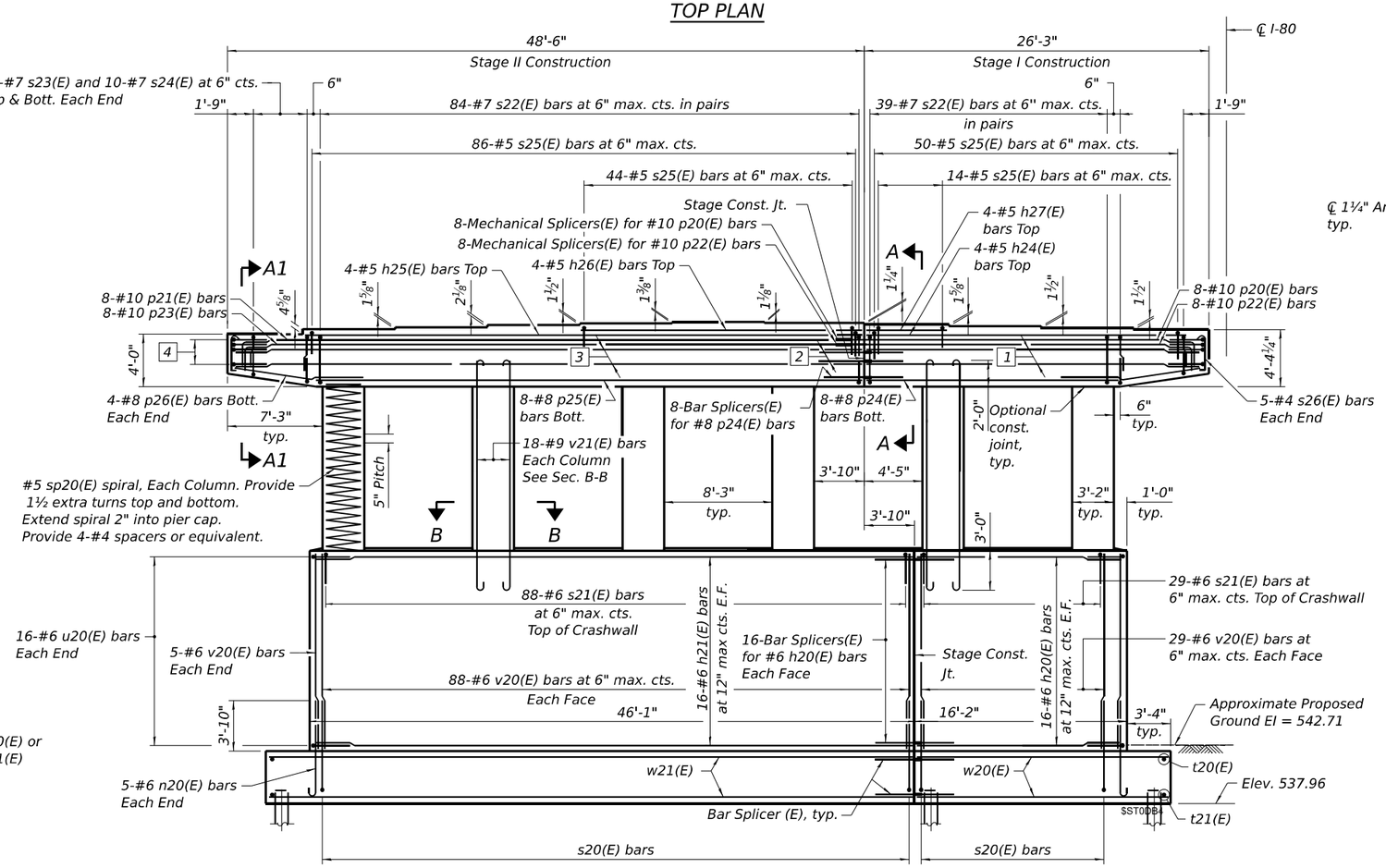

ELEVATION - PIER 2
Looking East

1. 4-#6 h22(E) bars E.F. Bend in field as req'd.
2. 4-Bar Splicers for #6 h22(E) bars, E.F.
3. 4-#6 h23(E) bars E.F. Bend in field as req'd.
4. 6-#5 u21(E) bars Each End

Notes:

1. Space reinforcement in cap to miss anchor bolts.
2. Pour steps monolithically with cap.

FOR INFORMATION ONLY

MODEL: SHEET
FILE NAME: C:\TRANSYSTEMS\PW_LOCAL\TRANSYSTEMS-PW-01\D0136620\80C53_I80_0990902_0903-62F94-083-PIER2WB1.DGN

10-28-2025, 10:40:39

HNTB

USER NAME =	DESIGNED - SH	REVISED -	
	CHECKED - APC	REVISED -	
PLOT SCALE =	DRAWN - LK	REVISED -	
PLOT DATE =	CHECKED - SH	REVISED -	

STATE OF ILLINOIS
DEPARTMENT OF TRANSPORTATION

PIER 2 DETAILS 1 WB
STRUCTURE NO. 099-0903 (WB)
SHEET S-48 OF S-51 SHEETS

F.A.I. RTE.	SECTION	COUNTY	TOTAL SHEETS	SHEET NO.
80	2025-21113-B	WILL	53	50
		CONTRACT NO. 80C53		
		ILLINOIS	FED. AID PROJECT	

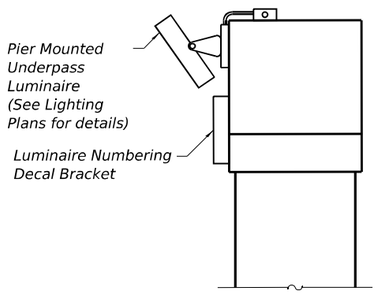

LIGHTING ATTACHMENT

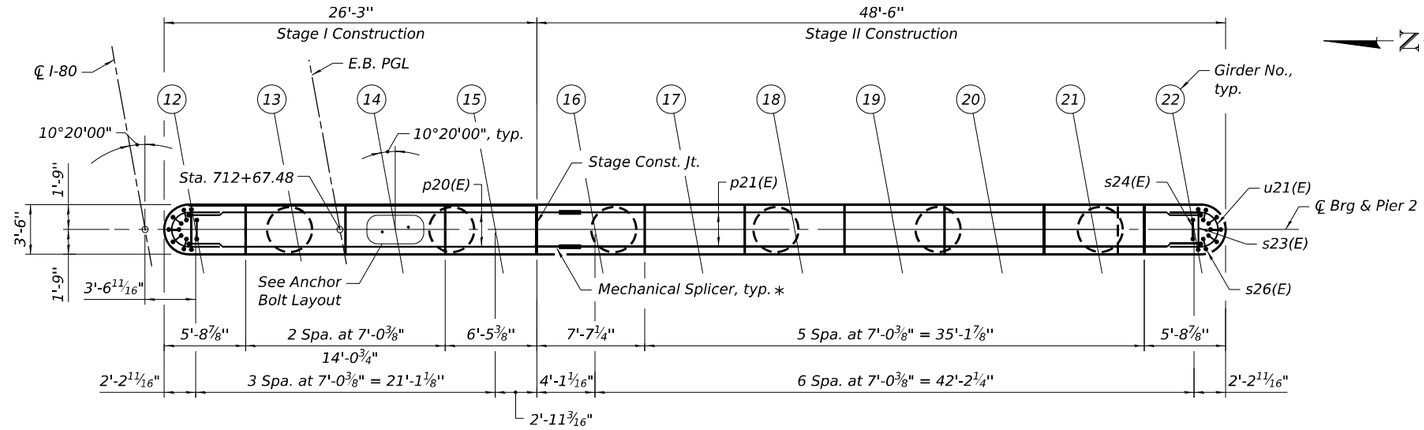

TOP PLAN

BRG. SEAT ELEVATIONS

Girder	Elev.
12	574.06
13	574.20
14	574.34
15	574.48
16	574.59
17	574.68
18	574.58
19	574.47
20	574.33
21	574.20
22	574.06

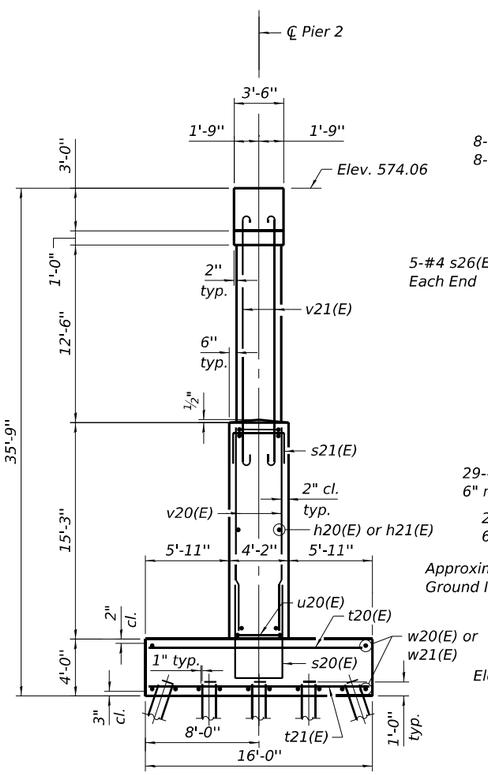

END VIEW

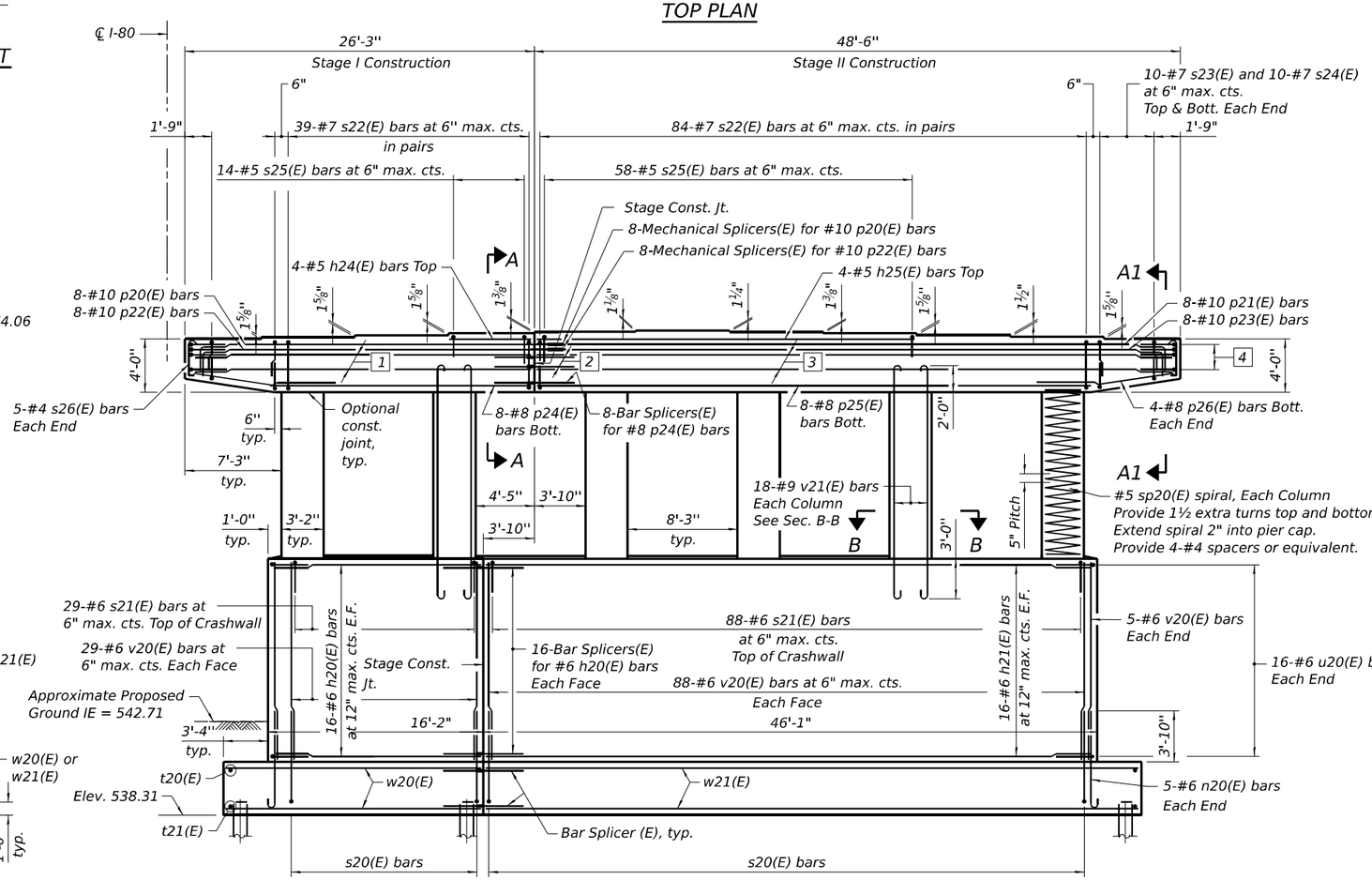

ELEVATION - PIER 2

Looking East

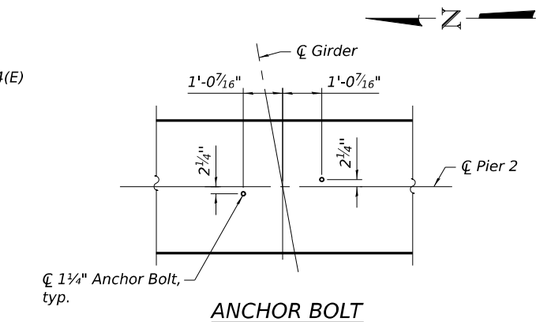

ANCHOR BOLT LAYOUT

1. 4-#6 h22(E) bars E.F. Bend in field as req'd.
2. 4-Bar Splicers for #6 h22(E) bars, E.F.
3. 4-#6 h23(E) bars E.F. Bend in field as req'd.
4. 6-#5 u21(E) bars Each End

Notes:

1. Space reinforcement in cap to miss anchor bolts.
2. Pour steps monolithically with cap.

* The longitudinal bars in the pier cap are detailed with a 1 foot extension length beyond the stage construction joint to accommodate the mechanical couplers. Contractor shall adjust the extension length based on the selected mechanical splicer assembly.

FOR INFORMATION ONLY

MODEL: SHEET
FILE NAME: C:\TRANSYSTEMS\PW_LOCAL\TRANSYSTEMS-PW-01\D0136620\80C53_I80_0990902_0903-62F94-085-PIER2EB1.DGN

10-28-2025, 10:40:42

HNTB

USER NAME =	DESIGNED - SH	REVISED -	
	CHECKED - APC	REVISED -	
PLOT SCALE =	DRAWN - LK	REVISED -	
PLOT DATE =	CHECKED - SH	REVISED -	

STATE OF ILLINOIS
DEPARTMENT OF TRANSPORTATION

PIER 2 DETAILS 1 EB
STRUCTURE NO. 099-0902 (EB)

SHEET S-49 OF S-51 SHEETS

F.A.I. RTE.	SECTION	COUNTY	TOTAL SHEETS	SHEET NO.
80	2025-21113-B	WILL	53	51
		CONTRACT NO. 80C53		
		ILLINOIS	FED. AID PROJECT	

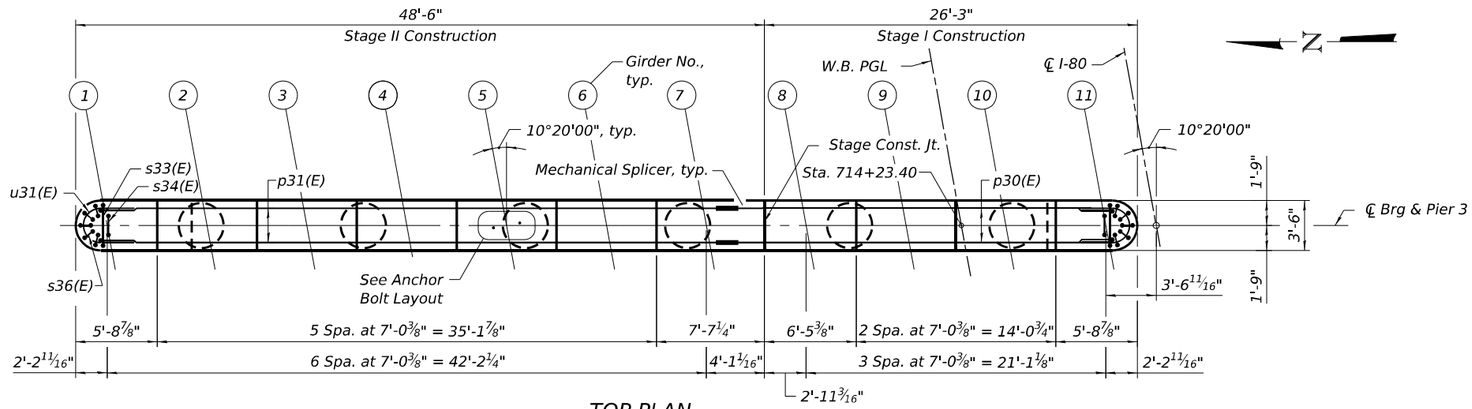

TOP PLAN

BRG. SEAT ELEVATIONS

Girder	Elev.
1	572.01
2	572.41
3	572.56
4	572.77
5	572.90
6	573.02
7	572.95
8	572.85
9	572.73
10	572.60
11	572.48

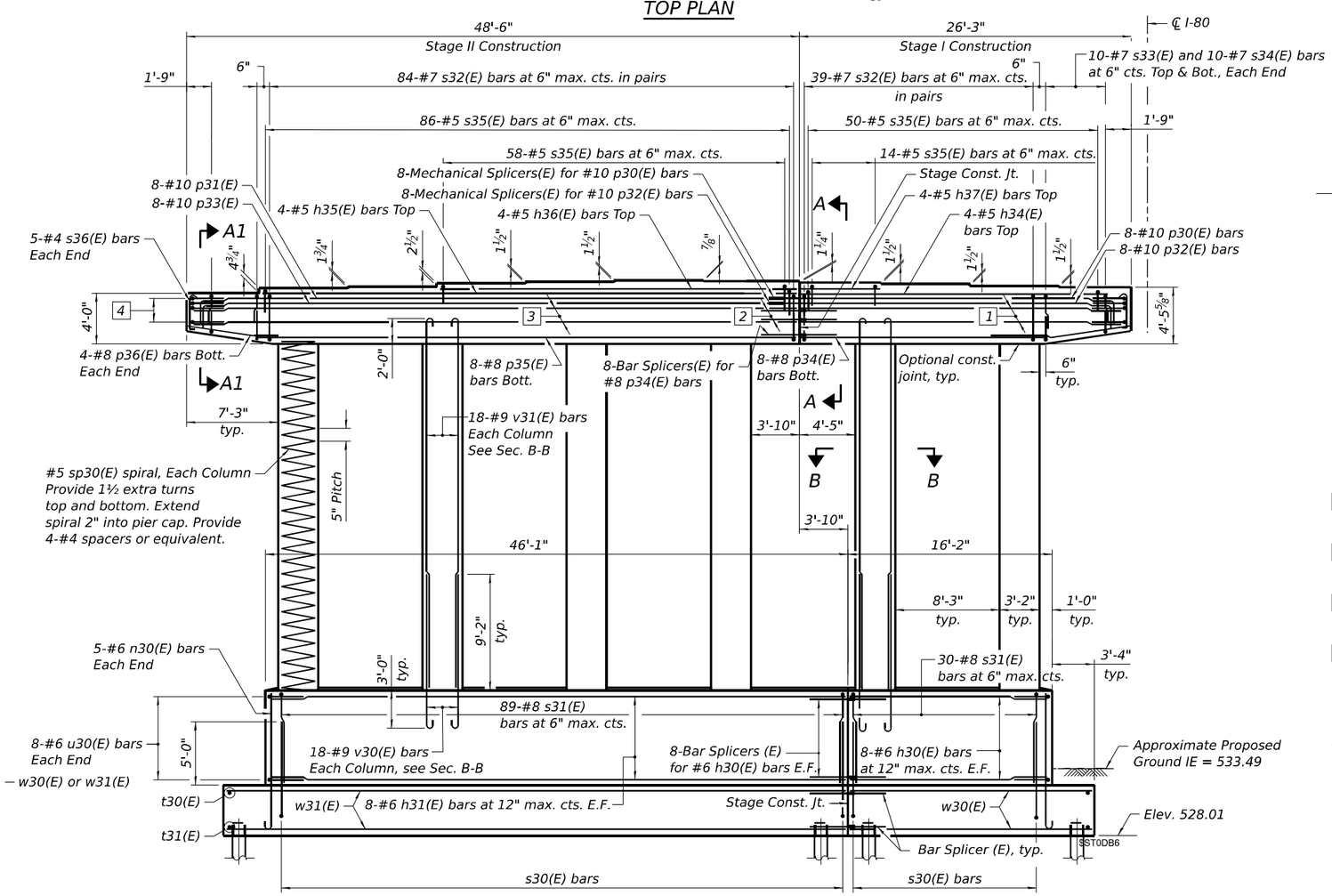

ELEVATION - PIER 3

Looking East

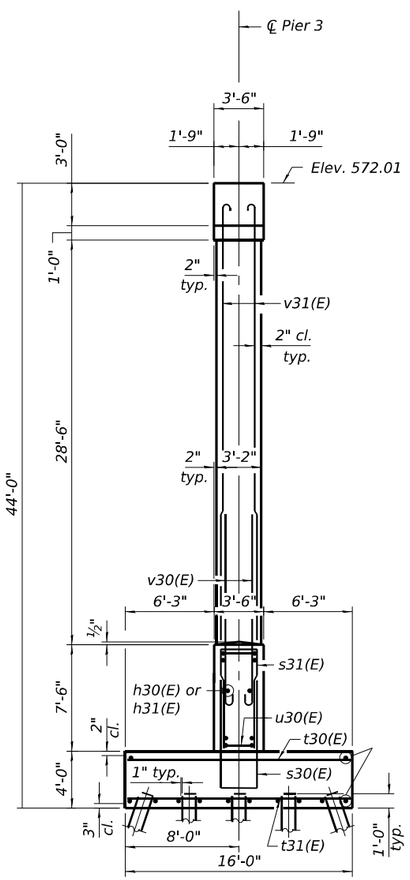

END VIEW

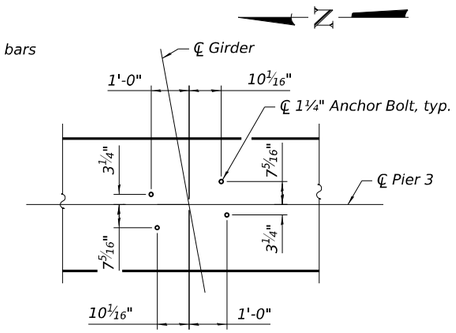

ANCHOR BOLT LAYOUT

1. 4-#6 h32(E) bars E.F. Bend in field as req'd.
2. 4-Bar Splicers for #6 h32(E) bars, E.F.
3. 4-#6 h33(E) bars E.F. Bend in field as req'd.
4. 6-#5 u31(E) bars Each End

Notes:

1. Space reinforcement in cap to miss anchor bolts.
2. Pour steps monolithically with cap.

FOR INFORMATION ONLY

MODEL: SHEET
FILE NAME: C:\TRANSYSTEMS\PW_LOCAL\TRANSYSTEMS-PW-01\00136620\80C53_I80_0990902_0903-62F94-087-PIER3WB1.DGN
10-28-2025, 10:40:45

HNTB

USER NAME =	DESIGNED - SH	REVISED -	
	CHECKED - APC	REVISED -	
PLOT SCALE =	DRAWN - LK	REVISED -	
PLOT DATE =	CHECKED - SH	REVISED -	

STATE OF ILLINOIS
DEPARTMENT OF TRANSPORTATION

PIER 3 DETAILS 1 WB
STRUCTURE NO. 099-0903 (WB)
SHEET S-50 OF S-51 SHEETS

F.A.I. RTE.	SECTION	COUNTY	TOTAL SHEETS	SHEET NO.
80	2025-21113-B	WILL	53	52
		CONTRACT NO. 80C53		
	ILLINOIS	FED. AID PROJECT		

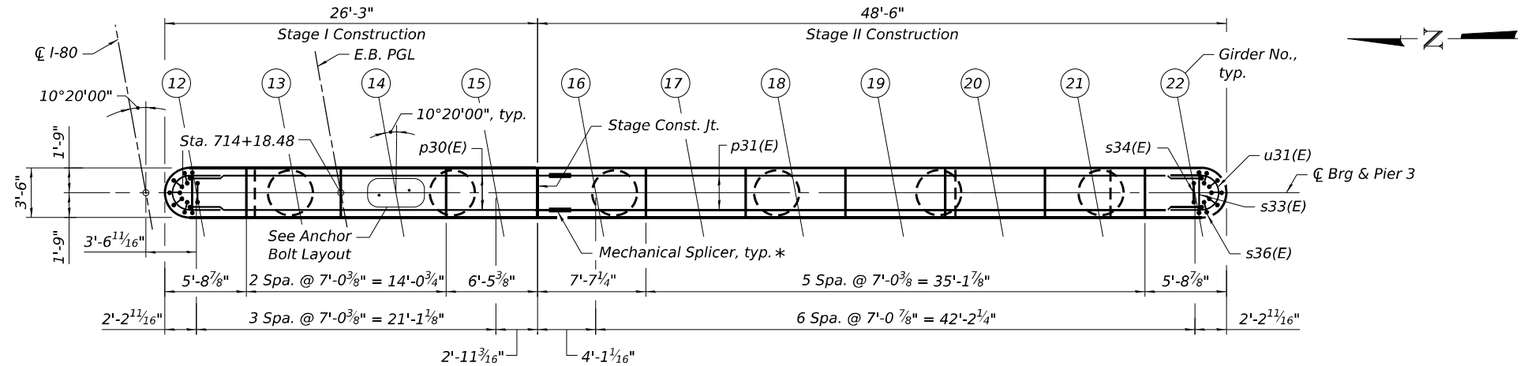

TOP PLAN

BRG. SEAT ELEVATIONS

Girder	Elev.
12	572.49
13	572.64
14	572.79
15	572.94
16	573.07
17	573.17
18	573.08
19	572.97
20	572.85
21	572.72
22	572.59

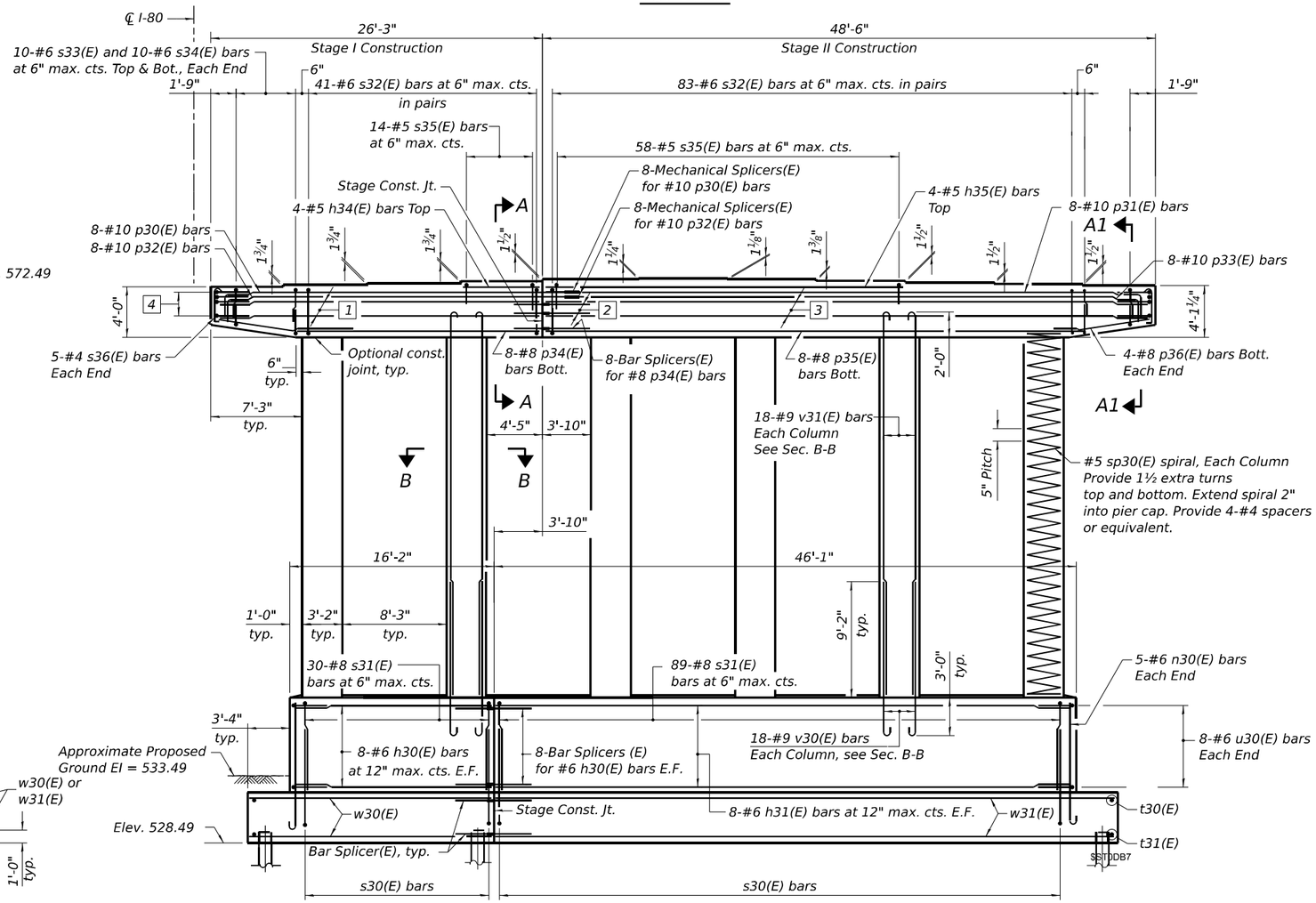

ELEVATION - PIER 3

Looking East

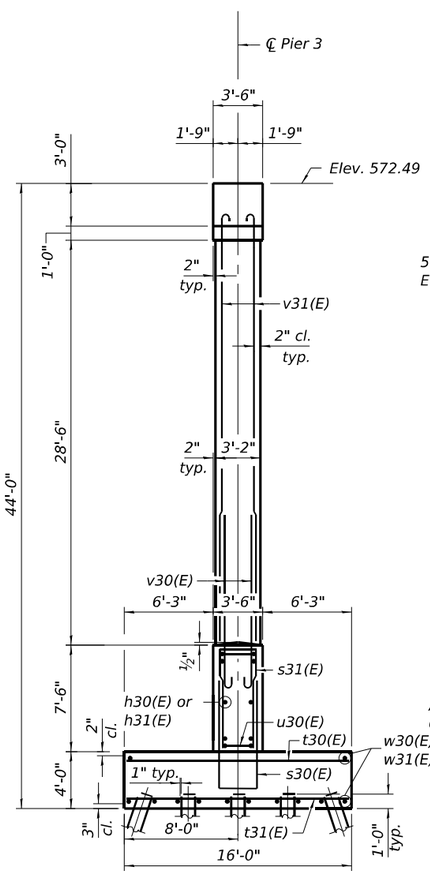

END VIEW

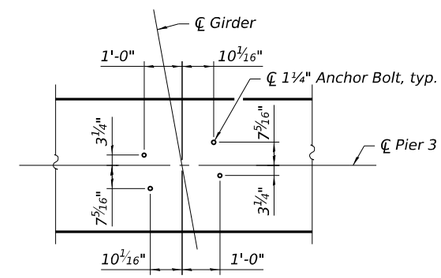

ANCHOR BOLT LAYOUT

1. 4-#6 h32(E) bars E.F. Bend in field as req'd.
2. 4-Bar Splicers for #6 h32(E) bars, E.F.
3. 4-#6 h33(E) bars E.F. Bend in field as req'd.
4. 6-#5 u31(E) bars Each End

Notes:

1. Space reinforcement in cap to miss anchor bolts.
2. Pour steps monolithically with cap.

* The longitudinal bars in the pier cap are detailed with a 1 foot extension length beyond the stage construction joint to accommodate the mechanical couplers. Contractor shall adjust the extension length based on the selected mechanical splicer assembly.

FOR INFORMATION ONLY

MODEL: SHEET
FILE NAME: C:\TRANSYSTEMS\PW_LOCAL\TRANSYSTEMS-PW-01\D0136620B0C53_J80_0990902_0003-62F94-089-PIER3EB1.DGN

10-28-2025, 10:40:47

HNTB

USER NAME =	DESIGNED - SH	REVISED -	
	CHECKED - APC	REVISED -	
PLOT SCALE =	DRAWN - LK	REVISED -	
PLOT DATE =	CHECKED - SH	REVISED -	

STATE OF ILLINOIS
DEPARTMENT OF TRANSPORTATION

PIER 3 DETAILS 1 EB
STRUCTURE NO. 099-0902 (EB)
SHEET S-51 OF S-51 SHEETS

F.A.I. RTE.	SECTION	COUNTY	TOTAL SHEETS	SHEET NO.
80	2025-21113-B	WILL	53	53
		CONTRACT NO. 80C53		
		ILLINOIS	FED. AID PROJECT	