PNT 170506
STA. 441+18.18 17.73′ RT

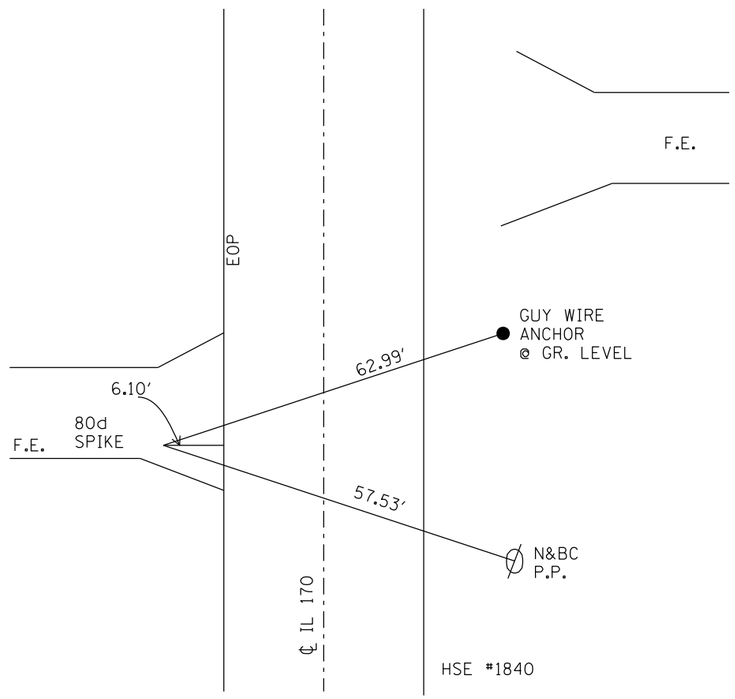

POT STA 448+00.00

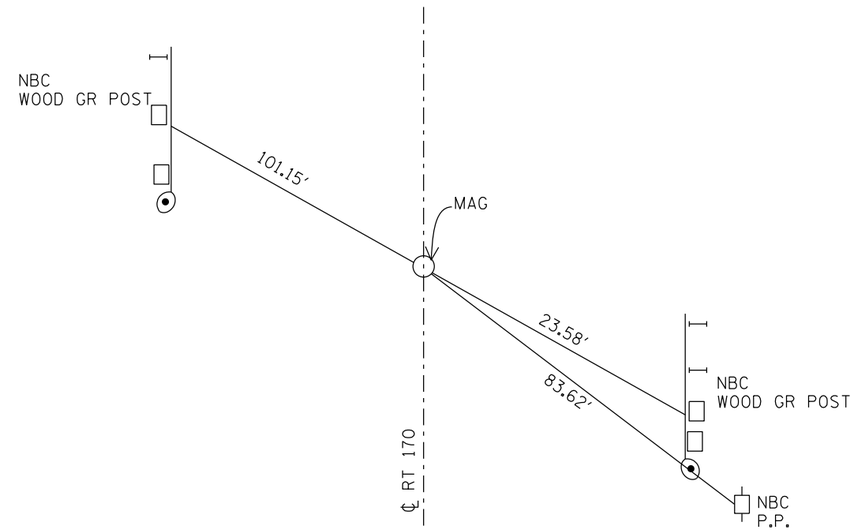

POT ℄ SN 050-0072 STA 445+59.59

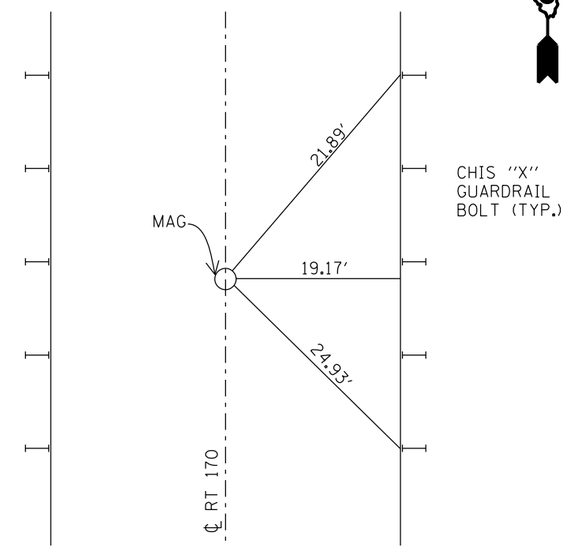

POT STA 443+00.00

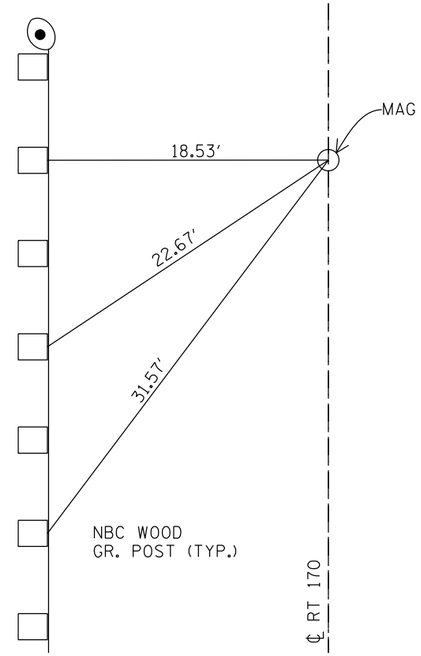

PI STA. EQ. 454+10.27 BK = 454+00.00 AH.

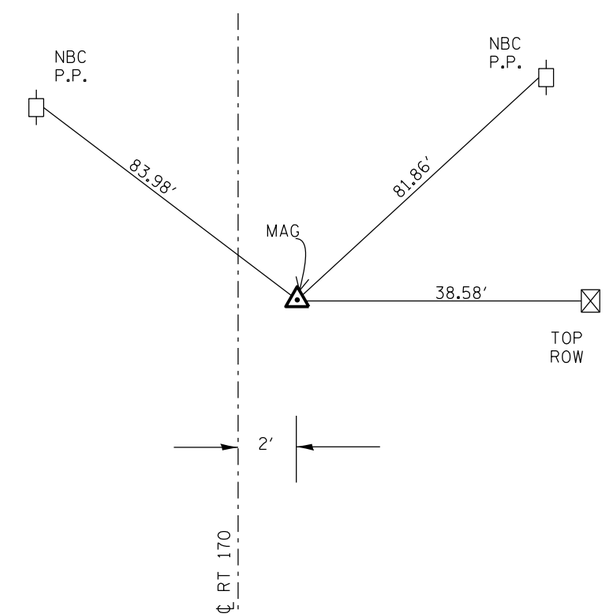

FILE NAME = $FILEL$	USER NAME = $USER$	DESIGNED - ___	REVISED - ___	STATE OF ILLINOIS DEPARTMENT OF TRANSPORTATION	TIE POINTS – EXIST. SN 050–0072	F.A.P. RTE.	SECTION	COUNTY	TOTAL SHEETS / SHEET NO.
		DRAWN - ___	REVISED - ___			786	(110)BR-1,2,3	LASALLE	69 / 14
	PLOT SCALE = $SCALE$	CHECKED - ___	REVISED - ___					CONTRACT NO. 66B19	
Default	PLOT DATE = $DATE$	DATE - ___	REVISED - ___		SCALE: ___ SHEET ___ OF ___ SHEETS STA. ___ TO STA. ___		ILLINOIS FED. AID PROJECT		