Benchmark: Chiseled "□" on NW headwall; Sta. 445+24.25, 19.98' Rt., Elev. 663.465

Existing Structure: Structure No. 050-0072 built in 1933 as Route 70A, Section 110 & 110B at Sta. 445+54 as a single span R.C. slab, closed abutment structure. 30'-9 7/8" back-to-back abutments, supported on footings with untreated timber piles. Two 96" x 67" corrugated pipe arches were installed in 2011 and encased in CLSM within the existing bridge opening. Existing structure to be removed and replaced. Traffic is to be maintained utilizing detour closing the road at this structure.

Salvage existing concrete barrier. See Field Maintenance Engineer in Gardener. (815)-942-0351

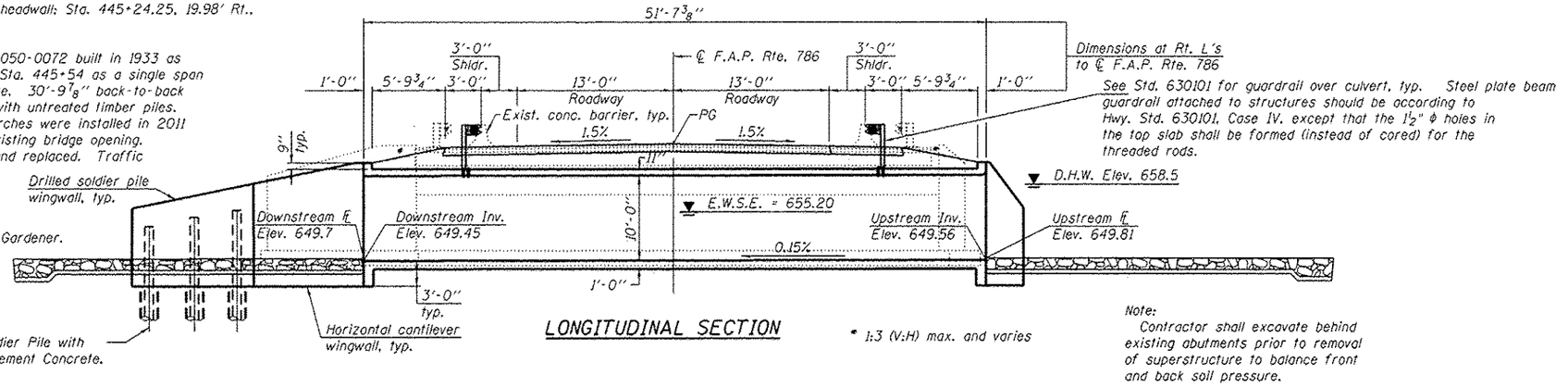

LONGITUDINAL SECTION

* 1:3 (V:H) max. and varies

Note:
Contractor shall excavate behind existing abutments prior to removal of superstructure to balance front and back soil pressure.

INDEX OF SHEETS

1 General Plan and Elevation
2 Culvert Plan
3 Culvert Sections and Elevations
4 Soldier Pile Wingwall Details
5 Rail Post Spacing and Details
6 Boring Logs

DESIGN SPECIFICATIONS

2012 AASHTO LRFD Bridge Design Specifications, 6th Edition

DESIGN STRESSES

FIELD UNITS

f'c = 3,500 psi
fy = 60,000 psi (Reinforcement)
fy = 50,000 psi (M270 Grade 50)

LOADING HL-93

Allow 50#/sq. ft. for future wearing surface

DESIGN FILL HEIGHT

Design earth cover = 2.7 ft.

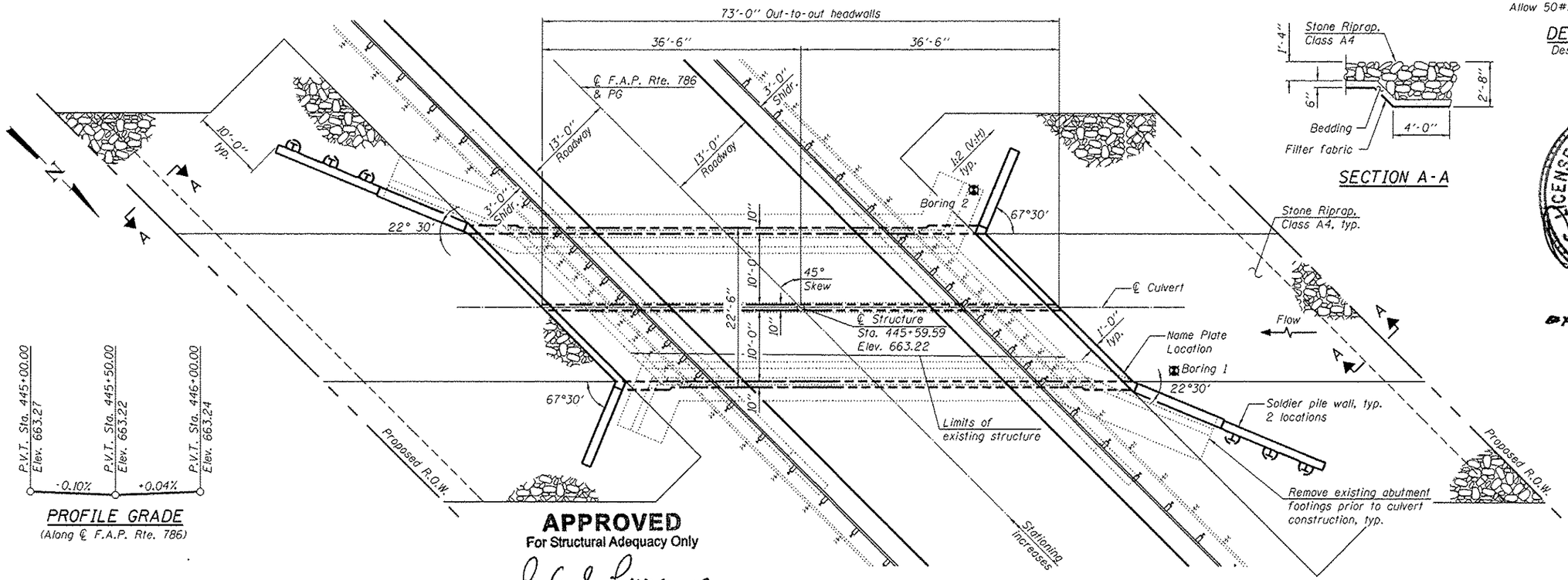

PLAN

SECTION A-A

PROFILE GRADE
(Along ℄ F.A.P. Rte. 786)

APPROVED
For Structural Adequacy Only
Engineer of Bridges & Structures

WATERWAY INFORMATION

Drainage Area = 6.66 sq. mi.
Existing Low Grade Elev. 662.98 @ Sta. 446+00
Proposed Low Grade Elev. 663.05 @ Sta. 446+00

Flood	Freq. Yr.	Q C.F.S.	Opening Sq. Ft. Exist.	Opening Sq. Ft. Prop.	Nat. H.W.E.	Head - Ft. Exist.	Head - Ft. Prop.	Headwater El. Exist.	Headwater El. Prop.
	10	512	122	159	657.5	0.0	0.0	657.5	657.5
Design	50	757	143	178	658.5	0.4	0.3	658.9	658.8
Base	100	854	147	183	658.7	0.6	0.5	659.3	659.2
Overtopping	-	-	-	-	-	-	-	-	-
Max. Calc.	500	1080	157	191	659.1	1.0	0.9	660.2	660.1

Existing 10-year velocity = 4.2 ft./sec.
Proposed 10-year velocity = 3.2 ft./sec.

DESIGN SCOUR ELEVATION TABLE

Design Scour Elevation (ft.)	Upstream	Downstream
	646.56	646.45

STATION 445+59.59
BUILT 20 BY
STATE OF ILLINOIS
F.A.P. RTE. 786 - SEC (110) BR-1
LOADING HL-93
STRUCTURE NO. 050-2057

NAME PLATE
See Std. 515001

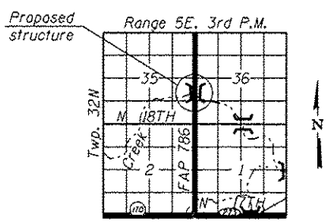

LOCATION SKETCH

GENERAL PLAN & ELEVATION
IL. RTE. 170 OVER
WAUPECAN CREEK
F.A.P. RTE. 786 - SEC. (110) BR-1
LASALLE COUNTY
STATION 445+59.59
STRUCTURE NO. 050-2057

LICENSED STRUCTURAL ENGINEER
DAVID P. YOUNGQUIST
081-004882
STATE OF ILLINOIS
expires 11-30-2014

TERRA ENGINEERING LTD.

USER NAME =	DESIGNED - OY	REVISED
	CHECKED - DB	REVISED
PLOT SCALE =	DRAWN - CM	REVISED
PLOT DATE =	CHECKED - JB	REVISED

STATE OF ILLINOIS
DEPARTMENT OF TRANSPORTATION

GENERAL PLAN AND ELEVATION
STRUCTURE NO. 050-2057
SHEET NO. 1 OF 6 SHEETS

F.A.P. RTE.	SECTION	COUNTY	TOTAL SHEETS	SHEET NO.
786	(110)BR-1	LASALLE	69	41
		CONTRACT NO. 66B19		
	ILLINOIS	FED. AID PROJECT		